AUTHENTICATED
U.S. GOVERNMENT
INFORMATION
GPO

1-10-80
Vol. 45 No. 7
Pages 2001-2306

federal register

Thursday
January 10, 1980

NOTE:
Due to a shortage of newsprint, today's **Federal Register** is printed on a higher quality paper. As supplies become available, the **Federal Register** will resume the use of newsprint.

Highlights

Cumulative List of Public Laws—The cumulative list of all public laws for the first session of the 96th Congress can be found in the Reader Aids section of the issue of Thursday, January 17, 1980.

2142 **Income Tax Treaty** Treasury announces a meeting during week of February 4, 1980, of representatives of United States and Tunisia to negotiate treaty

2142 **Income Tax Treaty** Treasury announces that representatives of the United States, Trinadad and Tobago have begun exploratory talks in respect to amending present treaty

2059 **Hazardous Waste** EPA issues notice of availability of information and requests comments by 2-11-80

2102 **Cigarette Testing Results** FTC publishes the "tar" and nicotine content of domestic cigarettes

2026 **Valuation of Plan Benefits** PBGC issues amendment to interim rules; effective 1-10-80

2023 **Public Utilities** DOE/FERC revises rules governing procedures for the collection and reporting of information associated with the cost of providing electric service; effective 2-4-80

CONTINUED INSIDE

FEDERAL REGISTER Published daily, Monday through Friday, (not published on Saturdays, Sundays, or on official holidays), by the Office of the Federal Register, National Archives and Records Service, General Services Administration, Washington, D.C. 20408, under the Federal Register Act (49 Stat. 500, as amended; 44 U.S.C. Ch. 15) and the regulations of the Administrative Committee of the Federal Register (1 CFR Ch. I). Distribution is made only by the Superintendent of Documents, U.S. Government Printing Office, Washington, D.C. 20402.

The **Federal Register** provides a uniform system for making available to the public regulations and legal notices issued by Federal agencies. These include Presidential proclamations and Executive Orders and Federal agency documents having general applicability and legal effect, documents required to be published by Act of Congress and other Federal agency documents of public interest. Documents are on file for public inspection in the Office of the Federal Register the day before they are published, unless earlier filing is requested by the issuing agency.

The **Federal Register** will be furnished by mail to subscribers, free of postage, for $5.00 per month or $50 per year, payable in advance. The charge for individual copies of 75 cents for each issue, or 75 cents for each group of pages as actually bound. Remit check or money order, made payable to the Superintendent of Documents, U.S. Government Printing Office, Washington, D.C. 20402.

There are no restrictions on the republication of material appearing in the **Federal Register.**

Area Code 202-523-5240

Highlights

2028 **Recreational Boats** DOT/CG establishes a new format for display of capacity information; effective 8-1-80

2067 **Mobile Radio Communications Systems** FCC proposes rules; comments by 3-7-80

2027 **Navigation Safety** DOT/CG issues final rule on electronic navigation equipment; effective 2-11-80

2045 **Marine Investigations and Administrative Proceedings** DOT/CG revises fees and allowances payable to witnesses appearing before; effective 2-11-80

2069 **Microwave Systems** FCC proposes rules concerning the operation of short haul, low cost, low power systems in the 22,000 to 23,600 MHz band to operational-fixed users.

2026 **Indian Housing Improvement Program** Interior/BIA issues rules concerning program category cost limitations; effective 1-10-80

2194 **Privacy Act** Justice issues annual publication of systems of records (Part II of this issue)

2052 **Offshore Crane Design, Inspection, Testing, Operation, and Operator Qualification** DOT/CG issues advance notice of proposed rulemaking, comments by 3-10-80

2060 **Radio Use in Public Utility Distribution Automation Systems** FCC proposes rules, comments by 2-19-80

2296 **Interstate System Withdrawal and Substitution** DOT/FHWA proposes rules, comments by 3-10-80 (Part V of this issue)

2134 **Fiat Model Automobiles** DOT/NHTSA issues final determination and order regarding safety related defects in 1971 model 850 and 1970-74 model 124

2156 **Sunshine Act Meetings**

Separate Parts of This Issue

2194 **Part II, Justice**
2244 **Part III, DOT/FAA**
2282 **Part IV, DOE**
2296 **Part V, DOT/FHWA**

Contents

Federal Register
Vol. 45, No. 7
Thursday, January 10, 1980

Administrative Conference of United States
NOTICES
2073 Improving regulatory process; forum

Agricultural Marketing Service
RULES
2001 Navel oranges grown in Ariz. and Cal.

Agriculture Department
See Agricultural Marketing Service; Forest Service.

Army Department
See Engineers Corps.

Arts and Humanities, National Foundation
NOTICES
Meetings:
2115 Museum Panel

Center for Disease Control
NOTICES
Meetings:
2108 Mine Health Research Advisory Committee

Civil Aeronautics Board
RULES
2018 Intrastate pairs of points; joint fares; policy statement; supplementary request for comments
Organization, functions, and authority delegations:
2018 Essential Air Services Division, Chief; renewals of orders
NOTICES
Hearings, etc.:
2074 Air New Zealand, Ltd.
2073 Braniff Airways, Inc., et al.
2074 Former large irregular air service investigation
2075 Intra-Alaska service investigation
2075 Sabena
2075 United Air Lines, Inc.
2077 Wichita-Tulsa show-cause proceeding

Coast Guard
RULES
Boating safety:
2028 Recreational boats; display of capacity information
Navigation safety regulations:
2027 Electronic navigation equipment
Suspension and revocation proceedings:
2045 Witness fees and allowances
PROPOSED RULES
2052 Cranes used offshore; design, inspection, testing, etc.
NOTICES
Vessel traffic management:
2133 New York vessel traffic service; implementation schedule; voluntary operational period delay

Commerce Department
See Foreign-Trade Zones Board; National Oceanic and Atmospheric Administration.

Commodity Futures Trading Commission
RULES
2019 Financial reporting requirements for futures commission merchants; republication

Defense Department
See Engineers Corps.

Economic Regulatory Administration
NOTICES
Consent orders:
2083 Panhandle Eastern Pipeline Co.

Education Office
NOTICES
Meetings:
2108 Vocational Education National Advisory Council

Energy Department
See also Economic Regulatory Administration; Federal Energy Regulatory Commission; Hearings and Appeals Office, Energy Department.
NOTICES
Consent orders:
2078, 2079 Exxon Co. U.S.A. (2 documents)
2081 Standard Oil Co. (Ohio)
Environmental statements; availability, etc.:
2079 Oil shale reserves development policy options, Garfield County, Col.; meeting
Meetings:
2079 Alternative fuels; feasibility studies and cooperative agreements

Engineers Corps
NOTICES
Environmental statements; availability, etc.:
2078 Wrightsville Beach, N.C.; proposed maintenance of hurricane protection and beach control erosion project

Environmental Protection Agency
RULES
Air quality control regions; criteria and control techniques:
2044 Attainment status designations; Oregon
Air quality implementation plans; approval and promulgation; various States, etc.:
2032 Florida et al.
2036 Massachusetts
2031 Mississippi
2034 Montana
PROPOSED RULES
Air quality implementation plans; approval and promulgation; various States, etc.:
2054 Arizona
Pesticide chemicals in or on raw agricultural commodities; tolerances and exemptions, etc.:
2058 Corn gluten meal etc.
2058 Ethofumesate

Waste management, solid:
2059 Hazardous waste and hazardous waste management; environmental and economic impact reports; availability
NOTICES
Meetings:
2100 Technology Assessment and Pollution Control Advisory Committee
Pesticides; emergency exemption applications:
2097 Diclofop-methyl
2092 Fenvalerate
2094 Napropamide
2096 Permethrin and fenvalerate (2 documents)
2098 Propham
2100 Strychnine baits; correction
2093 Trifluralin
Pesticides; experimental use permit applications:
2094 Florida Dept. of Citrus
Pesticides; temporary tolerances:
2092 Abbott Laboratories
2097 Mobay Chemical Co.
2095 Prevention of significant air quality deterioration (PSD); final determinations

Federal Aviation Administration
RULES
Airworthiness directives:
2002 Avions Marcel Dassault
2007, 2008 Boeing (2 documents)
2002 British Aerospace
2003, 2004 Cessna (2 documents)
2006 Piper
2009 Rockwell
2005 Rolls Royce
2010 Sikorsky
2005 Teledyne Continental Motors
2013 Control areas and restricted areas
2011 Control zones
2011, 2012 Control zones and transition areas (2 documents)
2016 Standard instrument approach procedures
2012, 2013 Transition areas (2 documents)
PROPOSED RULES
2048 Control zones
2051 Restricted areas
2048–2051 Transition areas (4 documents)
NOTICES
2244 Environmental statements; consideration; policies and procedures
Meetings:
2133 High Altitude Pollution Program Scientific Advisory Committee

Federal Communications Commission
PROPOSED RULES
Common carrier services:
2066 MTS and WATS market structure; extension of time
Radio services, special:
2071 Amateur radio service; volunteer examiners, submission requirements; withdrawn
2067 Private land mobile; authorization of wide-area mobile radio communications systems on frequencies allocated for trunked systems
2069 Private operational-fixed microwave service; facilitating operation of low power, limited coverage systems
2060 Public utility distribution automation system; use of radio
Radio stations; table of assignments:
2067 Missouri; extension of time
NOTICES
Hearings, etc.:
2100 Hangtown Broadcasters et al.

Federal Emergency Management Agency
NOTICES
Disaster and emergency areas:
2102 Washington

Federal Energy Regulatory Commission
RULES
Public Utility Regulatory Policies Act of 1978:
2023 Cost of service information collection; petition for reconsideration
PROPOSED RULES
Natural Gas Policy Act of 1978:
2052 Outer Continental Shelf gas sales; distributor access; policy statement; extension of time
NOTICES
2084 Federal Power Commission Reports, Volume 47; availability
Hearings, etc.:
2086 American Bakeries Co. et al.
2086 Appalachian Power Co.
2087 Cerro Wire & Cable Co., et al.
2087 Consolidated Gas Supply Corp.
2088 Commonwealth Edison Co.
2088, 2089 Duke Power Co. (4 documents)
2089 Empire District Electric Co.
2089 Florida Power Corp.
2090 Mills, Gordon L.
2090 Kansas City Power & Light Co.
2085 Operation Overcharge et al.
2090 Pacific Gas & Electric Co.
2090 Union Light, Heat & Power Co.
2085 United Gas Pipeline Co.

Federal Highway Administration
PROPOSED RULES
Planning:
2296 Interstate System; withdrawal of nonessential highway routes and substitution for highway or nonhighway mass transit projects

Federal Maritime Commission
NOTICES
Freight forwarder licenses:
2102 Bruce Duncan Co., Inc.
2156 Meetings; Sunshine Act

Federal Trade Commission
NOTICES
2102 Cigarette testing results; tar and nicotine content

Fish and Wildlife Service
RULES
Fishing:
2046 Kirwin National Wildlife Refuge, Kans., et al.

Foreign-Trade Zones Board
NOTICES
Applications, etc.:
2077 Panama City, Fla.

Forest Service
NOTICES
Meetings:
2073 Lewis and Clark National Forest Grazing Advisory Board

General Accounting Office
NOTICES
2104 Regulatory reports review; proposals, approvals, etc. (FMC)

General Services Administration
NOTICES
Procurement:
2104 Contract clearance procedures
Public utilities; hearings, etc.:
2107 District of Columbia Public Service Commission; correction

Health, Education, and Welfare Department
See also Center for Disease Control; Education Office; National Institute for Occupational Safety and Health; Public Health Service.
NOTICES
Meetings:
2109 Physical Fitness and Sports, President's Council

Hearings and Appeals Office, Energy Department
NOTICES
Applications for exception:
2282 Decisions and orders
Applications for exception and stay:
2091 Ashland Oil, Inc.

Indian Affairs Bureau
RULES
2026 Housing improvement program; program category cost limitations

Interior Department
See Fish and Wildlife Service; Indian Affairs Bureau; Land Management Bureau.

Interstate Commerce Commission
NOTICES
2151 Fourth section applications for relief
Motor carriers:
2152 Finance applications
2142 Permanent authority applications
2155 Railroad car service rules, mandatory; exemptions; correction
Railroad services abandonment:
2151 Illinois Terminal Railroad Co. (3 documents)
2152 Live Oak, Perry & South Georgia Railway Co.

Justice Department
NOTICES
2194 Privacy Act; systems of records; annual publication

Land Management Bureau
NOTICES
Alaska native claims selections; applications, etc.:
2110 Haida Corp.
2111 Pedro Bay Corp.
Environmental statements; availability, etc.:
2114 Shivwits Resource Area, Ariz.; proposed grazing management plan; hearing
Meetings:
2115 Outer Continental Shelf Advisory Board
Outer Continental Shelf:
2115 Mineral and oil and gas leases; Pacific area; protraction diagrams; availability
Survey plat filings:
2115 California
Withdrawal and reservation of lands, proposed, etc.:
2114 Alaska; correction

Management and Budget Office
NOTICES
2120 Agency forms under review

National Highway Traffic Safety Administration
NOTICES
Meetings:
2141 Heavy Duty Truck Safety Panel
2141 Safety, bumper, and consumer information programs
Motor vehicle defect proceedings; petitions, etc.:
2134 Fiat Motors of North America, Inc.; undercarriage corrosion
2134 Goodyear Tire & Rubber Co.; retreaded tire sale; petition denied

National Institute for Occupational Safety and Health
NOTICES
Meetings:
2107 Non-pharmacologic approach to hypertension control at the workplace and epidemiologic study of Portsmouth Naval Shipyard

National Oceanic and Atmospheric Administration
NOTICES
Environmental statements; availability, etc.:
2078 Gray's Reef, Ga.; proposed marine Sanctuary

National Transportation Safety Board
NOTICES
2116 Accident reports, safety recommendations and responses, etc.; availability
2156 Meetings; Sunshine Act

Nuclear Regulatory Commission
NOTICES
Applications, etc.:
2116 Arizona Public Service Co. et al.

Pension Benefit Guaranty Corporation
RULES
2026 Plan benefits valuation; interest rates and factors; interim

Public Health Service
NOTICES
2109 Health maintenance organizations, qualified; noncompliance determination (2 documents)

Securities and Exchange Commission
NOTICES
Hearings, etc.:
2121 Boston Stock Exchange, Inc., et al.
2126 Joint industry plan; consolidated transaction reporting system
2127 Lord Abbett Developing Growth Fund, Inc.
2127 Michigan Power Co.
2129 National Fuel Gas Co. et al.
2130 New York Stock Exchange, Inc.
2156 Meetings; Sunshine Act
Self-regulatory organizations; proposed rule changes:
2122 Chicago Board Options Exchange, Inc.
2128 National Association of Securities Dealers, Inc.
2131 Philadelphia Stock Exchange, Inc.
2132 Stock Clearing Corp. of Philadelphia

Small Business Administration
RULES
2001 Administration; Practice rules, deletion; organization and functions, clarification; correction

State Department
NOTICES
Meetings:
2132 International Telegraph and Telephone Consultative Committee
2133 Shipping Coordinating Committee (3 documents)

Transportation Department
See Coast Guard; Federal Aviation Administration; Federal Highway Administration; National Highway Traffic Safety Administration; Urban Mass Transportation Administration.

Transportation Policy Study, National Commission
RULES
2001 Privacy Act; implementation; CFR Part removed

Treasury Department
NOTICES
Tax treaties, income; various countries:
2142 Trinidad and Tobago
2142 Tunisia

Urban Mass Transportation Administration
PROPOSED RULES
2296 Interstate System; withdrawal of nonessential highway routes and substitution for highway or nonhighway mass transit projects

U.S. Railroad Retirement Board
NOTICES
2156 Meetings; Sunshine Act

World Hunger, Presidential Commission on
NOTICES
2121 Meetings

MEETINGS ANNOUNCED IN THIS ISSUE

ADMINISTRATIVE CONFERENCE OF THE UNITED STATES
2073 Forum on Improving the Regulatory Process, 1-21-80

AGRICULTURE DEPARTMENT
Forest Service—
2073 Lewis and Clark National Forest Grazing Advisory Board, 3-4-80

COMMERCE DEPARTMENT
National Oceanic and Atmospheric Administration—
2078 Proposed marine sanctuary at Gray's Reef off the coast of Georgia, preparation of draft environmental impact statement, 1-15-80

ENERGY DEPARTMENT
2079 Office of Resource Applications, 1-15-80

ENVIRONMENTAL PROTECTION AGENCY
2100 Science Advisory Board, Technology Assessment and Pollution Control Advisory Committee, 1-26-80

INTERIOR DEPARTMENT
Bureau of Land Management—
2115 Outer Continental Shelf Advisory Board, Mid-Atlantic Technical Working Group Committee, 2-6 and 2-7-80

HEALTH, EDUCATION, AND WELFARE DEPARTMENT
Center for Disease Control—
2107 Investigation of a Non-Pharmacologic Approach to Hypertension Control at the Workplace and Epidemiologic Study of Portsmouth Naval Shipyard, 2-7-80
2108 Mine Health Research Advisory Committee, 2-5-80
Office of Education—
2108 National Advisory Council on Vocational Education, 1-25-80
Office of Assistant Secretary for Health—
2109 President's Council on Physical Fitness and Sports, 1-31-80

NATIONAL FOUNDATION FOR THE ARTS AND HUMANITIES
2115 National Council on the Arts, Museum Panel (Museum Purchase Plan), 2-12-80

PRESIDENTIAL COMMISSION ON WORLD HUNGER
2121 1-18-80

STATE DEPARTMENT
2132 International Telegraph and Telephone Consultative Committee, 1-31-80
2133 Shipping Coordinating Committee, Subcommittee on Safety of Life at Sea, 1-23-80 (3 documents)

TRANSPORTATION DEPARTMENT
Federal Aviation Administration—
2133 High Altitude Pollution Program Scientific Advisory Committee, 1-23, 1-24 and 1-25-80
National Highway Traffic Safety Administration—
2141 Heavy Truck Safety Panel, 2-19-80

HEARING

INTERIOR DEPARTMENT
Bureau of Land Management—
2114 Shivwits Resource Area, Mohave County, Ariz., proposed grazing management, 1-30-80

CFR PARTS AFFECTED IN THIS ISSUE

A cumulative list of the parts affected this month can be found in the Reader Aids section at the end of this issue.

1 CFR
445 2001

7 CFR
907 2001

13 CFR
101 2001

14 CFR
39 (11 documents) 2002–2010
71 (6 documents) 2011–2013
73 2013
97 2016
385 2018
399 2018

Proposed Rules
71 (5 documents) 2048–2051
73 2051

17 CFR
1 2019
145 2019
147 2019

18 CFR
290 2023

Proposed Rules
280 2052
284 2052

23 CFR

Proposed Rules
450 2296
476 2296

25 CFR
261 2026

29 CFR
2610 2026

33 CFR
164 2027
183 2028

Proposed Rules
Ch. I 2052

40 CFR
52 (4 documents) 2031–2036
81 (2 documents) 2036, 2044

Proposed Rules
52 2054
180 (2 documents) 2058
250 2059

46 CFR
4 2045
5 2045

Proposed Rules
Ch. I 2052

47 CFR

Proposed Rules
2 2060
63 2066
73 2067
90 2067
94 (2 documents) 2060, 2069
97 2071

50 CFR
33 2046

Securities and Exchange Commission
NOTICES
Hearings, etc.:
2131 Boston Stock Exchange, Inc., et al.
2139 Joint industry plan; consolidated transaction reporting system
2137 Lord Abbett Developing Growth Fund, Inc.
2137 Michigan Power Co.
2139 National Fuel Gas Co. et al.
2130 New York Stock Exchange, Inc.
2138 Meetings; Sunshine Act
Self-regulatory organizations; proposed rule changes:
2132 Chicago Board Options Exchange, Inc.
2133 National Association of Securities Dealers, Inc.
2131 Philadelphia Stock Exchange, Inc.
2132 Stock Clearing Corp. of Philadelphia

Small Business Administration
RULES
2001 Administrative; Freedom of Information Act; organization and functions; clarification amendment

State Department
NOTICES
Meetings:
2122 International Telegraph and Telephone Consultative Committee
2123 Shipping Coordinating Committee (3 documents)

Transportation Department
See Coast Guard; Federal Aviation Administration; Federal Highway Administration; National Highway Traffic Safety Administration; Urban Mass Transportation Administration.

Transportation Policy Study, National Commission
RULES
2001 Privacy Act; implementation; CFR Part removed

Treasury Department
NOTICES
Tax treaties; income; various countries:
2142 Trinidad and Tobago
2142 Zambia

Urban Mass Transportation Administration
PROPOSED RULES
2095 Interstate System; withdrawal of nonessential highway routes and substitution for highway or nonhighway mass transit projects

U.S. Railroad Retirement Board
NOTICES
2150 Meetings; Sunshine Act

World Hunger, Presidential Commission on
NOTICES
2121 Meetings

MEETINGS ANNOUNCED IN THIS ISSUE

ADMINISTRATIVE CONFERENCE OF THE UNITED STATES
2073 Forum on Improving the Regulatory Process, 1-31-80

AGRICULTURE DEPARTMENT
Forest Service—
[illegible] Board, [illegible]

COMMERCE DEPARTMENT
National Oceanic and Atmospheric Administration—
2098 Proposed marine sanctuary at Gray's Reef off the coast of Georgia, preparation of draft environmental impact statement, 1-15-80

ENERGY DEPARTMENT
2073 Office of Resource Applications, 1-15-80

ENVIRONMENTAL PROTECTION AGENCY
2100 Science Advisory Board, Technology Assessment and Pollution Control Advisory Committee, 1-28-80

INTERIOR DEPARTMENT
Bureau of Land Management—
2115 Outer Continental Shelf Advisory Board, Mid-Atlantic Technical Working Group Committee, 2-6 and 2-7-80

HEALTH, EDUCATION, AND WELFARE DEPARTMENT
Center for Disease Control—
2107 Investigation of a Non-Pharmacologic Approach to Hypertension Control at [illegible] and Epidemiologic Study of [illegible] Mental Retarded, 2-7-80
2108 Mine Health Research Advisory Committee, 2-9-80
Office of Education—
2109 National Advisory Council on Vocational Education, 1-25-80
Office of Assistant Secretary for Health—
2109 President's Council on Physical Fitness and Sports, 1-31-80

NATIONAL FOUNDATION FOR THE ARTS AND HUMANITIES
2119 National Council on the Arts, Museum Panel (Museum Purchase Plan), 1-28-80

PRESIDENTIAL COMMISSION ON WORLD HUNGER
2121 1-18-80

STATE DEPARTMENT
2122 International Telegraph and Telephone Consultative Committee, 1-31-80
2123 Shipping Coordinating Committee, Subcommittee on Safety of Life at Sea, 1-31-80 (3 documents)

TRANSPORTATION DEPARTMENT
Federal Aviation Administration—
2123 High Altitude Pollution Program Scientific Advisory Committee, 1-31, 2-01 and [illegible]
National Highway Traffic Safety Administration—
2141 Heavy Truck Safety Panel, [illegible]

HEARING

INTERIOR DEPARTMENT
Bureau of Land Management—
2114 Shivwits Resource Area, Mohave County, Ariz., proposed grazing management, 1-29-80

Rules and Regulations

Federal Register
Vol. 45, No. 7
Thursday, January 10, 1980

This section of the FEDERAL REGISTER contains regulatory documents having general applicability and legal effect, most of which are keyed to and codified in the Code of Federal Regulations, which is published under 50 titles pursuant to 44 U.S.C. 1510.
The Code of Federal Regulations is sold by the Superintendent of Documents. Prices of new books are listed in the first FEDERAL REGISTER issue of each month.

NATIONAL TRANSPORTATION POLICY STUDY COMMISSION

1 CFR Part 445

Privacy Act of 1974 Regulations

AGENCY: National Transportation Policy Study Commission.

ACTION: Final rule.

SUMMARY: The National Transportation Policy Study Commission has been abolished by compliance with Pub. L. 94-280, as amended, which created the Commission.

EFFECTIVE DATE: December 31, 1979.

FOR FURTHER INFORMATION CONTACT: Dennis G. Condie, (202) 566-1792.

SUPPLEMENTARY INFORMATION: Commission hereby removes Part 445 from 1 CFR.

Dated: January 2, 1980.

Dennis G. Condie,

Administrative Officer.

[FR Doc. 80-816 Filed 1-9-80; 8:45 am]

BILLING CODE 6820-36-M

DEPARTMENT OF AGRICULTURE

Agricultural Marketing Service

7 CFR Part 907

[Navel Orange Reg. 475; Navel Orange Reg. 474, Adt. 1]

Navel Oranges Grown in Arizona and Designated Part of California; Limitation of Handling

AGENCY: Agricultural Marketing Service, USDA.

ACTION: Final rule.

SUMMARY: This action establishes the quantity of fresh California-Arizona navel oranges that may be shipped to market during the period January 11-January 17, 1980, and increases the quantity of such oranges that may be so shipped during the period January 4-10, 1980. Such action is needed to provide for orderly marketing of fresh navel oranges for the period specified due to the marketing situation confronting the orange industry.

DATES: This regulation becomes effective January 11, 1980, and the amendment is effective for the period January 4-10, 1980.

FOR FURTHER INFORMATION CONTACT: Malvin E. McGaha (202) 447-5975.

SUPPLEMENTARY INFORMATION: *Findings.* This regulation and amendment are issued under the marketing agreement, as amended, and Order No. 907, as amended (7 CFR Part 907), regulating the handling of navel oranges grown in Arizona and designated part of California. The agreement and order are effective under the Agricultural Marketing Agreement Act of 1937, as amended (7 U.S.C. 601-674). The action is based upon the recommendations and information submitted by the Navel Orange Administrative Committee and upon other available information. It is hereby found that this action will tend to effectuate the declared policy of the act.

The committee met on January 8, 1980, to consider supply and market conditions and other factors affecting the need for regulation, and recommended quantities of navel oranges deemed advisable to be handled during the specified weeks. The committee reports the demand for navel oranges has improved over recent weeks.

It is further found that it is impracticable and contrary to the public interest to give preliminary notice, engage in public rulemaking, and postpone the effective date until 30 days after publication in the Federal Register (5 U.S.C. 553), because of insufficient time between the date when information became available upon which this regulation and amendment are based and the effective date necessary to effectuate the declared policy of the act. Interested persons were given an opportunity to submit information and views on the regulation at an open meeting, and the amendment relieves restrictions on the handling of navel oranges. It is necessary to effectuate the declared purposes of the act to make these regulatory provisions effective as specified, and handlers have been apprised of such provisions and the effective time.

Further, in accordance with procedures in Executive Order 12044, the emergency nature of this regulation warrants publication without opportunity for further public comment. The regulation has not been classified significant under USDA criteria for implementing the Executive Order. An Impact Analysis is available from Malvin E. McGaha, Fruit Branch, Fruit and Vegetable Division, AMS, USDA, Washington, D.C. 20250, phone (202) 447-5975.

§ 907.775 Navel Orange Regulation 475.

Order. (a) The quantities of navel oranges grown in Arizona and California which may be handled during the period January 11, 1980, through January 17, 1980, are established as follows: (1) District 1: 1,144,000 cartons; (2) District 2: 117,000 cartons; (3) District 3: 13,000 cartons; (4) District 4: 26,000 cartons.

(b) As used in this section, "handle," "District 1," "District 2," "District 3," "District 4" and "carton" mean the same as defined in the marketing order.

§ 907.774 [Amended].

2. Paragraph (a) in § 907.774 Navel Orange Regulation 474. (45 FR 762), is hereby amended to read: (1) District 1: 1,104,000 cartons; (2) District 2: 48,000 cartons; (3) District 3: 24,000 cartons; (4) District 4: 24,000 cartons.

(Secs. 1-19, 48 Stat. 31, as amended; 7 U.S.C. 601-674)

Dated: January 9, 1980.

D. S. Kuryloski,

Acting Director, Fruit and Vegetable Division, Agricultural Marketing Service.

[FR Doc. 1104 Filed 1-9-80; 11:59 am]

BILLING CODE 3410-02-M

SMALL BUSINESS ADMINISTRATION

13 CFR Part 101

Administration; Practice Rules, Deletion; Organization and Functions, Clarification

AGENCY: Small Business Administration.

ACTION: Final rules; Correction.

SUMMARY: This document corrects two final rules relating to The Section 8(a) Program (adjudicative rules of practice)

and Administration published at 44 FR 30666, May 29, 1979 and 44 FR 76757, December 28, 1979, respectively. The correction is necessary to add and clarify amendatory language.

FOR FURTHER INFORMATION CONTACT: Amos B. Cheeseboro, Office of Personnel Services (202-653-6630).

SUPPLEMENTARY INFORMATION: 1. The amendatory language in FR Doc. 79-16784 appearing at page 30666 in the second column in the issue for Tuesday, May 29, 1979 should read:

"13 CFR is amended as follows:

1. In Part 101 by removing §§ 101.10—101.10-27.

2. Part 124 is amended by adding §§ 124.10—124.10-25."

2. The amendatory language in FR Doc. 79-39622 appearing at page 76757 in the issue for Friday, December 28, 1979, should read:

"Title 13, Code of Federal Regulations, Part 101 is amended by revising § 101.1 through 101.3-1 to read as follows:".

Accordingly, Sections 101.3-2 through 101.9 remain unchanged. Sections 101.10 through 101.10-27 which were added January 24, 1979 (See 44 FR 4957) were superseded by 13 CFR Part 124 on May 29, 1979 (See 44 FR 30666).

Dated: January 7, 1980.

Oleta F. Waugh,

Federal Register Liaison Officer.

[FR Doc. 80-1010 Filed 1-9-80; 8:45 am]

BILLING CODE 8025-01-M

DEPARTMENT OF TRANSPORTATION

Federal Aviation Administration

14 CFR Part 39

[Docket No. 19931; Amdt. 39-3656]

Avions Marcel Dassault—Breguet Aviation Fan Jet Falcon, Series D, E and F Airplanes; Airworthiness Directives

AGENCY: Federal Aviation Administration (FAA), DOT.

ACTION: Final rule.

SUMMARY: This amendment adopts a new Airworthiness Directive (AD) that requires modification of certain engine fire extinguisher rigid lines and replacement of certain flexible lines on all Avions Marcel Dassault—Breguet Aviation (AMD), Model Fan Jet Falcon Series D, E and F airplanes. The AD is needed to reduce possible failure of the engine fire extinguisher flexible lines which, if failed, would make the engine fire extinguisher system ineffective in the event of an engine compartment fire.

DATES: Effective January 24, 1980. Compliance schedule—as prescribed in body of AD.

ADDRESSES: The applicable service bulletin may be obtained from:

Falcon Jet Corporation, 90 Moonachie Ave., Moonachie, New Jersey 07074; or

Europe Falcon Service, Boite Postale No. 10, Aeroport du Bourget, 93350—Le Bourget, France.

A copy of the service bulletin is contained in the Rules Docket, Room 916, 800 Independence Avenue, S.W., Washington, D.C. 20591.

FOR FURTHER INFORMATION CONTACT: D. C. Jacobsen, Chief, Aircraft Certification Staff, AEU-100, Europe, Africa and Middle East Region, Federal Aviation Administration, c/o American Embassy, Brussels, Belgium, Telephone: 513.38.30, or C. Christie, Chief, Technical Standards Branch, AWS-110, Federal Aviation Administration, 800 Independence Avenue, S.W., Washington, D.C. 20591, Telephone: 202-426-8374.

SUPPLEMENTARY INFORMATION: There have been several flexible line failures of the engine fire extinguisher system on AMD Model Fan Jet Falcon (FJF) Series D, E and F airplanes. The failures are due to a short flexing radius caused by the rigid fire extinguisher lines extending too far into the flexible portion of the flexible line. Flexible line failure would cause the engine fire extinguisher system to be ineffective in the event of an engine compartment fire. Since this condition is likely to exist or develop on other FJF Series D, E and F airplanes of the same type design, the AD requires modification of certain rigid lines and replacement of flexible lines in the engine fire extinguisher system in accordance with AMD Service Bulletin No. 632, dated July 18, 1979, on Fan Jet Falcon Series D, E and F airplanes.

Since a situation exists that requires immediate adoption of this regulation, it is found that notice and public procedure hereon are impracticable and good cause exists for making this amendment effective in less than thirty (30) days.

Adoption of the Amendment

Accordingly, pursuant to the authority delegated to me by the Administrator, § 39.13 of Part 39 of the Federal Aviation Regulations (14 CFR 39.13) is amended by adding the following new Airworthiness Directive:

§ 39.13 [Amended].

Avions Marcel Dassault—Breguet Aviation. Applies to Fan Jet Falcon Series D, E and F airplanes, Serial numbers 1 through 404, certificated in all categories.

Compliance is required as indicated, unless already accomplished.

To reduce the possibility of flexible line failure in the engine fire extinguisher system, within the next 100 hours time in service after the effective date of this AD, unless already accomplished, in each engine fire extinguisher system, modify the rigid tubing and install a new flexible line in accordance with paragraph 2, "Accomplishment Instructions," of Avions Marcel Dassault, Service Bulletin No. 632, dated July 18, 1979, or an equivalent approved by the Chief, Aircraft Certification Staff, Federal Aviation Administration, Europe, Africa and Middle East Region.

This amendment becomes effective January 24, 1980.

(Secs. 313(a), 601, and 603, Federal Aviation Act of 1958, as amended (49 U.S.C. 1354(a), 1421, and 1423); Sec. 6(c), Department of Transportation Act (49 U.S.C. 1655(c); 14 CFR 11.89))

Note.—The Federal Aviation Administration has determined that this document involves a regulation which is not significant under Executive Order 12044 as implemented by Department of Transportation Regulatory Policies and Procedures (44 FR 11034; February 26, 1979). A copy of the final evaluation prepared for this action is in the regulatory docket. A copy of it may be obtained by writing to C. Christie, Chief, Technical Standards Branch, AWS-110, Federal Aviation Administration, 800 Independence Avenue, S.W., Washington, D.C. 20591.

Issued in Washington, D.C. on December 20, 1979.

M. C. Beard,

Director of Airworthiness.

[FR Doc. 80-453 Filed 1-9-80; 8:45 am]

BILLING CODE 4910-13-M

14 CFR Part 39

[Docket No. 19932; Amdt. 39-3657]

British Aerospace Model HS 125 Series 700 Airplanes; Airworthiness Directives

AGENCY: Federal Aviation Administration (FAA), DOT.

ACTION: Final rule.

SUMMARY: This amendment adopts an Airworthiness Directive (AD) that requires replacement of the aluminum HTE "V" clamps in the pressure refuel and defuel system as installed on certain British Aerospace Model HS 125 Series 700 airplanes. This AD is prompted by reports of cracked and failed "V" clamps which could permit the pressure refuel and defuel components to become disconnected, cause damage to structure and controls, release fuel into inadequately drained and ventilated zones of the aircraft, and result in a fire hazard.

DATES: Effective January 24, 1980. Compliance schedule—as prescribed in body of AD.

ADDRESSES: The applicable service bulletin may be obtained from: Service Manager, HS 125, Product Support Department, British Aerospace Aircraft Group, Hatfield, Herts. AL10 9TL, England.

A copy of the service bulletin is contained in the Rules Docket, Room 916, 800 Independence Avenue SW., Washington, D.C. 20591.

FOR FURTHER INFORMATION CONTACT: D. C. Jacobsen, Chief, Aircraft Certification Staff, AEU-100, Europe, Africa and Middle East Region, Federal Aviation Administration, c/o American Embassy, Brussels, Belgium, Telephone: 513.38.30, or C. Christie, Chief, Technical Standards Branch, AWS-110, Federal Aviation Administration, 800 Independence Ave. SW., Washington, D.C. 20591, Telephone 202-426-8374.

SUPPLEMENTARY INFORMATION: There have been reports of cracks and failures of the aluminum HTE "V" clamps, P/N HTE 8001, which support the actuators for the left and right wing vent valves, the left and right wing refuel valves and the master refuel valve on British Aerospace Model HS 125 series 700 airplanes which could result in the release of fuel. Since this condition is likely to exist or develop on other airplanes of the same type design, an airworthiness directive is being issued which requires installation of steel "V" clamps in accordance with British Aerospace Modification 252694.

Since a situation exists that requires the immediate adoption of this regulation, it is found that notice and public procedure hereon are impracticable and good cause exists for making this amendment effective in less than 30 days.

Adoption of the Amendment

Accordingly, pursuant to the authority delegated to me by the Administrator, § 39.13 of Part 39 of the Federal Aviation Regulations (14 CFR 39.13) is amended by adding the following new Airworthiness Directive:

§ 39.13 [Amended]

British Aerospace Applies to British Aerospace Model HS 125 Series 700 airplanes with pressure refuel/defuel system installed, certificated in any category.

Compliance is required as indicated unless already accomplished.

To prevent the failure of the aluminum HTE "V" clamps installed in the pressure refuel and defuel system, within the next 50 hours time in service or within the next 28 days after the effective date of this AD, whichever occurs sooner, incorporate British Aerospace modification 252694, or an equivalent modification approved by the Chief, Aircraft Certification Staff, AEU-100, Europe, Africa, and Middle East Region, Federal Aviation Administration, c/o American Embassy, Brussels, Belgium.

Note.—British Aerospace Service Bulletin 28-67 revision 1 dated December 19, 1978 and Service Bulletin 28-A66 dated October 3, 1978 refer to this same subject.

This amendment becomes effective January 24, 1980.

(Secs. 313(a), 601, and 603, Federal Aviation Act of 1958, as amended (49 U.S.C. 1354(a), 1421, and 1423); Sec. 6(c), Department of Transportation Act (49 U.S.C. 1655(c); 14 CFR 11.89))

Note.—The Federal Aviation Administration has determined that this document involves a regulation which is not significant under Executive Order 12044, as implemented by Department of Transportation Regulatory Policies and Procedures (44 FR 11034; February 26, 1979). A copy of the final evaluation prepared for this action is contained in the regulatory docket. A copy of it may be obtained by writing to C. Christie, Chief, Technical Standards Branch, AWS-110, Federal Aviation Administration, 800 Independence Avenue SW., Washington, D.C. 20591.

Issued in Washington, D.C. on December 28, 1979.

M. C. Beard,

Director of Airworthiness.

[FR Doc. 80-454 Filed 1-9-80; 8:45 am]

BILLING CODE 4910-13-M

---

14 CFR 39

[Docket No. 79-CE-8-AD; Amendment 39-3652]

Cessna Models 401, 401A, 401B, 402, 402A, 402B, 411 and 411A Airplanes; Airworthiness Directive

AGENCY: Federal Aviation Administration (FAA), DOT.

ACTION: Final rule, revision.

SUMMARY: This amendment revises Airworthiness Directive (AD) 79-10-15, Amendment 39-3473, applicable to Cessna Models 401, 401A, 401B, 402, 402A, 402B, 411 and 411A airplanes by citing a later revision of Cessna Multi-engine Service Information which is needed to accomplish the inspections required by the AD and adding information clarifying certain compliance time options available to the owners/operators of these airplanes.

EFFECTIVE DATE: December 26, 1979. Compliance schedule: As prescribed in the body of the AD.

ADDRESSES: Cessna Multi-engine Service Information Letter ME 79-16, Revision 2, applicable to this AD, may be obtained from Cessna Aircraft Company, Marketing Division, Attention: Customer Service Department, Wichita, Kansas 67201; Telephone (316) 685-9111. A copy of the service letter is contained in the Rules Docket, Office of the Regional Counsel, Room 1558, 601 East 12th Street, Kansas City, Missouri 64106 and at Room 916, 800 Independence Avenue, S.W., Washington, D.C. 20591.

FOR FURTHER INFORMATION CONTACT: Lawrence S. Abbott, Aerospace Engineer, Engineering and Manufacturing District Office Number 43, Room 238, Mid-Continent Airport, Wichita, Kansas; Telephone (316) 942-4219.

SUPPLEMENTARY INFORMATION: Amendment 39-3473, AD79-10-15 requires repetitive inspections of wing front spars on certain Cessna 401, 402, and 411 series airplanes. It was found after issuance of AD79-10-15 that Cessna Multi-engine Service Information Letter ME79-16 did not address the difference in wing structure between the 401/402 and the 411 series airplanes. In order to correct this, Cessna issued a revised method of inspection specifically for the 411 series airplanes in ME79-16 Revision 2. The new inspection method for the 411 series airplanes applies only to Paragraph B) of AD79-10-15. Accordingly, AD79-10-15 is being amended to reference the revised Cessna Multi-engine Service Information Letter. While Cessna was revising Multi-engine Service Information Letter ME79-16, it elected to change the inspection interval for Areas A and B from 1,000 hours to 800 hours time-in-service. This change aligns the inspection intervals so that Areas A and B are inspected every other time Area C is inspected. There is no technical justification related to safety for reducing the inspection intervals from 1,000 to 800 hours time-in-service. For this reason Paragraph D of the AD is being changed to make it obvious to owners/operators that they have the option of doing the repetitive inspections of areas A and B at either 800 or 1,000 hours time-in-service.

Since this amendment is relieving in nature and imposes no additional burden on any person, notice and public procedure hereon are impracticable and good cause exists for making this amendment effective in less than 30 days after the date of publication in the Federal Register.

Adoption of the Amendment

§ 39.13 [Amended]

Accordingly, pursuant to the authority delegated to me by the Administrator,

Amendment 39-3473 (44 FR 29438 through 29439), AD 79-10-15 of Section 39.13 of Part 39 of the Federal Aviation Regulations (14 CFR 39.13) is amended as follows:

(1) In the third paragraph of Paragraph A, delete the words "Letter ME79-16 dated April 2, 1979" and in lieu thereof add the words "Letter ME79-16, Revision 2 dated November 16, 1979."

(2) In the third paragraph of Paragraph B, delete the words "Letter ME79-16 dated April 2, 1979" and in lieu thereof add the words "Letter ME79-16, Revision 2 dated November 16, 1979."

(3) Delete the existing Paragraph D and in lieu thereof add the following:

(D) As an alternative, inspection intervals set forth in Paragraphs A and B of this AD may be adjusted up to maximum intervals of 1,050 and 420 hours' time-in-service respectively to allow said inspections to be performed at regularly scheduled inspections or maintenance periods. The 1,000 hours repetitive inspections required by Paragraph A may be accomplished at 800 hour intervals (every other 400 hour inspection required by Paragraph B) if owners/operators elect to do so. If Paragraph A inspections are performed at 800 hour intervals, the interval may be adjusted up to a maximum of 840 hours time-in-service to permit accomplishment at previously scheduled maintenance inspections or maintenance periods.

(4) In the Note: Following Paragraph F, delet the words "4 of ME79-16" and in lieu thereof add the words "5 of ME79-16, Revision 2."

This amendment becomes effective December 26, 1979.

(Secs. 313(a), 601 and 603 of the Federal Aviation Act of 1958, as amended, (49 U.S.C. 1354(a), 1421 and 1423); Sec. 6(c) Department of Transportation Act (49 U.S.C. 1655(c)); Sec. 11.89 of the Federal Aviation Regulations (14 CFR Sec. 11.89))

Note.—The FAA has determined that this document involves a regulation which is not significant under Executive Order 12044, as implemented by Department of Transportation Regulatory Policies and Procedures (44 FR 11034; February 26, 1979). A copy of the final evaluation prepared for this document is contained in the docket. A copy of it may be obtained by writing to William L. Schroeder, Aerospace Engineer, Engineering and Manufacturing Branch, Federal Aviation Administration, Central Region, 601 East 12th Street, Kansas City, Missouri 64106, Telephone (816) 374-3146.

Issued in Kansas City, Missouri on December 26, 1979.

Paul J. Baker,

Director, Central Region.

[FR Doc. 80-466 Filed 1-9-80; 8:45 am]

BILLING CODE 4910-13-M

14 CFR Part 39

[Docket No. 79-CE-17-AD; Amendment 39-3651]

Part 39—Airworthiness Directives; Cessna Model 441 Airplanes

AGENCY: Federal Aviation Administration (FAA), DOT.

ACTION: Final rule, revision.

SUMMARY: This amendment revises Airworthiness Directive (AD) 79-19-13, Amendment 39-3578, applicable to Cessna Model 441 airplanes, by citing later revisions of Cessna Service Information which is needed to accomplish the modifications required by AD 79-19-13.

EFFECTIVE DATE: December 26, 1979.

ADDRESSES: Cessna Propjet Service Information Letter PJ79-15, Revision #2, and Cessna Service Kit Instructions Number SK441-27A, dated November 14, 1979, applicable to this AD, may be obtained from Cessna Aircraft Company, Marketing Division, Attention: Customer Service Department, Wichita, Kansas 67201; Telephone (316) 685-9111. Copies of the Service Letter and Service Kit Instructions are contained in the Rules Docket, Office of the Regional Counsel, Room 1558, 601 East 12th Street, Kansas City, Missouri 64106 and at Room 916, 800 Independence Avenue, S.W., Washington, D.C. 20591.

FOR FURTHER INFORMATION CONTACT: William L. (Bud) Schroeder, Aerospace Engineer, Engineering and Manufacturing Branch, FAA, Central Region, 601 East 12th Street, Kansas City, Missouri 64106; Telephone (816) 374-3446.

SUPPLEMENTARY INFORMATION: Amendment 39-3578, AD 79-19-13, applicable to Cessna Model 441 airplanes, requires (1) installation of a new horizontal stabilizer assembly, left and right elevator assemblies, and elevator trim tab control system, (2) inspection and modification or, if necessary, replacement of the tailcone shelf assembly and, (3) ground and flight checks of the airplanes with the new components installed, all in accordance with instructions in Cessna Propjet Service Information Letter PJ79-15, Revision #1, and Cessna Service Kit Instructions Number SK441-27 dated September 18, 1979. Subsequent to issuance of the AD, it became apparent that certain additional information was required or desirable to complete the modifications required by the AD. In order to expedite getting the information to the field, it was first published and made available to the field on errata sheets developed by Cessna. All required information on the errata sheets has now been incorporated into Cessna Propjet Service Information Letter, PJ79-15, Revision #2 and into Cessna Service Kit Instructions SK441-27, Revision A dated November 14, 1979. In addition, problems peculiar to specific airplanes requiring special corrective action are dispositioned by instructions transmitted to the field on Conquest Return to Service (RTS) call report forms. Therefore, the agency is revising Amendment 39-3578 to reflect these changes. Since this amendment is in part clarifying in nature and imposes no additional burden on any person, notice and public procedure hereon are impracticable and good cause exists for making this amendment effective in less than 30 days after the date of publication in the **Federal Register.**

Adoption of the Amendment

§ 39.13 [Amended]

Accordingly, pursuant to the authority delegated to me by the Administrator, Amendment 39-3578 (44 FR 54986 through 54987 and 44 FR 54709), AD 79-19-13 of Section 39.13 of Part 39 of the Federal Aviation Regulations (14 CFR 39.13) is amended as follows:

(1) In the compliance statement of the AD, delete the words "Required as indicated unless already accomplished." and in lieu thereof add the words "Required as indicated unless already accomplished in accordance with (1) Cessna Propjet Service Information Letter Number PJ79-15, Revision #1 and information applicable thereto on the errata sheet dated October 17, 1979, issued by Cessna, (2) Cessna Service Kit Instructions Number SK441-27 dated September 18, 1979, and information applicable thereto on the errata sheets, dated October 5, 17, 22 and November 5, 1979, issued by Cessna, and (3) applicable dispositions approved by Cessna and issued on Conquest Return to Service (RTS) call report forms."

(2) In the compliance statement of the AD make the second sentence which reads: "To preclude failure of the elevator trim tab actuator jack screws, accomplish the following:" a separate paragraph immediately following Item (1) of this revision.

(3) In Paragraph (B), delete the words "PJ79-15, Revision #1, and Cessna Service Kit Instructions Number SK441-27, dated September 18, 1979" and in lieu thereof add the words "PJ79-15, Revision #2, Cessna Service Kit Instructions Number SK441-27A, dated November 14, 1979, and any applicable dispositions approved by Cessna and issued on Conquest Return to Service (RTS) call report forms."

(4) Add the following note between Paragraphs (B) and (C):

Note.—Cessna has issued errata sheets dated November 20, 1979, which includes some general information items and several items showing special modification procedures to be used if certain problems

occur during compliance with Paragraph (B) of this AD. The November 20, 1979 errata sheets may not be used as the approval document for any modifications necessary to correct the subject problems. Such approval will be dispositioned by Cessna on Conquest Return to Service (RTS) call report forms issued for the specific airplane involved.

(5) In Paragraph (E), delete the words "Revision #1" and in lieu thereof add the words "Revision #2".

(6) In Paragraph (f), delete the words "Revision #1" and in lieu thereof add the words "Revision #2".

This amendment becomes effective December 26, 1979.

(Secs. 313(a), 601 and 603, Federal Aviation Act of 1958, as amended, (49 U.S.C. 1354(a), 1421 and 1423); Sec. 6(c) Department of Transportation Act (49 U.S.C. 1655(c)); Sec. 11.89 of the Federal Aviation Regulations (14 CFR Sec. 11.89))

Note.—The FAA has determined that this document involves a regulation which is not significant under Executive Order 12044, as implemented by Department of Transportation Regulatory Policies and Procedures (44 FR 11034; February 26, 1979). A copy of the final evaluation prepared for this document is contained in the docket. A copy of it may be obtained by writing to the Office of the Regional Counsel, Federal Aviation Administration, Central Region, Room 1558, 601 East 12th Street, Kansas City, Missouri 64106; Telephone (816) 374-5446.

Issued in Kansas City, Missouri on December 26, 1979.

Paul J. Baker,

Director, Central Region

[FR Doc. 80-465 Filed 1-9-80; 8:45 am]

BILLING CODE 4910-13-M

---

14 CFR Part 39

[Docket No. 79-ASW-61; Amdt. 39-3647]

Teledyne Continental Motors IO-520 and TSIO-520 Series Engines; Airworthiness Directives

AGENCY: Federal Aviation Administration (FAA), DOT.

ACTION: Final rule.

SUMMARY: This amendment adopts a new airworthiness directive (AD) which requires inspection of certain rebarreled cylinder assemblies which were rebarreled by Airmotive Engineering Corporation and installed on Teledyne Continental Motors IO-520 and TSIO-520 series engines. This AD is needed to remove from service any rebarreled cylinders which do not contain the proper radius in the cylinder holddown flange nut seats. Failure to remove such cylinders from service could result in loss of the cylinder due to separation of the flange.

DATES: Effective January 25, 1980. Compliance required within the next 50 hours time in service after the effective date of this AD, unless already accomplished.

ADDRESSES: The applicable service alert may be obtained from Airmotive Engineering Corporation, 9131 Directors Row, Dallas, Texas 75247.

A copy of the service alert is contained in the Rules Docket, Office of the Regional Counsel, Southwest Region, Federal Aviation Administration, 4400 Blue Mound Road, Fort Worth, Texas.

FOR FURTHER INFORMATION CONTACT: A. A. Backstrom, Propulsion Section, Engineering and Manufacturing Branch, ASW-214, Federal Aviation Administration, Post Office Box 1689, Fort Worth, Texas 76101, telephone number (817) 624-4911, extension 524.

SUPPLEMENTARY INFORMATION: There have been reports of cylinder bases being found broken which can result in loss of the cylinder and probable engine failure. Since this condition is likely to exist or develop on other engines of the same type design, an airworthiness directive is being issued which requires inspection of cylinder bases in the area of the holddown units for proper radius in the spotfacing on Teledyne Continental Motors IO-520 and TSIO-520 series engines.

Since a situation exists that requires the immediate adoption of this regulation, it is found that notice and public procedure hereon are impracticable and good cause exists for making this amendment effective in less than 30 days.

Adoption of the Amendment

§ 39.13 [Amended]

Accordingly, pursuant to the authority delegated to me by the Administrator, section 39.13 of Part 39 of the Federal Aviation Regulations (14 CFR 39.13) is amended by adding the following new airworthiness directive:

Teledyne Continental Motors: Applies to Continental IO-520 and TSIO-520 series engines incorporating cylinder assemblies which have been rebarreled by Airmotive Engineering Corporation.

Compliance is required within the next 50 hours time in service after the effective date of this AD, unless already accomplished, except aircraft may be flown in accordance with FAR 21.197 to a base where the maintenance required by this AD may be performed.

To prevent failure of cylinder holddown flanges, accomplish the following:

Inspect to determine if Airmotive Engineering Corporation rebarreled cylinders, Part Numbers AE-C-631397 T.T., AE-C-639272 T.T., and AE-C-639274 T.T., are installed. If installed, inspect cylinders for .050 inch minimum corner radius in the area spot faced for installation of holddown nuts. Airmotive Engineering Corporation Service Alert dated September 28, 1979, covers this also. Replace all cylinders found without the proper radius. The cylinder part numbers are marked on the flat area of the cylinder holddown flanges on the intake valve side. These cylinder assemblies may have been installed during overhaul or unscheduled maintenance.

Airmotive Engineering Corporation Service Alert dated September 28, 1979, pertains to and provides instructions for accomplishing the intent of this AD.

The manufacturer's procedures identified and described in this directive are incorporated herein and made a part thereof pursuant of U.S.C. 552(a)(1). All persons affected by this directive who have not already received these documents from the manufacturer may obtain copies upon request to Airmotive Engineering Corporation, 9131 Directors Row, Dallas, Texas 75247. These documents may also be examined at Office of the Regional Counsel, Southwest Region, Federal Aviation Administration, 4400 Blue Mound Road, Fort Worth, Texas.

Equivalent means of compliance with the modification prescribed by this AD may be approved by the Chief, Engineering and Manufacturing Branch, Flight Standards Division, Southwest Region, Federal Aviation Administration, Post Office Box 1689, Fort Worth, Texas 76101.

This amendment becomes effective January 25, 1980.

(Secs. 313(a), 601, and 603, Federal Aviation Act of 1958, as amended (49 U.S.C. 1354(a), 1421, and 1423); Sec. 6(c), Department of Transportation Act (49 U.S.C. 1655(c)); 14 CFR 11.89)

The Federal Aviation Administration has determined that this document does not contain a major proposal requiring preparation of an Economic Impact Statement under Executive Order 11821, as amended by Executive Order 11949, and OMB Circular A-107.

Issued in Fort Worth, Texas, on December 18, 1979.

C. R. Melugin, Jr.,

Director, Southwest Region.

Note.—The incorporation by reference in this document was approved by the Director of the Federal Register on June 19, 1967.

[FR Doc. 80-462 Filed 1-9-80; 8:45 am]

BILLING CODE 4910-13-M

---

14 CFR Part 39

[Docket No. 19930; Amdt. 39-3655]

Rolls Royce, Ltd., Viper Mk 601-22 Engines; Airworthiness Directives

AGENCY: Federal Aviation Administration (FAA), DOT.

ACTION: Final rule.

SUMMARY: This amendment adopts a new Airworthiness Directive (AD) that requires removing the flexible fuel hose,

P/N DX 33-180-300, and installing a new flexible fuel hose, P/N V 103813, which performs the same function but is rerouted between the electro pressure control and the air fuel ratio control on the Rolls Royce Viper Mk 601-22 engine. The AD is needed to prevent failure of the flexible fuel hose due to material deterioration caused by high temperature air impinging on the flexible hose which, in its present location, could result in fire in the engine compartment.

DATES: Effective January 24, 1980. Compliance schedule—as prescribed in body of AD.

ADDRESSES: The applicable service bulletins may be obtained from: Rolls-Royce Limited—Aero Division, Technical Publications Department, P.O. Box 17 Parkside, Coventry CV1 2LZ, England.

Copy of the service bulletin is contained in the Rules Docket, Room, 916, 800 Independence Avenue, S.W., Washington, D.C. 20591.

FOR FURTHER INFORMATION CONTACT: D. C. Jacobsen, Chief, Aircraft Certification Staff, AEU-100, Europe, Africa and Middle East Region, Federal Aviation Administration, c/o American Embassy, Brussels, Belgium, Telephone: 513.38.30, or C. Christie, Chief, Technical Analysis Branch, AWS-110, Federal Aviation Administration, 800 Independence Ave., S.W., Washington, D.C. 20591, Telephone 202-426-8374.

SUPPLEMENTARY INFORMATION: There have been reports of the release of fuel from the flexible fuel hose assembly P/N DX 33-180-300 which connects the electro pressure control and the air fuel ratio control units of the Rolls Royce Viper Mk 601-22 engine and can result in a fire in the engine compartment. The failure is caused by deterioration and cracking of the flexible fuel hose due to the existence of high temperature ambient air in a localized area through which the flexible fuel hose is presently routed.

Since this condition is likely to exist on other engines of the same type design, an airworthiness directive is being issued which requires the replacement of the existing P/N DX 33-180-300 flexible fuel hose by a new flexible fuel hose assembly, P/N V 103813, relocated into an area where high temperature ambient air cannot affect the flexible fuel hose assembly which connects the electro pressure control and the fuel air ratio control units of the Rolls Royce Viper Mk 601-22 engine.

Since a situation exists that requires the immediate adoption of this regulation, it is found that notice and public procedure hereon are impracticable and good cause exists for making this amendment effective in less than 30 days.

Adoption of the Admendment

§ 39.13 [Amended]

Accordingly, pursuant to the authority delgated to me by the Administrator, § 39.13 of Part 39 of the Federal Aviation Regulations (14 CFR Part 39.13) is amended by adding the following new Airworthiness Directive:

Rolls Royce Limited. Applies to Viper Mk 601-22 model engine as installed in, but not limited to, Hawker Siddeley HS 125 series 600A and Beechcraft Hawker Siddeley BH 125 series 600A aircraft.

Compliance is required as indicated unless already accomplished.

To prevent possible failure of the flexible fuel hose, accomplish the following:

(a) Within 250 hours engine time in service after the effective date of this AD, remove the flexible fuel hose assembly, Rolls Royce P/N DX 33-180-300 and install a new flexible fuel hose assembly, Rolls Royce P/N V 103813, in accordance with paragraph 2.A., "Accomplishment Instructions," of Rolls Royce Service Bulletin No. 73-A17, dated June 1978, or an equivalent approved by the Chief, Aircraft Certification Staff, AEU-100, Europe, Africa and Middle East Region, Brussels, Belgium.

(b) Upon request of an operator, an FAA Maintenance Inspector may adjust the compliance time specified in paragraph (a) of this AD to be compartible with that operator's maintenance schedule.

This amendment becomes effective January 24, 1980.

(Secs. 313(a), 601, and 603, Federal Aviation Act of 1958, as amended, (49 U.S.C. 1354(a), 1421, and 1423); Sec. 6(c), Department of Transportation Act (49 U.S.C. 1655(c); 14 CFR 11.89))

Note.—The FAA has determined that this document involves a regulation which is not significant under Executive Order 12044, as implemented by Department of Transportation Regulatory Policies and Procedures (43 FR 11034; February 26, 1979). A copy of the evaluation prepared for this action will be placed in the regulatory docket. A copy of it may be obtained by writing to C. Christie, Chief, Technical Analysis Branch, AWS-110, Federal Aviation Administration, 800 Independence Avenue, S.W., Washington, D.C. 20591.

Issued in Washington, D.C. on December 20, 1979

M. C. Beard,

Director, Office of Airworthiness.

[FR Doc. 80-452 Filed 1-9-80; 8:45 am]

BILLING CODE 4910-13-M

14 CFR Part 39

[Docket No. 79-EA-48; Amdt. 39-3653]

Piper Aircraft; Airworthiness Directives

AGENCY: Federal Aviation Administration (FAA), DOT.

ACTION: Final rule.

SUMMARY: This amendment issues a new airworthiness directive applicable to Piper PA-31T and PA-31T1 type airplanes which requires an inspection of the oil cooler inlet hose, and replacement where necessary. It appears that kinking of the steel braiding within the hose causes oil to leak, which can result in oil loss requiring an in-flight engine shutdown.

EFFECTIVE DATES: January 14, 1980 and upon receipt to addressees of an airmail letter, dated August 8, 1979, on this same matter. Compliance is required as set forth in the AD.

ADDRESSES: Piper Service Bulletins may be acquired from the manufacturer at Piper Aircraft Corporation, 820 East Bald Eagle Street, Lock Haven, Pennsylvania 17745.

FOR FURTHER INFORMATION CONTACT: R. O'Neill, Propulsion Section, AEA-214, Engineering and Manufacturing Branch, Federal Building, J.F.K. International Airport, Jamaica, New York 11430; Tel. 212-995-2894.

SUPPLEMENTARY INFORMATION: There had been reports of failure of the oil cooler inlet hose on the Piper PA-31T and PA-31T1 aircraft. Two of these incidents involved an oil loss, sufficient to necessitate in-flight engine shutdown. It was determined that hoses on which leakage was observed usually displayed kinking of the steel braiding between the midpoint and the 90-degree fitting end. This was due to not maintaining maximum possible bend radius during installation. Thus, inspections of the hose are required.

Since this deficiency can exist or develop in other airplanes of similar type design, an airworthiness directive is being issued requiring repetitive inspections and replacement where necessary and operational limitations. An airworthiness directive was sent to all aircraft owners and operators of record on this same subject by airmail letter.

In view of the air safety problem, notice and public procedure hereon are impractical, and the amendment may be made effective in less than 30 days.

Adoption of the Amendment

Accordingly, and pursuant to the authority delegated to me by the

Administrator, Section 39.13 of the Federal Aviation Regulations (14 CFR 39.13) is amended, by issuing a new airworthiness directive, as follows:

Piper: Applies to Models PA-31T serial numbers 31T-7920001 through 7920068, 7920070 through 7920080; and PA-31T1 serial numbers 31T-7904001 through 7904044.

Compliance required within the next 25 hours of operation as indicated unless already accomplished.

To preclude the necessity of inflight engine shutdown due to oil loss caused by leakage of the oil cooler inlet hose assembly, accomplish the following on each engine:

Remove engine cowlings and remove oil cooler inlet hose, P/N 80026-05. Cap engine outlet immediately upon removal of hose. Remove the band clamp from the 90-degree fitting end of the fire sleeve and pull fire sleeve back as far as possible to inspect steel braiding for kinking. If kinking is found, replace hose. (Note: Kinking will usually be noticed on the steel braiding between the midpoint of the hose and the 90-degree fitting end.)

If no evidence of kinking is found and with band clamp still removed, pressure test hose to 500 psi using dry nitrogen with hose submerged in water. (Note: A suitable pressure test arrangement is to cap both ends of the hose with appropriate AN hardware items, one of which has been drilled and fitted with a Schrader valve.) If leakage is observed, replace hose with a new oil inlet hose, P/N 80026-05. If test indicates no leakage, install new band clamp on fire sleeve. Reinstall tested hose or new hose as required per above instructions. Reinstall support clamp, maintaining the maximum possible bend ratios to prevent kinking of hose, check engine oil supply, and replenish if necessary. Run engine; insure that no oil leaks exist, and reinstall cowling.

Equivalent methods of compliance must be approved by the Chief, Engineering & Manufacturing Branch, Federal Aviation Administration (FAA), Eastern Region. As permitted by FAR 21.197, aircraft may be flown to a base where maintenance required by this airworthiness directive can be accomplished.

Piper Telex F.L. 31-22A dated August 17, 1979, and Emergency Airworthiness Directive dated August 13, 1979, pertain to this subject.

Effective Date: This amendment is effective January 14, 1980, and was effective upon receipt by all addresses of an airmail letter, dated August 13, 1979, on this same matter.

(Secs. 313(a), 601, and 603, Federal Aviation Act of 1958, as amended, 49 U.S.C. 1354(a), 1421, and 1423; Sec. 6(c), Department of Transportation Act, 49 U.S.C. 1655(c); and 14 CFR 11.89.)

Issued in Jamaica, New York, on December 28, 1979.

Murray E. Smith,

Director, Eastern Region.

[FR Doc. 80-608 Filed 1-9-80; 8:45 am]

BILLING CODE 4910-13-M

14 CFR Part 39

[Docket No. 79-NW-44-AD; Amdt. 39-3659]

Airworthiness Directives; Boeing Model 727 Series Airplanes

AGENCY: Federal Aviation Administration (FAA), DOT.

ACTION: Final rule.

SUMMARY: This amendment adopts a new Airworthiness Directive (AD) to require a recurring pressure and air flow test of the Model 727 auxiliary body fuel tank refuel and vent system shrouds. There have been reported two incidents wherein unwanted fuel transfer to the auxiliary tanks has occurred. The cause was defective and damaged shrouds which apparently allowed cabin pressure to enter the cavity between the nonmetallic fuel bladder cell and its supporting enclosure, collapsing the cell which pulled the refuel line from its connector within the tank. The tests and inspections required by this AD will disclose any potential or incipient refuel and vent system shroud failure condition, thus preventing the unwanted fuel transfer situation. The shroud failures and unwanted fuel transfer situation have caused uncontrollable loss of fuel overboard through the main tank vent system, auxiliary fuel tank failures, discharge of fuel vapors and liquid in the wheelwell area creating a potential fire hazard and has the potential, following additional shroud failures, of releasing fuel and fuel vapors into the passenger cabin.

DATES: Effective date: January 22, 1980. Compliance Schedule: As indicated in the text of the AD.

ADDRESSES: The Boeing Service Bulletin and special tools specified in this directive may be obtained upon request to Boeing Commercial Airplane Company, Post Office Box 3707, Seattle, Washington 98124. The document may also be examined at FAA Northwest Region, 9010 East Marginal Way South, Seattle, Washington 98108.

FOR FURTHER INFORMATION CONTACT: Mr. J. M. Walker, Propulsion Section, ANW-214, Engineering and Manufacturing Branch, 9010 East Marginal Way South, Seattle, Washington, 98108, telephone (206) 767-2520.

SUPPLEMENTARY INFORMATION: Two operators have experienced loss of fuel from the auxiliary body fuel tank installed in their Model 727-200 airplanes. In the first incident, which occurred on February 27, 1979, unwanted fuel was noted in the auxiliary tank twice during the flight. The first time the fuel was successfully pumped out of the auxiliary tank. The second time the unwanted fuel transfer happened, the crew was not able to pump the fuel from the auxiliary tank. Inspection revealed that the fuel refuel/feed tube in the auxiliary tank had a flare pullout and was badly bent in the aft direction. The connecting manifold in the auxiliary tank was also bent aft. In the second incident, which occurred on October 1, 1979, the same mode of failure was experienced except fuel vapors and some fuel wetted surfaces were detected in the wheelwell.

The investigation of the first incident revealed the cause to be a differential pressure between the bladder cell cavity and the ullage space in the bladder cell itself. This differential pressure caused the bladder cell to collapse, breaking the supporting lacing and ferrules allowing the bladder cell to wrap around the refuel tube and pushing the tube down causing a flare pullout from the "B" nut connector. The source of pressure high enough to cause this kind of failure is suspected to be cabin pressure, although trapped sea level pressure could cause the same damage as the airplane climbs to higher altitudes. The existence of either source of high pressure is dependent on two or more failures of the shroud design. Cabin pressure can enter the cavity vent shroud anywhere a defect or separation in the shroud construction develops. The investigation of the second incident revealed several fiberglass cloth separations and neoprene liner delaminations providing both a flow path for cabin pressure and blockage of the cavity venting system.

Since this condition is likely to exist and/or develop in other Boeing Model 727 airplanes which have the Boeing designed auxiliary body fuel system installed, action is being taken to require an initial inspection and test, with recurring inspections and tests, which will disclose potential or incipient failure of the refuel line and tank vent line shrouds. Replacement of defective shrouds and recurring inspections of all shrouds will prevent recurrence of the fuel system failures and unwanted fuel transfer.

Since a situation exists that requires immediate adoption of this regulation, it is found that notice and public procedure hereon are impracticable and good cause exists for making this amendment effective in less than 30 days. Terminating action for the recurring inspections is being developed on an expedited basis and the AD will be amended to include this action when approved.

Adoption of the Amendment

Accordingly, pursuant to the authority delegated to me by the Administrator, § 39.13 of the Federal Aviation Regulations (14 CFR 39.13) is amended by adding the following new Airworthiness Directive:

Boeing: Applies to Model 727 series airplanes certificated in all categories which have an operative Boeing designed auxiliary body fuel system installed.

Compliance required within 600 flight hours from the effective date of this AD unless this initial inspection and test has been accomplished within the past 300 flight hours. To prevent failure of the fuel system and unwanted fuel transfer to the auxiliary body fuel tanks, accomplish the following:

A. Inspect and test the auxiliary body fuel tank installation as required and as outlined in Boeing Service Bulletin 727-28-A62 Revision 2 or later FAA approved revisions. If the shrouds are found defective, replace with a serviceable Boeing part or deactivate the system prior to further flight.

B. Repeat the required inspections and tests every 1500 flight hours after the initial inspection unless the system has been deactivated. If shrouds are found defective, replace with a serviceable Boeing part, or deactivate the system prior to further flight.

The recurring inspection interval may be adjusted upon request of the operator. The FAA Maintenance Inspector, subject to prior approval by the Chief, Engineering and Manufacturing Branch, Northwest Region, may adjust the repetitive inspection interval specified in this AD if the request contains substantiating data to justify the increase.

C. Prior to reactivating a previously deactivated auxiliary body fuel system, whether deactivated voluntarily or due to defects found in the auxiliary tank fuel system through inspections and tests accomplished in paragraphs A. and B. above, the auxiliary body fuel system must be repaired as required and shown to meet the requirements of paragraph A. and must be reinspected on a recurring basis per paragraph B.

Terminating action for this AD is being developed. When a suitable action has been developed and approved, this AD will be appropriately amended.

The manufacturer's specifications and procedures identified and described in this directive are incorporated herein and made a part hereof pursuant to 5 U.S.C. 552(a)(1).

All persons affected by this directive who have not already received these documents and special tools from the manufacturer, may obtain same upon request to Boeing Commercial Airplane Company, Post Office Box 3707, Seattle, Washington 98124. The service bulletin may also be examined at FAA Northwest Region, 9010 East Marginal Way South, Seattle, Washington 98108.

This amendment becomes effective January 22, 1980.

(Secs. 313(a), 601, and 603, Federal Aviation Act of 1958, as amended (49 U.S.C. 1354(a), 1421, and 1423) and Section 6(c) of the Department of Transportation Act (49 U.S.C. 1655(c)); and 14 CFR 11.89).

Note.—The FAA has determined that this document involves a regulation which is not considered to be significant under the provisions of Executive Order 12044 as implemented by Department of Transportation Regulatory Policies and Procedures (44 FR 11034; February 26, 1979).

Issued in Seattle, Washington, on January 2, 1980.

C. B. Walk, Jr.,

Director, Northwest Region.

The incorporation by reference provisions in the document were approved by the Director of the Federal Register on June 19, 1967.

[FR Doc. 80-732 Filed 1-9-80; 8:45 am]

BILLING CODE 4910-13-M

---

14 CFR Part 39

[Docket No. 79-NW-45-AD; Amdt. 39-3660]

Airworthiness Directives; Boeing Model 737 Series Airplanes

AGENCY: Federal Aviation Administration (FAA), DOT.

ACTION: Final rule.

SUMMARY: This amendment adopts a new Airworthiness Directive (AD) to require a recurring pressure and air flow test of the Model 737 auxiliary body fuel tank refuel and vent system shrouds. There have been no reports of a problem with the refuel and vent system shrouds on the Model 737 airplanes; however, the auxiliary tank installation is similar and uses the identical shroud material as the Model 727 airplanes which have experienced two incidents of unwanted fuel transfer. The cause was defective and damaged shrouds which apparently allowed cabin pressure to enter the cavity between the nonmetallic fuel bladder cell and its supporting enclosure, collapsing the cell which pulled the refuel line from its connector within the tank. The tests and inspections required by this AD will disclose any potential or incipient refuel and vent system shroud failure conditions thus preventing the unwanted fuel transfer situation. The shroud failures and unwanted fuel transfer situation have caused an uncontrollable loss of fuel overboard through the wing tank vent system, auxiliary fuel tank failure and has the potential, following additional shroud failures, of releasing fuel or fuel vapors into the passenger cabin.

DATES: Effective date: January 22, 1980. Compliance Schedule: As indicated in the text of the AD.

ADDRESSES: The Boeing Service Bulletin and special tools specified in this directive may be obtained upon request to Boeing Commercial Airplane Company, Post Office Box 3707, Seattle, Washington 98124. The document may also be examined at FAA Northwest Region, 9010 East Marginal Way South, Seattle, Washington 98108.

FOR FURTHER INFORMATION CONTACT: Mr. J. M. Walker, Propulsion Section, ANW-214, Engineering and Manufacturing Branch, 9010 East Marginal Way South, Seattle, Washington 98108, telephone (206) 767-2520.

SUPPLEMENTARY INFORMATION: Two operators have experienced loss of fuel from the auxiliary body fuel tank installed in their Model 727-200 airplanes. In the first incident, which occurred on February 27, 1979, unwanted fuel was noted in the auxiliary tank twice during the flight. The first time the fuel was successfully pumped out of the auxiliary tank. The second time the unwanted fuel transfer happened, the crew was not able to pump the fuel from the auxiliary tank. Inspection revealed that the fuel refuel/feed tube in the auxiliary tank had a flare pullout and was badly bent in the aft direction. The connecting manifold in the auxiliary tank was also bent aft. In the second incident which occurred on October 1, 1979, the same mode of failure was experienced except fuel vapors and some fuel wetted surfaces were detected in the wheelwell.

The investigation of the first incident revealed the cause to be a differential pressure between the bladder cell cavity and the ullage space in the bladder cell itself. This differential pressure caused the bladder cell to collapse breaking the supporting lacing and ferrules allowing the bladder cell to wrap around the refuel tube and pushing the tube down causing a flare pullout from the "B" nut connector. The source of pressure sufficiently high enough to cause this kind of failure is suspected to be cabin pressure although trapped sea level pressure could cause the same damage as the airplane climbs to higher altitudes. The existence of either source of high pressure is dependent on two or more failures of the shroud design. Cabin pressure can enter the cavity vent shroud anywhere a defect or separation in the shroud construction develops. The investigation of the second incident revealed several fiberglass cloth separations and neoprene liner delaminations providing both a flow path for cabin pressure and blockage of the cavity venting system.

Since this condition is likely to exist and/or develop in Boeing Model 737 airplanes which have the Boeing designed auxiliary body fuel system installed, action is being taken to require

an initial inspection and test, with recurring inspections and tests, which will disclose potential or incipient failure of the refuel line and tank vent line shrouds. Replacement of defective shrouds and recurring inspections of all shrouds will prevent recurrence of the fuel system failures and unwanted fuel transfer.

Since a situation exists that requires immediate adoption of this regulation, it is found that notice and public procedure hereon are impracticable and good cause exists for making this amendment effective in less than 30 days. Terminating action for the recurring inspections is being developed on an expedited basis and the AD will be amended to include the action when approved.

Adoption of the Amendment

Accordingly, pursuant to the authority delegated to me by the Administrator, Section 39.13 of the Federal Aviation Regulation (14 CFR 39.13) is amended by adding the following new Airworthiness Directive:

Boeing: Applies to Model 737 series airplanes certificated in all categories which have an operative Boeing designed auxiliary body fuel system installed.

Compliance required within 600 flight hours from the effective date of this AD unless this initial inspection and test has been previously accomplished within the past 300 flight hours. To prevent failure of the fuel system and unwanted fuel transfer to the auxiliary body fuel tanks, accomplish the following:

A. Inspect and test the auxiliary body fuel tank installation as required and as outlined in Boeing Service Bulletin 737-28A1032 or later FAA approved revisions. If the shrouds are found defective, replace with a serviceable Boeing part or deactivate the system prior to further flight.

B. Repeat the required inspections and tests every 1,500 flight hours after the initial inspection unless the system has been deactivated. If shrouds are found defective, replace with a serviceable Boeing part or deactivate the system prior to further flight.

The recurring inspection interval may be adjusted upon request of the operator. The FAA Maintenance Inspector, subject to prior approval by the Chief, Engineering and Manufacturing Branch, Northwest Region, may adjust the repetitive inspection interval specified in this AD if the request contains substantiating data to justify the increase.

C. Prior to reactivating a previously deactivated auxiliary body fuel system, whether deactivated voluntarily or due to defects found in the auxiliary tank fuel system through inspections and tests accomplished in paragraphs A. and B. above, the auxiliary body fuel system must be repaired as required and shown to meet the requirements of paragraph A. and must be reinspected on a recurring basis per paragraph B.

Terminating action for this AD is being developed. When a suitable action has been developed and approved, this AD will be appropriately amended.

The manufacturer's specifications and procedures identified and described in this directive are incorporated herein and made a part hereof pursuant to 5 U.S.C. 552(a)(1).

All persons affected by this directive who have not already received these documents and special tools from the manufacturer, may obtain same upon request to Boeing Commercial Airplane Company, Post Office Box 3707, Seattle, Washington 98124. The service bulletin may also be examined at FAA Northwest Region, 9010 East Marginal Way South, Seattle, Washington 98108.

This amendment becomes effective January 22, 1980.

(Secs. 313(a), 601, and 603, Federal Aviation Act of 1958, as amended (49 U.S.C. 1354(a), 1421, and 1423) and Section 6(c) of the Department of Transportation Act (49 U.S.C. 1655(c)); and 14 CFR 11.89)

Note.—The FAA has determined that this document involves a regulation which is not considered to be significant under the provisions of Executive Order 12044 as implemented by Department of Transportation Regulatory Policies and Procedures (44 FR 11034; February 26, 1979).

Issued in Seattle, Washington, on January 2, 1980.

C. B. Walk, Jr.,

Director, Northwest Region.

The incorporation by reference provisions in the document were approved by the Director of the Federal Register on June 19, 1967.

[FR Doc. 80-733 Filed 1-9-80; 8:45 am]

BILLING CODE 4910-13-M

---

14 CFR Part 39

[Docket No. 79-NW-37 AD; Amdt. 39-3658]

Airworthiness Directives; Rockwell NA-265-60 and NA-265-80 Airplanes Modified in Accordance With Raisbeck Group STC SA687NW and STC SA847NW

AGENCY: Federal Aviation Administration (FAA), DOT.

ACTION: Final rule.

SUMMARY: On October 26, 1979 an emergency Airworthiness Directive (AD) was issued and made effective to all known operators of Rockwell NA 265-60 or NA 265-80 airplanes which have been modified in accordance with The Raisbeck Group STC SA687NW or STC SA847NW. This AD required eddy current inspections of critical fastener holes in the flap support structure, the modification of the outboard flap track supports and the imposition of certain operating limitations and a reduced service life. This condition still exists and the AD is hereby published in the Federal Register to make it effective to all persons. In addition, the AD is amended to further reduce the service life for airplane SN 306-116.

DATES: Effective date January 22, 1980. This AD was effective earlier to all recipients of the emergency AD dated October 26, 1979. Initial compliance: As prescribed in the body of the AD.

ADDRESSES: Raisbeck service bulletin specified in this directive may be obtained upon request to The Raisbeck Group, 7777 Perimeter Road, Seattle, Washington 98108.

FOR FURTHER INFORMATION CONTACT: William M. Perrella, Engineering and Manufacturing Branch, FAA Northwest Region, 9010 East Marginal Way South, Seattle, Washington 98108, telephone (206) 767-2516.

SUPPLEMENTARY INFORMATION: During a full scale operational test of the modified Sabreliner wing flap system, a series of premature fatigue failures occurred. At approximately 1,700 flight-by-flight cycles, the inboard gusset plates, which attach the outboard flap track support to the skin, failed at both outboard locations. After approximately 2,000 cycles, a failure occurred on an inboard flap track support. After approximately 6,000 cycles, both halves of one outboard flap track support fitting failed. At this outboard location, failures also occurred in the screws which fasten the gusset plates to the skin. These plates had been replaced with a new design after the first failure at 1,700 cycles. Analysis of the failures indicates that the local strains in the failed parts were more than originally calculated, thus resulting in reduced service lives for the parts. Furthermore, the wing skin stresses at the flap track locations are higher than had been predicted. To assure safe operation, a reduction of the approved service life of modified NA 265-60 airplanes is necessary. Airplane SN 306-116 has a disproportionately high number of flap cycles compared to the total number of flights and is therefore given a reduction in service life.

Since a situation exists that requires immediate adoption of this regulation, it is found that notice and public procedure hereon are impracticable, and good cause exists for making this amendment effective in less than 30 days.

Adoption of the Amendment

Accordingly, pursuant to the authority delegated to me by the Administrator, Section 39.13 of the Federal Aviation Regulations (14 CFR 39.13) is amended

by adding the following new Airworthiness Directive:

Rockwell International: Applies to Rockwell Model NA 265–60 and NA 265–80 airplanes equipped with the Raisbeck Mark Five modification in accordance with STC SA687NW or STC SA847NW. To prevent failure of the wing flap support structure accomplish the following:

A. On or before 430 landings after modification by The Raisbeck Group STC SA687NW, unless already accomplished, replace the outboard flap track support plates in accordance with FAA approved Raisbeck Group Service Bulletin No. 17.

B. If the flap system was previously affected by AD 79–13–02, the number of landings specified in Paragraph A may be increased by the total number of landings accomplished with inoperative flaps.

C. On or before 10 further landings, unless previously accomplished, perform an eddy current inspection of the flap track support structure in accordance with FAA approved Raisbeck Service Bulletin No. 18, Rev. B, on airplanes having the following serial numbers: 306–005, 006, 012, 024, 050, 071, 109, 116, 119, 122, 380–025. For all other serial numbers, perform the above inspection prior to 100 landings after modification by Raisbeck STC SA687NW or STC SA847NW. If cracks are found, immediately inform William M. Perrella, Engineering and Manufacturing Branch, FAA Northwest Region, telephone (206) 767–2516. Before further flight, repair cracks in accordance with a method approved by the Chief, Engineering and Manufacturing Branch, FAA Northwest Region.

D. Effective before further flight, the full flap extension speed is reduced from 180 knots IAS to 160 knots IAS and the 20 degree flap extension speed is reduced from 225 knots IAS to 180 knots IAS. Install a placard in full view of the flight crew which specifies these speeds.

E. The life of the flap track support structure after modification by the Raisbeck Group STC SA687NW or STC SA847NW is limited to 900 landings, except for airplane S/N 306–116 which is limited to 450 landings.

F. Reinspect the flap track support structure for cracks in accordance with FAA approved Raisbeck Service Bulletin No. 18, Rev. B, or methods approved by the Chief, Engineering and Manufacturing Branch, FAA Northwest Region, at intervals not to exceed 100 landings.

G. Alternate modifications which provide an equivalent level of safety may be used when approved by the Chief, Engineering and Manufacturing Branch, FAA Northwest Region.

The manufacturer's specifications and procedures identified and described in this directive are incorporated herein and made a part hereof pursuant to 5 U.S.C. 552(a)(1).

All persons affected by this directive who have not already received these documents from the manufacturer, may obtain copies upon request to The Raisbeck Group, 7777 Perimeter Road, Seattle, Washington 98108.

This amendment becomes effective January 10, 1980 and was effective earlier to all recipients of the emergency AD dated October 26, 1979.

(Secs. 313(1), 601, and 603, Federal Aviation Act of 1958, as amended (49 U.S.C. 1354(a), 1421, and 1423) and Section 6(c) of the Department of Transportation Act (49 U.S.C. 1655(c)); and 14 CFR 11.89)

Note.—The FAA has determined that this document involves a regulation which is not considered to be significant under the provisions of Executive Order 12044 and as implemented by Department of Transportation Regulatory Policies and Procedures (44 FR 11034; February 26, 1979).

Issued in Seattle, Washington, on January 2, 1980.

C. B. Walk, Jr.,

Director, Northwest Region.

The incorporation by reference provisions in the document were approved by the Director of the **Federal Register** on June 19, 1967.

[FR Doc. 80–731 Filed 1–9–80; 8:45 am]

BILLING CODE 4910–13–M

---

14 CFR Part 39

[Docket No. 79–NE–10; Amdt. 39–3654]

Airworthiness Directives; Sikorsky S–76A Series Helicopters Certified in All Categories

AGENCY: Federal Aviation Administration (FAA), DOT.

ACTION: Final rule.

SUMMARY: This amendment changes an existing airworthiness directive (AD), Docket No. 79–20–09, Amendment 39–3582, applicable to Sikorsky S–76A series helicopters certificated in all categories by adding an option to replace the existing NAS 625 stabilizer support fitting attachment bolts with larger NAS 626 bolts. The amendment provides operators relief from replacing the NAS 625 bolts every 100 hours. The new NAS 626 require a 500 hour replacement.

DATES: Effective—January 10, 1980. Compliance schedule—as prescribed in body of AD.

ADDRESSES: The applicable service bulletin may be obtained from Sikorsky Aircraft, Division of United Technologies Corporation, Stratford, Connecticut 06602. A copy of the service bulletin is contained in the Rules Docket at the FAA New England Region Headquarters, Burlington, Massachusetts.

FOR FURTHER INFORMATION CONTACT: Stephen Soltis, Airframe Section, Engineering and Manufacturing Branch, Flight Standards Division, Federal Aviation Administration, New England Region, 12 New England Executive Park, Burlington, Massachusetts 01803; telephone (617) 273–7336.

SUPPLEMENTARY INFORMATION: This notice further amends Amendment 39–3582, 44 FR 57073, AD 79–20–09, as amended by Amendment 39–3621, 44 FR 68445, which currently requires a 100 hour replacement time for the NAS 625 stabilizer support fitting attachment bolts on Sikorsky S–76A aircraft. After issuing Amendment 39–3621, the FAA has determined, based on fatigue calculations, that by installing NAS 626 bolts, replacement time can be increased from 100 hours to 500 hours. Therefore, the FAA is further amending Amendment 39–3582, by permitting the existing stabilizer support fitting attachment bolts to be replaced with a larger diameter bolt thus providing a longer bolt replacement time on Sikorsky S–76A aircraft.

Since this amendment relieves a restriction and imposes no additional burden on any person, notice and public procedure hereon are unnecessary and good cause exists for making the amendment effective in less than 30 days.

Adoption of the Amendment

Accordingly, pursuant to the authority delegated to me by the Administrator, § 39.13 of Part 39 of the Federal Aviation Regulations (14 CFR 39.13) is amended by further amending Amendment 39–3582, 44 FR 57073, AD 79–20–09, as amended by Amendment 39–3621, 44 FR 68445, as follows:

1. By the addition of Subparagraph C to Item 4, "4. Aft Tail Cone Structure," Paragraph III.

C. When accomplishing the attachment change of Paragraph 4IIIB of this AD, the four NAS 625 bolts may be replaced with increased diameter NAS 626 bolts, provided that the inspection, rework, and installation procedures are performed in accordance wi h Sikorsky Service Bulletins 76–55–5, dated December 12, 1979, and 76–55–4B, dated November 30, 1979, and Sikorsky Drawing No. 76080–20047, Revision A.

The NAS 626 bolts with mating nuts and washers are to be removed and replaced with new bolts, nuts, and washers every 500 ho ırs time in service.

All parts showing evidence of cracks, damage and/or insufficient edge material must be repaired in accordance with Paragraph (7) of this AD prior to further f ight.

2. Revise the Note listing Sikorsky references as follows:

Add:

G. Service Bulletin No. 76–55–5, dated December 12, 1979

H. Service Bulletin No. 76–55–4B, dated November 30, 1979

The manufacturer's specifications an d procedures identified and described in this

directive are incorporated herein and made a part hereof pursuant to 5 U.S.C. 552(a)(1). All persons affected by this directive, who have not already received these documents from the manufacturer, may obtain copies upon request to Sikorsky Aircraft, Division of United Technologies Corporation, Stratford, Connecticut 06602. These documents may also be examined at the FAA, New England Region, 12 New England Executive Park, Burlington, Massachusetts, and at FAA Headquarters, 800 Independence Avenue, S.W., Washington, D.C. A historical file on this AD, which includes the incorporated material in full, is maintained by the FAA at its Headquarters in Washington, D.C., and at FAA, New England Region Headquarters, Burlington, Massachusetts.

This amendment becomes effective January 10, 1980.

(Secs. 313(a), 601 and 603, Federal Aviation Act of 1958, as amended, (49 U.S.C 1354(a), 1421, and 1423); Sec. 6(c), Department of Transportation Act (49 U.S.C. 1655(c)); 14 CFR 11.89)

Note.—The FAA has determined that this document involves a regulation which is not considered to be significant under the provisions of Executive Order 12044, as implemented by Department of Transportation Regulatory Policies and Procedures (44 FR 11034; February 26, 1979). A final evaluation on this AD is contained in the docket.

Issued in Burlington, Massachusetts, on December 31, 1979.

Arthur Varnado,

Acting Director, ANE-1.

(The incorporation by reference provisions of this document were approved by the Director of the Federal Register on June 19, 1967.)

[FR Doc. 80-734 Filed 1-9-80; 8:45 am]

BILLING CODE 4910-13-M

---

14 CFR Part 71

[Airspace Docket No. 79-SO-58]

Designation of Control Zone, Gadsden, Ala.; Correction

AGENCY: Federal Aviation Administration (FAA), DOT.

ACTION: Correction to final rule.

SUMMARY: This rule designates the Gadsden, Alabama, Control Zone. The Final Rule published in the Federal Register on December 13, 1979, contained an erroneous effective date. This correction reflects the correct effective date.

EFFECTIVE DATE: January 24, 1980.

ADDRESS: Federal Aviation Administration, Chief, Air Traffic Division, P.O. Box 20636, Atlanta, Georgia 30320.

FOR FURTHER INFORMATION CONTACT: Carl F. Stokoe, Airspace and Procedures Branch, Federal Aviation Administration, P.O. Box 20636, Atlanta, Georgia 30320; telephone: 404-763-7646.

SUPPLEMENTARY INFORMATION: The Final Rule published in the Federal Register on Thursday, December 13, 1979 (44 FR 72104), erroneously stated March 20, 1980, in the effective date section of the docket. This correction reflects the correct effective date of the Final Rule. Since this action is editorial in nature, notice and public procedure hereon are not necessary.

Adoption of the Amendment

Accordingly, Subpart F, § 71.171 (44 FR 353) of Part 71 of the Federal Aviation Regulations (14 CFR 71) is amended, effective 0901 GMT, January 24, 1980, by adding the following:

Gadsden, Ala.

* * * within a 5-mile radius of the Gadsden Municipal Airport (latitude 33°58'26"N., longitude 86°05'28"W.). This control zone is effective during the specific dates and times established at least 24 hours in advance by a Notice to Airmen. The effective date and time will thereafter be continuously published in the Airport/Facility Directory.

(Sec. 307(a) of the Federal Aviation Act of 1958, as amended (49 U.S.C. 1348(a)) and Sec. 6(c) of the Department of Transportation Act (49 U.S.C. 1655(c)))

Note.—The Federal Aviation Administration has determined that this document involves a regulation which is not significant under Executive Order 12044, as implemented by DOT Regulatory Policies and Procedures (44 FR 11034, February 26, 1979). Since this regulatory action involves an established body of technical requirements for which frequent and routine amendments are necessary to keep them operationally current and promote safe flight operations, the anticipated impact is so minimal that this action does not warrant preparation of a regulatory evaluation.

Issued in East Point, Georgia, on December 31, 1979.

Louis J. Cardinali,

Director, Southern Region.

[FR Doc. 80-730 Filed 1-9-80; 8:45 am]

BILLING CODE 4910-13-M

---

14 CFR Part 71

[Airspace Docket No. 79-ASW-57]

Alteration of Control Zone and Transition Area: Roswell, N. Mex.

AGENCY: Federal Aviation Administration (FAA), DOT.

ACTION: Final rule.

SUMMARY: The nature of the action being taken is alteration of the control zone and transition area at Roswell, NM. The intended effect of the action is to release controlled airspace no longer necessary for aircraft executing instrument approach procedures to the Roswell, Industrial Air Center Airport. The circumstance which created the need for the action is the reevaluation of the airspace requirements at Roswell, NM.

EFFECTIVE DATE: March 20, 1980.

FOR FURTHER INFORMATION CONTACT: Manuel R. Hugonnett, Airspace and Procedures Branch, ASW-536, Air Traffic Division, Southwest Region, Federal Aviation Administration, P.O. Box 1689, Fort Worth, Texas 76101; telephone: (817) 624-4911, extension 302.

SUPPLEMENTARY INFORMATION: The airspace requirements for the Roswell Industrial Air Center Airport were reevaluated and it was determined that the existing controlled airspace for the airport was excessive. Reduction of the controlled airspace will not eliminate that required for the protection of aircraft executing instrument approach procedures to the Roswell Industrial Air Center Airport. Since this action releases controlled airspace, circulation and public notice of this action is not considered necessary.

The Rule

This amendment to Subpart F and Subpart G of Part 71 of the Federal Aviation Regulations (14 CFR Part 71) alters the Roswell, NM, control zone and transition area. This action provides controlled airspace for the protection of aircraft executing instrument approach procedures to the Roswell Industrial Air Center Airport and releases unnecessary controlled airspace to the public.

Adoption of the Amendment

Accordingly, pursuant to the authority delegated to me by the Administration, Subpart F and Subpart G of Part 71 of the Federal Aviation Regulations (14 CFR Part 71) as republished (44 FR 353) and (44 FR 442) are amended, effective 0901 GMT, March 20, 1980, as follows:

§ 71.171 [Amended]

In Subpart F, 71.171 (44 FR 353), the Roswell, NM, control zone is altered as follows:

Within a 6-mile radius of the Roswell Industrial Air Center Airport (Latitude 33°17'59"N., Longitude 104°31'48"W.).

§ 71.181 [Amended]

In Subpart G, 71.181 (44 FR 442) the Roswell, NM, transition area is altered as follows:

That airspace extending upward from 700 feet above the surface, within a 9.5-mile radius of the Roswell Industrial Air Center Airport (Latitude 33°17'59"N., Longitude 104°31'48"W.), and within 3.5 miles each side of the 044° bearing from the TOPAN LOM

(Latitude 33°21'54"N., Longitude 104°26'29"W.), extending from the 9.5-mile radius area to 12.5 miles NE of the TOPAN LOM, and within 1.5 miles each side of the Roswell ILS localizer southwest course extending from the 9.5-mile radius area to 9.5 miles SW, and within 3.5 miles each side of the 289° radial of the Roswell VORTAC (Latitude 33°20'15"N., Longitude 104°37'15"W.) extending from the 9.5-mile radius area to 11 miles W of the VORTAC.

(Sec. 307(a), Federal Aviation Act of 1958 (49 U.S.C. 1348(a)); and Sec. 6(c), Department of Transportation Act (49 U.S.C. 1655(c)))

The FAA has determined that this document involves a regulation which is not significant under Executive Order 12044 as implemented by DOT Regulatory Policies and Procedures (44 FR 11034; February 26, 1979). Since this regulatory action involves an established body of technical requirements for which frequent and routine amendments are necessary to keep them operationally current and promote safe flight operations, the anticipated impact is so minimal that this action does not warrant preparation of a regulatory evaluation.

Issued in Fort Worth, Texas, on December 20, 1979.

F. E. Whitfield,

Acting Director, Southwest Region.

[FR Doc. 80-458 Filed 1-9-80; 8:45 am]

BILLING CODE 4910-13-M

---

14 CFR Part 71

[Airspace Docket No. 79-ASW-45]

Alteration of Control Zone and of Transition Area: Victoria, Tex.

AGENCY: Federal Aviation Administration (FAA), DOT.

ACTION: Final rule.

SUMMARY: The nature of the action being taken is to alter the control zone and transition area at Victoria, Tex. The intended effect of the action provides additional controlled airspace for aircraft executing new instrument approach procedures and conforms the remaining controlled airspace to the existing instrument approach procedures at the Victoria Regional Airport. The circumstances which created the need for the action are the establishment of a nonfederal nondirectional radio beacon (NDB) on the airport, new instrument approach procedures to Runway 17 and 30R, and reevaluation of the existing controlled airspace at Victoria, Tex.

EFFECTIVE DATE: March 20, 1980.

FOR FURTHER INFORMATION CONTACT: Manuel R. Hugonnett, Airspace and Procedures Branch (ASW-536), Air Traffic Division, Southwest Region, Federal Aviation Administration, P.O. Box 1689, Fort Worth, Texas 76101; telephone 817-624-4911, extension 302.

SUPPLEMENTARY INFORMATION:

History

On November 5, 1979, a notice of proposed rulemaking was published in the **Federal Register** (44 FR 63548 and 44 FR 63549) stating that the Federal Aviation Administration proposed to alter the Victoria, Tex., control zone and transition area. Interested persons were invited to participate in this rulemaking proceeding by submitting written comments on the proposal to the Federal Aviation Administration. No objections were received to the proposal. Except for editorial changes, this amendment is that proposed in the notice.

The Rule

This amendment to Subpart F and Subpart G of Part 71 of the Federal Aviation Regulations (14 CFR 71) alters the Victoria, Tex., control zone and transition area. This action provides controlled airspace for the protection of aircraft executing instrument approach procedures to the Victoria Regional Airport.

Adoption of the Amendment

Accordingly, pursuant to the authority delegated to me by the Administrator, Subpart F and Subpart G of Part 71 of the Federal Aviation Regulations (14 CFR Part 71) as republished (44 FR 353 and 44 FR 442) is amended, effective 0901 G.m.t., March 20, 1980, as follows.

§ 71.171 [Amended]

In Subpart G, 71.171 (44 FR 353) the Victoria, Tex., control zone is amended as follows:

Victoria, Tex.

Within a 5-mile radius of the Victoria Regional Airport, Victoria, Tex., (latitude 28°51'06.9" N., longitude 96°55'03.7" W.) and within 3.5 miles each side of the Victoria VOR 312° radial extending from the 5-mile radius zone to 10.5 miles northwest of the VOR; within 3 miles each side of the NDB (latitude 28°50'39" N., longitude 96°54'26" W.) 355° and 160° bearings extending from the 5-mile radius zone to 8.5 miles from the NDB.

§ 71.181 [Amended]

Additionally, in Subpart G, 71.181 (44 FR 442) the Victoria, Tex., transition area is amended as follows:

Victoria, Tex.

That airspace extending upward from 700 feet above the surface within a 6.5-mile radius of the Victoria Regional Airport, Victoria, Tex. (latitude 28°51'06.9" N., longitude 96°55'03.7" W.); and within 3.5 miles each side of the Victoria VOR 312° radial extending from the 6.5-mile radius area to 11.5 miles northwest of the VOR; within 3 miles each side of the NDB (latitude 28°50'39" N., longitude 96°54'26" W.) 355° and 160° bearing extending from the 6.5-mile radius to 8.5 miles from the NDB.

(Sec. 307(a), Federal Aviation Act of 1958 (49 U.S.C. 1348(a); and Sec. 6(c), Department of Transportation Act (49 U.S.C. 1655(c)))

The FAA has determined that this document involves a regulation which is not significant under Executive Order 12044, as implemented by DOT Regulatory Policies and Procedures (44 FR 11034; February 26, 1979). Since this regulatory action involves an established body of technical requirements for which frequent and routine amendments are necessary to keep them operationally current and promote safe flight operations, the anticipated impact is so minimal that this action does not warrant preparation of a regulatory evaluation.

Issued in Fort Worth, Tex., on December 20, 1979.

F. E. Whitfield,

Acting Director, Southwest Region.

[FR Doc. 80-457 Filed 1-9-80; 8:45 am]

BILLING CODE 4910-13-M

---

14 CFR Part 71

[Airspace Docket No. 79-SO-61]

Designation of Transition Area, Lafayette, Tenn.

AGENCY: Federal Aviation Administration (FAA), DOT.

ACTION: Final rule.

SUMMARY: This rule designates the Lafayette, Tennessee, Transition Area by lowering the base of controlled airspace in the vicinity of the Lafayette Municipal Airport from 1,200 feet to 700 feet AGL. This action provides necessary airspace for accommodation of Instrument Flight Rule (IFR) operations at Lafayette Municipal Airport.

EFFECTIVE DATE: 0901 GMT, January 24, 1980.

ADDRESS: Federal Aviation Administration, Chief, Air Traffic Division, P.O. Box 20636, Atlanta, Georgia 30320.

FOR FURTHER INFORMATION CONTACT: John W. Schassar, Airspace and Procedures Branch, Federal Aviation Administration, P.O. Box 20636, Atlanta, Georgia 30320; telephone: 404-763-7646.

SUPPLEMENTARY INFORMATION: A Notice of Proposed Rulemaking was published in the **Federal Register** on Thursday, October 18, 1979, (44 FR 60107), which proposed the designation of the

Lafayette, Tennessee, Transition Area and change of the airport operating status from VFR to IFR. This action provides controlled airspace protection for IFR operations at the Lafayette Municipal Airport. No objections were received from this Notice. Accordingly, the airport operating status is changed from VFR to IFR.

§ 71.181 [Amended]

Adoption of the Amendment

Accordingly, Subpart G, § 71.181 (44 FR 442) of Part 71 of the Federal Aviation Regulations (14 CFR 71) is amended, effective 0901 GMT, January 24, 1980, by adding the following:

Lafayette, Tenn.

That airspace extending upward from 700 feet above the surface within a 5.5-mile radius of the Lafayette Municipal Airport (Latitude 36°31'05"N., Longitude 86°03'51"W.); within 3 miles either side of the 012° bearing from the Lafayette Nondirectional Radio Beacon (NDB) (Latitude 36°30'54"N., Longitude 86°03'40"W.) extending from the 5.5-mile radius to 8.5 miles north of the NDB.

(Sec. 307(a) of the Federal Aviation Act of 1958, as amended (49 U.S.C. 1348(a)) and Sec. 6(c) of the Department of Transportation Act (49 U.S.C. 1655(c)))

Note.—The Federal Aviation Administration has determined that this document involves a regulation which is not significant under Executive Order 12044, as implemented by DOT Regulatory Policies and Procedures (44 FR 11034, February 26, 1979). Since this regulatory action involves an established body of technical requirements for which frequent and routine amendments are necessary to keep them operationally current and promote safe flight operations, the anticipated impact is so minimal that this action does not warrant preparation of a regulatory evaluation.

Issued in East Point, Georgia, on December 20, 1979.

Louis J. Cardinali,

Director, Southern Region.

[FR Doc. 80-464 Filed 1-9-80; 8:45 am]

BILLING CODE 4910-13-M

---

14 CFR Part 71

[Airspace Docket No. 79-RM-27]

Establishment of Transition Areas

AGENCY: Federal Aviation Administration (FAA), DOT.

ACTION: Final rule.

SUMMARY: This amendment establishes a 700' and 1,200' transition area at Grafton, North Dakota to provide controlled airspace for aircraft executing the new NDB runway 35 standard instrument approach procedure developed for the Grafton Municipal Airport, Grafton, North Dakota.

EFFECTIVE DATE: 0901 GMT, March 20, 1980.

FOR FURTHER INFORMATION CONTACT: Pruett B. Helm, Operations, Procedures and Airspace Branch, Air Traffic Division, ARM-500, Federal Aviation Administration, Rocky Mountain Region, 10455 East 25th Avenue, Aurora, Colorado 80010; telephone (303) 837-3937.

SUPPLEMENTARY INFORMATION:

History

On Monday, November 5, 1979, the FAA published for comment (44 FR 63550) a proposal to establish a 700' and 1,200' transition area at Grafton, North Dakota. The only comments received as a result of this circular expressed no objections.

The Rule

This amendment to subpart G of Part 71 of the Federal Aviation Regulations (FAR's) establishes a 700' and 1,200' transition area at Grafton, North Dakota to provide controlled airspace for aircraft transitioning from the existing en route structure and navigational aids to execute the new NDB runway 35 standard instrument approach procedure developed for the Grafton Municipal Airport, Grafton, North Dakota.

Drafting Information

The principal authors of this document are Pruett B. Helm, Operations, Procedures and Airspace Branch, Air Traffic Division, and Daniel J. Peterson, Office of Regional Counsel.

Adoption of the Amendment

Accordingly, pursuant to the authority delegated to me by the Administrator, Part 71 of the Federal Aviation Regulations (14 CFR Part 71) is amended effective 0901 GMT, March 20, 1980, as follows:

§ 71.18 [Amended]

By amending subpart G, Section 71.181 (44 FR 442) so as to establish the following transition areas to read:

Grafton, N. Dak.

That airspace extending upward from 700' above the surface within a 6.5 mile radius of the Grafton Municipal Airport, Grafton, North Dakota (latitude 48°24'30" N.; longitude 97°22'00" W.) and within 3 miles each side of the 164° true bearing from the Grafton NDB (latitude 48°24'24" N., longitude 97°22'17" W.) extending from the 6.5 miles radius area to 8.5 miles southeast of the Grafton NDB, and that airspace extending upward from 1,200' above the surface within 5 miles each side of the 200° bearing from the Pembina, North Dakota VORTAC to the Grafton NDB within the State of North Dakota.

(Sec. 307(a) Federal Aviation Act of 1958 as amended (49 U.S.C. 1348(a)); Sec. 6(c), Department of Transportation Act (49 U.S.C. 1655(c); and 14 CFR 11.69)

Note.—The FAA has determined that this document involves a regulation which is not significant under Executive Order 12044, as implemented by DOT Regulatory Policies and Procedures (44 FR 11034; February 26, 1979). Since this regulatory action involves an established body of technical requirements for which frequent and routine amendments are necessary to keep them operationally current and promote safe flight operations, the anticipated impact is so minimal that this action does not warrant preparation of a regulatory evaluation.

Issued in Aurora, Colorado on December 21, 1979.

Isaac H. Hoover,

Acting Director, Rocky Mountain Region.

[FR Doc. 80-463 Filed 1-9-80; 8:45 am]

BILLING CODE 4910-13-M

---

14 CFR Parts 71 and 73

[Airspace Docket No. 79-WE-19]

Establishment of Temporary Restricted Areas and Alteration of Continental Control Area

AGENCY: Federal Aviation Administration (FAA), DOT.

ACTION: Final rule.

SUMMARY: These amendments establish several joint use restricted areas in the vicinity of Edwards Air Force Base, Calif., and in the Nellis Air Force Base, Nev., areas to contain the military joint readiness exercise called Gallant Eagle 80. These actions provide for the safe and efficient use of the navigable airspace by prohibiting unauthorized flight operations of nonparticipating aircraft within the area during the designated period of March 5 to March 14, 1980.

EFFECTIVE DATE: January 17, 1980.

FOR FURTHER INFORMATION CONTACT: Mr. Lewis W. Still, Airspace Regulations Branch (AAT-230), Airspace and Air Traffic Rules Division, Air Traffic Service, Federal Aviation Administration, 800 Independence Avenue, SW., Washington, D.C. 20591; telephone: (202) 426-8525.

SUPPLEMENTARY INFORMATION: On November 13, 1979, the FAA proposed to amend Parts 71 and 73 of the Federal Aviation Regulations (14 CFR Parts 71 and 73) to designate several temporary restricted areas identified as R-2502N, R-2502E, R-2524, and R-2515 in the Edwards Air Force Base, Calif., area, and R-4806, R-4807, R-4808N, R-4808S, and R-4809 in the Nellis Air Force Base,

Nev., area, to contain the military joint readiness exercise called Gallant Eagle 80 (44 FR 65403) and a correction to the proposal was published on November 29, 1979, (44 FR 68481). Since publication of the correction minor adjustments have been made to the dimensions of several restricted areas to assure exact adjoinments without overlap. These adjustments are reflected herein in the description of restricted areas R-2536N, R-2536-O, R-2537A, R-2537B, R-2537C and R-2537D. All these temporary restricted areas are included in the continental control area for the duration of the time of designation. No comments objecting to the proposal were received. Sections 71.151, 73.25 and 73.48 were republished in the **Federal Register** on January 3, 1979, (44 FR 344, 675 and 700).

The Rule

These amendments to Parts 71 and 73 of the Federal Aviation Regulations (14 CFR Parts 71 and 73) designate temporary restricted areas in the vicinity of Edwards Air Force Base, Calif., and Nellis Air Force Base, Nev., in order to protect nonparticipating aircraft during the time that Gallant Eagle 80 defense readiness exercise is in operation. Also, the airspace at and above 14,500 feet MSL within these temporary restricted areas during the designated period is included in the Continental Control Area. This rule needs to be effective by January 17, 1980, to meet the next scheduled charting cycle. Since the temporary restricted areas are used in March 1980, good cause exists for making this rule effective in less than 30 days.

Adoption of the Amendment

Accordingly, pursuant to the authority delegated to me by the Administrator, Parts 71 and 73 of the Federal Aviation Regulations (14 CFR Parts 71 and 73) as republished (44 FR 344, 675 and 700) are amended, effective 0901 GMT, January 17, 1980, as follows:

§ 71.151 [Amended].

Under § 71.151 the following temporary restricted areas are added for the duration of their time of designation from 0001 March 5 to 0001 PST March 14, 1980.

R-4806 Gallant Eagle 80, Calif.; R-4807 Gallant Eagle 80, Calif.; R-4808N Gallant Eagle 80, Calif.; R-4809 Gallant Eagle 80, Calif.; R-4819F Gallant Eagle 80, Calif.; R-4819G Gallant Eagle 80, Calif.; R-4819H Gallant Eagle 80, Calif.; R-4819I Gallant Eagle 80, Calif.; R-4819J Gallant Eagle 80, Calif.; R-2524 Gallant Eagle 80, Calif.; R-2536K Gallant Eagle 80, Calif.; R-2536M Gallant Eagle 80, Calif.; R-2537B Gallant Eagle 80, Calif.; R-2537C Gallant Eagle 80, Calif.; R-2537D Gallant Eagle 80, Calif.

§ 73.25 [Amended]

Under Section 73.25 (44 FR 675) the following temporary restricted areas are added:

R-4806 Gallant Eagle 80

Boundaries. Beginning at lat. 37°17'00" N., long. 115°18'00" W.; to lat. 36°26'00" N., long. 115°18'00" W.; to lat. 36°26'00" N., long. 115°23'00" W.; to lat. 36°35'00" N., long. 115°37'00" W.; to lat. 36°35'00" N., long. 115°53'00" W.; to lat. 36°36'00" N., long. 115°56'00" W.; to lat. 37°06'00" N., long. 115°56'00" W.; to lat. 37°06'00" N., long. 115°35'00" W.; to lat. 37°17'00" N., long. 115°35'00" W.; to point of beginning.
Designated altitudes. Surface up to and including FL 500.
Time of designation. Continuous 0001 March 5 to 0001 PST March 14, 1980.
Controlling agency. Federal Aviation Administration, Los Angeles ARTC Center.
Using agency. U.S. Air Force Tactical Air Command/USAF Readiness Command (TAC/USAFRED), Langley Air Force Base, Va. 23665.

R-4807 Gallant Eagle 80

Boundaries. Beginning at lat. 36°51'00" N., long. 116°33'30" W.; to lat. 37°26'30" N., long. 117°04'30" W.; to lat. 37°53'00" N., long. 117°01'00" W.; to lat. 37°53'00" N., long. 116°55'00" W.; to lat. 37°47'00" N., long. 116°55'00" W.; to lat. 37°33'00" N., long. 116°43'00" W.; to lat. 37°33'00" N., long. 116°26'00" W.; to lat. 37°33'00" N., long. 116°26'00" W.; to lat. 37°53'00" N., long. 116°11'00" W.; to lat. 37°42'00" N., long. 116°11'00" W.; to lat. 37°42'00" N., long. 115°53'00" W.; to lat. 37°33'00" N., long. 115°53'00" W.; to lat. 37°33'00" N., long. 115°48'00" W.; to lat. 37°28'00" N., long. 115°48'00" W.; to lat. 37°28'00" N., long. 116°00'00" W.; to lat. 37°16'00" N., long. 116°00'00" W.; to lat. 37°16'00" N., long. 116°34'00" W.; to point of beginning.
Designated altitudes. Surface up to and including FL 500.
Time of designation. Continuous 0001 March 5 to 0001 PST March 14, 1980.
Controlling agency. Federal Aviation Administration, Los Angeles ARTC Center.
Using agency. U.S. Air Force Tactical Air Command/USAF Readiness Command (TAC/USAFRED), Langley Air Force Base, Va. 23665.

R-4808N Gallant Eagle 80

Boundaries. Beginning at lat. 36°41'00" N., long. 115°56'00" W.; to lat. 36°41'00" N., long. 116°14'45" W.; to lat. 36°46'00" N., long. 116°26'30" W.; to lat. 36°51'00" N., long. 116°26'30" W.; to lat. 36°51'00" N., long. 116°33'30" W.; to lat. 37°16'00" N., long. 116°34'00" W.; to lat. 37°16'00" N., long. 116°00'00" W.; to lat. 37°28'00" N., long. 116°00'00" W.; to lat. 37°28'00" N., long. 115°35'00" W.; to lat. 37°06'00" N., long. 115°35'00" W.; to lat. 37°06'00" N., long. 115°56'00" W.; to point of beginning.
Designated altitudes. Surface up to and including FL 500.
Time of designation. Continuous, 0001 March 5 to 0001 PST March 14, 1980.
Controlling agency. Federal Aviation Administration, Los Angeles ARTC Center.
Using agency. U.S. Air Force Tactical Air Command/USAF Readiness Command (TAC/USAFRED), Langley Air Force Base, Va. 23665.

R-4808S Gallant Eagle 80

Boundaries. Beginning at lat. 36°46'00" N., long. 116°26'30" W.; to lat. 36°41'00" N., long. 116°14'45" W.; to lat. 36°41'00" N., long. 116°26'30" W.; to point of beginning.
Designated altitudes. Surface up to and including FL 500.
Time of designation. Continuous, 0001 March 5 to 0001 PST March 14, 1980.
Controlling agency. Federal Aviation Administration, Los Angeles ARTC Center.
Using agency. U.S. Air Force Tactical Air Command/USAF Readiness Command (TAC/USAFRED), Langley Air Force Base, Va. 23665.

R-4809 Gallant Eagle 80

Boundaries. Beginning at lat. 37°53'00" N., long. 116°26'00" W.; to lat. 37°33'00" N., long. 116°26'00" W.; to lat. 37°33'00" N., long. 116°43'00" W.; to lat. 37°47'00" N., long. 116°55'00" W.; to lat. 37°53'00" N., long. 116°55'00" W.; to point of beginning.
Designated altitudes. Surface up to and including FL 500.
Time of designation. Continuous, 0001 March 5 to 0001 PST March 14, 1980.
Controlling agency. Federal Aviation Administration, Los Angeles ARTC Center.
Using agency. U.S. Air Force Tactical Air Command/USAF Readiness Command (TAC/USAFRED), Langley Air Force Base, Va. 23665.

R-4819F Gallant Eagle 80

Boundaries. Beginning at lat. 37°53'00" N., long. 116°11'00" W.; to lat. 37°58'00" N., long. 115°00'00" W.; to lat. 38°01'00" N., long. 114°12'00" W.; to lat. 37°53'00" N., long. 113°39'00" W.; to lat. 37°28'00" N., long. 114°00'00" W.; to lat. 36°43'00" N., long. 114°36'00" W.; to lat. 36°43'00" N., long. 115°03'00" W.; to lat. 36°26'00" N., long. 115°18'00" W.; thence along the eastern and northern boundaries of R-4806, R-4808N and R-4807 to point of beginning, (corresponds to Desert MOA).
Designated altitudes. 100' AGL up to and including FL 500 (1200' AGL minimum altitude within 3 NM radius of Lincoln County and Pioche Airports).
Time of designation. Continuous, 0001 March 5 to 0001 PST March 14, 1980.
Controlling agency. Federal Aviation Administration, Los Angeles ARTC Center.
Using agency. U.S. Air Force Tactical Air Command/USAF Readiness Command (TAC/USAFRED), Langley Air Force Base, Va. 23665.

R-4819G Gallant Eagle 80

Boundaries. Beginning at lat. 36°43'00" N., long. 115°03'00" W.; to lat. 36°43'00" N., long. 114°36'00" W.; to lat. 36°26'00" N., long. 114°49'30" W.; to lat. 36°26'00" N., long. 115°18'00" W.; to point of beginning.
Designated altitudes. 16,000 feet MSL up to and including FL 500.
Time of designation. Continuous, 0001 March 5 to 0001 PST March 14, 1980.
Controlling agency. Federal Aviation Administration, Los Angeles ARTC Center.

Using agency. U.S. Air Force Tactical Air Command/USAF Readiness Command (TAC/USAFRED), Langley Air Force Base, Va. 23665.

R-4819H Gallant Eagle 80

Boundaries. Beginning at lat. 36°41'00" N., long. 116°26'30" W.; thence along the southern boundaries of R-4808S and R-4808N and the western and southern boundaries of R-4806 to lat. 36°26'00" N., long. 115°23'00" W.; to lat. 36°16'20" N., long. 115°40'00" W.; to lat. 36°26'00" N., long. 116°03'30" W.; to point of beginning.

Designated altitudes. 100' AGL up to and including FL 280.

Time of designation. Continuous, 0001 March 5 to 0001 PST March 14, 1980.

Controlling agency. Federal Aviation Administration, Los Angeles ARTC Center.

Using agency. U.S. Air Force Tactical Air Command/USAF Readiness Command (TAC/USAFRED), Langley Air Force Base, Va. 23665.

R-4819I Gallant Eagle 80

Boundaries. Beginning at lat. 36°16'20" N., long. 115°40'00" W.; to lat. 36°26'00" N., long. 115°23'00" W.; to lat. 36°26'00" N., long. 114°49'30" W.; to lat. 36°13'40" N., long. 115°05'00" W.; to point of beginning.

Designated altitudes. 16,000' MSL up to and including FL 230.

Time of designation. Continuous, 0001 March 5 to 0001 PST March 14, 1980.

Controlling agency. Federal Aviation Administration, Los Angeles ARTC Center.

Using agency. U.S. Air Force Tactical Air Command/USAF Readiness Command (TAC/USAFRED), Langley Air Force Base, Va. 23665.

R-4819J Gallant Eagle 80

Boundaries. Beginning at lat. 36°51'00"N., long. 116°33'30"W.; thence along the southern and western boundaries of R-4808N and the western boundary of R-4808S to lat. 36°41'00" N., long. 116°26'30" W.; to point of beginning.

Designated altitudes. 100' AGL up to and including FL 500.

Time of designation. Continuous, 0001 March 5 to 0001 PST March 14, 1980.

Controlling agency. Federal Aviation Administration, Los Angeles ARTC Center.

Using agency. U.S. Air Force Tactical Air Command/USAF Readiness Command (TAC/USAFRED), Langley Air Force Base, Va. 23665.

R-2502N Gallant Eagle 80

Boundaries. Beginning at lat. 35°37'45" N., long. 116°29'40" W.; to lat. 35°34'30" N., long. 116°29'40" W.; to lat. 35°34'30" N., long. 116°23'30" W.; to lat. 35°28'35" N., long. 116°18'45" W.; to lat. 35°10'25" N., long. 116°42'15" W.; to lat. 35°08'50" N., long. 116°48'40" W.; to lat. 35°10'00" N., long. 116°49'00" W.; to lat. 35°19'00" N., long. 116°49'00" W.; to lat. 35°19'00" N., long. 116°55'20" W.; to lat. 35°37'45" N., long. 116°55'20" W.; to point of beginning.

Designated altitudes. Surface up to and including FL 280.

Time of designation. Continuous, 0001 March 5 to 0001 PST March 14, 1980.

Controlling agency. Federal Aviation Administration, Los Angeles ARTC Center.

Using agency. U.S. Air Force Tactical Air Command/USAF Readiness Command (TAC/USAFRED), Langley Air Force Base, Va. 23665.

R-2502E Gallant Eagle 80

Boundaries. Beginning at lat. 35°28'35" N., long. 116°18'45" W.; to lat. 35°18'45" N., long. 116°18'45" W.; to lat. 35°07'00" N., long. 116°34'00" W.; to lat. 35°07'00" N., long. 116°47'45" W.; to lat. 35°08'50" N., long. 116°48'40" W.; to lat. 35°10'25" N., long. 116°42'15" W.; to point of beginning.

Designated altitudes. Surface up to and including FL 280.

Time of designation. Continuous, 0001 March 5 to 0001 PST March 14, 1980.

Controlling agency. Federal Aviation Administration, Los Angeles ARTC Center.

Using agency. U.S. Air Force Tactical Air Command/USAF Readiness Command (TAC/USAFRED), Langley Air Force Base, Va. 23665.

R-2524 Gallant Eagle 80

Boundaries. Beginning at lat. 35°47'46" N., long. 116°55'20" W.; to lat. 35°15'56" N., long. 116°55'20" W.; to lat. 35°15'56" N., long. 117°16'52" W.; to lat. 35°25'00" N., long. 117°16'52" W.; to lat. 35°25'00" N., long. 117°26'00" W.; to lat. 35°36'00" N., long. 117°26'00" W.; to lat. 35°36'00" N., long. 117°16'52" W.; to lat. 35°47'46" N., long. 117°16'52" W.; to point of beginning.

Designated altitudes. Surface up to and including FL 280.

Time of designation. Continuous, 0001 March 5 to 001 PST March 14, 1980.

Controlling agency. Federal Aviation Administration, Los Angeles ARTC Center.

Using agency. U.S. Air Force Tactical Air Command/USAF Readiness Command (TAC/USAFRED), Langley Air Force Base, Va. 23665.

R-2536K Gallant Eagle 80

Boundaries. Beginning at lat. 37°05'00" N., long. 117°15'30" W.; to lat. 36°30'00" N., long. 116°55'00" W.; to lat. 36°30'00" N., long. 116°47'00" W.; to lat. 36°06'00" N., long. 116°18'00" W.; to lat. 35°39'00" N., long. 115°53'00" W.; to lat. 35°18'45" N., long. 116°18'45" W.; thence along the eastern and northern boundaries of R-2502E, R-2502 N and R-2524 to 35°47'46" N., long. 117°12'00" W.; to lat. 36°30'00" N., long. 117°12'00" W.; to point of beginning.

Designated altitudes. 200' AGL up to and including FL 280 (3,000' minimum altitude over Death Valley National Monument).

Time of designation. Continuous 0001 March 5 to 0001 PST March 14, 1980.

Controlling agency. Federal Aviation Administration, Los Angeles ARTC Center.

Using agency. U.S. Air Force Tactical Air Command/USAF Readiness Command (TAC/USAFRED), Langley Air Force Base, Va. 23665.

R-2536L Gallant Eagle 80

Boundaries. Beginning at lat. 35°39'00" N., long. 115°53'00" W.; to lat. 35°32'16" N., long. 115°46'35" W.; to lat. 35°02'00" N., long. 116°37'30" W.; to lat. 35°01'20" N., long. 116°41'00" W.; to point of beginning.

Designated altitudes. 200' AGL up to and including 9,000' MSL.

Time of designation. Continuous 0001 March 5 to 0001 PST March 14, 1980.

Controlling agency. Federal Aviation Administration, Los Angeles ARTC Center.

Using agency. U.S. Air Force Tactical Air Command/USAF Readiness Command (TAC/USAFRED), Langley Air Force Base, Va. 23665.

R-2536M Gallant Eagle 80

Boundaries. Beginning at lat. 35°07'00" N., long. 116°34'00" W.; to lat. 35°01'20" N., long. 116°41'00" W.; to lat. 34°56'20" N., long. 117°09'00" W.; thence along the eastern boundary of R-2515 and the southern boundary of R-2502E to point of beginning.

Designated altitudes. 200' AGL up to and including FL 280.

Time of designation. Continuous 0001 March 5 to 0001 PST March 14, 1980.

Controlling agency. Federal Avaiation Administration, Los Angeles ARTC Center.

Using agency. U.S. Air Force Tactical Air Command/USAF Readiness Command (TAC/USAFRED), Langley Air Force Base, Va. 23665.

R-2536N Gallant Eagle 80

Boundaries. Beginning at Lat. 35°16'00" N., Long. 117°07'30" W.; thence along the southern and western boundaries of R-2524 and R-2502N to Lat. 35°10'00" N., Long. 116°49'00" W.; to Lat. 35°06'30" N., Long. 116°58'40" W.; to point of beginning.

Designated altitudes. Surface up to and including 4,500 feet MSL.

Time of designation. Continuous 0001 March 5 to 0001 PST March 14, 1980.

Controlling agency. Federal Aviation Administration, Los Angeles ARTC Center.

Using agency. U.S. Air Force Tactical Air Command/USAF Readiness Command (TAC/USAFRED), Langley Air Force Base, VA. 23665.

R-2536-0 Gallant Eagle 80

Boundaries. Beginning at Lat. 35°16'00" N., Long. 117°07'30" W.; thence along the southern and western boundaries of R-2524 and R-2502N to Lat. 35°10'00" N., Long. 116°49'00" W.; to Lat. 35°06'30" N., Long. 116°58'40" W.; to point of beginning.

Designated altitudes. 7,000 feet MSL up to and including 8,000 feet MSL.

Time of designation. Continuous 0001 March 5 to 0001 PST March 14, 1980.

Controlling agency. Federal Aviation Administration, Los Angeles ARTC Center.

Using agency. U.S. Air Force Tactical Air Command/USAF Readiness Command (TAC/USAFRED), Langley Air Force Base, VA. 23665.

R-2537A Gallant Eagle 80

Boundaries. Beginning at Lat. 37°05'00" N., Long. 117°15'30" W.; to Lat. 37°26'30" N., Long. 117°04'30" W.; to Lat. 36°51'00" N., Long. 116°33'30" W.; to Lat. 36°51'00" N., Long. 116°26'30" W.; to Lat. 36°41'00" N., Long. 116°26'30" W.; to Lat. 36°26'00" N., Long. 116°03'00" W.; to Lat. 36°21'15" N., Long. 115°52'00" W.; to Lat. 36°18'00" N., Long. 115°40'00" W.; to Lat. 35°54'00" N., Long. 116°07'30" W.; to Lat. 36°06'00" N., Long. 116°18'00" W.; to Lat. 36°30'00" N., Long. 116°47'00" W.; to Lat. 36°30'00" N., Long. 116°55'00" W.; to point of beginning.

Designated altitudes. 3,000 feet AGL up to and including 11,000 feet MSL.
Time of designation. Continuous 0001 March 5 to 0001 PST March 14, 1980.
Controlling agency. Federal Aviation Administration, Los Angeles ARTC Center.
Using agency. U.S. Air Force Tactical Air Command/USAF Readiness Command (TAC/USAFRED), Langley Air Force Base, VA. 23665.

R-2537B Gallant Eagle 80

Boundaries. Beginning at Lat. 37°05'00" N., Long. 117°15'30" W.; to Lat. 37°26'30" N., Long. 117°04'30" W.; to Lat. 36°51'00" N., Long. 116°33'30" W.; to Lat. 36°51'00" N., Long. 116°26'30" W.; to Lat. 36°41'00" N., Long. 116°26'30" W.; to Lat. 36°26'00" N., Long. 116°03'00" W.; to Lat. 36°18'00" N., Long. 115°40'00" W.; to Lat. 35°54'00" N., Long. 116°07'30" W.; to Lat. 36°02'45" N., Long. 116°15'00" W.; to Lat. 36°06'00" N., Long. 116°18'00" W.; to Lat. 36°30'00" N., Long. 116°47'00" W.; to Lat. 36°30'00" N., Long. 116°55'00" W.; to point of beginning.
Designated altitudes. 15,000 feet AGL up to and including FL 180.
Time of designation. Continuous 0001 March 5 to 0001 PST March 14, 1980.
Controlling agency. Federal Aviation Administration, Los Angeles ARTC Center.
Using agency. U.S. Air Force Tactical Air Command/USAF Readiness Command (TAC/USAFRED), Langley Air Force Base, VA. 23665.

R-2537C Gallant Eagle 80

Boundaries. Beginning at Lat. 37°05'00" N., Long. 117°15'30" W.; to Lat. 37°26'30" N., Long. 117°04'30" W.; to Lat. 36°51'00" N., Long. 116°33'30" W.; to Lat. 36°51'00" N., Long. 116°26'30" W.; to Lat. 36°41'00" N., Long. 116°26'30" W.; to Lat. 36°26'00" N., Long. 116°03'00" W.; to Lat. 36°21'15" N., Long. 115°52'00" W.; to Lat. 36°02'45" N., Long. 116°15'00" W.; to Lat. 36°06'00" N., Long. 116°18'00" W.; to Lat. 36°30'00" N., Long. 116°47'00" W.; to Lat. 36°30'00" N., Long. 116°55'00" W.; to point of beginning.
Designated altitudes. FL 190 up to and including FL 210.
Time of designation. Continuous 0001 March 5 to 0001 PST March 14, 1980.
Controlling agency. Federal Aviation Administration, Los Angeles ARTC Center.
Using agency. U.S. Air Force Tactical Air Command/USAF Readiness Command (TAC/USAFRED), Langley Air Force Base, VA. 23665.

R-2537D Gallant Eagle 80

Boundaries. Beginning at Lat. 37°05'00" N., Long. 117°15'30" W.; to Lat. 37°26'30" N., Long. 117°04'30" W.; to Lat. 36°51'00" N., Long. 116°33'30" W.; to Lat. 36°51'00" N., Long. 116°26'30" W.; to Lat. 36°41'00" N., Long. 116°26'30" W.; to Lat. 36°26'00" N., Long. 116°03'00" W.; to Lat. 36°21'15" N., Long. 115°52'00" W.; to Lat. 36°18'00" N., Long. 115°40'00" W.; to Lat. 35°54'00" N., Long. 116°07'30" W.; to Lat. 36°02'45" N., Long. 116°15'00" W.; to Lat. 36°06'00" N., Long. 116°18'00" W.; to Lat. 36°30'00" N., Long. 116°47'00" W.; to Lat. 36°30'00" N., Long. 116°55'00" W.; to point of beginning.
Designated altitudes. FL 270 up to and including FL 280.
Time of designation. Continuous 0001 March 5 to 0001 PST March 14, 1980.
Controlling agency. Federal Aviation Administration, Los Angeles ARTC Center.
Using agency. U.S. Air Force Tactical Air Command/USAF Readiness Command (TAC/USAFRED), Langley Air Force Base, VA. 23665.

(Secs. 307(a) and 313(a), Federal Aviation Act of 1958 (49 U.S.C. 1348(a) and 1354(a)); Sec. 6(c), Department of Transportation Act (49 U.S.C. 1655(c)); and 14 CFR 11.69)

The FAA has determined that this document involves a regulation which is not significant under Executive Order 12044, as implemented by DOT Regulatory Policies and Procedures (44 FR 11034; February 26, 1979). Since this regulatory action involves an established body of technical requirements for which frequent and routine amendments are necessary to keep them operationally current and promote safe flight operations, the anticipated impact is so minimal that this action does not warrant preparation of a regulatory evaluation.

Issued in Washington, D.C. on December 28, 1979.

William E. Broadwater,

Chief, Airspace and Air Traffic Rules Division.

[FR Doc. 80-461 Filed 1-9-80; 8:45 am]

BILLING CODE 4910-13-M

14 CFR Part 97

[Docket No. 19933; Amdt. No. 1155]

Standard Instrument Approach Procedures; Miscellaneous Amendments

AGENCY: Federal Aviation Administration (FAA), DOT.

ACTION: Final rule.

SUMMARY: This amendment establishes, amends, suspends, or revokes Standard Instrument Approach Procedures (SIAPs) for operations at certain airports. These regulatory actions are needed because of the adoption of new or revised criteria, or because of changes occurring in the National Airspace System, such as the commissioning of new navigational facilities, addition of new obstacles, or changes in air traffic requirements. These changes are designed to provide safe and efficient use of the navigable airspace and to promote safe flight operations under instrument flight rules at the affected airports.

DATES: An effective date for each SIAP is specified in the amendatory provisions.

ADDRESSES: Availability of matters incorporated by reference in the amendment is as follows:

For Examination—1. FAA Rules Docket, FAA Headquarters Building, 800 Independence Avenue, SW., Washington, D.C. 20591;

2. The FAA Regional Office of the region in which the affected airport is located; or

3. The Flight Inspection Field Office which originated the SIAP.

For Purchase—Individual SIAP copies may be obtained from:

1. FAA Public Information Center (APA-430), FAA Headquarters Building, 800 Independence Avenue, SW., Washington, D.C. 20591; or

2. The FAA Regional Office of the region in which the affected airport is located.

By Subscription—Copies of all SIAPs, mailed once every 2 weeks, may be ordered from Superintendent of Documents, U.S. Government Printing Office, Washington, D.C. 20402. The annual subscription price is $135.00.

FOR FURTHER INFORMATION CONTACT: Gary W. Wirt, Flight Procedures and Airspace Branch (AFO-730), Aircraft Programs Division, Office of Flight Operations, Federal Aviation Administration, 800 Independence Avenue, SW., Washington, D.C. 20591; telephone (202) 426-8277.

SUPPLEMENTARY INFORMATION: This amendment to Part 97 of the Federal Aviation Regulations (14 CFR Part 97) prescribes new, amended, suspended, or revoked Standard Instrument Approach Procedures (SIAPs). The complete regulatory description of each SIAP is contained in official FAA form documents which are incorporated by reference in this amendment under 5 U.S.C. § 552(a), 1 CFR Part 51, and § 97.20 of the Federal Aviation Regulations (FARs). The applicable FAA Forms are identified as FAA Forms 8260-3, 8260-4 and 8260-5. Materials incorporated by reference are available for examination or purchase as stated above.

The large number of SIAPs, their complex nature, and the need for a special format make their verbatim publication in the **Federal Register** expensive and impractical. Further, airmen do not use the regulatory text of the SIAPs but refer to their graphic depiction on charts printed by publishers of aeronautical materials. Thus, the advantages of incorporation by reference are realized and publication of the complete description of each SIAP contained in FAA form document is unnecessary. The provisions of this amendment state the

affected CFR (and FAR) sections, with the types and effective dates of the SIAPs. This amendment also identifies the airport, its location, the procedure identification and the amendment number.

This amendment to Part 97 is effective on the date of publication and contains separate SIAPs which have compliance dates stated as effective dates based on related changes in the National Airspace System or the application of new or revised criteria. Some SIAP amendments may have been previously issued by the FAA in a National Flight Data Center (FDC) Notice to Airmen (NOTAM) as an emergency action of immediate flight safety relating directly to published aeronautical charts. The circumstances which created the need for some SIAP amendments may require making them effective in less than 30 days. For the remaining SIAPs, an effective date at least 30 days after publication is provided.

Further, the SIAPs contained in this amendment are based on the criteria contained in the U.S. Standard for Terminal Instrument Approach Procedures (TERPs). In developing these SIAPs, the TERPs criteria were applied to the conditions existing or anticipated at the affected airports. Because of the close and immediate relationship between these SIAPs and safety in air commerce, I find that notice and public procedure before adopting these SIAPs is unnecessary, impracticable, or contrary to the public interest and, where applicable, that good cause exists for making some SIAPs effective in less than 30 days.

Adoption of the Amendment

Accordingly, pursuant to the authority delegated to me, Part 97 of the Federal Aviation Regulations (14 CFR Part 97) is amended by establishing, amending, suspending, or revoking Standard Instrument Approach Procedures, effective at 0901 G.m.t. on the dates specified, as follows:

1. By amending § 97.23 VOR-VOR/DME SIAPs identified as follows:

** * * Effective March 20, 1980*

Lexington, KY—Blue Grass, VOR-A, Amdt. 2

** * * Effective February 21, 1980*

Hamilton, AL—Marion County, VOR Rwy 18, Amdt. 4
Deland, FL—Deland Muni/Sidney H. Taylor Field, VOR Rwy 23, Original
Deland, FL—Deland Muni/Sidney H. Taylor Field, VOR-A, Amdt. 3, cancelled
Burlington, IA—Burlington Muni., VOR Rwy 30, Amdt. 7
Burlington, IA—Burlington Muni., VOR/DME Rwy 12, Original
Ashland, KY—Ashland-Boyd County, VOR Rwy 10, Amdt. 5
Frankfort, KY—Capital City, VOR Rwy 6, Amdt. 4
Frankfort, KY—Capital City, VOR Rwy 24, Amdt. 5
Mt. Sterling, KY—Mt. Sterling-Montgomery County, VOR Rwy 7, Amdt. 1
Mt. Sterling, KY—Mt. Sterling-Montgomery County, VOR/DME Rwy 7, Amdt. 2
Springfield, KY—Lebanon-Springfield, VOR/DME Rwy 11, Amdt. 1
Leonardtown, MD—St. Marys County, VOR Rwy 11, Original
Ironwood, MI—Gogebic County, VOR Rwy 9, Amdt. 9
Ironwood, MI—Gogebic County, VOR/DME Rwy 27, Amdt. 5
Troy, MI—Oakland-Troy, VOR-A, Original
Norfolk, NE—Karl Stefan Memorial, VOR Rwy 19, Amdt. 2
Clinton, OK—Clinton-Sherman, VOR Rwy 35L, Amdt. 4
Midland, VA—Warrenton-Fauquier, VOR Rwy 14, Amdt. 2

** * * Effective December 28, 1979*

Westminster, MD—Clearview Airpark, VOR-A, Amdt. 2

2. By amending § 97.25 SDF-LOC-LDA SIAPs identified as follows:

** * * Effective February 21, 1980*

Batesville, AR—Batesville Regional, SDF Rwy 7, Amdt. 3
Melbourne, FL—Melbourne Regional, LOC (BC) Rwy 27, Amdt. 3
Ashland, KY—Ashland-Boyd County, SDF Rwy 10, Amdt. 1
Clinton, OK—Clinton-Sherman, LOC BC Rwy 17R, Amdt. 3, cancelled

** * * Effective January 24, 1980*

Port Angeles, WA—William R. Fairchild Intl, LOC Rwy 8, Original

3. By amending § 97.27 NDB/ADF SIAPs identified as follows:

** * * Effective March 20, 1980*

Lexington, KY—Blue Grass, NDB Rwy 4, Amdt. 12

** * * Effective February 21, 1980*

Deland, FL—Deland Muni-Sidney H. Taylor Field, NDB Rwy 23, Amdt. 4, cancelled
Deland, FL—Deland Muni-Sidney H. Taylor Field, NDB Rwy 30, Original
Burlington, IA—Burlington Muni., NDB Rwy 36, Amdt. 4
Oskaloosa, IA—Oskaloosa Muni., NDB Rwy 22, Original
Danville, KY—Goodall Field, NDB-A, Amdt. 1
Frankfort, KY—Capital City, NDB Rwy 24, Amdt. 6
Sturgis, KY—Sturgis Muni., NDB Rwy 36, Amdt. 2
Troy, MI—Oakland-Troy, NDB-A, Amdt. 2, cancelled
Little Falls, MN—Little Falls-Morrison County, NDB Rwy 30, Amdt. 2
St. Louis, MO—Lambert-St. Louis International, NDB Rwy 12R, Amdt. 9
Newark, OH—Newark-Heath, NDB Rwy 8, Original
Clinton, OK—Clinton-Sherman, NDB Rwy 17R, Amdt. 4

4. By amending § 97.29 ILS-MLS SIAPs identified as follows:

** * * Effective March 20, 1980*

Lexington, KY—Blue Grass, ILS Rwy 4, Amdt. 6
Lexington, KY—Blue Grass, ILS Rwy 22, Amdt. 1
Fort Worth, TX—Meacham Field, ILS Rwy 16L, Amdt. 4

** * * Effective February 21, 1980*

Denver, CO—Stapleton Intl, ILS BC Rwy 8R, Amdt. 7, cancelled
Denver, CO—Stapleton Intl, ILS/DME Rwy 8R, Original
Burlington, IA—Burlington Muni., ILS Rwy 36, Amdt. 4
St. Louis, MO—Lambert-St. Louis International, ILS Rwy 12R, Amdt. 14
Clinton, OK—Clinton-Sherman, ILS Rwy 17R, Original
Clinton, OK—Clinton-Sherman, ILS Rwy 35L, Amdt. 3, cancelled
Westhampton Beach, NY—Suffolk County, ILS Rwy 24, Amdt. 4

5. By amending § 97.31 RADAR SIAPs identified as follows:

** * * Effective March 20, 1980*

Lexington, KY—Blue Grass, RADAR-1, Amdt. 4

** * * Effective February 21, 1980*

Deland, FL—Deland Muni/Sidney H. Taylor Field, RADAR-1, Amdt. 1

6. By amending § 97.33 RNAV SIAPs identified as follows:

** * * Effective February 21, 1980*

Valparaiso, IN—Porter County Muni., RNAV Rwy 9, Original
Burlington, IA—Burlington Muni., RNAV Rwy 18, Amdt. 3
Ashland, KY—Ashland-Boyd County, RNAV Rwy 28, Original
Matawan, NJ—Marlboro, RNAV Rwy 9, Original

[Secs. 307, 313(a), 601, and 1110, Federal Aviation Act of 1958 (49 U.S.C. §§ 1348, 1354(a), 1421, and 1510); Sec. 6(c), Department of Transportation Act (49 U.S.C. § 1655(c)); and 14 CFR 11.49(b)(3)]

Note.—The FAA has determined that this document involves a regulation which is not significant under Executive Order 12044, as implemented by DOT Regulatory Policies and Procedures (44 FR 11034; February 26, 1979). Since this regulatory action involves an established body of technical requirements for which frequent and rountine amendments are necessary to keep them operationally current and promote safe flight operations, the anticipated impact is so minimal that this action does not warrant preparation of a regulatory evaluation.

Issued in Washington, D.C. on January 4, 1980.

James M. Vines,

Chief, Aircraft Programs Divisions.

Note.—The incorporation by reference in the preceding document was approved by the Director of the Federal Register on May 12, 1969.

[FR Doc. 80-729 Filed 1-9-80; 8:45 am]

BILLING CODE 4910-13-M

CIVIL AERONAUTICS BOARD

14 CFR Part 385

[Regulation OR-162; Amdt. No. 95]

Delegations and Review of Action Under Delegation; Nonhearing Matters

AGENCY: Civil Aeronautics Board.

ACTION: Final rule.

SUMMARY: The CAB changes its delegation to the Chief of the Essential Air Services Division to permit the renewal of a Board order to continue essential air service for five 30-day periods while the Board searches for a carrier to provide replacement service. Previously such an order could be renewed by the staff only three times.

DATES: Adopted: January 4, 1980; Effective: January 10, 1980.

FOR FURTHER INFORMATION CONTACT: Patrick V. Murphy, Chief, Essential Air Services Division, Bureau of Domestic Aviation, Civil Aeronautics Board, 1825 Connecticut Avenue, N.W., Washinigton, D.C. 20428; 202-673-5408.

SUPPLEMENTARY INFORMATION: Section 33 of the Airline Deregulation Act of 1978, Pub. L. 95-504, added a new section 419 to the Federal Aviation Act of 1958. The purpose of the section is to ensure that essential air service is maintained at communities defined as eligible points under that section. Section 419 requires air carriers to notify the Board of their plans to reduce service to an eligible point below the level the Board has determined to be essential for that point.

When the Board receives notification of a planned reduction in service, it must look for a replacement carrier. If it is unable to find one within the time prescribed by the Act, section 419(a)(6) requires the Board to order the incumbent carrier to continue service for another 30 days. The Board must renew the order to continue service every 30 days until it eventually does find a replacement.

By OR-151, 44 FR 22715, April 17, 1979, the Board delegated to the Chief of the Essential Air Services Division the authority to renew the order to continue service up to three times in succession. A fourth renewal order had to be issued by the Board. Experience with this system has demonstrated that it has created an unncessary administrative burden on Board staff. This burden can be alleviated by lengthening the interval for Board reviews of staff action from 4 months to 6 months. Our ability to monitor the air service situation at a community will not be diminished by allowing the Chief of the Essential Air Services Division to renew the Board order to continue service up to five times in succession. The delegation of authority is being amended accordingly. Under this system, every sixth renewal order will have to be issued by the Board, after which five more may be issued under delegated authority.

Since this amendment is administrative in nature, affecting a rule of agency organization and procedure, the Board finds that notice and public procedure are unnecessary, and that there is good cause for an immediate effective date.

Accordingly, the Board revises § 385.14 of 14 CFR Part 385, *Delegations and Review of Action Under Delegation; Nonhearing Matters*, to read:

§ 385.14 Delegation to the Chief, Essential Air Services Division, Bureau of Domestic Aviation.

The Board delegates to the Chief of the Essential Air Services Division, Bureau of Domestic Aviation, the authority to renew, up to five times in succession, a Board order under section 419(a)(6) of the Act to an air carrier to continue providing essential air transportation while the Board attempts to find a replacement carrier.

(Section 204 of the Federal Aviation Act of 1958, as amended, 72 Stat. 743, 49 U.S.C. 1324; Reorganization Plan No. 3 of 1961, 75 Stat. 837, 49 U.S.C. 1324 (note).)

By the Civil Aeronautics Board.

Phyllis T. Kaylor,

Secretary.

[FR Doc. 80-840 Filed 1-9-80; 8:45 am]

BILLING CODE 6320-01-M

14 CFR Part 399

[PSDR-55B; Policy Statements, Docket 34683; Dated: January 7, 1980]

Joint Fares Involving Intrastate Pairs of Points; Request for Comments

AGENCY: Civil Aeronautics Board.

ACTION: Supplementary notice of request for comments.

SUMMARY: The Civil Aeronautics Board adopted an interim rule in February 1979 establishing a formula to standardize intrastate and interstate fare levels. As a result of changed circumstances in the airline industry, the Board is inviting comments on whether the formula for increasing the intrastate rates should be changed.

DATES: Comments by: February 8, 1980.

Comments should be incorporated with those requested in PSDR-55. Comments and other relevant information received after these dates will be considered by the Board only to the extent practicable.

ADDRESSES: Twenty copies of Comments should be sent to Docket Section, Civil Aeronautics Board, 1825 Connecticut Avenue, N.W., Washington, D.C. 20428. Individuals may submit their views as consumers without filing multiple copies. Comments may be examined in Room 711, Universal Building, 1825 Connecticut Avenue, N.W., Washington, D.C., as soon as they are received.

FOR FURTHER INFORMATION CONTACT: Laurie Schaffer, Bureau of Domestic Aviation, (202) 673-5009, Civil Aeronautics Board, 1825 Connecticut Avenue, N.W., Washington, D.C. 20428, or Mark Kahan, Assistant Director, Fares, Rates, and Tariffs, Bureau of Domestic Aviation, (202) 673-5830, Civil Aeronautics Board, 1825 Connecticut Avenue, N.W., Washington, D.C. 20428.

SUPPLEMENTARY INFORMATION: In PS-82 (44 FR 9940, February 15, 1979), the Board amended section 399.33(a) to establish a suspension policy on standard industry fare levels for intrastate points in California, Florida, and Texas, where local fare ceilings were lower than those calculated according to the PS-80 policy. In order to standardize the interstate and intrastate fare levels without causing abrupt increases in fares, PS-82 provided for a gradual rise to interstate levels, with full equalization postponed until January 1981. Initially, the intrastate level rose 10 percent; thereafter, the levels have risen eight percent semi-annually and are scheduled to continue to rise until January 1981 at which time the PS-80 ceiling fare would become the standard industry fare level.

PS-82 is an interim rule and was accompanied by a request for comments (PSDR-55, 44 FR 9953, February 15, 1979). Comments were received from Eastern Airlines (April 5, 1979), State of California and the Public Utilities Commission of the State of California (April 17, 1979) and Pacific Southwest Airlines (May 7, 1979). The comments of both Eastern and PSA focused on the dramatic rise in fuel costs and the need to adjust SIFL accordingly. The

California comments raised a variety of legal challenges to PS–82. These were the only comments received.

In addition to these comments, the Board recently received an application from United Air Lines (November 21, 1979) for a waiver of section 399.33 to allow United to increase its intrastate California fares by varying amounts, ranging from 5 percent to 41 percent, by increasing its SIFL formula by 25 percent. To justify its application, United referred to changed circumstances in the airline industry and the California markets since the effective date of PS–82. In this period of time, the carrier reports a substantial decline in profits and rapidly rising costs, in particular, a sharp increase in the price of jet fuel. Because of these factors, United argues that it is no longer economically tolerable to maintain the lower intrastate California fares.

The impact of these changed circumstances may have had an effect on the California markets. A recent staff memorandum noted that the service losses in California have been greater than in the rest of the country in spite of California's relatively high ratio of income and population growth. For example, there are 663 originating cities listed in the Board's *Report on Airline Service, Fares, Traffic, Load Factors, and Market Shares,* August 1979, and 53 or 8.1 percent are located in California. Of these cities, 298 lost some service during the period July 1, 1978 to July 1, 1979. Twenty-eight of these cities (9.4 percent) were located in California. Furthermore, of the cities for which airlines have filed to withdraw all service, 18 percent of those in the continental United States have been in California. The staff suggests that there appears to be a reasonable connection between California's problems and the low fares in the intrastate California markets, and that the combination of existing service by certificated carriers may be in jeopardy as long as intrastate fares in California continue to produce lower revenues than other markets of comparable distances. Because of the changing circumstances in the airlines industry and the potential impact of current Board fare policies on the California markets, a re-examination of the acceleration of rates proposed in PS–82 seems desirable.

Accordingly, the Civil Aeronautics Board requests comments from all interested parties on whether the formula for increasing rates under PS–82 should be changed and, if so, how. All filed comments should include a full presentation of all evidence and arguments upon which the commenter wishes to rely in support of his position, or in rebuttal of facts relied upon by the Board. We have tentatively concluded that all relevant issues can be determined on the basis of written comments, and that oral evidentiary procedures will not be required. Comments should be submitted within 30 days after the service of this notice. The filing period has been reduced from the standard 60 days because of the necessity to address immediately the issues raised by the loss of service in the California markets.

By the Civil Aeronautics Board.

Phyllis T. Kaylor,

Secretary.

[FR Doc. 80–839 Filed 1–9–80; 8:45 am]

BILLING CODE 6320–01–M

COMMODITY FUTURES TRADING COMMISSION

17 CFR Parts 1, 145, and 147

General Regulations Under the Commodity Exchange Act, Freedom of Information Act, and Government in the Sunshine Act; Financial Reporting Requirements for Futures Commission Merchants

Republication

Note.—In FR Doc. 79–34725, appearing at page 65970 in the issue of Friday, Nov. 16, 1979, on pages 65972 thru 65974, in the codified material the symbol to indicate additions (> <) was inadvertently omitted. For the convenience of the reader the document is being republished in its entirety.

AGENCY: Commodity Futures Trading Commission.

ACTION: Final rules.

SUMMARY: The Commodity Futures Trading Commission ("Commission") is adopting amendments to its financial reporting requirements for futures commission merchants (FCMs). The amendments to §§ 1.10, 1.12, 1.16, 1.18 and 1.52 of the regulations will allow those FCMs, or applicants therefor, which are registered with the Securities and Exchange Commission ("SEC") as securities brokers or dealers to comply with the Commission's financial reporting requirements by filing copies of the SEC's FOCUS Report,[1] Part II, in lieu of the Commission's Form 1–FR. The amendments will also allow FCM/broker-dealers to use the FOCUS Report, Part II, when computing adjusted net capital for purposes of the required monthly capital computations. In addition, the Commission is amending its rules under the Freedom of Information Act ("FOIA") (5 U.S.C. 552) concerning those portions of the FOCUS Report, Part II, that generally will not be made public or released. Finally, the Commission is amending its rules under the Government in the Sunshine Act (5 U.S.C. 552b) with respect to closing Commission meetings to the public and withholding from the public certain information concerning the portions of the FOCUS Report, Part II, that generally will not be made public or released.

EFFECTIVE DATE: November 16, 1979.

FOR FURTHER INFORMATION CONTACT: Daniel A. Driscoll, Chief Accountant, Division of Trading and Markets, 2033 K Street, NW., Washington, D.C. 20581, (202) 254–8955.

SUPPLEMENTARY INFORMATION: The Commission adopted new minimum financial requirements on August 29, 1978,[2] which, among other things, amended the reporting requirements for FCMs and changed the criteria used to determine whether an FCM meets the Commission's minimum financial requirements. To implement the provisions of the revised minimum financial regulations, the Commission adopted a revised Form 1–FR, the basic financial reporting form for FCMs, on March 6, 1979.[3]

When the Commission adopted the new minimum financial requirements, it stated that the Commission staff and representatives of the SEC had initiated cooperative efforts in connection with their respective financial regulations to eliminate duplicative financial regulation of FCMs which are also registered brokers or dealers.[4] When the Commission adopted the revised Form 1–FR, it noted that the SEC had proposed for comment [5] amendments to its uniform net capital rule (17 CFR 240.15c3–1). The Commission also stated that the SEC amendments, of adopted as proposed, could provide the requisite uniformity to permit the Commission to allow those FCMs which are also registered with the SEC as securities broker-dealers to comply with the

[1] Financial and Operational Combined Uniform Single Report under the Securities Exchange Act of 1934. A copy of the FOCUS Report, Part II can be found at 3 Fed. Sec. L. Rep. (CCH) ¶33,928.

[2] The regulations were published on September 8, 1978 at 43 FR 39956.

[3] The revised Form 1–FR was published on March 12, 1979 at FR 13435. At the same time, the Commission amended its regulations under the FOIA and Government in the Sunshine Act to reflect the changes being made in Form 1–FR and to give nonpublic treatment to certain portions thereof.

[4] 43 FR 39956, at 39957–39958 (September 8, 1978). The Commission had also publicly announced this cooperation in its Federal Register releases proposing changes in the minimum financial requirements. 42 FR 27166, at 27168 (May 26, 1977) and 43 FR 15072, at 15076 (April 10, 1978).

[5] 44 FR 1754 (January 8, 1979).

Commission's financial reporting requirements by simply filing copies of the SEC's FOCUS report with self-regulatory organizations and the Commission.[6]

On June 5, 1979, the SEC adopted the amendments to its uniform net capital rule in substantially the same form as they were proposed.[7] The effect of the amendments is to conform the SEC's uniform net capital rule to the provisions of the Commission's minimum financial requirements relating to various aspects of the commodities business of an FCM (or applicant therefor) which is also a registered broker or dealer.

The few computational differences that remain between the Commission's minimum financial rules and the SEC's net capital rule impact primarily on those FCM/broker-dealers which are also cash commodity merchants, cooperatives, or manufacturers. Very few FCM/broker-dealers engage in these types of businesses. In the case of each such computational difference of which the Commission is aware, the SEC's net capital treatment is more stringent than that of the Commission. Therefore, an FCM/broker-dealer's adjusted net capital computed pursuant to the Commission's rules would always be the same as or greater than its net capital computed in accordance with the SEC Rule.[8] If an FCM wishes to use the Commission's computational criteria, it must utilize Form 1–FR. If an FCM/broker-dealer chooses to file a copy of its FOCUS Report, Part II, in lieu of Form 1–FR, it must use the SEC's computational criteria when preparing such report.

In addition to adopting the proposed amendments to its uniform net capital rule, the SEC also added on June 5, 1979 another schedule to its FOCUS Report entitled "Schedule of Segregation Requirements and Funds in Segregation."[9] This Schedule is identical to the Schedule with the same title contained in Form 1–FR. With this additional Schedule, Part II of the FOCUS Report provides, with one exception, substantively identical information to that provided on Form 1–FR.[10] For those FCM/broker-dealers which carry commodity options accounts for customers, the information set forth in the Schedule in footnote 10 must be provided along with Part II of the FOCUS Report (the required information need not necessarily be furnished in exactly the form set out in footnote 10). All FCM/broker-dealers are reminded of their continuing obligation under § 1.16(c)(5) of the Commission's regulations (17 CFR 1.16(c)(5)) to file the independent accountant's supplemental report on material inadequacies concurrently with the annual audit report.

Consistent with current practice regarding such schedules filed as part of the Form 1–FR, information regarding segregated funds submitted as part of the FOCUS Report, Part II will be treated as public information under the FOIA, and the Government in the Sunshine Act and Commission regulations promulgated thereunder.

At present, the only information included on the Form 1–FR which is not included on the FOCUS Report, Part II is in the schedule set forth in footnote 10.[11]

To take into account the possibility that the Commission might in the future require additional information in Form 1–FR and the SEC did not amend its financial reporting system accordingly, the amended regulations will be worded so that an FCM/broker-dealer will be permitted to file a copy of the FOCUS Report, Part II, in lieu of Form 1–FR, so long as such filing provides the Commission with the same information that would be furnished if a Form 1–FR were to be filed.

Amendments to Commission Rule 145.5

The Freedom of Information Act ("FOIA"), 5 U.S.C. 552, basically requires that upon request, the Commission must make its records available to the public unless the records fall within the exemptions set forth in the FOIA. Section 552(b)(4) of the FOIA provides that "trade secrets and commercial or financial information obtained from a person and privileged or confidential" are exempt from mandatory public disclosure. Section 145.5(d)(1)(i) of the Commission's regulations under the FOIA, 17 CFR 145.5(d)(1)(i), provides that certain of the information submitted to the Commission on and with Form 1–FR is to be treated as nonpublic. The Commission is now amending Section 145.5(d)(1)(i) to take account of the change in the regulations which will permit those FCMs, or applicants therefor, which are registered broker-dealers to file copies of the FOCUS Report, Part II.[12]

Under 145.5(d)(1)(i)(C) of the amended rule, the following portions, and related footnote disclosures thereof, of the FOCUS Report, Part II which an FCM/broker-dealer may file in lieu of Form 1–FR pursuant to § 1.10(h) of the Commission's regulations will be treated as nonpublic provided that the procedure set forth in 1.10(g)[13] of the Commission's regulations is followed: the Statement of Income (Loss), the Statement of Changes in Financial Position, the Computation for Determination of Reserve Requirements for Broker-Dealers under [SEC] Rule 15c3–3, the Statement of Ownership Equity and Subordinated Liabilities maturing or proposed to be withdrawn within the next six months and accruals, which have not been deducted in the computation of net capital, and the Recap thereof, the Statement of Changes in Ownership Equity, the Statement of

[6] 44 FR 13435, at 13436.

[7] The amended rule was published on June 15, 1979 at 44 FR 34884 and became effective on July 23, 1979.

[8] FCM/broker-dealers should, however, be aware that the SEC's rule sets lower minimum capital requirements for certain classes of broker-dealers than the Commission has set for FCM's. Consequently an FCM/broker-dealer could meet the SEC requirements but fail to meet the Commission's minimum capital requirements.

[9] 44 FR 34889 (June 15, 1979). This addition to the FOCUS reporting system was proposed at 44 FR 1759 (January 8, 1979).

[10] The one exception is the "Schedule of Segregation Requirements and Funds in Segregation" which is as follows:

FCM: / Firm Employer Id. No. /

FORM 1–FR.—*Schedule of Segregation Requirements and Funds in Segregation as of* _____/_____/_____

Commodity Options Accounts

1. Amount required to be segregated in accordance with Commission regulation 32.6		$_____
2. Funds in Segregation:		
A. Cash	$_____	
B. Securities (at market)	_____	
C. Total of A and B		_____
3. Excess funds in segregation (2 minus 1)		$_____

[11] There are three other schedules which are part of the FOCUS Report but which have no equivalent in the Form 1–FR. These schedules are discussed below.

[12] In certain instances, some of the information on the nonpublic portions of the FOCUS Report, Part II, may also be subject to general protection from public disclosure under Section 8(a) of the Commodity Exchange Act if it "would separately disclose the business transactions or market positions of any person and trade secrets or names of customers." As such, that information would be entitled to be withheld from disclosure under the FOIA pursuant to the exemption for matters specifically exempted from disclosure by a statute which requires withholding from the public. *See* Section 552(b)(3) of the FOIA, 5 U.S.C. 552(b)(3), and Section 145.5(c) of the Commission's regulations thereunder, 17 CFR 145.5(c).

[13] Section 1.10(g) requires that the other portions of the Form 1–FR be bound separately in order that nonpublic treatment be accorded to the portions listed in Section 145.5(d)(1)(i)(B). Section 1.10(g) is being amended to add a similar requirement regarding nonpublic treatment of the portions of the FOCUS Report, Part II, listed in the text.

Changes in Liabilities Subordinated to the Claims of General Creditors, the Statement of Financial and Operational Data, and the accountant's report on material inadequacies filed under § 1.16(c)(5) of the Commission's regulations.

The Commission will, therefore, generally make available under the FOIA the Statement of Financial Condition, the Computation of Net Capital, and the Schedule of Segregation Requirements and Funds in Segregation of the FOCUS Report, Part II. By doing so, the Commission will preserve parity of treatment for all FCMs, since the Commission generally makes available comparable portions of the Form 1–FR. The SEC generally treats as nonpublic all of the FOCUS Report, Part II, except for the Statement of Financial Condition, and accompanying footnotes, from the certified report filed as of the fiscal year-end. One of those footnotes reports the firm's net capital position; thus, the release of the Computation of Net Capital will merely serve to give the details of that reported position. The Schedule of Segregation Requirements and Funds in Segregation on the FOCUS Report, Part II is identical to the schedule with the same name on the Form 1–FR. The Commission generally has made that schedule available under the FOIA, and it will do the same regarding that schedule on the FOCUS Report, Part II. The above considerations will also be reflected in the Commission's treatment of the FOCUS Report, Part II under the Government in the Sunshine Act.

The schedules Computation for Determination of Reserve Requirements for Broker-Dealers under [SEC] Rule 15c3–3 and Statement of Financial and Operational Data reflect information about the business of FCM/broker-dealers which relates principally to their securities-related activities. Therefore, there are no corresponding schedules on the Form 1–FR, since such information is not applicable to FCMs which are not broker-dealers. The schedule Statement of Ownership Equity and Subordinated Liabilities maturing or proposed to be withdrawn within the next six months and accruals, which have not been deducted in the computation of net capital, and the Recap thereof, compiles in tabular form information which is currently contained in the Commission's records and generally accorded nonpublic treatment, although there is no similar schedule filed with Form 1–FR.

The instructions to Form 1–FR inform the applicant or registrant of his rights and the Commission's responsibilities under the FOIA and the Commission's regulations promulgated thereunder,[14] and every FCM or applicant therefor which is a registered broker-dealer should be familiar with those instructions. The Commission's policy is that exempt records generally will be withheld from disclosure under the FOIA; however, irrespective of this policy and of whether a person petitions the Commission for confidential treatment, the Commission has an obligation to determine whether its records are publicly available. A person who has submitted information and has accompanied the submission with a petition for confidential treatment has the right to notice and appeal of a decision by the Commission staff and the Commission itself as to the disclosure or withholding of materials pursuant to the FOIA. See 17 CFR 145.9.[15] Those considering filing a petition for confidential treatment are reminded of the requirement in Rule 145.9(i) that a petitioner intend in good faith to aid the Commission in any proceeding that might be brought to compel the Commission to disclose the information.

Amendments to Commission Rule 147.3

The Government in the Sunshine Act, 5 U.S.C. 552b, basically requires that Commission meetings be open to public observation and certain information pertaining to meetings be disclosed to the public unless a meeting is likely to focus on a specifically exempted matter. One such exemption is provided in Section 552b(c)(4) of that Act which provides that Commission meetings or portions of meetings which are likely to "disclose trade secrets and commercial or financial information obtained from a person and privileged or confidential" may be closed and that certain information with respect thereto may be withheld from the public.

Section 147.3(b)(4)(i)(A) of the Commission's regulations under that Act, 17 CFR 147.3(b)(4)(i)(A), permits the closing of Commission meetings or portions of meetings and the withholding from the public of certain information with respect thereto when such meetings or portions of meetings are likely to involve discussions of certain nonpublic information submitted to the Commission with Form 1–FR's. The Commission is now amending Rule 147.3(b)(4)(i)(A) to take account of the change in the regulations which will permit those FCMs, or applicants therefor, which are registered broker-dealers to file copies of the FOCUS Report, Part II.[16]

Under § 147.3(b)(4)(i)(A)(3) of the amended rule, the following portions, and related footnote disclosures thereof, of the FOCUS Report, Part II which an FCM/broker-dealer may file in lieu of Form 1–FR pursuant to 1.10(h) of the Commission's regulations will constitute a basis for closing Commission meetings or portions of meetings and withholding from the public information pertaining thereto provided that the procedure set forth in § 1.10(g) of the Commission's regulations [17] is followed: the Statement of Income (Loss), the Statement of Changes in Financial Position, the Computation for Determination of Reserve Requirements for Broker-Dealers under [SEC] Rule 15c3–3, the Statement of Ownership Equity and Subordinated Liabilities maturing or proposed to be withdrawn within the next six months and accruals which have not been deducted in the computation of net capital, and the Recap thereof, the Statement of Changes in Ownership Equity, the Statement of Changes in Liabilities Subordinated to the Claims of General Creditors, the Statement of Financial and Operational Data, and the accountant's report on material inadequacies filed under § 1.16(c)(5) of the Commission's regulations.

Effective Date

The foregoing rule amendments shall be effective immediately. The Commission finds that the amendments are merely interpretive of existing practice and procedure of which the public has previously been informed and that these rule changes will not have a

[14] 17 CFR Part 145.

[15] The Commission has recently proposed an amendment to 17 CFR 145.9 which would require that a copy of a petition for confidential treatment be filed with the division or office of the Commission to which the information subject to the petition is submitted, as well as the Office of Public Information. 44 FR 51232 (August 31, 1979).

[16] In certain instances, some of the information on the nonpublic portions of the FOCUS Report, Part II, may also be subject to general protection from public disclosure under Section 8(a) of the Commodity Exchange Act if it "would separately disclose the business transactions or market positions of any person and trade secrets or names of customers." As such, that information would constitute a basis for closing Commission meetings or portions of meetings and withholding from the public certain information with respect thereto pursuant to the exemption for matters specifically exempted from disclosure by a statute which requires withholding from the public. See Section 552b(c)(3) of the Government in the Sunshine Act, 5 U.S.C. 552b(c)(3), and Section 147.3(b)(3) of the Commission's regulations thereunder, 17 CFR 147.3(b)(3).

[17] A conforming amendment to section 1.10(g) is being made to make clear that nonpublic treatment will generally be accorded to appropriate portions of the Form 1–FR and the FOCUS Report, Part II under the Government in the Sunshine Act, as well as FOIA, provided the separate binding procedure is followed.

substantial impact on the public. Therefore, any further public procedures and publication prior to the effective date of the rules, in accordance with the Administrative Procedure Act, as codified, 5 U.S.C. 553, are not required. The amendments to Sections 1.10, 1.12, 1.16, 1.18 and 1.52 of the Commission's regulations are procedural in nature and do not affect any substantive rights since they merely provide those FCMs, or applicants therefor, which are registered as brokers or dealers with the option of filing copies of the FOCUS Report, Part II, in lieu of Form 1–FR.[18] The conforming amendment in § 1.10(g) to reference the Government in the Sunshine Act is also a matter of procedure.

The amendments to Parts 145 and 147 are also being made effective immediately to provide that nonpublic treatment now accorded to certain information required to be contained on the form 1–FR is accorded to the same information if provided on the FOCUS Report, Part II. This merely carries over existing procedures.

In consideration of the foregoing and pursuant to the authority in 5 U.S.C. 552, 5 U.S.C. 552b, and Sections 2(a)(11), 4b, 4f, 4g, 5a, 8a, and 17 of the Commodity Exchange Act, 7 U.S.C. 4a(j), 6b, 6f, 6g, 7a, 12a, and 21, as amended, 92 Stat. 865 *et seq.*, the Commission hereby amends Parts 1, 145 and 147 of Chapter I of Title 17 of the Code of Federal Regulations as follows (> < indicate additions, [ ] indicate deletions):

PART I—GENERAL REGULATIONS UNDER THE COMMODITY EXCHANGE ACT

1. Section 1.10 is amended by adding the following sentence in paragraph (g) thereof and a new paragraph (h) thereto:

§ 1.10 Applications for registration and financial reports of Futures Commission Merchants.

* * * * *

(g) *Nonpublic treatment of reports.* All of the forms 1–FR filed pursuant to this section will be public: *Provided, however,* That if the statement of financial condition, the computation of the minimum capital requirements pursuant to § 1.17, and the schedule of segregation requirements and funds on deposit in segregation are bound separately from the other financial statements (including the statement of income (loss)), footnote disclosures and schedules of form 1–FR, trade secrets and certain other commercial or financial information on such other statements and schedules will be treated as nonpublic for purposes of the Freedom of Information Act >and the Government in the Sunshine Act< and part>s< 145 >and 147< of this chapter. >All of the copies of the FOCUS Report, Part II, filed pursuant to paragraph (h) of this section will be public: *Provided, however,* That if the statement of financial condition, the computation of net capital, and the schedule of segregation requirements and funds on deposit in segregation are bound separately from the other financial statements (including the statement of income (loss)), footnote disclosures and schedules of the FOCUS Report, Part II, trade secrets and certain other commercial or financial information on such other statements and schedules will be treated as nonpublic for purposes of the Freedom of Information Act and the Government in the Sunshine Act and parts 145 and 147 of this chapter.< All information on such other statements, footnote disclosures and schedules will, however, be available for official use by any official or employee of the United States or any State, by any self-regulatory organization of which the person filing such report is a member, and by any other person to whom the Commission believes disclosure of such information is in the public interest. Nothing in this paragaph (g) will limit the authority of any self-regulatory organization to request or receive any information relative to its members' financial condition. The independent accountant's opinion filed pursuant to this § 1.10 will be deemed public information.

>(h) *FCM/broker-dealer filing option.* Any applicant or registrant which is registered with the Securities and Exchange Commission as a securities broker or dealer may comply with the requirements of this section by filing (in accordance with subparagraph (a)(2) and paragraphs (b) and (c) of this section) a copy of its Financial and Operational Combined Uniform Single Report under the Securities Exchange Act of 1934, Part II, in lieu of Form 1–FR; *Provided, however,* That all information which is required to be furnished on and submitted with Form 1–FR is provided with such Report.<

2. In § 1.12, paragraph (b) is amended to read as follows:

§ 1.12 Maintenance of minimum financial requirements by Futures Commission Merchants.

* * * * *

(b) * * * Such applicant or registrant must also file a Form 1–FR >(or, if such applicant or registrant is registered with the Securities and Exchange Commission as a securities broker or dealer, it may file (in accordance with § 1.10(h)) a copy of its Financial and Operational Combined Uniform Single Report under the Securities Exchange Act of 1934, Part II, in lieu of Form 1–FR)< or such other financial statement designated by the Commission and/or the designated self-regulatory organization, if any, as of the close of business for the month during which such event takes place and as of the close of business for each month thereafter until three (3) successive months have elapsed during which the applicant's or registrant's adjusted net capital is at all times equal to or in excess of the minimums set forth in this paragraph (b) which are applicable to such applicant or registrant. Each financial statement required by this paragraph (b) must be filed within 30 calendar days after the end of the month for which such report is being made.

* * * * *

3. In § 1.16, paragraph (c) is amended to read as follows:

§ 1.16 Qualifications and reports of accountants.

* * * * *

(c) * * *

(5) * * * An applicant must file concurrently with the audit report a supplemental report by the accountant describing any material inadequacies found to exist as of the date of the form 1–FR being filed[.] >; *Provided, however,* That if such applicant is registered with the Securities and Exchange Commission as a securities broker or dealer, and it files (in accordance with § 1.10(h)) a copy of its Financial and Operational Combined Uniform Single Report under the Securities Exchange Act of 1934, Part II, in lieu of Form 1–FR, the accountant's supplemental report must be made as of the date of such report.< The supplemental report must indicate any corrective action taken or proposed by the applicant or registrant in regard thereto. If the audit did not disclose any

[18] In anticipation of the changes made by the SEC, the Commission's Division of Trading and Markets issued a "no-action" letter on December 22, 1978 to permit FCM/broker-dealers to file copies of the FOCUS Report, Part II, in lieu of Form 1–FR. That no-action position was subsequently extended in letters dated March 26, 1979, May 3, 1979, and August 6, 1979. It should, therefore, be unnecessary for any firm to change its present practices solely as a result of the instant rule changes. Those first three "no-action" letters also extended to FCM/broker-dealers who failed to meet the Commission's minimum financial requirements if they could affirmatively demonstrate that they met the SEC's net capital rule. That portion of the "no-action" position expired on July 15, 1979. All FCM/broker-dealers were required to meet the Commission's minimum financial requirements beginning July 16, 1979.

material inadequacies, the supplemental report must so state.

* * * * *

4. In § 1.18, paragraphs (a) and (b) are amended to read as follows:

§ 1.18 Records for and relating to financial reporting and monthly computation.

(a) No person shall be registered as a futures commission merchant under the Act unless, commencing on the date his application for such registration is filed, he prepares and keeps current ledgers or other similar records which show or summarize, with appropriate references to supporting documents, each transaction affecting his asset, liability, income, expense and capital accounts, and in which (except as otherwise permitted in writing by the Commission) all his asset, liability and capital accounts are classified into either the account classification subdivisions specified on Form 1–FR >or, if such person is registered with the Securities and Exchange Commission as a securities broker or dealer and he files (in accordance with § 1.10(h)) a copy of his Financial and Operational Combined Uniform Single Report under the Securities Exchange Act of 1934, Part II, in lieu of Form 1–FR, the account classification subdivisions specified on such Report,< or categories that are in accord with generally accepted accounting principles. Each person so registered shall prepare and keep current such records.

(b) Each applicant or registrant must make and keep as a record in accordance with § 1.31, formal computations of its adjusted net capital and of its minimum financial requirements pursuant to § 1.17 or the requirements of the designated self-regulatory organization to which it is subject as of the close of business each month. >An applicant or registrant which is also registered as a securities broker or dealer with the Securities and Exchange Commission may meet the computation requirements of this paragraph by completing the Statement of Financial Condition and Computation of Net Capital portions of the Financial and Operational Combined Uniform Single Report under the Securities Exchange Act of 1934, Part II.< * * *

* * * * *

5. In § 1.52, paragraph (a) is amended to read as follows:

§ 1.52 Self-regulatory organization adoption and surveillance of minimum financial requirements.

(a) * * * Such requirements must be the same as, or more stringent than, those contained in §§ 1.10 and 1.17, and the definition of adjusted net capital must be the same as that prescribed in § 1.17(c): *Provided, however,* A designated self-regulatory organization may determine the number of form 1–FR's it receives from its member registrants so long as it requires at least semiannual form 1–FR's, one of which must be certified in accordance with § 1.16 for each such registrant[.] >; *Provided, further,* A designated self-regulatory organization may permit its member registrants which are registered with the Securities and Exchange Commission as securities brokers or dealers to file (in accordance with Section 1.10(h)) a copy of their Financial and Operational Combined Uniform Single Report under the Securities Exchange Act of 1934, Part II, in lieu of Form 1–FR.<

* * * * *

PART 145—COMMISSION RECORDS AND INFORMATION

6. In § 145.5, paragraph (d)(1)(i) is amended to read as follows:

§ 145.5 Nonpublic matters.

* * * * *

(d) * * *

(1) * * *

(i) * * *

>(C) The following portions, and footnote disclosures thereof, of the Financial and Operational Combined Uniform Single Report under the Securities Exchange Act of 1934, Part II, filed pursuant to 17 CFR 1.10(h): *Provided,* The procedure set forth in 17 CFR 1.10(g) is followed: The Statement of Income (Loss), the Statement of Changes in Financial Position, the Computation for Determination of Reserve Requirements for Broker-Dealers under [SEC] Rule 15c3–3, the Statement of Ownership Equity and Subordinated Liabilities maturing or proposed to be withdrawn within the next six months and accruals, which have not been deducted in the computation of net capital, and the Recap thereof, the Statement of Changes in Ownership Equity, the Statement of Changes in Liabilities Subordinated to the Claims of General Creditors, the Statement of Financial and Operational Data, and the accountant's report on material inadequacies filed under 17 CFR 1.16(c)(5);<

* * * * *

PART 147—OPEN COMMISSION MEETINGS

7. In § 147.3, paragraph (b)(4)(i)(A) is amended to read as follows:

§ 147.3 General requirements of open meetings; grounds upon which meetings may be closed.

* * * * *

(b) * * *

(4) * * *

(i) * * *

(A) * * *

>(3) The following portions, and footnote disclosures thereof, of the Financial and Operational Combined Uniform Single Report under the Securities and Exchange Act of 1934, Part II, filed pursuant to 17 CFR 1.10(a): *Provided,* The procedure set forth in 17 CFR 1.10(g) is followed: The Statement of Income (Loss), the Statement of Changes in Financial Position, the Computation for Determination of Reserve Requirements for Broker-Dealers under [SEC] Rule 15c3–3, the Statement of Ownership Equity and Subordinated Liabilities maturing or proposed to be withdrawn within the next six months and accruals, which have not been deducted in the computation of net capital, and the Recap thereof, the Statement of Changes in Ownership Equity, the Statement of Changes in Liabilities Subordinated to the Claims of General Creditors, the Statement of Financial and Operational Data, and the accountant's report on material inadequacies filed under 17 CFR 1.16(c)(5);<

* * * * *

Issued in Washington, D.C. on November 6, 1979 by the Commission.

Jane K. Stuckey,

Secretary of the Commission.

BILLING CODE 1505-01-M

DEPARTMENT OF ENERGY

Federal Energy Regulatory Commission

18 CFR Part 290

[Docket No. RM79-6; Order No. 48-A]

Collection of Cost of Service Information Under Section 133 of the Public Utility Regulatory Policies Act of 1978; Order on Rehearing and Reconsideration of Order No. 48

Issued January 4, 1980.

AGENCY: Federal Energy Regulatory Commission.

ACTION: Order denying in part and granting in part petition for reconsideration.

SUMMARY: The Commission is modifying §§ 290.103, 290.404 and 290.601 of its regulations implementing section 133 of the Public Utility Regulatory Policies Act of 1978. These regulations govern

procedures for the collection and reporting of information associated with the cost of providing electric service. This action is being taken in response to five petitions for reconsideration received by the Commission.

EFFECTIVE DATE: February 4, 1980.

FOR FURTHER INFORMATION CONTACT: Daniel G. Lewis, Federal Energy Regulatory Commission, Office of Electric Power Regulation, 825 North Capitol St., N.E., Washington, D.C. 20426, (202) 376-9227.

Procedures governing the collection and reporting of information associated with the cost of providing electric service.

On September 28, 1979, the Federal Energy Regulatory Commission (Commission) issued Order No. 48, containing final regulations implementing section 133 of the Public Utility Regulatory Policies Act of 1978 (PURPA), (44 FR 58687, October 11, 1979). Five petitions for reconsideration and/or rehearing were received from Consumers Power Company, Public Service Company of Colorado, Arkansas Power and Light Company, Southern Company Services, Inc., and Commonwealth Edison Company. Four other parties submitted supplementary comments: Detroit Edison Company, Appalachian Power Company, *et al.*,[1] Missouri Power and Light Company, and Virginia Electric and Power Company.

Section 290.104 *Costs of compliance.* Both Consumers Power and Detroit Edison argued that costs incurred in complying with Part 290 should be included in wholesale cost-of-service. The petitions raise no new arguments, and the Commission will retain § 290.104 for the reasons stated in Order 48. These petitions have been denied by operation of law.

Section 290.404 *Customer groups to be reported.* Detroit Edison commented that clarification is needed concerning the rate groups and end-use categories to be reported and suggested improvements to the rule. Commonwealth Edison requested that the end use classes involving commercial office buildings be either deleted or better defined.

We decline to delete the end-use categories for commercial office buildings. In determining the end-use categories for which best estimates should be reported, the Commission attempted first to identify which customer groups within the general commercial and industrial class represent different consumption patterns within that class. Several groups were considered, including shopping centers, commercial office buildings, and other commercial uses. As a first step in carrying out the statutory requirements of section 133, the Commission selected commercial office buildings for reporting because the load for such customers is presumed to have a distinct effect on a utility's load pattern and tends to be coincident with many utilities' daily peaks. We acknowledge that many utilities will find it necessary to make a new analysis of commercial customers, possibly including surveys, to develop the information needed to comply with the regulations.

We regard the request for further definition of these end-use categories and the other comments as requests for interpretation of the regulations and agree that certain clarifications and interpretations are needed. We believe that the request for further definition of the term "commercial office building" is more appropriately handled through interpretations rather than a modification of the regulations because it is unlikely that a single definition can be constructed and applied to all utilities. We prefer to work with utilities on an individual or regional basis in order to define this category on a system-specific or regional basis. It is our intention to provide a procedure for interpreting Part 290 in response to specific requests. The Commission intends to provide additional definition for the commercial office buildings category within the context of this procedure.

Missouri Power and Light commented that it has a program of load research ordered by the Missouri Public Service Commission prior to the enactment of PURPA, that this program will not provide compliance with Part 290, and that it cannot use its present metering equipment to comply with Part 290 by the time of the 1982 filing. It suggested alternate wording to allow use of its best estimates in 1982 as well as in 1980. Appalachian Power Company, *et al.* Suggested other changes in § 290.404 based on overall difficulty in obtaining metered data for the 1982 filing.

We believe these utilities should deal with these situations by using the exemption or extension provisions in the regulations or, to the extent that there is uncertainty as to our requirements, by requesting interpretation of those regulations.

Section 290.404(g) *Reporting requirements.* Appalachian Power Company, *et al.* commented that the provisions of subparagraph (5) of § 290.404(g) are "ill-founded" and should be stricken. It suggests, after argument, that "the rules should simply require a description of how the estimate was derived, together with any available information on the accuracy of any borrowed or interpolated data which may have been used in preparing the estimate."

We do not agree that the provisions are "ill-founded." Having limited its reporting requirements in certain cases to "best estimates," the Commission feels it must define, at least qualitatively, the utility's responsibility to make such estimates as accurate as is reasonable. However, upon reconsideration, we find that the wording of § 290.404(g)(5) may be unduly severe in its explicit requirement for successive improvement in the estimates. We have revised the wording of subparagraph (5) so that utilities will be required to demonstrate an effort to improve the level of accuracy relative to previous estimates, and to include in their filings a description of the method used for developing those best estimates reported.

Arkansas Power and Light, Southern Company Services, and Appalachian Power Company, *et al.* argued that the provisions of subparagraph (6) of § 290.404(g) (the estoppel clause) are unnecessarily punitive, tend to dictate procedural requirements for State regulatory agency proceedings, and are unlawful. A late filing by Virginia Electric and Power Company supported Southern Company Services' petition.

We agree with the petitioners' argument that such a clause would constitute a Federal determination of State regulatory agencies' permissible evidence rules. It would also prohibit introducing improvements in the data that might have been made subsequent to a filing with the Commission and prior to the rate case. We will, therefore, eliminate the estoppel clause in § 290.404(g)(6). Instead, the regulations will require utilities to provide best estimates of load data of sufficient quality and reliability on which to base rates. A utility unable to meet this standard will be required to explain why the estimates do not meet the standard and to indicate what steps it intends to take to achieve this standard for the next reporting period. Since there is no quarantee that a utility, by its second best estimate filing, will be reporting best estimates of a quality sufficient to permit their being used as a

[1] Appalachian Power Company, Boston Edison Company, Commonwealth Edison Company, Consolidated Edison Company of New York, Inc., Florida Power and Light Company, Indiana and Michigan Electric Company, Kentucky Power Company, Kingsport Power Company, Michigan Power Company, Ohio Power Company, Union Electric Company, and Wheeling Electric Company.

basis for rates, the new approach in paragraph (g)(6) requires the utility give notice in the prior filing of what it intends to do to correct this deficiency so that potential users of the information can determine whether such corrective measures are sufficient to achieve the standards in the next filing.

Section 290.601 *Exemptions.* Appalachian Power Company, *et al.* suggested that the provisions of paragraph (d)(1)(iii) of § 290.601, which permits newspaper publication of a summary of an exemption application in lieu of publication of the entire application, should be extended to paragraph (d)(1)(ii) which currently requires publication of the entire application in any official State publication. An additional comment suggested that paragraph (d)(2) be modified to require that comments on applications for exemption be served on the utility applicant.

These are useful comments. We have revised the wording of the referenced sections to include the changes suggested. The Commission has made two other modifications on its own motion. Paragraph (a)(5) has been added to § 290.601 requiring that each application for exemption include a notice suitable for publication in the Federal Register, which will properly identify the utility, the nature of the exemption sought, and a summary of the utility's basis for the application. Paragraph (d)(2) of § 290.601 has also been amended to define the period for filing comments on such application by reference to the single date most readily accessible to all interested persons and the Commission, *i.e.* the date the notice is published in the Federal Register.

Section 290.603 *Petitions for withdrawals of exemptions and extensions.* Public Service Company of Colorado stated its concern "that the approval of a party's application for a withdrawal of an extension for a small rate class might put undue pressure on (the utility) to conduct load research that might be of questionable value for the purposes of rate design, or for that matter, for the purposes of the party's intervention." The comment also alleged that certain timing problems may arise if exemptions or extensions are withdrawn. The Commission advises that in considering petitions under this section it will certainly take account of the impact of a withdrawal on the utility as well as the benefits that may or may not result from a withdrawal. Further, the utility will have an opportunity to comment on each petition affecting it. Therefore, we see no reason to change the section.

The Commission is making one other minor modification to Part 290 on its own motion.

Section 290.103(c) *Alternative reporting period.* The Commission is making a technical change in paragraph (c) of § 290.103 to insure that a utility will be able to use the previous fiscal year as an alternative reporting period.

The Commission Orders: (A) To the extent not granted above, the petitions for reconsideration of Order No. 48 are denied.

(B) Sections 290.103, 290.404 and 290.601 of the Commission's final regulations are amended as set forth above, effective February 4, 1980.

(Public Utility Regulatory Policies Act of 1978, 16 U.S.C. 2001–2645; Energy Supply and Environmental Coordination Act, 15 U.S.C. 791–798; Federal Power Act, as amended, 16 U.S.C. 792–828C; Department of Energy Organization Act, 42 U.S.C. 7101–7352, E.O. 12009, 42 FR 46267.)

In consideration of the foregoing, Part 290 of Chapter I, Title 18, Code of Federal Regulations is amended as set forth below, effective February 4, 1980.

By the Commission.

Kenneth F. Plumb,

Secretary.

§ 290.103 [Amended]

1. Section 290.103 is amended in paragraph (c)(1) by deleting the phrase "January 1 of the filing year" and substituting in lieu thereof the phrase "December 31 of the reporting period".

2. Section 290.404 is amended in paragraphs (g)(5) and (g)(6) to read as follows:

§ 290.404 Customer groups to be reported.

* * * * *

(g) * * *

(5) The best estimate reporting for each reporting period shall demonstrate an effort to improve the accuracy of the previous filing except that such accuracy need not exceed the accuracy standard established for sample metering in § 290.403(b). The utility shall estimate and report in the November, 1980 filing and all subsequent filings the accuracy level achieved in reporting best estimates and a description of the methods used to produce those estimates.

(6) The utility's best estimate shall be of sufficient quality and reliability upon which to base rates. The utility shall either state in its filing that such best estimates conform to this standard or, if they do not, explain why they fail to conform and what steps the utility intends to take to achieve this standard by the next filing required under this part.

* * * * *

3. Section 290.601 is amended by adding a new paragraph (a)(5) and by amending paragraphs (d)(1) (i), (ii), and (d)(2) to read as follows:

§ 290.601 Exemptions.

* * * * *

(a) * * *

(5) A proposed notice of the exemption application, to be published by the Commission in the Federal Register, complying with the following form:

UNITED STATES OF AMERICA FEDERAL ENERGY REGULATORY COMMISSION

(Name of Utility)

Docket No. ——

Notice of Application for Exemption

Take notice that (name of utility), on (date), filed an application for exemption from certain requirements of Part 290 of the Commission's regulations concerning collection and reporting of cost of service information under section 133 of the Public Utility Regulatory Policies Act, Order 48, (44 FR 58687, October 11, 1979). Exemption is sought from the requirement to file, on or before (specific filing date), information on the costs of providing electric service as specified in (list of sections specifying elements of data for which exemption is sought.)

In its application for exemption, (name of utility) states that it should not be required to file the specified data for the following reason(s): (statement of reasons for seeking exemption).

Copies of the application for exemption are on file with the Commission and are available for public inspection. The Commission's regulations require that said utility also apply to any State regulatory authority having jurisdiction over it to have the application published in any official State publication in which electric rate change applications are usually noticed, and that the utility publish a summary of the application in newspapers of general circulation in the affected jurisdiction.

Any person desiring to present written views, arguments, or other comments on the application for exemption must file such information with the Federal Energy Regulatory Commission, 825 North Capitol Street, N.E., Washington, D.C. 20426, on or before 45 days following the date this notice is published in the Federal Register. Within that 45-day period such person must also serve a copy of such comments on (name and address of applicant utility.)

* * * * *

(d) * * *

(1) * * *

(i) The notice submitted by the utility under paragraph (a)(5) of this section shall be published in the Federal Register.

(ii) The utility shall apply to each State regulatory authority by which it is

regulated to have a summary of the application published in any official State publication in which rate change applications are usually noticed.

* * * * *

(2) A period of 45 days shall be permitted for receipt of written information, views, arguments, or other comments on the application, which period shall commence on the date the proposed notice of application is published in the **Federal Register**. Persons submitting such comments shall serve a copy on the applicant utility during such 45 day period.

* * * * *

[FR Doc. 80-682 Filed 1-9-80; 8:45 am]

BILLING CODE 6450-01-M

DEPARTMENT OF THE INTERIOR

Bureau of Indian Affairs

25 CFR Part 261

Housing Improvement Program; Program Category Cost Limitations

January 3, 1980.

AGENCY: Bureau of Indian Affairs, Interior.

ACTION: Rule.

SUMMARY: This rulemaking is to amend Part 261 of Subchapter X, Chapter I of Title 25 of the Code of Federal Regulations. The purpose of the amendment of this part is to increase certain program category cost limits. Specifically, § 261.4(b)(3) and § 261.4(d)(3) cost limitations will be increased. This change was made to meet the increasing prices in labor and materials.

DATES: These regulations will become effective January 10, 1980.

FOR FURTHER INFORMATION CONTACT: Mr. G. Ronald Peake, Chief, Division of Housing Assistance, Bureau of Indian Affairs, U.S. Department of the Interior, Washington, D.C. 20245, 202/343-4876.

SUPPLEMENTARY INFORMATION: The Assistant Secretary of Indian Affairs authority to issue these regulations is 5 U.S.C. 301 and Sec. 463 and 465 of the revised statutes (25 U.S.C. 2 and 9) and 209 DM 8.

Note.—The Assistant Secretary of Indian Affairs has determined that this regulation is not a major Federal action within the scope of the National Environmental Policy Act of 1969, 42 U.S.C. 4332(2)(c).

Note.—The Department of the Interior has determined that this document is not a significant rule and does not require a regulatory analysis under Executive Order 12044 and 43 CFR Part 14.

The primary author of this document is: Mr. G. Ronald Peake, Chief, Division of Housing Assistance, Bureau of Indian Affairs, U.S. Department of the Interior, Washington, D.C. 20245, 202/343-4876.

Since the rules contained in these parts merely state the present cost limitations, a notice published as proposed rules would delay the intent of this change which is to increase these cost limitations. Therefore, advance notice and public procedure are dispensed with under the exception provided in 5 U.S.C. 553(b)(B)(1970).

Since these amendments to the present regulations relieve a restriction to the cost limitations, the 30-day deferred effective date is dispensed with under the exception provided in 5 U.S.C. 553(d)(1)(1970). Accordingly, these regulations will become effective January 10, 1980.

The amendments are adopted by revising paragraphs (b)(3) and the first two sentences of (d)(3) as set forth below:

§ 261.4 Program categories.

* * * * *

(b) * * *

(3) The cumulative total expenditure of the Housing Improvement Program funds should not exceed $20,000 for any one dwelling.

* * * * *

(d) * * *

(3) The cumulative total expenditure of funds should not exceed $45,000 for a dwelling and equipment. (In the case of Alaska, the total expenditure of funds should not exceed $55,000.) * * *

* * * * *

Forrest J. Gerard,

Assistant Secretary—Indian Affairs.

[FR Doc. 80-761 Filed 1-9-80; 8:45 am]

BILLING CODE 4310-02-M

PENSION BENEFIT GUARANTY CORPORATION

29 CFR Part 2610

Interim Regulation on Valuation of Plan Benefits; Amendment Adopting Additional PBGC Rates

AGENCY: Pension Benefit Guaranty Corporation.

ACTION: Amendment to the interim regulation.

SUMMARY: This amendment to the interim regulation on Valuation of Plan Benefits prescribes the interest rates and factors the Pension Benefit Guaranty Corporation (the "PBGC") will use to value benefits provided under terminating pension plans covered by Title IV of the Employee Retirement Income Security Act of 1974 (the "Act"). This valuation is necessary because under section 4041 of the Act, the PBGC must determine whether a terminating pension plan has sufficient assets to pay all guaranteed benefits provided under the plan. If the assets are insufficient, the PBGC will pay the unfunded guaranteed benefits under the plan termination insurance program established under Title IV.

The interest rates and factors set forth in the regulation must be adjusted periodically to reflect changes in investment markets. This amendment adopts the rates and factors applicable to plans that terminated on or after September 1, 1979, but before December 1, 1979, and will enable the PBGC to value the benefits provided under those plans.

EFFECTIVE DATE: January 10, 1980.

FOR FURTHER INFORMATION CONTACT: Ms. Nina R. Hawes, Staff Attorney, Office of the General Counsel, Pension Benefit Guaranty Corporation, 2020 K Street NW., Washington, D.C. 20006, 202-254-4895.

SUPPLEMENTARY INFORMATION: On November 3, 1976, the Pension Benefit Guaranty Corporation (the "PBGC") issued an interim regulation establishing the methods for valuing plan benefits of terminating plans covered under Title IV of the Employee Retirement Income Security Act of 1974 (the "Act") (41 FR 48484 *et seq.*). Specifically, the regulation contains a number of formulas for valuing different types of benefits. In addition, Appendix B of the regulation sets forth the various interest rates and factors that are to be used in the formulas. Because these rates and factors must be reflective of investment experience, it is necessary to update the rates and factors periodically. When first published, Appendix B contained interest rates and factors to be used to value benefits in plans that terminated on or after September 2, 1974, but before October 1, 1975. Subsequently, the PBGC adopted additional rates and factors for valuing benefits in plans that terminated on or after October 1, 1975, but before September 1, 1979. (29 CFR 2610 (1979), 44 FR 42180, 44 FR 58908). The purpose of this amendment is to provide the rates and factors applicable to plans that terminated on or after September 1, 1979, but before December 1, 1979.

On April 16, 1979, after public notice and comment, the PBGC adopted a new procedure of issuing new interest rates and factors in final form without first publishing them in a Notice of Proposed Rulemaking (44 FR 22453 *et seq.*). Because the PBGC cannot value the

benefits provided under pension plans that terminated on or after September 1, 1979 and before December 1, 1979 until the new interest rates and factors contained herein are promulgated, and consistent with this new procedure, the PBGC finds that notice of and public comment on this amendment are impracticable and unnecessary. Moreover, because of the need to provide immediate guidance for the valuation of benefits under plans that terminated on or after September 1, 1979, but before December 1, 1979, and because no adjustment by ongoing plans is required by this amendment, the PBGC finds that good cause exists for making this amendment to the interim regulation effective immediately.

The PBGC has determined that this amendment to the Valuation of Benefits regulation is not "significant" under the criteria prescribed by Executive Order 12044, "Improving Government Regulations," 43 FR 12661 (March 24, 1978), and the PBGC's Statement of Policy and Procedures implementing the Order, 43 FR 58237 (December 13, 1978). The reasons for this determination are that this amendment is not likely to engender substantial public interest or controversy, does not affect another Federal agency, and will not have a major economic impact.

In consideration of the foregoing, Part 2610 of Chapter XXVI, Code of Federal Regulations, is hereby amended by adding a new Table XVI to Appendix B to read as follows:

Appendix B—Interest Rates and Quantities Used to Value Benefits

* * * * *

XVI. *The following interest rates and quantities used to value benefits shall be effective for plans that terminate on or after September 1, 1979, but before December 1, 1979.*

I. *Interest rate for valuing immediate annuities.*

An interest rate of 7¾ percent shall be used to value immediate annuities, to compute the quantity "G_y" in § 2610.6 and for valuing both portions of a cash refund annuity.

II. *Interest rate for valuing death benefits.*

An interest rate of 5 percent shall be used to value death benefits other than the decreasing term insurance portion of a cash refund annuity pursuant to § 2610.8.

III. *Interest rates and quantities used for valuing deferred annuities.*

The following factors shall be used to value deferred annuities pursuant to § 2610.6:

(1) $k_1 = 1.07$
(2) $k_2 = 1.0575$
(3) $k_3 = 1.04$
(4) $n_1 = 7$
(5) $n_2 = 8$

(Secs. 4002(b)(3), 4041(b), 4044, 4062(b)(1)(A), Pub. L. 93-406, 88 Stat. 1004, 1020, 1025-27, 1029 (29 U.S.C. 1302(b)(3), 1341(b), 1344, 1362(b)(1)(A)))

Issued at Washington, D.C., on December 20, 1979.

Ray Marshall,
Chairman, Board of Directors, Pension Benefit Guaranty Corporation.

Issued on the date set forth above, pursuant to a resolution of the Board of Directors authorizing its Chairman to issue same.

Henry Rose,
Secretary, Pension Benefit Guaranty Corporation.

[FR Doc. 80-774 Filed 1-9-80; 8:45 am]
BILLING CODE 7708-01-M

DEPARTMENT OF TRANSPORTATION

Coast Guard

33 CFR Part 164

[CGD 77-168]

Navigation Safety Regulations; Electronic Navigation Equipment

AGENCY: Coast Guard, DOT.

ACTION: Final rule.

SUMMARY: This document is to inform the public that the Coast Guard is no longer considering amending the "Interim Final Rule" published on May 31, 1979 (44 FR 31592) and corrected on June 7, 1979 (44 FR 32681), which required vessels of 1600 gross tons or more, when calling at a port in the continental U.S. or Alaska, to have installed a Loran-C or specified alternative electronic navigation receiver. The "Interim Final Rule" included an expansion of the area of applicability in Alaskan Coastal waters, and interested parties were invited to comment on that expansion. No comments have been received. Therefore, there is no need to publish changes to that rule.

EFFECTIVE DATE: This amendment is effective:

1. June 1, 1979, for tank vessels of 10,000 gross tons or more under Section 7 (j) of Section 5 of the Port and Tanker Safety Act of 1978 (Pub. L. 95-474, 92 Stat. 1480);

2. June 1, 1980, for other vessels of 10,000 gross tons or more; and

3. June 1, 1982, for vessels of 1600 but less than 10,000 gross tons.

FOR FURTHER INFORMATION CONTACT: Mr. Fred Schwer, Project Manager, Office of Marine Environment and Systems (G-WLE4/TP11), Room 1608, Department of Transportation, Trans Point Building, 2100 Second Street SW., Washington, D.C. 20593 (202-426-4958).

SUPPLEMENTARY INFORMATION: Drafting Information.—The principal persons involved in drafting of this rule are Mr. Fred Schwer, Project Manager, Office of Marine Environment and Systems, and Mr. Stanley Colby, Project Attorney, Office of Chief Counsel.

The rule, published without change, is set forth below:

§ 164.30 [Amended]

1. By striking in § 164.30, the section number "164.35" and inserting the section number "164.41" in place thereof.

2. By adding a new § 164.41 to read as follows:

§ 164.41 Electronic Position Fixing Devices

(a) This section applies to vessels calling at ports in the continental U.S. including Alaska south of Cape Prince of Wales, except those vessels owned or bareboat chartered and operated by the United States, by a state or its political subdivision, or by a foreign nation, and not engaged in commerce.

(b) Each vessel must have one of the following devices installed:

(1) A Loran-C receiver meeting paragraph (c) of this section.

(2) A continual update, satellite-based hybrid navigation receiver meeting paragraph (d) of this section.

(3) A system that is found by the Commandant to meet the intent of the statements of availability, coverage, and accuracy for the U.S. Coastal Confluence Zone (CCZ) contained in the U.S. "Department of Transportation (DOT) National Plan for Navigation" (Report No. DOT-TST-78-4, dated November 1977). A person desiring a finding by the Commandant under this subparagraph must submit a written request describing the device to: Commandant (G-WLE/73), U.S. Coast Guard, Washington, D.C. 20950. After reviewing the request, the Commandant may require additional information to establish whether or not the device meets the intent of the "DOT National Plan for Navigation."

Note.—The "DOT National Plan for Navigation" is available from the National Technical Information Service, Springfield, VA 22161. Government Accession No. AD-A-052269.

(c) Each Loran-C receiver installed after May 31, 1979 must meet the following:

(1) Be a Type I or II receiver as defined in Section 1.2(e), meeting Part 2

(Minimum Performance Standards) of the Radio Technical Commission for Marine Services (RTCM) Paper 12–78/DO–100 dated December 20, 1977, and entitled "Minimum Performance Standards (MPS) Marine Loran-C Receiving Equipment". The standards referred to in this subparagraph are intended to be incorporated by reference as they exist on December 20, 1977 and notice of any change in these standards will be published in the **Federal Register**. This incorporation by reference was approved by the Director of the Federal Register on May 25, 1979 and is available for inspection at the Office of the Federal Register Library, Room 8401, 1100 L St. NW., Washington, D.C. 20408. The RTMC paper is available from the Radio Technical Commission for Marine Services, P.O. Box 19087, Washington, D.C. 20036 (202) 296–6610.

(2) After June 1, 1982, except as allowed by paragraph (c)(3) of this section, have a permanently affixed label containing—

(i) The name and address of the manufacturer; and

(ii) The following statement:

This receiver was designed and manufactured to comply with Part 2 (Minimum Performance Standards) of the RTCM MPS for Marine Loran-C Receiving Equipment.

(3) Each Loran-C receiver installed before June 1, 1982, that meets paragraph (c)(1) of this section must meet paragraph (c)(2) of this section on June 1, 1985.

(d) Each hybrid satellite system must have—

(1) Automatic acquisition of satellite signals after initial operator settings have been entered;

(2) Position updates derived from satellite information obtained during each usable satellite pass; and

(3) A continual tracking integrated complementary system that provides automatically, in between satellite passes, position updates at intervals of one minute or less.

(e) Each satellite navigation receiver installed before June 1, 1982, that meets paragraphs (d) (1) and (2), of this section must meet paragraph (d)(3) of this section on June 1, 1985.

§ 164.53 [Amended]

3. By adding in § 164.53(b) the words "radio navigation receivers," after the word "radar," "and before the word "gyrocompass,".

(Sec. 2, 92 Stat. 1471 (33 U.S.C. 1221); 49 CFR 1.46(n)(4)).

Dated: January 3, 1980.

R. H. Scarborough,

Vice Admiral, U.S. Coast Guard, Acting Commandant.

[FR Doc. 80–878 Filed 1–9–80; 8:45 am]

BILLING CODE 4910–14–M

---

33 CFR Part 183

[CGD 78–034]

Display of Capacity Information on Recreational Boats

AGENCY: Coast Guard, DOT.

ACTION: Final rule.

SUMMARY: This rule establishes a new format for the capactiy label on certain boats under 20 feet in length. It requires that the persons capacity be stated in terms of the number of persons in addition to the maximum weight of persons, as is presently required. This format for the capacity label and the method of presenting the safe loading capacity information should increase the boat user's understanding of safe loading capacities and enhance boating safety.

EFFECTIVE DATE: This regulation is effective on August 1, 1980; however, manufacturers may voluntarily comply with the regulation any time after publication.

FOR FURTHER INFORMATION CONTACT: Mr. Lars E. Granholm, Office of Boating Safety (G–BBT–2/TP42), 2100 Second Street S.W., U.S. Coast Guard, Department of Transportation, Washington, D.C. 20593, 202–426–4027.

SUPPLEMENTARY INFORMATION: On September 21, 1978, the Coast Guard published a Notice of Proposed Rulemaking in the **Federal Register** (43 FR 43006). Interested persons were invited to participate in the proposed rulemaking by submitting relevant comments. The National Boating Safety Advisory Council has been consulted and its opinions and advice have been considered in the formulation of this final rule. The transcript of the proceedings of the National Boating Safety Advisory Council at which this final rule was discussed is available for examination in Room 4224, U.S. Coast Guard Headquarters Building, 2100 Second Street, S.W., Washington, D.C. The minutes of the meeting are available from the Executive Director, National Boating Safety Advisory Council, c/o Commandant (G–BA), U.S. Coast Guard, Washington, D.C. 20593.

Drafting Information

The principal persons involved in drafting this proposal are: Mr. Lars E. Granholm, Project Manager, Office of Boating Safety, and Ms. Mary Ann McCabe, Project Attorney, Office of Chief Counsel.

Discussion of Comments

Several commenters objected to the proposed effective date of August 1, 1979. They requested that the date be extended. This would provide time for tooling for new plates and also time to use up existing inventories. The Boating Industry Associations, which supplies capacity plates for the majority of the boats built, needs several months after the publication of the final rule to make necessary computer program changes for calculating the number of persons as well as pounds, processing orders, and working out the new format. The Coast Guard agrees to extend the effective date to August 1, 1980, consonant with the policy of issuing minimum regulation. Not to grant the request would impose an unreasonable burden without a corresponding benefit.

These commenters also requested that they be allowed to use the new plates prior to the effective date. This would allow them to start using the new plates when they run out of old ones. The Coast Guard accepts this comment because the new plate is expected to improve boating safety. A manufacturer may voluntarily comply with the rule any time after its publication.

The word "required" is removed from paragraph 183.25(c)(5). This rule does not prohibit additional information from being displayed on a common plate. The intent is that no other information be displayed on the yellow area, whether the additional information is required or optional. The required information is that referred to in paragraphs 183.25(c)(6) and (7), and the certification statement in § 181.5. The optional information might be a certification that a boat meets some additional standards, such as those required by the Boating Industry Associations.

Two commenters requested clarification of how the visibility could be determined as required in paragraph 183.25(a). They pointed out that the markings required cannot be visible to

both the operator and all passengers when getting the boat underway. Some boats have passenger areas so separated from the operator as to make visibility by both passengers and operator impossible. In response to these comments, the Coast Guard has decided to make no change in the present regulation which requires only that the markings be visible to the operator.

One commenter pointed out that the wording in paragraph 183.25(b) is not consistent with the specifications in Figure 183.25. The Coast Guard agrees and the wording in paragraph 183.25(b) is corrected. The same commenter also suggested that the wording in paragraph 183.25(b)(4), "This boat rated for manual propulsion", appears to warrant something the manufacturer does not necessarily intend. For example, on a multipurpose craft for either sail or oars, that statement would raise the question whether the craft was warranted for manual propulsion only. The Coast Guard agrees that the wording could be misinterpreted. For clarification, the wording is changed to read: "This boat not rated for propulsion by motor".

In reviewing § 183.25(c)(1), the Coast Guard noticed one unnecessary requirement. The height of the yellow area was specified to be a minimum of 1¾ inch. This disregarded the fact that the required information has to be displayed in 2, 3, or 4 lines of print depending on how the boat is powered. Thus, an inboard or inboard-outdrive boat which needs only 2 lines of print for its capacity information would have to display that on an area which is high enough for 4 lines of print, resulting in an unnecessarily large lable. Although the cost of the material in a label is relatively low on a per boat basis, the collective cost would represent an unwarranted burden without any corresponding safety benefit. For this reason, the height of the yellow area is specified in § 183.25(c)(1)(ii) as a function of the number of lines of print required.

Some commenters objected to the requirement in paragraph 183.25(c)(3) that "Persons or XXX Pounds" be one-quarter inch high. The reason cited is that the Boating Industry Associations provides its members between 15,000 and 20,000 labels annually for immediate use on new model boats. A computer is used to calculate and print all of the numbers on these labels. The computer is unable to print these numbers in type larger than approximately one-eighth inch high. These labels are provided to boat builders, usually in relatively small quantities, for their initial production of a new line of boats, based on information form prototype production. The manufacturer then orders new capacity plates, in quantity, for subsequent production. However, because of the time required to produce new plates, the computer printed labels are used until new plates are available. Unless the proposal is changed, this service would have to be discontinued.

The main purpose of the proposal was that the persons capacity be stated in numbers of persons in addition to the maximum weight of persons. This is accomplished by the requirements that that number be one-half inch high and black on yellow background. The other numbers shown are of less importance. The Boating Industry Associations has developed a method to affix by hand the number of persons in half-inch figures on the computer produced labels. The service which the Boating Industry Associations provides assures accurate and rapid computation of boat capacities. Discontinuation of this service would not be in the best interest of boating safety. Accordingly, the paragraph is changed to require that only the words in the line "XX Persons XXX Pounds" be one-quarter inch high. The number expressing the persons capacity in pounds may be one-eighth inch high, as are all other numbers on the label except the half-inch number for persons capacity.

The amendment has been reviewed and is not considered a significant rulemaking under the Department of Transportation's "Regulatory Policies and Procedures" (44 FR 11034, February 26, 1979). A final evaluation has been prepared and has been included in the public docket. A copy of the final evaluation may be obtained from: Commandant (G–CMC/TP24), U.S. Coast Guard, 2100 Second Street, S.W., Washington, D.C. 20593.

In consideration of the foregoing, Part 183 of Title 33 of the Code of Federal Regulations is amended as follows:

Subpart B—Display of Capacity Information

1. By revising § 183.23 to read as follows:

§ 183.23 Capacity marking required.

Each boat must be marked in the manner prescribed in § 183.25 and § 183.27 with the maximum persons capacity in whole numbers of persons and in pounds, the maximum weight capacity in pounds, determined under §§ 183.33 through 183.43, and the maximum horsepower capacity determined under § 183.53 or the statement "This Boat Not Rated for Propulsion by Motor".

2. By deleting Figure 183.23

3. By revising paragraphs 183.25 (a) and (b) and adding a new paragraph 183.25(c) and Figure 183.25 to read as follows:

§ 183.25 Display of markings.

(a) Each marking required by § 183.23 must be permanently displayed in a legible manner where it is clearly visible to the operator when getting the boat underway.

(b) The information required by § 183.23 must be displayed in the following manner:

(1) For outboard boats:

U.S. Coast Guard Maximum Capacities

XX Persons or XXX Pounds
XXX Pounds, persons, motor, gear
XXX Horsepower, motor

or

U.S. Coast Guard Maximum Capacities

XX Persons or XXX Pounds
XXX Pounds, persons, motor, gear
XXX Horsepower, motor with remote steering
XXX Horsepower, motor without remote steering

(2) For inboard boats and inboard-outboard boats:

U.S. Coast Guard Maximum Capacities

XX Persons or XXX Pounds
XXX Pounds, persons, gear

(3) For boats rated for motors of 2 horsepower or less:

U.S. Coast Guard Maximum Capacities

XX Persons or XXX Pounds
XXX Pounds, persons, motor, gear
XXX Horsepower, motor

(4) For boats rated for manual propulsion:

U.S. Coast Guard Maximum Capacities

XX Persons or XXX Pounds
XXX Pounds, persons, gear

This Boat Not Rated for Propulsion by Motor

(c) The capacity information displays required in paragraph (b) must meet the following as illustrated in Figure 183.25:

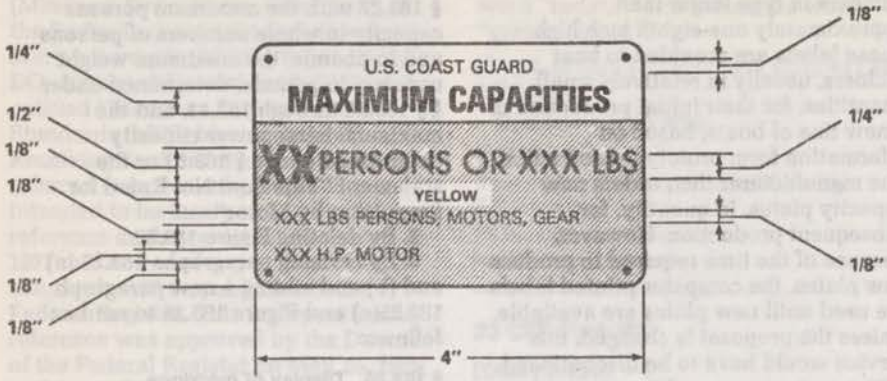

All Dimensions Are Minimum

FIGURE 183.25

(1) The capacity information required in § 183.23 must be displayed within a yellow area that—

(i) Is at least 4 inches wide; and

(ii) Is high enough that each line of print is separated by at least ⅛ inch from each other and from the borders of the yellow area;

(2) The persons capacity in whole numbers must be black print with the following dimensions:

(i) The height must not be smaller than one-half inch;

(ii) The width of the numbers must be three-fifths of the height except for the number "4", which shall be one stroke width wider, and the number "1", which shall be one stroke in width;

(iii) The stroke width shall be one-sixth of the height; and

(iv) The minimum space between the numbers shall be one stroke width.

(3) The words in the line "XX Persons or XXX Pounds" must be at least one-quarter inch in height but not larger than one-half the height of the persons capacity number and of a color contrasting with yellow. The number of pounds in this line must be at least one-eighth inch in height but no larger than one-half the height of the persons capacity number and of a color contrasting with yellow.

(4) All remaining words and numbers required to be within the yellow area required in paragraph (c)(1) must be at least one-eighth inch in height, but no larger than one-half the height of the persons capacity number.

(5) All other words and numbers on the displays must be located outside the yellow area on a background color which contrasts with yellow.

(6) The words "Maximum Capacities" must be at least one-quarter inch in height and of color contrasting with its background.

(7) The words "U.S. Coast Guard" must be at least one-eighth inch in height and of color contrasting with its background.

4. By revising § 183.27 to read as follows:

§ 183.27 Construction of markings.

Each marking required by § 183.23 must be—

(a) Capable of withstanding the combined effects of exposure to water, oil, salt spray, direct sunlight, heat, cold, and wear expected in normal operation of the boat, without loss of legibility; and

(b) Resistant to efforts to remove or alter the information without leaving some obvious sign of such efforts.

Subpart C—Safe Loading

5. By revising § 183.39 to read as follows:

§ 183.39 Persons capacity: Inboard and inboard-outdrive boats.

(a) The persons capacity in pounds marked on a boat that is designed or intended to use one or more inboard engines or inboard-outdrive units must not exceed the lesser of—

(1) The maximum weight capacity determined under § 183.33 for the boat; or

(2) The maximum persons capacity in pounds determined in the following manner:

(i) Float the boat in calm water with all its permanent appurtenances, including installed engines, full fuel system and tanks, control equipment, drive units and batteries.

(ii) Gradually add weights along one outboard extremity of each passenger carrying area, at the height of the seat nearest the center of that area, but no higher than the height of the gunwale and distributed equally forward and aft of that center in a plane parallel to the floorboards, until the boat assumes the maximum list or trim or both, without water coming aboard.

(iii) Compute the persons capacity in pounds in the following formula: Persons capacity=A/0.6 where A is the total of the weights added in paragraph (a)(2)(ii) of this section.

(b) The maximum persons capacity in whole numbers of persons marked on a boat that is designed or intended to use one or more inboard engines or inboard-outboard units must not exceed the value obtained by adding 32 pounds to the value determined in paragraph (a)(2)(iii), dividing the sum by 141 and rounding off the result to the nearest whole number. If the fraction is less than one-half, round down to the next whole integer and if the fraction is equal to or greater than one-half, round up to the next higher whole integer.

6. By revising § 183.41 to read as follows:

§ 183.41 Persons capacity: Outboard boats.

(a) The persons capacity in pounds marked on a boat that is designed or intended to use one or more outboard motors for propulsion must not exceed the lesser of—

(1) The maximum weight capacity determined under § 183.35 for the boat minus the motor and control weight, battery weight (dry), and full portable fuel tank weight from table 4 of Subpart H of this Part; or

(2) The maximum persons capacity in pounds determined by the following test in calm water:

(i) Float the boat with all its permanent appurtenances.

(ii) Add, in normal operating positions, the dry motor and control weight, battery weight, and full portable fuel tank weight, if any, shown in table 4 of Subpart H of this Part for the maximum horsepower capacity marked on the boat. Permanently installed fuel tanks shall be full of fuel.

(iii) Gradually add weights along one outboard extremity of each passenger carrying area, at the height of the seat nearest the center of that area, but no higher than the height of the gunwale, and distributed equally forward and aft of that center in a plane parallel to the floorboards until the boat assumes the maximum list or trim, or both without water coming aboard.

(iv) Compute the persons capacity in pounds using the following formula: Persons capacity=A/0.6 where A is the total of the weights added in paragraph (a)(2)(iii) of this section.

(b) The maximum persons capacity in whole numbers of persons marked on a boat designed or intended to use one or

more outboard motors for propulsion must not exceed the value obtained by adding 32 pounds to the lesser of the values determined in paragraph (a)(1) or (a)(2)(iv), dividing the sum by 141, and rounding off the result to the nearest whole number. If the fraction is less than one-half, round down to the next lower whole integer and if the fraction is equal to or greater than one-half, round up to the next higher whole integer.

7. By revising § 183.43 to read as follows:

§ 183.43 Persons capacity: Boats rated for manual propulsion and boats rated for motors of 2 horsepower or less.

(a) The persons capacity in pounds marked on a boat that is rated for manual propulsion or for motors of 2 horsepower or less must not exceed—

(1) For boats rated for manual propulsion, 90 percent of the maximum weight capacity in pounds; and

(2) For boats rated for motors of 2 horsepower or less, 90 percent of the maximum weight capacity in pounds, less 25 pounds.

(b) The maximum persons capacity, in whole numbers of persons marked on a boat that is rated for manual propulsion must not exceed the value obtained by adding 32 pounds to the value determined in paragraph (a)(1), dividing the sum by 141, and rounding off the result to the nearest whole number. If the fraction is less than one-half, round down to the next lower integer and if the fraction is equal to or greater than one-half, round up to the next higher whole integer.

(c) The maximum persons capacity in whole numbers of persons marked on a boat rated for motors of 2 horsepower or less must not exceed the value obtained by adding 32 pounds to the value determined in paragraph (a)(2), dividing the sum by 141, and rounding off the result to the nearest whole number. If the fraction is less than one-half, round down to the next lower whole integer and if the fraction is equal to or greater than one-half, round up to the next higher whole integer.

Dated: December 26, 1980.

J. B. Hayes,

Admiral, U.S. Coast Guard, Commandant.

[FR Doc. 80-366 Filed 1-9-80; 8:45 am]

BILLING CODE 4910-14-M

ENVIRONMENTAL PROTECTION AGENCY

40 CFR Part 52

[FRL 1387-8]

Approval and Promulgation of Implementation Plans; Mississippi: 1979 Plan Revision

AGENCY: U.S. Environmental Protection Agency, Region IV.

ACTION: Final rule.

SUMMARY: EPA today announces its approval of the State Implementation Plan revision which the Mississippi Air and Water Pollution Control Commission submitted pursuant to the requirements of Part D of Title I of the Clean Air Act, as amended 1977, with regard to nonattainment areas.

DATE: These actions are effective January 10, 1980.

ADDRESSES: Copies of the materials submitted by Mississippi may be examined during normal business hours at the following locations:

Public Information Reference Unit, Library Systems Branch, Environmental Protection Agency, 401 M Street SW., Washington, D.C. 20460

Library, Environmental Protection Agency, Region IV, 345 Courtland Street NE., Atlanta Georgia 30308

Mississippi Air and Water Pollution Control Commission, Robert E. Lee Building, Jackson, Mississippi 39205

FOR FURTHER INFORMATION CONTACT: Mr. Melvin Russell, Region IV, Air Programs Branch, 345 Courtland Street NE., Atlanta, Georgia 30308.

SUPPLEMENTAL INFORMATION:

Background

In the June 19, 1979, **Federal Register** (44 FR 35264) EPA proposed approval of the Mississippi SIP revision for Jones County (Laurel), Mississippi. Jones County was designated nonattainment for Total Suspended Particulate Matter (TSP). An implementation plan revision, under Part D of Title I of the Clean Air Act, was developed by the State and submitted for EPA's approval on March 13, 1979. Receipt of the Mississippi revision was announced in the **Federal Register** of April 4, 1979 (44 FR 20281). The Mississippi revision has been reviewed by EPA in light of the Clean Air Act Amendments of 1977, EPA regulations and additional guidance materials. The criteria utilized in this review were detailed in the **Federal Register** On April 4, 1979 (44 FR 20373), supplemented on July 2, 1979 (44 FR 38583), August 28, 1979 (44 FR 50371), September 17, 1979 (44 FR 53761), and November 23, 1979 (44 FR 67182), and need not be repeated here.

General Discussion

The notice of proposed approval in the June 19, 1979, **Federal Register** (44 FR 35264), discussed each of the requirements of section 172(b) of the Clean Air Act. It was stated that all applicable parts of this section were satisfied.

The sixth paragraph in section 5.3.3. of the revised plan makes the comment that sanctions will not be applied by the U.S. Environmental Protection Agency if the secondary standard is not attained by 1982. However, the State does not have authority to commit EPA to a position of non-enforcement in a particular situation.

The EPA received no comments relevant to the approvability of the revision. Based on the foregoing, EPA approves the Mississippi revision for the attainment of TSP standards in Jones County (Laurel). One commenter submitted extensive comments which it requested be considered part of the record for each state plan. Responses to these comments were included in the "Additional Comments" section of the September 18, 1979 **Federal Register** (44 FR 54047) approving plan revisions for Georgia and are incorporated herein by reference.

Under Section 110(a)(2)(A) of the Act, State Implementation Plans adopted in the early 1970's were to have attained ambient standards in most Regions by 1975, with some exceptions until 1977. Under Section 172(a), plan revisions for areas that still violate the standards are to provide for attainment as expeditiously as practicable, but for primary standards, no later than the end of 1982, or the end of 1987 for very difficult ozone or carbon monoxide problems.

For each nonattainment area where a revised plan provides for attainment by the deadlines under Section 172(a) of the Act, the new deadlines are added to the chart of attainment dates in 40 CFR Part 52, and the corresponding earlier deadlines for attainment under Section 110(a)(2)(A) of the Act are deleted. The earlier attainment dates under Section 110(a)(2)(A) will be referenced in a footnote to the chart. Sources subject to plan requirements and deadlines established under Section 110(a)(2)(A) prior to the 1977 Amendments remain obligated to comply with those requirements, as well as with the new Section 172 plan requirements. However, the earlier deadlines under Section 110(a)(2)(A) found in the 1978 edition of the Code of Federal Regulations will still limit extensions

and variances from compliance schedule dates. Congress established new attainment dates under Section 172(a) to provide additional time for previously regulated sources to comply with new, more stringent requirements and to permit previously uncontrolled sources to comply with newly applicable emission limitations. These new deadlines were not intended to give sources that failed to comply with pre-1977 plan requirements by the earlier deadlines more time to comply with those requirements (see 123 Cong. Rec. H11958, daily ed., Nov. 1, 1977).

For a compliance schedule designed to provide for attainment by the deadline for attainment under Section 110(a)(2)(A), EPA lacks authority to approve an extension or variance for an individual source beyond that deadline except in rare circumstances. The reason is that no extension or variance may be approved if it will cause the plan to fail to comply with the requirements of Section 110(a)(2). An extension beyond the deadline under Section 110(a)(2)(A) will ordinarily result in the plan not providing for attainment of the standard by the deadline. (See *Train* v. *NRDC*, 421 U.S. 60, 70 (1975)). Therefore, EPA may not approve a compliance date variance or any other extension of a compliance requirement beyond the deadline under Section 110(a)(2)(A) merely because a plan revision providing for attainment by the later deadline under Section 172(a) has been approved. (This interpretation is confirmed by legislative history. 123 Cong. Rec. H 11958 (daily ed., November 1, 1977)). Extensions or variances beyond the deadline under Section 110(a)(2)(A) are permitted only in exceptional circumstances such as where (1) the extension or variance would not authorize emission contributing to a violation of an ambient standard or a PSD increment, or (2) new, more stringent emission limits are imposed that are inconsistent with the control required to meet the earlier deadline, and the State has made a case-by-case determination that a limited extension is therefore necessary. (See General Preamble on Proposed Rulemaking, 44 FR 20373–74 (April 4, 1979)).

Reference should be made to the 1978 edition of 40 CFR 52.1273 (1978) to determine the applicable deadlines for attainment under Section 110(a)(2)(A) of the Act.

EPA finds that good cause exists for making this action immediately effective for the following reasons:

(1) Implementation plan revisions are already in effect under state law and EPA approval imposes no additional regulatory burden;

(2) EPA has a responsibility under the Act to take the final action on the portion of the SIP which addresses Part D requirements by July 1, 1979, or as soon thereafter as possible.

Under Executive Order 12044, EPA is required to judge whether a regulation is "significant" and therefore subject to the procedural requirements of the Order or whether it may follow other specialized development procedures. EPA labels these other regulations "specialized." I have reviewed this regulation and determined that it is a specialized regulation not subject to the procedural requirements of Executive Order 12044.

(Section 110 and 172 of the Clean Air Act (42 U.S.C. 7410 and 7502))

Dated: December 31, 1979.

Douglas M. Costle,

Administrator.

Part 52 of Chapter I, Title 40, of the Code of Federal Regulations is amended as follows:

Subpart Z—Mississippi

1. In § 52.1270, paragraph (c) is amended by adding subparagraph (11) as follows:

§ 52.1270 Identification of plan.

* * * * *

(c) The plan revisions listed below were submitted on the dates specified.

* * * * *

(11) Implementation plan revisions for the Jones County, Mississippi total suspended particulate nonattainment area, submitted on March 13, 1979, by the Mississippi Air and Water Pollution Control Commission.

2. Section 52.1272 is revised to read as follows:

§ 52.1272 Approval status.

With the exceptions set forth in this subpart, the Administrator approves Mississippi's plan for the attainment and maintenance of national standards under § 110 of the Clean Air Act. Furthermore, the Administrator finds the plans satisfy all requirements or Part D, Title I, of the Clean Air Act as amended in 1977.

3. Section 52.1273 is revised to read as follows:

§ 52.1273 Attainment dates for national standards.

The following table presents the latest dates by which the national standards are to be attained. These dates reflect the information in Mississippi's plan.

Air quality control region	Pollutant*						
	TSP		SO_2		NO_2	CO	O_3
	Primary	Secondary	Primary	Secondary			
Mobile (Alabama)-Pensacola-Panama City (Florida)							
Gulfport (Mississippi) Interstate:							
(a) Jones County Nonattainment Area*	d	d	b	b	b	b	b
(b) Rest of AQCR	b	b	c	c	b	b	c
Metropolitan Memphis Interstate	c	c	b	b	b	b	c
Mississippi Delta Intrastate	b	b	b	b	b	b	b
Northeast Mississippi Intrastate	a	c	b	b	b	b	b

a. Air quality levels presently below primary standards.
b. Air quality levels presently below secondary standards.
c. June 1975.
d. December 31, 1982.

*Sources subject to plan requirements and attainment dates established under Section 110(a)(2)(A) prior to the 1977 Clean Air Act Amendments remain obligated to comply with those requirements by the earlier deadlines. The earlier attainment dates are set out at 40 CFR § 52.1273 (1978).

[FR Doc. 80-759 Filed 1-9-80; 8:45 am]

BILLING CODE 6560-01-M

40 CFR Part 52

[FRL 1388-1]

Approval and Promulgation of Implementation Plans; Florida, North Carolina, and Tennessee: 18-Month Extensions

AGENCY: Environmental Protection Agency.

ACTION: Final rule.

SUMMARY: EPA announces today that it is granting an 18-month extension of the January 1, 1979 statutory deadline for the submittal of implementation plan revisions providing for the attainment of the secondary national ambient air quality standard for particulate matter, as required under Part D of Title I of the

Clean Air Act, in the following areas: Jacksonville and Tampa, Florida; Spruce Pine, North Carolina; Columbia, Kingsport, Memphis, Nashville and Chattanooga, Tennessee. The States have submitted information showing that none of these areas can attain the secondary standard through the application of reasonably available control technology (RACT). These actions were proposed on September 6, 1979 (44 FR 52000); no comments were received on the proposal.

DATE: These actions are effective January 10, 1980.

ADDRESSES: Copies of the materials submitted by the states in support of the 18-month extension requests may be examined during normal business hours at the following locations:

Air Programs Branch, Environmental Protection Agency, Region IV, 345 Courtland Street NE., Atlanta, Georgia 30308

Public Information Reference Unit, Library Systems Branch, Environmental Protection Agency, 401 M Street SW., Washington, DC 20460

In addition, the materials relating to each request may be examined in the offices of the respective State air pollution control agency.

FOR FURTHER INFORMATION CONTACT: Mr. Walter Bishop, Environmental Protection Agency, Region IV, Air Programs Branch, 345 Courtland Street, N.E., Atlanta, Georgia 30308, (404) 881-3286, or FTS 257-3286.

SUPPLEMENTARY INFORMATION: The Florida Department of Environmental Regulation, in its April 30, 1979, submittal of 1979 implementation plan revisions for nonattainment areas in the State, requested an extension of the deadline for submitting a secondary standard TSP plan for Jacksonville and Tampa and supplied supporting documentation. (The extension request had been the subject of a letter from the agency to EPA on January 16, 1979.) For both areas, the State provided a schedule for developing controls on nontraditional sources of particulate emissions, and showed that RACT alone was inadequate to assure attainment of the TSP ambient standard. In the case of Jacksonville, the State has notified the air pollution control agency of the adjoining State (Georgia) of the extension request since the nonattainment area is in an interstate Air Quality Control Region. Thus, all the requirements of 40 CFR 51.31 governing 18-month extensions have been met, and the request is granted.

In the downtown Jacksonville nonattainment area, RACT is in effect for traditional sources of particulate emissions, and all major sources are in compliance with the embodying emission limits. To meet the secondary standard, fugitive dust controls must be devised on a case-by-case basis. Significant nontraditional sources in the area are motor vehicle traffic and sandblasting of ships.

In the downtown Tampa nonattainment area, RACT is in effect for traditional sources of particulates; all major sources are in compliance except the municipal incinerator, which will shut down in 1980. In addition, fugitive emissions from General Portland Cement and Florida Steel are now being controlled—in the latter case, under a Section 113 Delayed Compliance Order. To meet the secondary standard, controls on other nontraditional sources are needed, and an inventory of such sources must be developed. It is already known from microscopic filter analyses that traffic generated particulates contribute significantly to the problem.

On February 1, 1979, the North Carolina Division of Environmental Management submitted a request for an 18-month extension of the deadline for submittal of a plan to attain the secondary TSP ambient standard in the Spruce Pine nonattainment area. The State had previously shown, in a draft plan revision for the area, that the nonattainment was largely due to fugitive emissions from unpaved roads. EPA concurs that RACT is in effect for all traditional sources in the area. Accordingly, the State's request for an extension is granted.

On May 4, 9, and 17 and June 21, and 22, 1979, the Tennessee Division of Air Pollution Control requested an 18-month extension of the deadline for submitting plan revisions to assure attainment of the secondary TSP ambient standard in Columbia, Kingsport, Nashville, Memphis and Chattanooga. In each case, it has been shown that RACT alone will not suffice to assure the attainment of the standard. In Columbia (Maury County) and Kingsport (Sullivan County), there are many mineral handling operations which contribute significantly to the particulate problem. In Nashville, Memphis and Chattanooga, reentrained particulate matter from traffic is contributing to the nonattainment problem. The air pollution control agencies of the adjoining states (Virginia, Mississippi, Arkansas and Georgia) have been notified of the extension request since the nonattainment areas are in interstate Air Quality Control Regions. The requirements of 40 CFR 51.31 having been satisfied, the Agency grants Tennessee's requests for extensions.

These actions are effective immediately. Plans to attain the secondary ambient standard for TSP in these areas are to be submitted by July 1, 1980.

No change is made in the Florida "Identification of Plan" section (40 CFR 52.520) because the extension request was contained in the 1979 plan revision submittal.

(Section 110(b) of the Clean Air Act (42 U.S.C. 7410(b)))

Dated: December 31, 1979.

Douglas M. Costle,
Administrator.

Part 52 of Chapter I, Title 40, of the Code of Federal Regulations is amended as follows:

Subpart K—Florida

1. Section 52.527 is added as follows:

§ 52.527 Extensions.

(a) The Administrator hereby extends for 18 months (until July 1, 1980) the statutory timetable for submittal of Florida's plans to attain and maintain the secondary ambient standard for particulate matter in the Jacksonville and Tampa nonattainment areas (40 CFR 81.310).

Subpart II—North Carolina

2. In § 52.1770 paragraph (c) is amended by adding subparagraph (20) as follows:

§ 52.1770 Identification of plan.

* * * * *

(c) The plan revisions listed below were submitted on the dates specified.

* * * * *

(20) Request for an 18-month extension of the statutory timetable for submitting a plan to attain and maintain the secondary ambient standard for particulate matter in the Spruce Pine nonattainment area, submitted on February 1, 1979, by the North Carolina Department of Natural Resources and Community Development.

3. Section 52.1776 is added as follows:

§ 52.1776 Extensions.

(a) The administrator hereby extends for 18 months (until July 1, 1980) the statutory timetable for submittal of North Carolina plan to attain and maintain the secondary ambient standard for particulate matter in the Spruce Pine nonattainment area (40 CFR 81.334).

Subpart RR—Tennessee

4. In § 52.2220, paragraph (c) is amended by adding subparagraph (31) as follows:

§ 52.2220 Identification of plan.

* * * * *

(c) The plan revisions listed below were submitted on the dates specified.

* * * * *

(31) Requests for an 18-month extension of the statutory timetable for submitting plans to attain and maintain the secondary ambient standard for particulate matter in the Chattanooga, Columbia, Kingsport, Memphis, and Nashville nonattainment areas, submitted on May 4, 9, and 17, and June 21 and 22, 1979, by the Tennessee Department of Public Health.

5. In § 52.2226 paragraph (b) is added as follows:

§ 52.2226 Extensions.

* * * * *

(b) The Administrator hereby extends for 18 months (until July 1, 1980) the statutory timetable for submittal of Tennessee's plans to attain and maintain the secondary ambient standard for particulate matter in the Chattanooga, Columbia, Kingsport, Memphis, and Nashville nonattainment areas (40 CFR 81.343).

[FR Doc. 80-760 Filed 1-9-80; 8:45 am]
BILLING CODE 6560-01-M

---

40 CFR Part 52

[FRL 1388-6]

Final Rulemaking on Approval of the Montana State Implementation Plan

AGENCY: Environmental Protection Agency.

ACTION: Final rulemaking.

SUMMARY: The purpose of this notice is to approve, in part, the State Implementation Plan (SIP) revision for Montana which was received by EPA on April 24, 1979. On August 2, 1979 (44 FR 45420), EPA published notice of proposed rulemaking which described the nature of the SIP revision, discussed certain provisions which, in EPA's judgment, did not comply with the requirements of the Act, and requested public comment. Several comments were received.

The EPA has reviewed the public comments received on the August 2, 1979, proposal and found that there were no adverse comments on portions of the plan indicated in that notice to be approvable. Therefore, EPA approves the following portions of the SIP:

1. Strategy for Anaconda—Sulfur Dioxide (SO_2) except the portion relating to malfunctions.

2. Strategy for Columbia Falls—Total suspended particulates (TSP).

3. Strategy for East Helena—(TSP).

4. Strategy for Laurel (SO_2).

This action applies only to those parts of the submittal specifically directed toward the four nonattainment areas listed above. It does not cover any general provisions of the Montana SIP revisions such as permits, new sources, etc. Since this rule does not include final action on critical statewide provisions required by Part D (e.g. new source review program requirements in Section 173 of the Act), the ban on construction of major new stationary sources required by Section 110(a)(2)(i) of the Act will remain in effect. At a later date the Agency will take action on the remainder of the Montana SIP items discussed in the August 2, 1979, **Federal Register.** It has been determined that the separation of these approvable portions will expedite the implementation of those portions of the SIP where no public comments were received.

In this notice the portions of the SIP to be approved are summarized and issues relating to the SIP approval are discussed.

EFFECTIVE DATE: Effective January 10, 1980.

ADDRESSES: Comments received on EPA's proposal, EPA's evaluation report, and the SIP submission itself are available for review by any interested persons at:

Environmental Protection Agency, Montana Office, FOB, Drawer 10096, 301 South Park, Helena, Montana 59601

Public Information Reference Unit, Room 2922, 401 M Street SW., Washington, D.C. 20460

Environmental Protection Agency, Region VIII, Regional Library, 1860 Lincoln Street, Denver, Colorado 80295

FOR FURTHER INFORMATION CONTACT: Ivan W. Dodson, Director, Montana Office, Environmental Protection Agency, Region VIII, FOB, Drawer 10096, 301 South Park, Helena, Montana 59601 (406) 449-5432.

SUPPLEMENTARY INFORMATION:

Introduction

The Montana SIP revision was developed and submitted to EPA in response to the requirements of Part D of the Clean Air Act, as amended in 1977. In general, the SIP is required to provide for attainment and maintenance of the national ambient air quality standards (NAAQS) for all areas which have been designated "nonattainment" pursuant to Section 107 of the Clean Air Act. Specific requirements for an approvable SIP are discussed in detail in the April 4, 1979, **Federal Register** (44 FR 20372), supplemented on July 2, 1979 (44 FR 38583), August 28, 1979 (44 FR 50371), September 17, 1979 (44 FR 53761), and November 23, 1979 (44 FR 67182).

On March 3, 1978 (43 FR 8962), pursuant to Section 107 of the Act, EPA designated certain areas as nonattainment for the criteria air pollutants. The designated nonattainment areas in Montana are displayed in Table 1.

TABLE 1—Nonattainment Areas in Montana

	Carbon monoxide	Total suspended particulate (TSP)	Sulphur dioxide (SO_2)	Ozone (O_3)
Anaconda Area			X	
Billings Area	X	X		
Butte Area		X		
Columbia Falls		X		
Colstrip Area		X		
E. Helena Area		X	X	
Great Falls Area		X		
Laurel Area			X	
Missoula	X	X		
Yellowstone County				X

In accordance with Section 174 of the Act, primary responsibility for transportation control planning was delegated by the Governor to organizations of local elected officials. These designated organizations are the Billings-Yellowstone City-County Planning Board, for the Billings-Yellowstone County nonattainment areas, and the Missoula City-County Health Board for the Missoula nonattainment areas. Agreements were developed between the Governor and the local governmental units which generally describe the planning responsibilities of the designated organizations. The State was responsible for technical support to designated agencies, stationary source control, new source review and any other programs encompassing areas beyond the authority of local governments. The designated agencies were generally responsible for transportation control plan development, which were coordinated with the transportation planning process.

The State also delegated that portion of total suspended particulates (TSP) plan development which involved transportation sources to local governmental agencies.

The locally prepared plans were submitted to the State Board of Health in December 1978. Following a public hearing, the Board adopted the SIP and submitted it to the Governor of Montana. The Governor submitted the SIP to EPA on April 24, 1979. EPA noticed the availability of the SIP in the **Federal Register** on May 23, 1979 (44 FR 29931) and requested public comments.

On August 2, 1979, the EPA published a notice of proposed rulemaking

describing the Montana SIP revisions, the issues identified by EPA which could affect approval of the SIP, and the specific portions of the plan which EPA found to be approvable. These approvable portions are (1) Anaconda-SO_2, (2) Columbia Falls-TSP, (3) Laurel-SO_2, and (4) East Helena-TSP. No comments have been received on these approvable portions of the plan revisions.[1]

The Department of Transportation (DOT) has reviewed the SIP and submitted comments to EPA in accordance with the June 16, 1978, EPA-DOT Memorandum of Understanding, and the Region VIII EPA-DOT procedures on SIP review. DOT's comments were considered in preparation of this notice.

This section includes a general discussion of each of the plans to be approved in this notice.

A. Anaconda-SO_2

The Anaconda area violates the national standards for SO_2 as a result of emissions from the nearby Anaconda Copper smelter. Ambient air quality problems near the smelter are two-fold. First, violations occur close to the smelter as a result of excessive fugitive emissions. Second, violations occur in the elevated terrain southwest of the smelter as a result of excessive emissions from the main stack.

The strategy submitted with the SIP addresses both violations with the following requirements:

(1) Emissions of SO_2 from the main stack are limited to (a) 16,800 pounds per hour, maximum 6-hour average, and (b) 11,800 pounds per hour, maximum 24-hour average.

(2) Emissions from the acid plant stack may not exceed 1,000 parts per million, maximum 6-hour average; and

(3) Fugitive emissions must be contained using specifically enumerated good engineering practices and vented through a stack.

The SIP included a diffusion modeling analysis which domonstrates that the low-level emissions will be sufficiently controlled to provide attainment of the national standards close to the smelter. In addition, a modeling analysis performed by EPA as the basis for a federal proposed rulemaking for the smelter (published September 11, 1978, 43 FR 40242) indicates that the proposed limitations will provide for attainment of the national standards in the elevated terrain. The SIP also provided that malfunctions as defined in the SIP would not constitute violations. In the August 2, 1979, notice, it was indicated that the Anaconda malfunction section was acceptable except for its reference to the States general malfunction regulation, ARM 16-2.14(1)-S14000(1). The notice of August 2, 1979, proposed that the State's general malfunction regulation was unacceptable. Further, comments have been received concerning the general malfunction regulations. Therefore, final action on both the Anaconda and Montana's general malfunction regulation will be made after a thorough review of all comments. On the basis of these analyses, EPA is approving the control strategy for Anaconda, Montana, except for the malfunction provision.

B. Columbia Falls-TSP

The area within the city limits of Columbia Falls was designated non-attainment for the primary, annual TSP standard.

A microinventory of emissions was conducted for Columbia Falls in 1978, incorporating point source emission inventory data for Flathead County for 1977. An empirical model was then used to indicate that the largest contributor to TSP in Columbia Falls in fugitive dust from Highway 40 and Nucleus Avenue. The State has committed to rebuild both of these streets and to sweep Nucleus Avenue frequently to remove dirt and mud carried onto it from adjacent unpaved streets. The SIP demonstrates that this will bring the area into compliance.

C. East Helena-TSP

In March 1978, a portion of East Helena was designated nonattainment for the TSP secondary standard. A microinventory was completed using 1977 emission data. The basic conclusion to be drawn from the microinventory and empirical modeling results was that construction activities were the primary cause of the violation. These activities were begun in 1976 and were completed in 1978. Moreover, the ASARCO lead smelter, the other major source, has a written agreement with the State requiring the company to use water and other means, if necessary, to minimize emissions from its slag piles. The combination of these measures will attain the secondary standard.

D. Laurel-SO_2

On September 6, 1979, (44 FR 51977) EPA published a notice of final rulemaking approving the Laurel control strategy for all but the Part D requirements. In the notice of proposed rulemaking of August 2, 1979, (44 FR 45420), EPA proposed to approve the Laurel plan with respect to Part D. Since there were no comments on the proposal and the proposal meets the requirements of the Act, EPA is approving that strategy with respect to Part D.

The 1978 edition of 40 CFR Part 52 lists in the subpart for each state the applicable deadlines for attaining ambient standards (attainment dates) required by section 110(a)(2)(A) of the Act. For each nonattainment area where a revised plan provides for attainment by the deadlines required by Section 172(a) of the Act, the new deadlines will be substituted on the attainment date chart. The earlier attainment dates under section 10(a)(2)(A) will be referenced in a footnote to the chart. Sources subject to plan requirements and deadlines established under section 110(a)(2)(A) prior to the 1977 Amendments remain obligated to comply with those requirements as well as with the new section 172 plan requirements.

Congress established new deadlines under section 172(a) to provide additional time for previously regulated sources to comply with new, more stringent requirements and to permit previously uncontrolled sources to comply with newly applicable emission limitations. If these new deadlines were permitted to supersede the deadlines established prior to the 1977 Amendments, sources that failed to comply with pre-1977 plan requirements by the earlier deadlines would improperly receive more time to comply with those requirements. Congress, however, intended that the new deadlines apply only to new, additional control requirements and not to earlier requirements. As stated by Congressman Paul Rogers in discussing the 1977 Amendments:

> Section 110(a)(2) of the Act made clear that each source had to meet its emission limits "as expeditiously as practicable" but not later than three years after the approval of a plan. This provision was not changed by the 1977 Amendments. It would be a perversion of clear Congressional intent to construe Part D to authorize relaxation or delay of emission limits for particular sources. The added time for attainment of the national ambient air quality standards was provided, if necessary, because of the need to tighten emission limits or bring previously uncontrolled sources under control. Delays or relaxation of emission limits were not generally authorized or intended under Part D. (123 Cong. Rec. H 11958, daily ed. November 1, 1977.)

To implement fully Congress intention that sources remain subject to pre-

[1] One commentor submitted extensive comments which it requested be considered as part of the record for each State plan. Although many of these comments are not relevant to the Montana plan and none are relevant to the portions of the Montana plan being approved today, EPA has placed its response to those comments in the Regional Office docket and the Public Information Reference Unit in Washington, D.C.

existing plan requirements, sources cannot be granted variances extending compliance dates beyond attainment dates established prior to the 1977 Amendments. Such variances would impermissibly relax existing requirements beyond the applicable section 110(a)(2)(A) attainment date under the plan. Therefore, for requirements adopted before the 1977 Amendments, EPA cannot approve a compliance date extension beyond pre-existing 110(a)(2)(A) attainment dates, even though a Section 172 plan revision with a later attainment date has been approved. However, a compliance date extension beyond the pre-existing attainment date may be granted if it will not contribute to a violation of any ambient standard or a PSD increment.[2]

EPA finds that good cause exists for making this action immediately effective for the following reasons:

(1) Implementation plan revisions are already in effect under state law and EPA approval imposes no additional regulatory burden;

(2) EPA has a responsibility under the Act to take final action on the portion of the SIP which addresses Part D requirements by July 1, 1979, or as soon thereafter as possible.

Under Executive Order 12044, EPA is required to judge whether a regulation is "significant" and therefore subject to the procedural requirements of the Order or whether it may follow other specialized development procedures. EPA labels these other regulations "specialized." I have reviewed this regulation and determined that it is a specialized regulation not subject to the procedural requirements of Executive Order 12044.

This rulemaking action is issued under the authority of Section 110 of the Clean Air Act, as amended.

Dated: January 4, 1980.

Douglas M. Costle,

Administrator.

Title 40, Part 52 of the Code of Federal Regulations is amended as follows:

Subpart BB—Montana

1. § 52.1370 paragraph (c)(7) is added as follows:

§ 52.1370 Identification of plan.

* * * * *

(C) * * *

(7) On April 24, 1979, the Governor submitted the nonattainment area plan for Anaconda—Sulfur Dioxide, Laurel—Sulfur Dioxide, Columbia Falls—Total Suspended Particulates, and East Helena—Total Suspended Particulate.

2. Section 52.1372 is revised to read as follows:

§ 52.1372 Approval status.

With the exceptions set forth in this subpart, the Administrator approves Montana's plans for the attainment and maintenance of the national standards under Section 110 of the Clean Air Act. Furthermore, the Administrator finds the plans satisfy all requirements of Part D, Title I, of the Clean Air Act as amended in 1977, except as noted below.

3. Section 52.1375 is revised to read as follows:

§ 52.1375 Attainment dates for national standards.

The following table presents the latest dates by which the national standards are to be attained. These dates reflect the information presented in Utah's plan, except where noted.

Air quality control region	Pollutant						
	Particulate matter		Sulfur oxides		Nitrogen dioxide	Carbon monoxide	Ozone
	Primary	Secondary	Primary	Secondary			
Billings Intrastate:							
a. Yellowstone County	c	c	a	c	b	b	f
b. Billings	f	f	a	c	b	b	f
c. Laurel	c	c	e	e	b	b	f
d. Remainder of AQCR	c	c	a	c	b	b	b
Great Falls Intrastate:							
a. Great Falls	f	f	c	c	b	b	b
b. Remainder of AQCR	b	b	c	c	b	b	b
Helena Intrastate:							
a. Anaconda	b	b	e	e	b	b	b
b. East Helena	e	e	f	f	b	b	b
c. Butte	f	f	b	b	b	b	b
d. Remainder of AQCR	b	v	b	b	b	b	b
Miles City Intrastate:							
a. Colstrip	f	f	b	b	b	b	b
b. Remainder of AQCR	b	b	b	b	b	b	b
Missoula Intrastate:							
a. Missoula	f	f	b	b	b	f	b
b. Columbia Falls	e	e	b	b	b	b	b
c. Remainder of AQCR	c	c	b	b	b	b	b

a. Air quality levels presently below primary standards or area is unclassifiable.
b. Air quality levels presently below secondary standards or area is unclassifiable.
c. July 1975.
d. May 31, 1977.
e. December 31, 1982.
f. Action on the SIP for this nonattainment area has been delayed.

NOTE.—Footnotes which are italic are prescribed by the Administrator because the plans do not provide a specific date, or the date provided is not acceptable.

NOTE.—Sources subject to plan requirements and attainment dates established under Section 110(a)(2)(A) of the Act prior to the 1977 Clean Air Act Amendments remain obligated to comply with those requirements by the earlier deadlines. The earlier attainment dates are set out at 40 CFR 52.325.

[FR Doc. 80-849 Filed 1-9-80; 8:45 am]

BILLING CODE 6560-01-M

[2] See General Preamble for Proposed Rulemaking 44 FR 20373-74 (April 4, 1979).

---

40 CFR Parts 52, 81

[FRL 1388-3]

Massachusetts Revisions; State Implementation Plans

AGENCY: Environmental Protection Agency (EPA).

ACTION: Final rule.

SUMMARY: The purpose of this Notice is to conditionally approve the State Implementation Plan (SIP) revisions for the Commonwealth of Massachusetts which were submitted to the EPA on March 30, 1979 and May 3, 1979 by the Commissioner of the Massachusetts Department of Environmental Quality Engineering (DEQE). These plan revisions were prepared by the state to meet the requirements of Part D (Plan Requirements for Non-Attainment Areas) for Total Suspended Particulates (TSP) in Worcester, new source review (NSR) requirements throughout Massachusetts in areas which are non-attainment for any pollutant, and certain other sections of the Clean Air Act (the Act), as amended in 1977 (42 U.S.C. 7401 et seq). The plan revisions acted upon today constitute a portion of the revisions which the state prepared to meet the requirements of Part D. Revisions for the ozone and CO nonattainment areas will be proposed and finalized at a later date. On July 16, 1979 (44 FR 41258) EPA published a Notice of Proposed Rulemaking which

described the SIP revisions and EPA's proposed action and which requested public comment. Four letters of comment were received.

EPA reviewed the comments and the plan revisions in light of the Clean Air Act Amendments of 1977, EPA regulations and additional guidance. The criteria used in this review were detailed in the general preamble published in the April 4, 1979 **Federal Register** (44 FR 20372), supplemented on July 2, 1979 (44 FR 38583), August 28, 1979 (44 FR 50372), September 17, 1979 (44 FR 53761), and November 23, 1979 (44 FR 67182).

In this Notice EPA also is amending 40 CFR Part 81 to redesignate the attainment status of several areas and approving a request from DEQE for an 18 month extension of the deadline for submittal of TSP secondary standard attainment plans.

EFFECTIVE DATE: January 10, 1980.

FOR FURTHER INFORMATION CONTACT: Frank Ciavattieri, Air Branch, Environmental Protection Agency, Region I, Room 1903 JFK Federal Building, Boston, Massachusetts 02203. (617)223-5609.

ADDRESSES: Copies of the SIP revision and comments received are available for public inspection during normal business hours at the Environmental Protection Agency, Region I, Room 1903, JFK Federal Building, Boston, Massachusetts 02203; Public Information Reference Unit, Environmental Protection Agency, 401 M Street, S.W., Washington, DC 20460; and the Massachusetts Department of Environmental Quality Engineering, Division of Air and Hazardous Materials, Room 320, 600 Washington Street, Boston, Massachusetts 02111.

SUPPLEMENTARY INFORMATION: On July 16, 1979 the Regional Administrator of EPA's Region I published a notice of proposed rulemaking in the **Federal Register** (44 FR 41258), proposing the following actions:

(1) To conditionally approve the TSP primary standard attainment plan for the City of Worcester, upon submittal of narrative amendments within 30 days after publication of the proposal and adoption of a regulation by March 1, 1980 to resolve the new source review issues (which also affect areas which are non-attainment for other pollutants), and submittal by January 1, 1980 of a comprehensive plan for public participation during continued development of the Worcester plan; in addition, EPA proposed to disapprove or take no action on certain regulation changes, but this does not affect the attainment strategy for Worcester.

(2) To take final action at a later date on amendments to 40 CFR Part 81, Subpart C, Section 107 Attainment Status Designations, concerning the redesignations of the TSP primary standard non-attainment areas requested by DEQE, provided that the additional material to be submitted by DEQE is found to be adequate.

(3) To grant the request for an 18-month extension for submittal of a TSP SIP revision for those areas designated as non-attainment for the secondary standard. EPA also proposed to approve, with certain exceptions, the statewide regulation changes which were submitted in conjunction with the secondary standard attainment plan extension request.

(4) To approve the portion of the Massachusetts submittal which shows compliance with the requirements of Section 128 of the Act.

Description of Proposal

Worcester TSP Attainment Plan

The traditional source component of the control strategy for Worcester consists of regulations adopted by the DEQE and submitted on March 30, 1979 for EPA approval as revisions to the SIP.

In addition to changes which clarify existing regulations, the revisions add new emission limitations (particulate emission limitations for fuel burning sources in Worcester) and require additional measures to help reduce emissions, such as prohibition of removal of pollution control or monitoring equipment expanded to cover all source categories; and annual inspection, maintenance and testing program for fossil fuel burning facilities; installation of viscosity controllers; prohibition in Worcester of unapproved burners and of natural draft secondary combustion air supply; measures to prevent dust emission during construction/demolition. The DEQE considers these regulations as they apply to existing sources to reflect the application of reasonably available control technology (RACT). Regulations covering new sources, sulfuric acid mist and nitrogen oxide emissions, and storage vessels for petroleum liquids were also submitted by DEQE.

Non-traditional source control measures are the other component of the attainment plan. The submittal includes a schedule for developing a plan to reduce deposition and accumulation of road sand and dust, with July 1, 1982 as the date for finalizing agreements between the City of Worcestor and the DEQE on practices to be employed. A joint task force, comprised of representatives from the Worcester Public Works Department, Worcester Health Department, Worcestor City Manager's Office, and the DEQE's Central Massachusetts Air Pollution Control District Office, was formed on June 22, 1976 to study the problem, and will be responsible for evaluating and selecting alternatives in accordance with the schedule provided in the plan.

At present, experiments to evaluate the effectiveness of various control measures include using salt instead of sand in the Central Business District, establishment of salt-only routes, purchase of automated sanders, use of a wetted salt technique (calcium chloride instead of sodium chloride), and use of a new vacuum sweeper.

The proposed control strategy is based on an accurate, comprehensive, and current inventory of existing emissions from point, area (including non-traditional), and mobile sources and a determination of emissions/air quality relationships through TSP filter analyses which indicated the level of control needed to attain the National Ambient Air Quality Standards (NAAQS). Emission reductions to be achieved by each measure (primarily conversions from rotary cup burners by 1980, phasing out of coal use in the public schools by 1980, and changes in winter sanding and salting practices) have been estimated. The plan demonstrates attainment of both TSP primary standards (24-hour and annual) by 1979 through existing source control and continuing progress towards attainment of the secondary standard. The revision includes an identification of growth rates which are consistent with the growth rates used by other planning programs in the area. The DEQE will report to EPA annually on the effectiveness of the control strategy in controlling emissions from new and existing sources.

EPA proposed approval of the non-traditional source component of the control strategy. Approval of the regulations for control of traditional sources also was proposed, except for Regulations 310 CMR 7.02(8) and 7.02(12), on which no action will be taken, and amendments to Regulations 310 CMR 7.02(2)(d), 7.02(8), and 7.02(9), which EPA proposed to disapprove.

Regulation 310 CMR 7.02(8), which changes the nitrogen oxide emission limitation for new fossil fuel utilization facilities, and Regulation 310 CMR 7.02(12), which requires monitoring of operations of petroleum liquids, will be considered in a future **Federal Register** notice. The regulations proposed for disapproval, which affect public comment procedures, solid fossil fuel-fired facilities in Worcester, and asphalt batch plants, are not required by Part D

of the Act, and disapproval would not affect the projected emission reductions upon which the control strategy is based, nor lead to the imposition of sanctions contained in the Act.

Sections 172(b)(6) and 173 of the Act require that permits be issued subject to certain conditions for construction and operation of major new or modified sources in non-attainment areas. In order to satisfy these new source review requirements, the DEQE adopted EPA's Emission Offset Interpretative Ruling (EOIR), as published in the January 16, 1979 **Federal Register** (44 FR 3282), by adding a new condition for approval as Regulation 310 CMR 7.02(2)(b)(5), and submitted this change on May 3, 1979. This regulation now provides that no approval be issued unless a subject facility complies with the requirements of the EOIR. These requirements are found in 40 CFR Part 51 as a new Appendix S (44 FR 3282). Any new or modified source with potential emissions of 100 tons per year or more of the NAAQS pollutants will be subject to the EOIR requirements.

In adopting the EOIR, DEQE has chosen the emissions "offset" approach authorized by Section 173(1)(A) of the Act. However, the EOIR allows an exemption from its requirements for major sources with allowable emissions of less than 50 tons per year. Further, DEQE's submittal did not contain a regulation to require that the proposed source's emissions be consistent with reasonable further progress towards attainment as provided for in the SIP. Adoption of a regulation equivalent to Section 173(1)(A) would give DEQE the legal authority to deny a permit if the proposed source's emissions would be inconsistent with reasonable further progress, and would mean that emission reductions can be used to offset new major source growth only to the extent that they are not otherwise required for reasonable further progress towards attainment of the NAAQS.

The requirements of sections 173(2) and 173(3) are met by DEQE's adoption of the EOIR. The EOIR requires the source to meet an emission limitation representing the lowest achievable emission rate, and require a certification that all major sources owned or operated by the permit applicant are in compliance with applicable emission limitations and standards.

The EOIR requires that emission offsets be enforceable before a permit may be issed, and thus satisfies the requirement in the last sentence of Section 173, but the narrative portion of the SIP revision did not include an explanation of how this requirement will be implemented.

DEQE did not establish procedures or submit regulations for the "banking"and future use of the excess emission reductions. This means that, until such rules are adopted and submitted to EPA for inclusion in the SIP, any banked emission offsets can be tabulated for future use (assuming they were obtained in a manner consistent with the EOIR), but might not be able to be credited or used against new emissions.

EPA proposed conditional approval of the Massachusetts new source review and permit program. The conditions which were agreed to by DEQE are the following:

Within 30 days after publication of the proposed rulemaking notice:

(1) A change in the narrative portion of the SIP revision was to be submitted to clarify that the growth projections for minor sources include sources with allowable emissions of less than 50 tons per year.

(2) A section was to be added to the narrative portion of the SIP revision to describe how the legal enforceability of any emission offsets obtained will be effected.

No later than March 1, 1980:

(3) A regulation governing construction and operation of major new and modified sources will be adopted which specifies that by the time the source is to commence operation, total allowable emissions from (1) existing sources, (2) new or modified sources which are not major emitting facilities, and (3) the proposed source will be sufficiently less than total allowable emissions from existing sources prior to the permit application, so as to represent reasonable further progress; the narrative portion of the SIP revision will be amended accordingly.

As was noted in the proposal, the Reasonable Further Progress (RFP) requirement of Section 173(1)(A) is discussed only with specific reference to the Worcester TSP Primary Standard Attainment Plan: the RFP requirement and the technical adequacy of the program with respect to the carbon monoxide and ozone attainment plans will be addressed in a separate **Federal Register** notice.

EPA proposed approval of DEQE's resource commitments as satisfying Section 172(b)(7) of the Act.

Development of the Worcester attainment plan included three public hearings and local official involvement in a joint task force. Although the DEQE documented involvement by the public, local and state officials in determining the substance of these revisions in accordance with Section 172(b)(9), the SIP revision does not include a public participation program during development of the plan to control non-traditional sources in Worcester.

EPA proposed to approve the public participation and involvement efforts to date and to approve the long-term public participation element conditioned upon compliance with grant conditions to be contained in Massachusetts Fiscal Year 1980 program grant under Section 105 of the Act.

Other Non-Attainment Areas

Attainment plans were not prepared for the remaining areas identified in the March 3, 1978 **Federal Register** as not meeting the primary NAAQS for TSP. The July 16, 1979 **Federal Register** notice of proposed rulemaking discussed the attainment status redesignations requested by DEQE on March 30, 1979, and proposed redesignation of the following areas:

(1) Boston—from non-attainment for the primary standard to unclassifiable, based upon a showing that two TSP monitors were unduly influenced by traffic-reentrained road dust, and that temporary construction influenced the TSP levels recorded at another monitor.

(2) Danvers—from primary to secondary non-attainment, provided that DEQE submitted documentation to support the allegation that the data were invalid due to poor quality assurance procedures in operation of the TSP monitor.

(3) Springfield—from primary to secondary non-attainment, based on a showing that the TSP monitor was unduly influenced by traffic-reentrained road dust.

The DEQE did not submit secondary standard attainment plans for the areas in the state which still do not meet the secondary NAAQS for TSP. Instead, on March 30, 1979, DEQE requested an 18-month extension of the deadline for submittal of a secondary standard attainment plan, as provided for in Section 110(b) of the Act and EPA regulations in 40 CFR 51.31. The basis for DEQE's request is that application of all reasonably available control measures would be insufficient to attain secondary standards. DEQE's request was accompanied by a schedule for plan development, with a submittal date of July 1, 1980.

In conjunction with the extension request, DEQE submitted several statewide regulation changes for EPA approval as revisions to the SIP. The DEQE considers the revised regulations to reflect the statewide application of reasonably available control technology. These regulations are the same as were submitted for the Worcester area as part of the Worcester primary standard

attainment plan and were described previously.

EPA proposed to grant the 18-month extension, which means that the secondary standard attainment plans would be due by July 1, 1980, and to approve the statewide regulation changes as revisions to the Massachusetts SIP with the exceptions previously discussed.

Non-Part D Requirements

The **Federal Register** proposal discussed Massachusetts' responses to certain general requirements of the Act, which are not part of the attainment plans required under Part D. EPA proposed approval of the Massachusetts SIP as satisfying the requirements of Section 128 pertaining to state boards. EPA proposed no action on the following issues, either because Massachusetts has not submitted the required SIP revisions or because EPA has not yet promulgated necessary regulations: Section 126, Interstate Pollution; Part C and Section 110(a)(2)(D), Prevention of Significant Deterioration; Sections 110(a)(2)(C) and 319, Air Quality Monitoring; Section 110(a)(2)(K), Permit Fees; Section 121, Consultation; and Section 123, Stack Heights.

Discussion of Comments Received

During the 30-day public comment period following publication of the **Federal Register** notice of proposed rulemaking, four letters of comment were received, including one from the DEQE. Copies of the comments are available for public inspection at the addresses listed in the beginning of this notice.

DEQE's submittal (a letter dated August 7, 1979 from Thomas F. McLoughlin, Acting Commissioner, to William R. Adams, EPA Region I Regional Administrator, enclosing two addenda, an appendix, and an attachment) addresses the conditions for approval of the Worcester TSP Attainment Plan and includes additional material to support the proposed attainment status redesignation for Danvers, and will become part of the SIP.

Conditions for Approval of Worcester TSP Attainment Plan

New Source Review:

The DEQE has stated that the TSP emissions growth projections used to develop the RFP line include major sources with allowable emissions of less than 50 tons per year which were exempted from the offset requirement of the preconstruction permit review program. This satisfies item 1 under "Issues" in the first column on page 41262 of the July 16, 1979 **Federal Register** proposal.

The submittal also includes a new section to be added to the narrative portion, entitled "Enforcement Procedures," which states that an applicant's certified legally binding emission reductions will be made a condition of the approval to construct. The EOIR, which the DEQE has adopted, contains additional provisions relating to the enforceability of emission reductions. The state has satisfied item 2 under "Issues" in the first column on page 41262 of the proposal.

The DEQE has agreed to adopt and submit the regulation described in item 3 under "Issues" in the first column on page 41262 of the proposal by March 1, 1980.

Public Participation:

The state has agreed to comply with grant conditions listed in item 2 under "Proposed Action" in the second column on page 41262 of the proposal, which include submittal of a comprehensive plan for public participation. Although the submittal date agreed to at the time of the proposal was January 1, 1980, EPA and the state have agreed that the plan will be submitted on March 31, 1980 due to unavoidable delays in the state's hiring of a public participation staff person. Additionally, although EPA had intended to hold a training course for public participation staff people during the summer, it is now scheduled for early December. Since the change is not significant and the deadline is short, EPA is not reproposing this condition before final rulemaking today.

Supporting Material for Attainment Status Redesignation

Danvers:

The state requested that Danvers be redesignated from primary to secondary standard non-attainment for TSP, but provided limited support for this request. Accordingly, a new "Appendix O" was submitted during the comment period, consisting of a letter from Ventron Corporation, which operates the monitor, to the state. The letter describes in detail the timer malfunctions occurring on the two days when 24-hour primary violations were recorded, as well as a calibration errror. It also explains that the state conducted no audits and that Ventron had not yet prepared a quality assurance procedure document during the start-up period. Finally, it points out that not even secondary standard violations have occurred recently at the monitor in question.

The submittal has been reviewed by EPA and found to be acceptable. Therefore, Danvers will be redesignated under 40 CFR Part 81 from primary to secondary standard non-attainment for TSP.

One commenter submitted extensive comments which it requested be considered part of the record for each state plan. Each of the points raised by the commenter and EPA's response follow. Although some of the issues raised are not relevant to provisions in Massachusetts' submission, EPA is notifying the public of its response to these comments at this time.

1. The commenter asked that comments it has previously submitted on the Emission Offset Interpretative Ruling as revised on January 16, 1979 (44 FR 3274), be incorporated by reference as part of their comments on each state plan. EPA will respond to those comments in its response to comments on the Offset Ruling.

2. The commenter objected to general policy guidance issued by EPA, on grounds that EPA's guidance is more stringent than required by the Act. Such a general comment concerning EPA's guidance is not relevant to EPA's decision to approve or disapprove a SIP revision since that decision rests on whether the revision satisfies the requirements of Section 110(a)(2). However, EPA has considered the comment and concluded that its guidance conforms to the statutory requirements.

3. The commenter noted that the recent court decision on EPA's regulations for prevention of significant deterioration (PSD) of air quality affects EPA's new source review (NSR) requirements for Part D plans as well. (The decision is *Alabama Power Co.* v. *Costle*, 13 ERC 1225 (D.C. Cir., June 18, 1979). In the commenter's view, the court's rulings on the definition of "source," "modification," and "potential to emit" should apply to Part D as well as PSD programs. In addition, the commenter believes that the court decision precludes EPA from requiring Part D review of sources located in designated clean areas.

The preamble to the Emission Offset Interpretative Ruling, as revised January 16, 1979, explains that the interpretations in the Ruling of the terms "source," "major modification," and "potential to emit," and the areas in which NSR applies, govern State plans under Part D. (44 FR 3275 col. 3 through 3276 col. 1, January 16, 1979.) In proposed rules published in the **Federal Register** on September 5, 1979 (44 FR 51924), EPA explained its views on how the *Alabama Power* decision affects NSR requirements for State Part D plans. The September 5, 1979 proposal

addressed some of the issues raised by the commenter. To the extent necessary, EPA will respond in greater detail to the commenter's concerns in its response to comments on the September 5, 1979 proposal and/or its response to comments on the Offset Ruling.

As part of the September 5, 1979 proposal, EPA proposed regulations for Part D plans in section 40 CFR 51.18(j). EPA also proposed, for now, to approve a SIP revision if it satisfies either existing EPA requirements, or the proposed regulations. Prior to promulgation of final regulations, EPA proposed to approve State-submitted relaxations of previously-submitted SIPs, as long as the revised SIP meets all proposed EPA requirements. To the extent EPA's final regulations are more stringent than the existing or proposed requirements, States will have nine months, as provided in Section 406(d) of Pub. L. 95-95 to submit revisions after EPA promulgates the final regulations. Since the Massachusetts NSR program satisfies existing requirements for Part D, it is now being approved.

In some instances, EPA's approval of a State's NSR provisions, as revised to be consistent with EPA's proposed or final regulations, may create the need for the State to revise its growth projections and provide for additional emission reductions. States will be allowed additional time for such revisions after the new NSR provisions are approved by EPA.

4. The commenter questioned EPA's alternative emission reduction options policy (the "bubble" policy). As the commenter noted, EPA has set forth its proposed bubble policy in a separate Federal Register publication, 44 FR 3720 (January 18, 1979). EPA will respond to the comments on the "bubble" approach in the final "bubble" policy statement.

5. The commenter questioned EPA's requirement for a demonstration that application of all reasonably available control measures (RACM) would not result in attainment any faster than application of less than all RACM. In EPA's view, the statutory deadline is that date by which attainment can be achieved as expeditiously as practicable. If application of all RACM results in attainment more expeditiously than application of less than all RACM, the statutory deadline is the earlier date. While there is no requirement to apply more RACM than is necessary for attainment, there is a requirement to apply controls which will ensure attainment as soon as possible. Consequently, the State must select the mix of control measures that will achieve the standards most expeditiously, as well as assure reasonable further progress.

The commenter also suggested that all RACM may not be "practicable." By definition, RACM are only those measures which are reasonable. If a measure is impracticable, it would not constitute a reasonably available control measure.

6. The commenter found the discussion in the General Preamble of reasonably available control technology (RACT) for VOC sources covered by Control Technique Guidelines (CTGs) to be confusing in that it appeared to equate RACT with the guidance in the CTGs. EPA did not intend to equate RACT with the CTGs. The CTGs provide recommendations to the States for determining RACT, and serve as a "presumptive norm" for RACT, but are not intended to define RACT. Although EPA believes its earlier guidance was clear on this point, the Agency has issued a supplement to the General Preamble clarifying the role of the CTGs in plan development. See 44 FR 53761 (September 17, 1979).

7. The commenter suggested that the revision of the ozone standard justified an extension of the schedule for submission of Part D plans. This issue has been addressed in the General Preamble, 44 FR 20377 (April 4, 1979).

8. The commenter questioned EPA's authority to require States to consider transfers of technology from one source type to another as part of LAER determinations. EPA's response to this comment will be included in its response to comments on the revised Emission Offset Interpretative Ruling.

9. The commenter suggested that if a State fails to submit a Part D plan, or the submitted plan is disapproved, EPA must promulgate a plan under Section 110(c), which may include restrictions on construction as provided in Section 110(a)(2)(I). In the commenter's view, the Section 110(a)(2)(I) restrictions cannot be imposed without such a federal promulgation. EPA has promulgated regulations which impose restrictions on construction in any non-attainment area for which a State fails to submit an approvable Part D plan. See 44 FR 38583 (July 2, 1979). Section 110(a)(2)(I) does not require a complete federally-promulgated SIP before the restrictions may go into effect.

Another commenter, a national environmental group, stated that the requirements for an adequate permit fee system (Section 110(a)(2)(K) of the Act), and proper composition of State boards (Sections 110(a)(2)(F)(vi) and 128 of the Act) must be satisfied to assure that permit programs for non-attainment areas are implemented successfully. Therefore, while expressing support for the concept of conditional approval, the commenters argued that EPA must secure a State commitment to satisfy the permit fee and State board requirements before conditionally approving a plan under Part D. In those States that fail to correct the omission within the required time, the commenters urged that restrictions on construction under Section 110(a)(2)(I) of the Act must apply.

To be fully approved under Section 110(a)(2) of the Act, a State plan must satisfy the requirements for State boards and permit fees for all areas, including non-attainment areas. Several States have adopted provisions satisfying these requirements, and EPA is working with other States to assist them in developing the required programs. However, EPA does not believe these programs are needed to satisfy the requirements of Part D. Congress placed neither the permit fee nor the State board provision in Part D. While legislative history states that these provisions should apply in non-attainment areas, there is no legislative history indicating that they should be treated as Part D requirements. Therefore, EPA does not believe that failure to satisfy these requirements is grounds for conditional approval under Part D, or for application of the construction restriction under Section 110(a)(2)(I) of the Act.

The remaining comments, which are specific to Massachusetts' submittal, are discussed below by topic:

Worcester TSP Attainment Plan

Control Strategy:

(1) One commenter stated that the plan does not adequately demonstrate that the elimination of coal burning in the schools will provide the necessary emission reductions and that reliance on this measure has not been justified because there is no assessment of the number and status of schools out of compliance and no indication that the DEQE, the Attorney General, or the school board are acting on the matter. The commenter recommended approval conditioned upon a demonstration of steps sufficient to bring the schools into compliance and submittal of binding schedules for compliance for all schools.

Based on these comments, EPA requested and received from the DEQE additional information (a letter dated October 16, 1979 from Kenneth A. Hagg, Acting Director, to Frank Ciavattieri, EPA Air Branch Chief) to support their statements that action will be taken by December 31, 1979 and that emission reductions from coal-burning schools will occur during 1980. The letter is available for public inspection at the

addresses listed in the beginning of this notice.

The material submitted by DEQE describes the schools, their emissions, proposed emission reduction measures and resultant emissions, and the status of the Attorney General's actions. The submittal indicates that compliance with the regulations and the emission reductions realistically can be expected during 1980. EPA will review DEQE's annual report to determine whether the necessary action has been taken by the end of 1979 and whether the projected emission reductions have occurred during 1980.

(2) The same commenter stated that the letter of commitment from the City of Worcester does not contain the necessary assurances that the required emission reductions will be achieved by the non-traditional control stategy, since the reduction in road sanding upon which the plan relies is voluntary. The commenter stated that the attainment plan must contain commitments not to exceed the sanding levels which the plan expects. The commenter also felt that the schedule for evaluation and selection of control measures has not been shown to be as expeditious as practicable and that actual emission reductions should occur before the July, 1982 date for final adoption of control measures.

EPA believes that the plan contains enforceable commitments to non-traditional emission reductions. The DEQE has provided for yearly emission reductions representing reasonable further progress, based on estimates of the amount of reductions needed for attainment, and has committed to a schedule for development and adoption of non-traditional control measures by July 1, 1982. Further, EPA finds the schedule to be reasonable and expeditious. Experiments with new salt techniques, modernization of sanding equipment, and purchase of new vehicles will require a full winter season for implementation. Evaluation of cost and feasibility is expected to be a complex process. Selection of a specific strategy will require coordination with many public agencies, including the city health and public works departments, as will the negotiation and signing of agreements.

(3) The same commenter recommended that approval be conditioned on the development of an updated emission inventory.

At the time the attainment plan was being developed, the 1975 emission inventory was the most accurate, comprehensive, and current inventory of existing emissions. Studies to determine the cause of the non-attainment problem began in 1976, and voluntary reductions in winter sanding started in the 1976–77 winter season. The emission inventory will be updated by DEQE annually through their EIS computer program, as discussed in the "Annual Reporting" section of the attainment plan.

(4) The same commenter agreed with EPA's proposal to disapprove the regulation changes affecting solid fossil fuel-fired facilities and asphalt batch plants, since these changes represent potential relaxations of existing SIP emission limitations in non-attainment areas.

New Source Review:

(1) The same commenter agreed with EPA's proposed approval of the attainment plan conditioned upon inclusion of growth projections in the SIP for sources exempted from review under the EOIR. The commenter also agreed with EPA's requiring DEQE to explain how the obligations imposed by adoption of the EOIR would be met. DEQE satisfied both of these conditions during the 30-day public comment period.

(2) The same commenter suggested that DEQE identify an offset ratio to be used in evaluation of permit applications, so that the reasonable further progress requirement of section 172(b)(3) will be met.

EPA proposed to conditionally approve the attainment plan upon adoption of a regulation by DEQE by March 1, 1980 that will ensure that emission offsets are consistent with RFP, as required by section 173(1)(A). EPA does not interpret that section to mean that a specific offset ratio must be established, as long as the ratio is greater than one to one. Depending on the facts in a particular case, offset ratios could vary, as long as the emissions from the new source would not interfere with RFP.

Enforcement Authority:

One commenter believes that DEQE's enforcement authority is limited and inadequate; however, EPA believes that the state's enforcement authority is sufficient to meet the requirements of section 110(a)(2)(F). EPA's Compliance Data System, a computer data bank containing information on the compliance status of air pollution sources, shows that 98% of the major point sources in Massachusetts are in compliance with state emission limitations and regulations.

Attainment Status Redesignations

Boston and Springfield:

One commenter objected to EPA's proposal to redesignate Boston from primary standard non-attainment for TSP to unclassifiable, and Springfield, from primary standard to secondary standard non-attainment. The position taken was that the data should be used in requiring emission reductions to protect the public health.

Existing monitoring stations showing non-attainment were examined in terms of the monitor siting criteria and also in terms of the factors causing the high recorded levels. In physically locating a monitoring station, consideration must be given to practical matters in order to prevent interference from local objects, to protect monitors from vandalism or other damage, and to site the monitor so as to produce a representative sample. To this end, EPA guidance specifies minimum distances from roadways, buildings, trees, chimneys, and other obstructions which would bias sampling results, as well as vertical and horizontal location. See "Guidance for Air Quality Monitoring Network Design and Instrument Siting," QAQPS No. 1.2-012R2, September, 1975, and "Selecting Sites for Monitoring Total Suspended Particulates," EPA-450/3-77-018, December, 1977, as well as 40 CFR Part 58, Ambient Air Quality Surveillance, promulgated in the May 10, 1979 Federal Register (44 FR 27571), which reflects criteria presented in the two previous documents.

The design values for SIP development work and for designation purposes should not be based on data from monitors close to and dominated by a roadway, from rooftop monitors unduly influenced by parapets or chimneys, or other similar situations. In the past, however, good siting procedures were not always followed. The DEQE's evaluation of the monitor locations showed that the roadway influence was significant at monitors at low elevations adjacent to heavily travelled roadways. Among the data reviewed by DEQE were the results of a recently completed one-year special study, including sampling at satellite monitoring stations, sampling with dichotomous (size differentiating) and continuous (every hour) monitors, meteorological and traffic volume data, and chemical and elemental analyses of selected filters.

When air quality data used in designating the attainment status of an area are subsequently found to have been unduly influenced by reentrained road dust, EPA's policy is to revise the area's attainment status to unclassifiable, unless other monitoring data are available which show that a non-attainment designation is appropriate. However, if the monitoring site in question is impacted by a point source, dispersion modeling should

generally be performed to determine whether the source's emissions result in air quality levels above the standards. See also September 11, 1978 **Federal Register** (43 FR 40414) discussing "Attainment Status Designations."

Non-Part D Requirements

State Boards:

The same commenter pointed out that Massachusetts' submittal addressing the requirements of section 128 was not available for public inspection at EPA's Public Information Reference Unit in Washington, D.C., nor is it included in the attainment plan submittal.

EPA will not approve the SIP as satisfying these requirements. Proper notice and availability will be provided at a later date.

EPA Final Action

After evaluation of the comments received during the 30-day comment period, EPA is taking final action to conditionally approve certain elements of Massachusetts' plan. A discussion of conditional approval and its practical effect appears in a supplement to the General Preamble, 44 FR 38583 (July 2, 1979). The conditional approval requires the State to submit additional materials by the deadlines specified in today's notice. EPA will follow the procedures described below when determining if the State has satisfied the conditions.

1. If the State submits the required additional documentation according to schedule, EPA will publish a notice in the **Federal Register** announcing receipt of the material. The notice of receipt will also announce that the conditional approval is continued pending EPA's final action on the submission.

2. EPA will evaluate the State's submission to determine if the condition is fully met. After review is complete, a **Federal Register** notice will be published proposing or taking final action either to find the condition has been met and approve the plan, or to find the condition has not been met, withdraw the conditional approval and disapprove the plan. If the plan is disapproved the Section 110(a)(2)(I) restrictions on construction will be in effect.

3. If the State fails to submit the required materials needed to meet a condition, EPA will publish a **Federal Register** notice shortly after the expiration of the time limit for submission. The notice will announce that the conditional approval is withdrawn, the SIP is disapproved and Section 110(a)(2)(I) restrictions on growth are in effect.

Accordingly, the TSP Primary Standard Attainment Plan for Worcester, submitted on March 30, 1979, and the new source review program for all nonattainment areas, submitted on May 3, 1979, are conditionally approved as satisfying the requirements of Part D and Section 110(a)(2)(I), with the exception of certain NSR requirements relating to carbon monoxide and ozone which will be discussed in a separate notice. The DEQE has provided assurances that it will submit corrections for minor deficiencies by the dates specified below:

(1) by March 31, 1980:

Submittal of a comprehensive plan as part of the overall statewide plan for public participation, in compliance with grant conditions contained in Massachusetts' Fiscal Year 1980 program grant under Section 105 of the Act.

(2) by March 1, 1980:

A regulation governing construction and operation of major new and modified sources will be adopted which specifies that by the time the source is to commence operation, total allowable emissions from (1) existing sources, (2) new or modified sources which are not major emitting facilities, and (3) the proposed source will be sufficiently less than total allowable emissions from existing sources prior to the permit application, so as to represent reasonable further progress; the narrative portion of the SIP will be amended accordingly.

In addition, EPA is amending 40 CFR Part 81 to redesignate the attainment status of Boston, Danvers, and Springfield with respect to the TSP primary standard.

EPA is also granting the DEQE's request for an 18-month extension of the deadline for submittal of TSP secondary standard attainment plans. In conjunction with the extension, EPA is approving, with certain exceptions, statewide regulation changes submitted by the DEQE on March 30, 1979.

The proposed approval of the Massachusetts SIP pursuant to Section 128 is hereby withdrawn, since the material was not made available to the public. Proper notice and availability will be provided at a later date.

The measures above which are approved or conditionally approved are in addition to, and not in lieu of, existing SIP regulations. The present emission control regulations remain applicable and enforceable to prevent a source from operating without controls or under less stringent controls, while moving toward compliance with the new regulations (or, if it chooses, challenging the new regulations). Failure of a source to meet applicable pre-existing regulations will result in appropriate enforcement action, which may include assessment of noncompliance penalties.

There are two main exceptions to this rule. First, if a pre-existing control requirement is incompatible with a new, more stringent requirement, the state may exempt sources from compliance with the pre-existing regulations during the period when compliance with the existing requirement conflicts with achieving compliance with the new requirement. Any exemption granted would be reviewed and acted on by EPA as a SIP revision. Second, an existing requirement can be relaxed or revoked if the revision will not interfere with attainment of standards.

The 1978 edition of 40 CFR Part 52 lists in the subpart for Massachusetts the applicable deadlines for attaining ambient standards (attainment dates) required by Section 110(a)(2)(A) of the Act. For each non-attainment area where a revised plan provides for attainment by the deadlines required by section 172(a) of the Act, the new deadlines are substituted on Massachusetts' attainment date chart in 40 CFR Part 52. The earlier attainment dates under Section 110(a)(2)(A) will be referenced in a footnote to the chart. Sources subject to plan requirements and deadlines established under Section 110(a)(2)(A) prior to the 1977 Amendments remain obligated to comply with those requirements, as well as with the new Section 172 plan requirements.

Congress established new attainment dates under Section 172(a) to provide additional time for previously regulated sources to comply with new, more stringent requirements and to permit previously uncontrolled sources to comply with newly applicable emission limitations. These new deadlines were not intended to give sources that failed to comply with pre-1977 plan requirements by the earlier deadlines more time to comply with those requirements. As stated by Congressman Paul Rogers in discussing the 1977 Amendments:

> Section 110(a)(2) of the Act made clear that each source had to meet its emission limits "as expeditiously as practicable" but not later than three years after the approval of a plan. This provision was not changed by the 1977 Amendments. It would be a perversion of clear congressional intent to construe part D to authorize relaxation or delay of emission limits for particular sources. The added time for attainment of the national ambient air quality standards was provided, if necessary, because of the need to tighten emission limits or bring previously uncontrolled sources under control. Delays or relaxation of emission limits were not generally authorized or intended under part D.

(123 Cong. Rec. H11958, daily ed. November 1, 1977.)

To implement Congress' intention that sources remain subject to pre-existing plan requirements, sources cannot be granted variances extending compliance dates beyond attainment dates established prior to the 1977 Amendments. EPA cannot approve such compliance date extensions even though a Section 172 plan revision with a later attainment date has been approved. However, a compliance date extension beyond a pre-existing attainment date may be granted if it will not contribute to a violation of an ambient standard or a PSD increment.*

In addition, sources subject to pre-existing plan requirements may be relieved from complying with such requirements if a Section 172 plan imposes new, more stringent control requirements that are incompatible with controls required to meet the pre-existing regulations. Decisions on the incompatibility of requirements will be made on a case-by-case basis.

The Agency finds that good cause exists for making this action immediately effective for the following reasons:

(1) Implementation plan revisions are already in effect under state law and EPA approval imposes no additional regulatory burden;

(2) EPA has a responsibility under the Act to take final action on the portion of the SIP which addresses Part D requirements by July 1, 1979, or as soon thereafter as possible.

Under Executive Order 12044 EPA is required to judge whether a regulation is "significant" and therefore subject to the procedural requirements of the Order or whether it may follow other specialized development procedures. EPA labels these other regulations "specialized". I have reviewed this regulation and determined that it is a specialized regulation not subject to the procedural requirements of Executive Order 12044.

This rulemaking action is issued under the authority of Section 110 of the Clean Air Act, as amended.

Dated: December 31, 1979.

Douglas M. Costle,
Administrator.

PART 52—APPROVAL AND PROMULGATION OF IMPLEMENTATION PLANS

Part 52 of Chapter I, Title 40 of the Code of Federal Regulations is amended as follows:

*See General Preamble for Proposed Rulemaking, 44 FR 20373–74 (April 4, 1979).

Subpart W—Massachusetts

1. Section 52.1120, paragraph (c) is amended by adding subparagraphs (25) and (26) as follows:

§ 52.1120 Identification of plan.

* * * * *

(c) * * *

(25) On March 30, 1979 and on April 23, 1979 the Commissioner of the Massachusetts Department of Environmental Quality Engineering submitted the non-attainment area plan for Total Suspended Particulates (TSP) in Worcester, miscellaneous statewide regulation changes, and an extension request for the attainment of TSP secondary standards for areas designated non-attainment as of March 3, 1978.

(26) On May 3, 1979 and on August 7, 1979 the Commissioner of the Massachusetts Department of Environmental Quality Engineering submitted a revision entitled "Massachusetts Implementation Plan, Amended Regulation—All Districts, New Source Review Element," relating to construction and operation of major new or modified sources in non-attainment areas.

2. Section 52.1122 is amended by adding paragraph (c) as follows:

§ 51.1122 Extensions.

* * * * *

(c) The Administrator hereby extends for 18 months (until July 1, 1980) the statutory timetable for submission of Massachusetts' plan for attainment and maintenance of the secondary standard for particulate matter in all the secondary non-attainment areas (See 40 CFR 81.322).

3. Section 52.1123 is revised to read as follows:

§ 52.1123 Approval status.

With the exceptions set forth in this subpart, the Administrator approves the Massachusetts plan as identified in § 52.1120 for attainment and maintenance of the national standards under Section 110 of the Clean Air Act. Furthermore, the Administrator finds the TSP primary standard attainment plan satisfies all requirements of Part D, Title I, of the Clean Air Act as amended in 1977, except as noted below.

4. Section 52.1124 is amended by adding paragraph (c) as follows:

§ 52.1124 Review of new sources and modifications.

* * * * *

(c) Revisions to Regulation 310 CMR 7.02(2)(d) submitted on March 30, 1979 are disapproved because they do not satisfy the requirements of § 51.18(h).

5. Section 52.1127 is revised to read as follows:

§ 52.1127 Attainment dates for national standards.

The following table presents the latest dates by which the national standards are to be attained. The table reflects the new information presented in Massachusetts' plan as approved.

Air quality control region and nonattainment area	TSP		Pollutant SO_2		NO_2	CO	O_3
	Primary	Secondary	Primary	Secondary			
Metropolitan Boston Intrastate			c	g	b	e	e
Danvers	a	g					
Cambridge	a	g					
Framingham	a	g					
Lynn	a	g					
Marblehead	a	g					
Norwood	a	g					
Medford	a	g					
Peabody	a	g					
Quincy	a	g					
Revere	a	g					
Waltham	a	g					
Remainder of AQCR	a	g					
Merrimack Valley-Southern NH Interstate			c	c	b	b	b
Haverhill	a	g					
Lawrence	a	g					
Remainder of AQCR	a	b					
Metropolitan Providence Interstate			c	c	b	b	b
Fall River	a	g					
Remainder of AQCR	a	b					
Central Massachusetts Intrastate			a	c	b	b	b
Worcester	f	g					
Athol	a	g					
Fitchburg	a	g					
Remainder of AQCR	a	b					
Hartford-New Haven-Springfield Interstate			a	c	b	d	b
Springfield	a	g					
Remainder of AQCR	a	b					
Berkshire Intrastate			b	b	b	b	b
Adams	a	g					
North Adams	a	g					
Pittsfield	a	g					
Remainder of AQCR	a	b					

NOTE.—Footnotes which are underlined are prescribed by the Administrator because the plan did not provide a specific date or the date provided was not acceptable.

a. Air quality levels presently below primary standards or area is unclassifiable.
b. Air quality levels presently below secondary standards or area is unclassifiable.
c. May 31, 1975.
d. August 1, 1976.
e. May 31, 1977.
f. January 1, 1979.
g. 18-month extension for plan submittal granted, attainment date not yet proposed.

Sources subject to plan requirements and attainment dates established under Section 110(a)(2)(A) prior to the 1977 Clean Air Act Amendments remain obligated to comply with those requirements by the earlier deadlines. The earlier attainment dates are set out at 40 CFR Part 52.1127 (1978).

6. Section 52.1129 is amended by adding paragraph (b) as follows:

§ 52.1129 Control Strategy: Photochemical oxidants (hydrocarbons) and carbon monoxide

* * * * *

(b) Revisions to the following regulations submitted on March 30, 1979 are neither approved nor disapproved because the impact of these changes has not yet been evaluated:

(1) Regulation 310 CMR 7.02(8) Table 3

(2) Regulation 310 CMR 7.02(12)

7. A new § 52.1131 is added in Subpart W as follows:

§ 52.1131 Control strategy: Particulate matter.

(a) Revisions to the following regulations submitted on March 30, 1979 are disapproved:

(1) Regulation 310 CMR 7.02(8), Table 2, new facilities greater than 250 million Btu/hr input burning solid fuel

(2) Regulation 310 CMR 7.02(9), Table 5

8. A new § 52.1166 is added in Subpart W as follows:

§ 52.1166 Rules and regulations.

(a) *Part D—conditional approval*—The TSP Attainment Plan for the Worcester non-attainment area and the NSR program for all non-attainment areas are approved as satisfying Part D requirements under the following conditions:

(1) Submittal by March 31, 1980 of a comprehensive plan for public participation in compliance with Section 105 grant conditions for FY 1980.

(2) Submittal by March 1, 1980 of a regulation governing construction and operation of major new and modified sources which satisfies the requirements of Section 173(1)(A) of the Clean Air Act (42 U.S.C. 7401 et seq).

PART 81—DESIGNATION OF AREAS FOR AIR QUALITY PLANNING PURPOSES

Part 81 of Chapter I, Title 40 of the Code of Federal Regulations is amended as follows:

Subpart C—Section 107 Attainment Status Designations

§ 81.322 [Amended]

1. In § 81.322, the table entitled "Massachusetts—TSP" is amended by striking the "X"s in the column entitled "Does Not Meet Primary Standards" on the lines for Springfield, Boston, and Danvers.

§ 81.322 [Amended]

2. In § 81.322, the table entitled "Massachusetts—TSP" is amended by adding "X"s on the lines for Springfield and Danvers in the column entitled "Does Not Meet Secondary Standards".

§ 81.322 [Amended]

3. In § 81.322, the table entitled "Massachusetts—TSP" is amended by adding an "X" on the line for Boston in the column entitled "Cannot Be Classified."

§ 81.322 [Amended]

4. In § 81.322, the table entitled "Massachusetts—TSP" is corrected by changing "Framington" to "Framingham" and "Malborough" to "Marlborough."

[FR Doc. 80-841 Filed 1-9-80; 8:45 am]
BILLING CODE 6560-01-M

---

40 CFR Part 81

Designation of Areas for Air Quality Planning Purposes

AGENCY: Environmental Protection Agency (EPA).

ACTION: Final rule.

SUMMARY: Environmental Protection Agency (EPA) today approves the redesignation of the attainment status of certain areas in the State of Oregon as promulgated on March 3, 1978 (43 FR 9028). The Oregon Department of Environmental Quality (DEQ), on March 2, 1979, requested that these redesignations be made.

DATE: January 10, 1980.

ADDRESSES: Copies of the supporting document are available for inspection during normal business hours at the following addresses:

Environmental Protection Agency, Region X (M/S 629), 1200 Sixth Avenue, Seattle, WA 98101

State of Oregon, Department of Environmental Quality, P.O. Box 1760, Portland, OR 97207

Environmental Protection Agency, Public Information Reference Unit, Room 2922, 401 M Street SW., Washington, DC 20460.

FOR FURTHER INFORMATION CONTACT: George C. Hofer, Technical Support and Special Projects Section, Environmental Protection Agency, 1200 Sixth Avenue, Seattle, WA 98101, Telephone No. (206) 442-1125, FTS No. 399-1125.

SUPPLEMENTARY INFORMATION: On March 3, 1978, as required by Section 107 of the Clean Air Act Amendments of 1977, EPA promulgated the attainment status of the State of Oregon in relation to the National Ambient Air Quality Standards (43 FR 9028). In accordance with the Act, the rulemaking provided that the March 3, 1978, designations may, when appropriate, be revised by the State and resubmitted to the Administrator. Based on that provision, the Oregon Department of Environmental Quality (DEQ), on March 2, 1979, has requested that the following redesignations be made.

1. *Medford-Ashland AQMA—TSP.* The DEQ has requested that the Medford-Ashland AQMA be redesignated as non-attainment for primary total suspended particulates (TSP) standards in addition to secondary standards.

The previous designation of non-attainment for the secondary TSP standard was based on information available at the time the designation was made. This information included (1) that the 24-hour primary standard had not been violated during 1975 through the first half of 1977, (2) that the air quality had fluctuated around the annual standard but was not consistently above the standard, and (3) that a drought occurring during 1976, made the data for that period of time unrepresentative.

Data subsequent to 1977, however, has shown that there was persistent primary annual geometric mean attainment problem. Therefore, EPA is redesignating the Medford-Ashland AQMA as non-attainment for primary TSP standards. The Medford-TSP redesignation is being made pursuant to the authority of Section 107(d)(5) of the Act, and accordingly, a SIP revision for this area must satisfy the requirements of Part D of Title I of the Act. As the Medford area is being redesignated for

TSP subsequent to EPA's initial promulgation of such Part D non-attainment areas (43 FR 8962, March 3, 1978), the July 1, 1979 approval deadline imposed by Sections 110(a)(2)(I) and 172 is not applicable. However, the statutory time frame for State submittal and EPA action on a SIP revision remains applicable. Therefore the State will have nine (9) months, as specified in Sections 110 and 406 of the Clean Air Act to prepare the TSP non-attainment SIP revision. Thereafter, EPA will have six (6) months in which to take action on such revision prior to the imposition of the growth limitations required by Sections 110(a)(2)(I) and 172(a) of the Act.

2. *Eugene-Springfield AQMA—Ozone.* The second request by the DEQ is that Eugene-Springfield AQMA be redesignated attainment for the ozone standard in view of EPA's February 9, 1979 (44 FR 8734) relaxation of the standard from 0.08 ppm to 0.12 ppm. An examination of the monitored ozone data shows non-attainment of the 0.08 ppm standard but shows attainment at the new 0.12 ppm standard. However, these data are from a single air monitoring site located close to Eugene and do not represent the maximum expected down wind concentrations which are more likely to occur from 10 to 15 miles from Eugene. Therefore, EPA is redesignating this area as "attainment/unclassifiable" and encouraging furthering monitoring be completed in this area of expected maximum concentrations.

3. *Eugene-Springfield AQMA—TSP.* The third request made by the DEQ is to redesignate the Eugene-Springfield AQMA from non-attainment for primary TSP to non-attainment for secondary TSP standard.

EPA's initial designation of non-attainment of the primary TSP was based on data available at that time within the Eugene-Springfield AQMA. On June 28, 1979 DEQ provided additional monitoring data and identified an undue influence from sources proximate to the City Shops monitoring site. The data also showed that no monitor, except the City Shops site, would have violated the annual primary TSP standard during the years 1974 through 1978. Because of the undue influence at the City Shops monitor, EPA is redesignating the Eugene-Springfield AQMA as non-attainment for secondary TSP standard. In conjuction with this action, EPA encourages the DEQ to maintain the City Shop monitoring site to assess the adequacy of the localized TSP control efforts in the microscale problem area around the City Shop site.

(Secs. 107(d), 171(2), 301(a), of the Clean Air Act, as amended (42 U.S.C. 7407(d), 7501(2), 7601(a)))

Dated: December 31, 1979.

Douglas Costle,

Administrator.

PART 81—DESIGNATION OF AREAS FOR AIR QUALITY CONTROL PURPOSES

Part 81 of Chapter I, Title 40, Code of Federal Regulations should be amended as follows:

Subpart C—Section 107 Attainment Status Designations.

* * * * *

In § 81.338, the attainment status designation table for TSP and O_3 are revised to read as follows:

§ 81.388 Oregon.

Oregon TSP

Designated area	Does not meet primary standards	Does not meet secondary standards	Cannot be classified	Better than national standards
Portland-Vancouver AQMA (Oregon portion)		×		
Eugene-Springfield AQMA		×		
Medford-Ashland AQMA	×			
Remainder of State				×

Oregon—Ozone

Designated area	Does not meet Primary standards	Cannot be classified or better than national standards
Portland-Vancouver AQMA (Oregon portion)	×	
Medford-Ashland AQMA	×	
Salem	×	
Eugene-Springfield AQMA		×
Remainder of State		×

[FR Doc. 80-766 Filed 1-9-80; 8:45 am]

BILLING CODE 6560-01-M

DEPARTMENT OF TRANSPORTATION

Coast Guard

46 CFR Parts 4 and 5

[CGD 79-080]

Marine Investigation Regulations; Suspension and Revocation Proceedings; Witness Fees and Allowances

AGENCY: Coast Guard, DOT.

ACTION: Final rule.

SUMMARY: These rules revise the fees and allowances payable to witnesses appearing before certain investigations and administrative proceedings. Witness fees are paid at the same rate as in U. S. District Courts. The statute setting the fees and allowances for U. S. Courts has been amended. These rules will update these regulations to conform to the new rates, consolidate witness fee procedures in one subpart and delete unnecessary sections.

EFFECTIVE DATE: These rules are effective on 11 Feb. 1980

FOR FURTHER INFORMATION CONTACT: Lieutenant Commander Douglas M. Miller, Chief, Merchant Marine Personnel Action Branch (G-MMI-2/TP24), 2100 Second St., S. W., Washington, D.C. 20593, (202) 426-2215.

SUPPLEMENTARY INFORMATION: Since these rules concern agency practice only, the requirements of notice and public comment do not apply and they may be made effective in less than 30 days after publication in the **Federal Register** (5 U.S.C. 553).

DRAFTING INFORMATION: The principal persons involved in drafting this rule are Lieutenant Commander D. M. Miller, Project Manager, Chief, Merchant Marine Personnel Action Branch, and Lt. G. J. Jordan, Project Counsel, Office of the Chief Counsel.

DISCUSSION OF REGULATIONS: The Coast Guard is authorized by 46 U.S.C. 239 (§ 4450 of the Revised Statutes), to undertake investigations of marine casualties and violations of certain statutes and the regulations promulgated thereunder, and to conduct administrative proceedings concerning the revocation and suspension of licenses and documents of merchant marine personnel. The statute authorizes the Coast Guard to pay witness fees and allowances to witnesses summoned before proceedings, at a rate not to exceed that of U. S. District Courts. Fees and allowances in U. S. Courts are set out in 28 U.S.C. 1821. Pub. L. 95-535 raised the attendance fees and changed the method of determining travel and subsistence allowances.

The revision consolidates the witness fee regulations in one subpart (46 CFR 5.17) and replaces the duplicate regulations in 46 CFR 4.11-10 with a reference to § 5.17-1.

The schedule of fees and allowances is deleted and replaced by section 5.17-1(a) that sets the rates as those in 28 U.S.C. 1821. This section also requires witnesses to provide receipts, when required by 28 U.S.C. 1821.

Since Pub. L. 95-535 expanded 28 U.S.C. 1821 to include courts in Alaska, the section establishing special rates for

Alaska is deleted. The section concerning fees and allowances for government employees and military personnel is also deleted because procedures for these persons are contained in agency manuals.

In consideration of the foregoing, Parts 4 and 5 of Title 46, Code of Federal Regulations are amended as follows:

1. Section 4.11-10 is revised to read as follows:

§ 4.11-10 Witness fees and allowances.

Witness fees and allowances are paid in accordance with 46 CFR 5.17-1.

2. Section 5.17-1 is revised to read as follows:

§ 5.17-1 Payment of witness fees and allowances.

(a) Duly subpenaed witnesses, other than government employees, in attendance at any investigation or other proceeding are paid the fees and allowances provided by 28 U.S.C. 1821.

(b) Witnesses may apply for payment for their attendance as witnesses by submitting a request for payment (Standard Form 1157) with any necessary receipts.

(c) The presiding official or the Investigating Officer forwards the request to the authorized Coast Guard certifying officer, with a statement that—

(1) the witness was duly subpenaed by the Coast Guard;

(2) the witness appeared pursuant to the subpena; and

(3) the witness is entitled to the witness fees and subsistence and travel allowances provided by law.

(d) The Coast Guard authorized certifying officer—

(1) certifies to the propriety of the claim; and

(2) submits it to the appropriate disbursing officer for payment.

(e) A witness called to testify as an expert may be paid a higher fee, if the higher fee is approved by the Commandant prior to the witness' appearance.

(f) In the case of employed merchant marine personnel their place of residence is the vessel upon which they are employed, and in the case of unemployed merchant marine personnel their place of residence is considered to be the actual place of residence ashore at the time of the investigation or hearing rather than the residence of their next of kin.

§ 5.17-5 [Revoked].

3. By revoking section 5.17-5.

(46 U.S.C. 239(f); 49 CFR 1.46(b))

Dated: January 3, 1980.

R. H. Scarborough,

Vice Admiral, U. S. Coast Guard, Acting Commandant.

[FR Doc. 80-855 Filed 1-9-80; 8:45 am]

BILLING CODE 4910-14-M

DEPARTMENT OF THE INTERIOR

Fish and Wildlife Service

50 CFR Part 33

Sport Fishing; National Wildlife Refuges in Kansas, Missouri, Iowa, and Portions of Nebraska

AGENCY: Fish and Wildlife Service, Interior.

ACTION: Special regulations.

SUMMARY: The Director has determined that the opening to sport fishing of certain National Wildlife Refuges in Iowa, Missouri, Kansas and portions of Nebraska is compatible with the objectives for which the areas were established, will utilize a renewable natural resource, and will provide additional recreational opportunity to the public. These special regulations describe the conditions under which sport fishing will be permitted on these areas during the 1980 fishing season.

DATES: Period Covered—January 1, 1980 to December 31, 1980. See State regulations for specific fishing seasons.

FOR FURTHER INFORMATION CONTACT: Tom A. Saunders, Area Manager ((816) 374-6166) or appropriate refuge manager at the address or telephone number listed below:

Area Manager, U.S. Fish and Wildlife Service, 2701 Rockcreek Parkway, Suite 106, North Kansas City, Missouri 64116. Telephone (816) 374-6166.

Refuge Manager, DeSoto National Wildlife Refuge, R.R. #1, Box 114, Missouri Valley, Iowa 51555. Telephone (712) 642-4121.

Refuge Manager, Union Slough National Wildlife Refuge, Route 1, Box 32B, Titonka, Iowa 50480. Telephone (515) 928-2523.

Refuge Manager, Flint Hills National Wildlife Refuge, P.O. Box 128, Hartford, Kansas 66854. Telephone (316) 392-5553.

Refuge Manager, Kirwin National Wildlife Refuge, Kirwin, Kansas 67644. Telephone (913) 646-2373.

Refuge Manager, Mingo National Wildlife Refuge, R.R. #1, Box 9A, Puxico, Missouri 63960. Telephone (314) 222-3589.

Refuge Manager, Quivira National Wildlife Refuge, P.O. Box "G", Stafford, Kansas 67578. Telephone (316) 486-2393.

Refuge Manager, Squaw Creek National Wildlife Refuge, P.O. Box 101, Mound City, Missouri 64470. Telephone (816) 442-3570.

Refuge Manager, Swan Lake National Wildlife Refuge, P.O. Box 68, Sumner, Missouri 64681. Telephone (816) 856-3323.

SUPPLEMENTARY INFORMATION: Donald G. Young is the primary author of these special regulations.

General Conditions

1. Fishing is permitted on national wildlife refuges indicated below in accordance with 50 CFR Part 33, all applicable State regulations, the general conditions, and the following special regulations:

The Refuge Recreation Act of 1962 (16 U.S.C. 460K) authorizes the Secretary of the Interior to administer such areas for public recreation as an appropriate incidental or secondary use only to the extent that it is practicable and not inconsistent with the primary objectives for which the area was established. In addition, the Refuge Recreation Act requires: (a) That any recreational use permitted will not interfere with the primary purpose for which the area was established; and (b) that funds are available for the development, operation, and maintenance of the permitted forms of recreation.

The recreational use authorized by these regulations will not interfere with the primary purposes for which these refuges were established. The determination is based upon consideration of, among other things, the Service's Final Environmental Statement in the Operation of the National Wildlife Refuge System published in November, 1976. Funds are available for the administration of the recreational activities permitted by these regulations.

2. A list of conditions applying to the individual refuge and a map of the sport fishing area(s) are available at refuge headquarters. Portions of refuges which are closed to fishing are designated by signs and/or delineated on maps.

3. Access points on certain refuges are limited to designated roads or other specific areas. Vehicle use on all refuge areas is restricted to designated roads and lanes.

4. Sport fishing on portions of the following refuges shall be in accordance with all applicable State and Federal regulations and conditions as indicated.

§33.5 Special regulations; sport fishing for individual wildlife refuge area.

Kansas

Kirwin National Wildlife Refuge

(1) Sport fishing permitted year round on all areas not designated by signs as closed to fishing.

(2) Sport fishing shall be in accordance with all applicable state regulations.

Flint Hills National Wildlife Refuge

(1) Beginnng one day before the opening of the 1980-81 Regular Waterfowl Season, as determined by State and Federal Law, through the

close of this season, portions of the refuge are closed to fishing. Consult refuge manager for details.

(2) Immediately following the close of the 1980–81 Waterfowl Season, as determined by State and Federal Law, all waters within the Flint Hills Refuge are open to sport fishing and the taking of bull frogs.

(3) All man-made water impoundments within the refuge, except John Redmond Reservoir, may be fished with pole and line and bow and arrow, only. The 15-inch minimum length of black bass, as defined by Kansas Law applies to all refuge Man-made impoundments.

Quivira National Wildlife Refuge

(1) Sport fishing is permitted from May 1, 1980 through September 30, 1980, only on the areas designated by signs as being open to fishing.

(2) Fishing will be with closely attended rod(s) and line(s), only.

(3) The use of boats is not permitted. One-person floater tubes may be used.

(4) Overnight camping is not permitted.

Iowa

DeSoto National Wildlife Refuge

(1) Area open to ice fishing during daylight hours only January 1, 1980 through February 28, 1980, provided that ice conditions are safe enough to permit this activity.

(2) A 15-inch minimum length limit will be in effect for largemouth bass (*Micropterus salmoides*). All largemouth bass less than 15 inches total length are to be returned to the water immediately.

(3) Fishing with more than two lines and with more than two hooks on each line is not permitted.

(4) Motor or wind driven conveyances are not permitted in the lake from January 1, 1980 through February 28, 1980.

(5) The use of portable ice fishing shelters will be permitted on a daily basis, January 1, 1980 through February 28, 1980.

(6) Sport fishing by pole and line, only, is permitted from April 15, 1980 through September 30, 1980 in accordance with applicable State regulations and posted special regulations.

Union Slough National Wildlife Refuge

(1) The use of boats, canoes, or other floating devices is prohibited.

(2) Sport fishing permitted from June 1, 1980 through September 30, 1980.

Missouri

Mingo National Wildlife Refuge

(1) Visitors are permitted on the refuge from one hour before sunrise until one hour after sunset.

(2) All waters west of ditch #6 are open year-round. All other waters are open March 15th through September 30, 1980.

(3) Fishing in Fox Pond and May Place Pond shall be by pole(s) and line(s) only, and in accordance with posted regulations.

(4) Only boats without motors may be used. No boats may be left overnight. An approved personal flotation device is required for each person in a boat.

(5) Fires are permitted only in fireplaces provided at picnic areas.

(6) Non-game fish may be taken for personal use, but not for commercial purposes by snagging, grabbing, snaring, nets and seines from March 15th through September 30, 1980.

(7) All nets must be plainly labeled with the name and address of the person using such equipment.

(8) Trammel nets and gill nets must be attended at all times. All other nets may be left set and unattended for not more than 24 hours.

(9) Game fish may not be possessed while using nets or seines.

Squaw Creek National Wildlife Refuge

(1) Sport fishing is permitted in accordance with State and Federal regulations from March 15th through December 31, 1980.

Swan Lake National Wildlife Refuge

(1) Sport fishing is permitted from March 1st through September 30, 1980.

(2) During daylight hours, only.

(3) Boats without motors may be used on Swan Lake, Silver Lake, and that portion of South Lake immediately adjacent to No. 5 Levee.

(4) Travel is permitted on all roads except those posted with "Road Closed" signs.

Nebraska

DeSoto National Wildlife Refuge

See special conditions listed under IOWA.

Note.—The Department of the Interior has determined that this document is not a significant rule and does not require regulatory analysis under Executive Order 12044 and 43 CFR Part 14.

The provisions of these special regulations supplement the regulations which generally govern fishing on wildlife refuge areas and which are set forth in Title 50, Code of Federal Regulations, Part 33. The public is invited to offer suggestions and comments at any time.

Dated: January 3, 1980.

Tom A. Saunders,

Area Manager.

[FR Doc. 80-779 Filed 1-9-80; 8:45 am]

BILLING CODE 4310-55-M

Proposed Rules

Federal Register
Vol. 45, No. 7
Thursday, January 10, 1980

This section of the FEDERAL REGISTER contains notices to the public of the proposed issuance of rules and regulations. The purpose of these notices is to give interested persons an opportunity to participate in the rule making prior to the adoption of the final rules.

DEPARTMENT OF TRANSPORTATION

Federal Aviation Administration

14 CFR Part 71

[Airspace Docket No. 79-SO-88]

Designation of Federal Airways, Area Low Routes, Controlled Airspace, and Reporting Points; Proposed Alteration of Transition Area, Barnwell, S.C.

AGENCY: Federal Aviation Administration (FAA), DOT.

ACTION: Notice of proposed rulemaking.

SUMMARY: This proposed rule will add an extension to the Barnwell, South Carolina, Transition Area. A new public use instrument approach procedure has been developed for Barnwell County Airport. This action will provide controlled airspace required to protect aircraft executing the new instrument approach procedure.

DATES: Comments must be received on or before: February 13, 1980.

ADDRESS: Send comments on the proposal to: Federal Aviation Administration, Chief, Air Traffic Division, P.O. Box 20636, Atlanta, Georgia 30320.

FOR FURTHER INFORMATION CONTACT: Carl F. Stokoe, Airspace and Procedures Branch, Federal Aviation Administration, P.O. Box 20636, Atlanta, Georgia 30320; telephone: 404-763-7646.

SUPPLEMENTARY INFORMATION:

Comments Invited

Interested persons may participate in the proposed rulemaking by submitting such written data, views or arguments as they may desire. Communications should identify the airspace docket number and be submitted in triplicate to the Director, Southern Region, Federal Aviation Administration, Attention: Chief, Air Traffic Division, P.O. Box 20636, Atlanta, Georgia 30320. All communications received on or before February 13, 1980, will be considered before action is taken on the proposed amendment. The proposal contained in this notice may be changed in the light of comments received. All comments submitted will be available, both before and after the closing date for comments, in the Rules Docket for examination by interested persons. A report summarizing each public contact with FAA personnel concerned with this rulemaking will be filed in the public, regulatory docket.

Availability of NPRM

Any person may obtain a copy of this notice of proposed rulemaking (NPRM) by submitting a request to the Federal Aviation Administration, Office of Public Affairs, Attention: Public Information Center, APA-430, 800 Independence Avenue, S.W., Washington, D.C. 20591, or by calling (202) 426-8058. Communications must identify the notice number of this NPRM. Persons interested in being placed on a mailing list for future NPRMs should also request a copy of Advisory Circular No. 11-2 which describes the application procedures.

The Proposal

The FAA is considering an amendment to Subpart G of Part 71 of the Federal Aviation Regulations (14 CFR 71) to alter the Barnwell, South Carolina, Transition Area. A new instrument approach (NDB RWY 4) has been developed for Barnwell County Airport. This proposed change is necessary to provide the required controlled airspace to protect aircraft executing the approach procedure.

The Proposed Amendment

Accordingly, the Federal Aviation Administration proposes to amend Subpart G, § 71.181 (44 FR 442), of Part 71 of the Federal Aviation Regulations (14 CFR 71) by adding the following:

§ 71.181 [Amended].

Barnwell, S.C.

. . . within 3 miles each side of the 240° bearing from Barnwell RBN extending from the 6.5-mile radius area to 8.5 miles southwest of the RBN.

(Sec. 307(a) of the Federal Aviation Act of 1958, as amended (49 U.S.C. 1348(a)) and Sec. 6(c) of the Department of Transportation Act (49 U.S.C. 1655(c)))

Note.—The Federal Aviation Administration has determined that this document involves a proposed regulation which is not significant under Executive Order 12044, as implemented by DOT Regulatory Policies and Procedures (44 FR 11034, February 26, 1979). Since this regulatory action involves an established body of technical requirements for which frequent and routine amendments are necessary to keep them operationally current and promote safe flight operations, the anticipated impact is so minimal that this action does not warrant preparation of a regulatory evaluation.

Issued in East Point, Georgia, on December 20, 1979.

Louis J. Cardinali,
Director, Southern Region.

[FR Doc. 80-459 Filed 1-9-80; 8:45 am]

BILLING CODE 4910-13-M

14 CFR Part 71

[Airspace Docket No. 79-SO-86]

Designation of Federal Airways, Area, Low Routes; Controlled Airspace, and Reporting Points; Proposed Alteration of Control Zone, Myrtle Beach Air Force Base, Myrtle Beach, S.C.

AGENCY: Federal Aviation Administration (FAA), DOT.

ACTION: Notice of proposed rulemaking.

SUMMARY: This notice proposes to alter the Myrtle Beach Air Force Base, South Carolina, Control Zone by designating additional controlled airspace and revoking an unnecessary portion. New instrument approach procedures have been developed for Myrtle Beach Air Force Base. These changes are necessary to provide required airspace protection for instrument flight operations.

DATES: Comments must be received on or before: February 11, 1980.

ADDRESS: Send comments on the proposal to: Federal Aviation Administration, Chief, Air Traffic Division, P.O. Box 20636, Atlanta, Georgia 30320.

FOR FURTHER INFORMATION CONTACT: Carl F. Stokoe, Airspace and Procedures Branch, Federal Aviation Administration, P.O. Box 20636, Atlanta, Georgia 30320; telephone: 404-763-7646.

SUPPLEMENTARY INFORMATION:

Comments Invited

Interested persons may participate in the proposed rulemaking by submitting such written data, views or arguments as they may desire. Communications should identify the airspace docket number and be submitted in triplicate to the Director, Southern Region, Federal Aviation Administration, Attention: Chief, Air Traffic Division, P.O. Box

20636, Atlanta, Georgia 30320. All communications received on or before February 11, 1980, will be considered before action is taken on the proposed amendment. The proposal contained in this notice may be changed in the light of comments received. All comments submitted will be available, both before and after the closing date for comments, in the Rules Docket for examination by interested persons. A report summarizing each public contact with FAA personnel concerned with this rulemaking will be filed in the public, regulatory docket.

Availability of NPRM

Any person may obtain a copy of this notice of proposed rulemaking (NPRM) by submitting a request to the Federal Aviation Administration, Office of Public Affairs, Attention: Public Information Center, APA-430, 800 Independence Avenue, S.W., Washington, D.C. 20591, or by calling (202) 436-8058. Communications must identify the notice number of this NPRM. Persons interested in being placed on a mailing list for future NPRMs should also request a copy of Advisory Circular No. 11-2 which describes the application procedures.

The Proposal

The FAA is considering an amendment to Subpart F of Part 71 of the Federal Aviation Regulations (14 CFR 71) to designate a control zone extension which is required to protect aircraft executing the new ILS 1, ILS 2, and TACAN Runway 35 instrument procedures. Reduction of the existing control zone extension is necessary because the HI ILS and HI TACAN Runway 17 instrument procedures have been realigned. These changes are necessary to provide required airspace protection for instrument flight operations.

The Proposed Amendment

Accordingly, the Federal Aviation Administration proposes to amend Subpart F, § 71.171 (44 FR 353), of Part 17 of the Federal Aviation Regulations (14 CFR 71) as follows:

§ 71.171 [Amended].

Myrtle Beach Air Force Base, S.C.

". . . within one mile each side of the Myrtle Beach TACAN 348° radial, extending from the 5-mile radius zone to 6.5 miles north of the TACAN . . ." is deleted and ". . . within 1.5 miles each side of the Myrtle Beach TACAN 165° radial, extending from the 5-mile radius zone to 6.5 miles south of the TACAN . . ." is substituted therefor.

(Sec. 307(a) of the Federal Aviation Act of 1958, as amended (49 U.S.C. 1348(a)) and Sec. 6(c) of the Department of Transportation Act (49 U.S.C. 1655(c)))

Note.—The Federal Aviation Administration has determined that this document involves a proposed regulation which is not significant under Executive Order 12044, as implemented by DOT Regulatory Policies and Procedures (44 FR 11034, February 26, 1979). Since this regulatory action involves an established body of technical requirements for which frequent and routine amendments are necessary to keep them operationally current and promote safe flight operations, the anticipated impact is so minimal that this action does not warrant preparation of a regulatory evaluation.

Issued In East Point, Georgia, on December 20, 1979.

Louis J. Cardinali,

Director, Southern Region.

[FR Doc. 80-460 Filed 1-9-80; 8:45 am]

BILLING CODE 4910-13-M

---

14 CFR Part 71

[Airspace Docket No. 79-ASW-59]

Proposed Alteration of Transition Area: Bogalusa, La.

AGENCY: Federal Aviation Administration (FAA), DOT.

ACTION: Notice of proposed rule making.

SUMMARY: The nature of the action being taken is to propose alteration of the transition area at Bogalusa, La. The intended effect of the proposed action is to provide additional controlled airspace for aircraft executing a new instrument approach procedure to the George R. Carr Memorial Airport. The circumstance which created the need for the action is the proposed establishment of a nondirectional radio beacon (NDB) located on the airport.

DATES: Comments must be received on or before February 11, 1980.

ADDRESSES: Send comments on the proposal to: Chief, Airspace and Procedures Branch, Air Traffic Division, Southwest Region, Federal Aviation Administration, P.O. Box 1689, Fort Worth, Texas 76101.

The official docket may be examined at the following location: Office of the Regional Counsel, Southwest Region, Federal Aviation Administration, 4400 Blue Mound Road, Fort Worth, Texas.

An informal docket may be examined at the Office of the Chief, Airspace and Procedures Branch, Air Traffic Division.

FOR FURTHER INFORMATION CONTACT: Kenneth L. Stephenson, Airspace and Procedures Branch, ASW-535, Air Traffic Division, Southwest Region, Federal Aviation Administration, P.O. Box 1689, Fort Worth, Texas 76101; telephone: (817) 624-4911, extension 302.

SUPPLEMENTARY INFORMATION: Subpart G 71.181 (44 FR 442) of FAR Part 71 contains the description of transition areas designated to provide controlled airspace for the benefit of aircraft conducting Instrument Flight Rules (IFR) activity. Alteration of the transition area at Bogalusa, La., will necessitate an amendment to this subpart.

Comments Invited

Interested persons may submit such written data, views, or arguments as they may desire. Communications should be submitted in triplicate to Chief, Airspace and Procedures Branch, Air Traffic Division, Southwest Region, Federal Aviation Administration, P.O. Box 1689, Fort Worth, Texas 76101. All communications received within 30 days after publication of this notice in the Federal Register will be considered before action is taken on the proposed amendment. No public hearing is contemplated at this time, but arrangements for informal conferences with Federal Aviation Administration officials may be made by contacting the Chief, Airspace and Procedures Branch. Any data, views, or arguments presented during such conferences must also be submitted in writing in accordance with this notice in order to become part of the record for consideration. The proposal contained in this notice may be changed in the light of comments received. All comments submitted will be available, both before and after the closing date for comments, in the Rules Docket for examination by interested persons.

Availability of NPRM

Any person may obtain a copy of this notice of proposed rule making (NPRM) by submitting a request to the Chief, Airspace and Procedures Branch, Air Traffic Division, Southwest Region, Federal Aviation Administration, P.O. Box 1689, Fort Worth, Texas 76101, or by calling (817) 624-4911, extension 302. Communications must identify the notice number of this NPRM. Persons interested in being placed on a mailing list for future NPRMs should contact the office listed above.

The Proposal

The FAA is considering an amendment to Subpart G of Part 71 of the Federal Aviation Regulations (14 CFR Part 71) to alter the transition area at Bogalusa, La. The FAA believes this action will enhance IFR operations at the George R. Carr Memorial Airport by

providing controlled airspace for aircraft executing proposed instrument approach procedures using the proposed NDB located on the airport. Subpart G of Part 71 was republished in the **Federal Register** on January 2, 1979 (44 FR 442).

The Proposed Amendment

Accordingly, pursuant to the authority delegated to me, the FAA proposes to amend 71.181 of Part 71 of the Federal Aviation Regulations (14 CFR Part 71) as republished (44 FR 442) by altering the Bogalusa, La., transition area as follows:

§ 71.181 [Amended].

Bogalusa, La.

That airspace extending upward from 700 feet above the surface within a 6.5-mile radius of the George R. Carr Memorial Airport (latitude 30°48′42″N., longitude 89°51′54″W.).

(Sec. 307(a), Federal Aviation Act of 1958 (49 U.S.C. 1348(a)); and Sec. 6(c), Department of Transportation Act (49 U.S.C. 1655(c)))

The FAA has determined that this document involves a proposed regulation which is not significant under Executive Order 12044, as implemented by DOT Regulatory Policies and Procedures (44 FR 11034; February 26, 1979). Since this regulatory action involves an established body of technical requirements for which frequent and routine amendments are necessary to keep them operationally current and promote safe flight operations, the anticipated impact is so minimal that this action does not warrant preparation of a regulatory evaluation and a comment period of less than 45 days is appropriate.

Issued in Fort Worth, Texas on December 20, 1979.

F. E. Whitfield,

Acting Director, Southwest Region.

[FR Doc. 80-456 Filed 1-9-80; 8:45 am]

BILLING CODE 4910-13-M

---

14 CFR Part 71

[Airspace Docket No. 79-ASW-58]

Proposed Designation of Transition Area: Katy, Tex.

AGENCY: Federal Aviation Administration (FAA), DOT.

ACTION: Notice of proposed rule making.

SUMMARY: The nature of the action being taken is to propose designation of a transition area at Katy, Tex. The intended effect of the proposed action is to provide controlled airspace for aircraft executing a new special instrument approach procedure to the Woods No. 2 Airport using the Eagle Lake VORTAC. Coincident with this action the airport is changed from Visual Flight Rules (VFR) to Instrument Flight Rules (IFR).

DATES: Comments must be received on or before February 11, 1980.

ADDRESSES: Send comments on the proposal to: Chief, Airspace and Procedures Branch, Air Traffic Division, Southwest Region, Federal Aviation Administration, P.O. Box 1689, Fort Worth, Texas 76101.

The official docket may be examined at the following location: Office of the Regional Counsel, Southwest Region, Federal Aviation Administration, 4400 Blue Mound Road, Fort Worth, Texas.

An informal docket may be examined at the Office of the Chief, Airspace and Procedures Branch, Air Traffic Division.

FOR FURTHER INFORMATION CONTACT: Kenneth L. Stephenson, Airspace and Procedures Branch, ASW-535, Air Traffic Division, Southwest Region, Federal Aviation Administration, P.O. Box 1689, Fort Worth, Texas 76101; telephone: (817) 624-4911, extension 302.

SUPPLEMENTARY INFORMATION: Subpart G 71.181 (44 FR 442) of FAR Part 71 contains the description of transition areas designated to provide controlled airspace for the benefit of aircraft conducting IFR activity. Designation of a transition area at Katy, Tex., will necessitate an amendment to this subpart.

Comments invited

Interested persons may submit such written data, views, or arguments as they may desire. Communications should be sumitted in triplicate to Chief, Airspace and Procedures Branch, Air Traffic Division, Southwest Region, Federal Aviation Administration, P.O. Box 1689, Fort Worth, Texas 76101. All communications received within 30 days after publication of this notice in the **Federal Register** will be considered before action is taken on the proposed amendment. No public hearing is contemplated at this time, but arrangements for informal conferences with Federal Aviation Administration officials may be made by contacting the Chief, Airpace and Procedures Branch. Any data, views, or arguments presented during such conferences must also be submitted in writing in accordance with this notice in order to become part of the record for consideration. The proposal contained in this notice may be changed in the light of comments received. All comments submitted will be available, both before and after the closing date for comments, in the Rules Docket for examination by interested persons.

Availability of NPRM

Any person may obtain a copy of this notice of proposed rule making (NPRM) by submitting a request to the Chief, Airpace and Procedures Branch, Air Traffic Division, Southwest Region, Federal Aviation Administration, P.O. Box 1689, Fort Worth Texas 76101, or by calling (817) 624-4911, extension 302. Communications must identify the notice number of this NPRM. Persons interested in being placed on a mailing list for future NPRMs should contact the office listed above.

The Proposal

The FAA is considering an amendment to Subpart G of Part 71 of the Federal Aviation Regulations (14 CFR Part 71) to designate a transition area at Katy, Tex. The FAA believes this action will enhance IFR operations at the Woods No. 2 Airport by providing controlled airspace for aircraft executing proposed special instrument approach procedure using the Eagle Lake VORTAC. Subpart G of Part 71 was republished in the **Federal Register** on January 2, 1979 (44 FR 442).

The Proposed Amendment

Accordingly, pursuant to the authority delegated to me, the FAA proposes to amend 71.181 of Part 71 of the Federal Aviation Regulations (14 CFR Part 71) as republished (44 FR 442) by adding the Katy, Tex., transition area as follows:

§ 71.181 [Amended].

Katy, Tex.

That airspace extending upward from 700 feet above the surface within a 6.5-mile radius of the Woods No. 2 Airport (latitude 29°47′36″ N., longitude 95°55′30″ W.)

(Sec. 307(a), Federal Aviation Act of 1958 (49 U.S.C. 1348(a); and Sec. 6(c), Department of Transportation Act (49 U.S.C. 1655(c)))

The FAA has determined that this document involves a proposed regulation which is not significant under Executive Order 12044, as implemented by DOT Regulatory Policies and Procedures (44 FR 11034; February 26, 1979). Since this regulatory action involves an established body of technical requirements for which frequent and routine amendments are necessary to keep them operationally current and promote safe flight operations, the anticipated impact is so minimal that this action does not warrant preparation of a regulatory evaluation and a comment period of less than 45 days is appropriate.

Issued in Fort Worth, Texas, on December 26, 1979.

F. E. Whitfield,

Acting Director, Southwest Region.

[FR Doc. 80-455 Filed 1-9-80; 8:45 am]

BILLING CODE 4910-13-M

---

14 CFR Part 71

[Airspace Docket No. 79-NW-10]

Proposed Alteration of Transition Area

AGENCY: Federal Aviation Administration (FAA), DOT.

ACTION: Notice of proposed rule making.

SUMMARY: This notice proposes to alter the Klamath Falls, Oregon, transition area. On Monday, November 26, 1979, a withdrawal of Notice of Proposed Rulemaking was published in the Federal Register (44 FR 67436) covering the establishment of airspace at Klamath Falls, Oregon. The proposal was to lower airspace to provide for minimum holding at a fix and to lower minimum vector altitudes (MVA) for more efficient air traffic handling. Study subsequent to the issuance of the NPRM disclosed that lowering of MVA in all the airspace encompassed in the proposal would not be necessary. Therefore, the notice was withdrawn. However, designated airspace is still required to provide minimum holding at a fix. A terminal holding pattern is being established at the Klamath Falls VORTAC 313° radial 13 NM DME fix. Utilization of holding at this fix is dependent on designation of additional controlled airspace.

DATES: Comments must be received on or before February 14, 1980.

ADDRESS: Send comments on the proposal to: Chief, Operations, Procedures and Airspace Branch, Federal Aviation Administration, Northwest Region, FAA Building, Boeing Field, Seattle, Washington 98108.

The official docket may be examined at the following location: Office of the Regional Counsel, Federal Aviation Administration, Northwest Region, FAA Building, Boeing Field, Seattle, Washington 98108.

FOR FURTHER INFORMATION CONTACT: Robert L. Brown, Airspace Specialist, Operations, Procedures and Airspace Branch, (ANW-534), Air Traffic Division, Federal Aviation Administration, Northwest Region, FAA Building, Boeing Field, Seattle, Washington 98108; telephone (206) 767-2610.

SUPPLEMENTARY INFORMATION:

Comment Invited

Interested persons may participate in the proposed rule making by submitting such written data, views, or arguments as they may desire. Communications should identify the airspace docket number and be submitted to the Chief, Operations, Procedures and Airspace Branch, Federal Aviation Administration, Northwest Region, FAA Building, Boeing Field, Seattle, Washington 98108. All communications received on or before February 14, 1980, will be considered before action is taken on the proposed amendment. The proposal contained in this notice may be changed in light of the comments received. All comments received will be available, before and after the closing dates for comments, in the official docket for examination by interested persons.

Availability of NPRM

Any person may obtain a copy of this Notice of Proposed Rule Making by submitting a request to the Federal Aviation Administration, Chief, Operations, Procedures and Airspace Branch, ANW-530, Northwest Region, FAA Building, Boeing Field, Seattle, Washington 98108 or by calling (206) 767-2610. Communications must identify the notice number of this NPRM. Persons interested in being placed on a mailing list for future NPRMs should also request a copy of Advisory Circular No. 11-2 which describes the application procedure.

The Proposal

The Federal Aviation Administration is considering an amendment to Subpart G or Part 71 of the Federal Aviation Regulations (14 CFR Part 71) to alter the Klamath Falls, Oregon, transition area.

The proposal is necessary to provide controlled airspace to contain a holding pattern which will provide an orderly sequence of arriving aircraft when Runway 14 is in use at Kingsley Field. Accordingly, the FAA proposes to amend Subpart G of Part 71 of the Federal Aviation Regulations (14 CFR Part 71) as follows:

§ 71.181 Klamath Falls, Oregon

Is amended as follows:

On line 8, insert after "to the 295° radials;":

that airspace extending upward from 7,700 feet MSL within the area bounded by the arcs of 25- and 32-mile radius circles centered on the Klamath Falls VORTAC, extending clockwise from the VORTAC 332° radial to a line 9 miles northeast of and parallel to the VORTAC 332° radial;

Drafting Information

The principal authors of this document are Robert L. Brown, Air Traffic Division, and Hays V. Hettinger, Regional Counsel, Northwest Region, Federal Aviation Administration.

The amendment is proposed under authority of Section 307(a) of the Federal Aviation Act of 1958, as amended, (49 U.S.C. 1348(a)), and of Section 6(c) of the Department of Transportation Act, (49 U.S.C. 1655(c)).

Note.—The FAA has determined that this document involves a proposed regulation which is not considered to be significant under the procedures and criteria prescribed by Executive Order 12044 and as implemented by Department of Transportation Regulatory Policies and Procedures (44 FR 11034; February 26, 1979). Since this regulatory action involves an established body of technical requirements for which frequent and routine amendments are necessary to keep them operationally current and promote safe flight operations, the anticipated impact is so minimal that this action does not warrant preparation of a regulatory evaluation, and a comment period of less than 45 days is appropriate.

Issued in Seattle, Washington, on December 28, 1979.

C. B. Walk, Jr.,

Director.

[FR Doc. 80-607 Filed 1-9-80; 8:45 am]

BILLING CODE 4910-13-M

---

14 CFR Part 73

[Airspace Docket No. 80-WA-1]

Alteration of Restricted Area

AGENCY: Federal Aviation Administration (FAA), DOT.

ACTION: Notice of proposed rulemaking.

SUMMARY: This notice proposes to extend the time of designation of Restricted Area R-5114 located near Gallup, N. Mex., until July 1, 1980. This extension is necessary so that the U.S. Air Force can conduct additional training missions utilizing advance missile systems. All other aspects of the restricted area would remain unchanged.

DATES: Comments must be received on or before February 11, 1980.

ADDRESSES: Send comments on the proposal in triplicate to: Director, FAA Southwest Region, Attention: Chief, Air Traffic Division, Docket No. 80-WA-1, Federal Aviation Administration, P.O. Box 1689, Fort Worth, Tex. 76101.

The official docket may be examined at the following location: FAA, Office of the Chief Counsel, Rules Docket (AGC-24), Room 916, 800 Independence Avenue, SW., Washington, D.C. 20591.

An informal docket may be examined at the office of the Regional Air Traffic Division.

FOR FURTHER INFORMATION CONTACT: Mr. Everett L. McKisson, Airspace Regulations Branch (AAT-230), Airspace and Air Traffic Rules Division, Air Traffic Service, Federal Aviation Administration, 800 Independence Avenue, SW., Washington, D.C. 20591; telephone: (202) 426-3715.

SUPPLEMENTARY INFORMATION:

Comments Invited

Interested persons may participate in the proposed rulemaking by submitting such written data, views or arguments as they may desire. Communications should identify the airspace docket number and be submitted in triplicate to the Director, Southwest Region, Attention: Chief, Air Traffic Division, Federal Aviation Administration, P.O. Box 1689, Fort Worth, Tex. 76101. All communications received on or before February 11, 1980, will be considered before action is taken on the proposed amendment. The proposal contained in this notice may be changed in the light of comments received. All comments submitted will be available, both before and after the closing date for comments, in the Rules Docket for examination by interested persons.

Availability of NPRM

Any person may obtain a copy of this notice of proposed rulemaking (NPRM) by submitting a request to the Federal Aviation Administration, Office of Public Affairs, Attention: Public Information Center, APA-430, 800 Independence Avenue, SW., Washington, D.C. 20591, or by calling (202) 426-8058. Communications must identify the docket number of this NPRM. Persons interested in being placed on a mailing list for future NPRMs should also request a copy of Advisory Circular No. 11-2 which describes the application procedures.

The Proposal

The FAA is considering an amendment to Part 73 of the Federal Aviation Regulations (14 CFR Part 73) that would extend the time of designation of Restricted Area R-5114, Fort Wingate, N. Mex., located southeast of Gallup, N. Mex. This area would continue to be designated as joint use so that maximum utilization of the restricted area could be realized since the missile firings would be periodic. The altitudes would remain from the surface to unlimited. This restricted area provides airspace for launching Advanced Strategic Air Launched Missiles (ASALM). The airspace utilization time would continue to be approximately 15 minutes per launch once per month. Circumstances beyond the control of the using agency has resulted in rescheduling the launchings. The using agency, Deputy for Air Force, Armament Development and Testing Center, White Sands Missile Range, N. Mex. 8802, will serve as lead agency for purposes of compliance with the National Environmental Policy Act (NEPA). Comments on any land use problems can be addressed to Douglas W. Brazelton, LT COL, USAF Representative, FAA SW Region, P.O. Box 1689, Fort Worth, Tex. 76101. Subpart B of Part 73 was republished in the **Federal Register** on January 2, 1980, (45 FR 679).

The Proposed Amendment

Accordingly, pursuant to the authority delegated to me, the Federal Aviation Administration proposes to amend § 73.51 of Part 73 of the Federal Aviation Regulations (14 CFR Part 73) as republished (45 FR 711) as follows:

§ 73.51 [Amended]

In § 73.51 R-5114 Fort Wingate, N. Mex., under Time of designation, "March 31, 1980," is deleted and "July 1, 1980," is substituted therefor.

(Secs. 307(a) and 313(a), Federal Aviation Act of 1958 (49 U.S.C. 1348(a) and 1354(a)); Sec. 6(c), Department of Transportation Act (49 U.S.C. 1655(c)); and 14 CFR 11.65.)

The FAA has determined that this document involves a proposed regulation which is not significant under Executive Order 12044, as implemented by DOT Regulatory Policies and Procedures (44 FR 11034; February 26, 1979). Since this regulatory action involves an established body of technical requirements for which frequent and routine amendments are necessary to keep them operationally current and promote safe flight operations, the anticipated impact is so minimal that this action does not warrant preparation of a regulatory evaluation and a comment period of less than 45 days is appropriate.

Issued in Washington, D.C., on January 7, 1980.

B. Keith Potts,

Acting Chief, Airspace and Air Traffic Rules Division.

[FR Doc. 80-814 Filed 1-9-80; 8:45 am]

BILLING CODE 4910-13-M

DEPARTMENT OF ENERGY

Federal Energy Regulatory Commission

18 CFR Parts 280 and 284

[Docket No. RM80-11]

Statement of Policy on Distributor Access to Outer Continental Shelf Gas; Extension of Time for Comment

January 4, 1980

AGENCY: Federal Energy Regulatory Commission.

ACTION: Notice of Extension of Time for Comment.

SUMMARY: On November 16, 1979, the Federal Energy Regulatory Commission issued a Notice of Proposed Rulemaking (Statement of Policy on Distributor Access to Outer Continental Shelf Gas, 44 FR 67166, November 23, 1979). The notice prescribed a comment period ending December 10, 1979. On December 7, 1979, a notice was issued extending the comment period to January 7, 1980. This document further extends the comment period.

DATE: The period for filing comments on this rulemaking is hereby further extended to February 8, 1980.

ADDRESS: Office of the Secretary, Federal Energy Regulatory Commission, 825 North Capitol Street, N.E., Washington, D.C. 20426, (202) 357-8400.

FOR FURTHER INFORMATION CONTACT: Robert Platt, Office of the General Counsel, (202) 357-8450.

Kenneth F. Plumb,

Secretary.

[FR Doc. 80-775 Filed 1-9-80; 8:45 am]

BILLING CODE 6450-01-M

DEPARTMENT OF TRANSPORTATION

Coast Guard

33 CFR Chapter I

46 CFR Chapter I

[CGD 79-059]

Standards for Offshore Crane Design, Inspection, Testing, Operation, and Operator Qualification

AGENCY: Coast Guard, DOT.

ACTION: Advance Notice of Proposed Rulemaking.

SUMMARY: The public is invited to participate at the earliest stages in the development of design, inspection, testing, and operation of cranes offshore. The operation of cranes offshore involves a serious risk of harm to personnel and property which better qualified personnel, safer equipment,

and improved operating techniques should reduce.

DATES: Comments must be received on or before March 10, 1980.

ADDRESSES: Comments should be submitted in writing. Comments may be mailed to: Commandant (G–CMC/TP24) (CGD 79–059), U.S. Coast Guard Headquarters, Washington, DC 20593. Comments may be delivered to and will be available for examination or copying at the Marine Safety Council (G–CMC/TP24), Room 2418, U.S. Coast Guard Headquarters, 2100 Second St., SW., Washington, DC 20593, (202) 426–1477, from 7:30 a.m. to 4 p.m. Monday through Thursday except holidays.

Copies of all standards referred to in this notice are also available for inspection at the Marine Safety Council.

FOR FURTHER INFORMATION CONTACT: Lieutenant (junior grade) Michael Silka, OCS Safety Project (G–MP–3/OCS/TP16), Room 1604, U. S. Coast Guard Headquarters, 2100 Second Street, SW., Washington, DC 20593, (202) 472–5160.

SUPPLEMENTARY INFORMATION: The public is invited to participate by submitting written views, data, or arguments. Comments should include the name and address of the person submitting them, identify this notice (CGD 79–059), and give the reasons for the comments. If an acknowledgement is desired, a stamped, addressed postcard should be enclosed. All comments received before the expiration of the comment period will be considered before further action is taken on this proposal. A notice of proposed rulemaking will be published and further opportunity for comment will be provided before final action is taken.

No public hearing is planned, but one may be held if written requests for a hearing are received and it is determined that the opportunity to make oral presentations will be beneficial.

Drafting Information

The principal persons involved in drafting this notice are Lieutenant (jg) Michael Silka, Outer Continental Shelf Safety Project, Office of Merchant Marine Safety, and Mr. Stephen H. Barber, Project Counsel, Office of the Chief Counsel.

Background

Cranes are commonly used offshore to transfer personnel, supplies, and equipment between service vessels and industrial vessels, mobile offshore drilling units (MODU's), and fixed structures. For the purpose of this notice, a crane is considered to be a fixed or mobile machine designed primarily to lift a load and move the load in a horizontal plane. Because of the dynamic conditions under which cranes operate at sea and the direct risk to personnel being transferred, some minimum design criteria for cranes used offshore appears desirable. In addition, operator training and qualification requirements may be desirable because available casualty statistics suggest that many of the accidents and structural failures involving offshore cranes are contributed to by the operator.

At present, there are two sets of regulations applicable to various offshore cranes. Parts 107, 108, and 109 to Title 46 of the Code of Federal Regulations (43 FR 56802–56837; December 4, 1978) contain Coast Guard requirements for crane design, inspection, recordkeeping, certification, and operation; but these parts apply only to cranes on domestic MODU's. Section 7 of U. S. Geological Survey Outer Continental Shelf Order No. 5 (44 FR 29291; May 18, 1979) prescribes requirements for crane design, inspection, recordkeeping, operation, and crane operator qualification. However, this order applies only to fixed installations and will be withdrawn by the U. S. Geological Survey if the Coast Guard promulgates requirements applicable to cranes on these installations.

The purpose of this notice is to solicit the public's assistance in answering the following questions with respect to cranes on structures, domestic and foreign mobile offshore drilling units, and industrial vessels (such as construction and pipelaying barges) engaged in OCS activities or otherwise subject to Coast Guard jurisdiction:

a. Do present requirements for offshore cranes provide for an adequate level of safety?

b. Should present requirements be extended to cover all cranes on all of these vessels and structures? If not, which categories of cranes, vessels, and structures should be excluded?

c. What new requirements, if any should be considered?

In addition to these general questions, the Coast Guard is also seeking specific information in the following areas.

A. Equipment Design

1. Is there a need for new minimum design standards for pedestal mounted revolving cranes?

2. If so, what design requirements are needed? What existing standards should be considered?

3. Does American Petroleum Institute (API) Specification for Offshore Cranes, 2C, Second Edition, February 1972 (with supplement two), as incorporated in Section 7 of OCS Order No. 5, provide adequate design standards for these cranes? Copies of API Specification 2C are available from the American Petroleum Institute, Division of Production, 300 Corrigan Tower Building, Dallas, Texas 75201.

4. Is API Specification 2C, as modified by 46 CFR 108.601 for domestic MODU's, a more desirable standard? What other modifications or additions, if any, to API Specification 2C are desirable?

5. The reliability of load moment devices is often questioned because recalibration is frequently necessary after shock loading. With this in mind, what are the advantages and disadvantages of using load moment devices instead of load indicators and boom-angle indicators as presently required by Section 10.1 of API Specification 2C?

6. Are personnel who are capable of recalibrating and repairing load moment devices, including the electronic components, normally employed on the vessel or structure? Are these personnel capable of recalibrating and repairing standard load indicators?

7. Should it be required that the weight of each load be determined and marked before the load is lifted?

8. Should heavy lift cranes (large capacity cranes designed as an integral part of a vessel and used primarily for controlled lifts during construction activities) be excluded from any new design standards?

9. Is there a need for minimum design standards for mobile cranes, such as those used on industrial vessels?

10. Do offshore companies generally perform their own crane inspections or are independent agencies used?

11. Are cranes used offshore routinely load tested? What procedures are used?

12. The Society of Automotive Engineers Recommended Practice for Rating Lift Cranes on Fixed Platforms Operating in the Ocean Environment (SAE J 1238) establishes calculation procedures for determining dynamic loads, and a load rating chart format, based on various sea conditions. Should this recommended practice be incorporated into regulations? Copies of SAE J 1238 are available from the Society of Automotive Engineers, Inc., 400 Commonwealth Drive, Warrendale, PA 15096.

B. Operator Qualifications

1. Are minimum standards for qualifying crane operators on domestic and foreign mobile offshore drilling units, industrial vessels, and structures engaged in OCS activities needed? If so, what standards should be considered?

2. What orientation and training programs for offshore crane operators

are currently used by industry? Are they conducted by company staff or by independent agencies?

3. Approximately how much "hands-on" training and actual operating time is necessary to enable an operator to understand the capabilities of a particular crane and to safely handle all loads, including personnel?

4. Assuming that an operator has experience operating shore-based cranes, what additional training should be required to familiarize the operator with offshore operations?

C. Inspection, Operation and Recordkeeping

1. Is there a need for new minimum standards for operation, inspection, and recordkeeping for pedestal-mounted revolving cranes?

2. Does American Petroleum Institute Recommended Practice 2D, "Recommended Practice for Operation and Maintenance of Offshore Cranes" (API RP 2D), provide adequate operation, inspection, and recordkeeping standards? What changes or additions should be considered? Copies of API RP 2D are available at the address in paragraph A(3).

3. Is there a need for minimum standards for operation, inspection, and recordkeeping for mobile cranes? Is API RP 2D adequate? What additions or changes to API RP 2D should be considered?

4. What other standards for operation, inspection, and recordkeeping should be considered?

Impact

Identification of problems associated with offshore cranes and crane operation will not necessarily result in new regulations, as alternatives to regulation may be pursued. In the event that regulations are proposed, the economic and other consequences of the proposals on the private sector, consumers, and Federal, State, and local governments must be assessed. Therefore, it is requested that each recommendation contain an assessment of the economic and other effects that it may have. Any assessments prepared by the Coast Guard, together with all comments and assessments received as a result of this notice, will be placed for public review and comment at the office of the Marine Safety Council (see Addresses).

(43 U.S.C. 1333(d); 46 U.S.C. 362, 367, 375, 391, and 395).

December 31, 1979.

R. H. Scarborough,

Vice Admiral, U.S. Coast Guard, Acting Commandant.

[FR Doc. 80-789 Filed 1-9-80; 8:45 am]

BILLING CODE 4910-14-M

ENVIRONMENTAL PROTECTION AGENCY

40 CFR Part 52

[FRL 1387-7]

Approval and Promulgation of Implementation Plans; Arizona State Implementation Plan Revision

AGENCY: Environmental Protection Agency.

ACTION: Notice of Proposed Rulemaking.

SUMMARY: Revisions to the Arizona Department of Health Services' (ADHS) Rules and Regulations for Air Pollution Control have been submitted to the Environmental Protection Agency (EPA) by the ADHS for the purpose of revising the Arizona State Implementation Plan (SIP). The intended effect of these revisions is to update the rules and regulations, to correct deficiencies in the SIP and partially fulfill the requirements of Part D of the Act for nonattaiment areas. Other portions of the Arizona Part D SIP have been proposed in separate **Federal Register** notices: June 11, 1979 (44 FR 33433); October 30, 1979 (44 FR 62296); July 5, 1979 (44 FR 39234), and July 6, 1979 (44 FR 39480). This notice provides a description of the proposed revisions, discusses the applicable Clean Air Act requirements, and invites public comments on the revisions especially with respect to the requirements of Part D of the Clean Air Act, "Plan Requirements for Nonattainment Areas." On April 4, 1979 (44 FR 20372) EPA published a General Preamble for Proposed Rulemaking on Approval of Plan Revisions for Nonattainment Areas. In addition, EPA published four Supplements to the General Preamble on July 2, 1979 (44 FR 20372), August 28, 1979 (44 FR 50371), September 17, 1979 (44 FR 53761), and November 23, 1979 (44 FR 67182). The General Preamble supplements this proposal by identifying the major considerations that will assist EPA's evaluation of the submittal.

DATES: Comments may be submitted by February 11, 1980.

ADDRESSES: Comments may be sent to: Regional Administrator, Attn: Air and Hazardous Materials Division, Air Technical Branch, Regulatory Section (A-4), Environmental Protection Agency, Region IX, 215 Fremont Street, San Francisco CA 94105.

Copies of the proposed revisions and EPA's associated Evaluation Report are contained in document file No. NAP-AZ-3 and are available for public inspection during normal business hours at the EPA Region IX Office at the above address and at the following locations:

Arizona Department of Health Services, Bureau of Air Pollution Control, 1740 West Adams Street, Phoenix AZ 85007.

Arizona Department of Health Services, Bureau of Air Pollution Control, Southern Regional Office, 5055 East Broadway, Suite C-209, Tucson AZ 85711.

Public Information Reference Unit, Room 2922 (EPA Library), 401 "M" Street, S.W., Washington D.C. 20460.

FOR FURTHER INFORMATION CONTACT: Douglas Grano, Chief, Regulatory Section, Air Technical Branch, Air and Hazardous Materials Division, Environmental Protection Agency, Region IX (415) 556-2938.

SUPPLEMENTARY INFORMATION:

Background

New provisions of the Clean Air Act, enacted in August 1977, Pub. L. No. 95-95, require states to revise their SIPs for all areas that do not attain the National Ambient Air Quality Standards (NAAQS). The amendments required each state to submit to the Administrator a list of the NAAQS attainment status for all areas within the state. The Administrator promulgated these lists, with certain modifications, on March 3, 1978 (43 FR 8962). State and local governments were required to develop, adopt, and submit to EPA revisions to their SIP, for nonattainment areas, by January 1, 1979 which meet the requirements of Part D of the Clean Air Act and which provide for attainment of the NAAQS as expeditiously as practicable.

EPA had promulgated the designations for Arizona listed in the March 3, 1978 Federal Register notice since the State did not submit its attainment status designations in time to comply with the requirements of Section 107(d) of the Clean Air Act. The State subsequently submitted designations on August 15, 1978 and May 21, 1979. As a result, three Federal Register notices have been published amending the attainment status designations in Arizona.

On March 19, 1979 (44 FR 16388), the carbon monoxide and photochemical oxidants (ozone) nonattainment areas in Arizona were reduced in size from Maricopa and Pima Counties to the areas immediately surrounding Phoenix and Tucson (these areas being defined by given geographical coordinates).

On April 10, 1979 (44 FR 21261), Arizona's previous countywide nonattainment designations for particulate matter and sulfur oxide were redesignated to smaller areas in the vicinity of the measured violations.

On September 19, 1979 (44 FR 54292), the area immediately surrounding Tucson was redesignated to an ozone attainment area.

To date, portions of nonattainment area plans (NAPs) have been submitted by the State for the Phoenix and Tucson areas. However, due to statewide jurisdiction provisions, these NAPs must be supplemented by State regulations adopted by the ADHS. For sources under State jurisdiction located in nonattainment areas, the following Part D requirements for NAPs must be fulfilled by these State regulations:

1. Adoption in legally enforceable form of all reasonably available control measures necessary to provide for attainment or, for some measures, where adoption by 1979 is not possible, a schedule for development, adoption, submittal, and implementation of these measures.

2. A permit program for major new or modified sources consistent with section 173 of the Clean Air Act.

3. In ozone nonattainment areas projecting attainment by 1982, such as the Maricopa County Urban Planning Area, the revision must provide for adoption of legally enforceable regulations to reflect the application of reasonably available control technology (RACT) to those major stationary sources (more than 100 tons/year potential emissions) for which EPA has published a Control Techniques Guideline by January 1978, and a commitment to adopt RACT regulations for additional sources to be covered by guidelines.

Amendments to Chapter 3 of the ADHS Rules and Regulations, *Air Pollution Control,* and the *Arizona Testing Manual for Air Pollution Emissions* were adopted January 3, 1979 by the ADHS. These amendments recodify and generally revise the entire set of the State of Arizona's air pollution control regulations. In order to expedite EPA's review of the Arizona NAPs, this notice addresses only those portions of the State's submittal which appear to relate to Part D requirements of the Clean Air Act. Separate **Federal Register** notices will address the individual NAPs as well as the remainder of the State regulations.

Description of Proposed Revisions

On January 4 and January 23, 1979, the ADHS submitted Chapter 3 of the ADHS Rules and Regulations, *Air Pollution Control,* and the *Arizona Testing Manual for Air Pollution Emissions,* respectively, to EPA for incorporation into the SIP. This notice identifies and discusses portions of the ADHS submittal which appear to relate to provisions of Part D of the Clean Air Act. However, this notice does not address the State's new source review regulations because a February 13, 1979 letter from the Governor of Arizona requested that EPA delay action on these regulations. New source review regulations, which are required by Part D provisions, will be the subject of a future **Federal Register** notice following submittal of the regulations by the State.

Additionally, in response to a request from the Governor on May 4, 1979, this notice is not proposing action on regulations relating to copper smelters. These regulations will also be the subject of a future **Federal Register** notice.

The State regulations proposed for approval in this notice are listed below and include definitions, ambient air quality standards, particulate matter and volatile organic compound control rules on existing sources, emission control rules on mobile point sources, emission testing methods, and a statement of State and local jurisdiction.

Arizona Department of Health Services Rules and Regulations

Chapter 3: Air Pollution Control

Article 1. Definitions

R9-3-101. Definitions.

Article 2. Ambient Air Quality Standards

R9-3-201. Non-specific particulate.
R9-3-202. Sulfure dioxide.
R9-3-203. Non-methane hydorcarbons.
R9-3-204. Photochemical oxidants.
R9-3-205. Carbon monoxide.
R9-3-206. Nitrogen dioxide.

Article 3. Permits

R9-3-310. Test methods and procedures.

Article 4. Emissions From Existing and New Non-Point Sources

R9-3-401. General
R9-3-402. Unlawful open burning.
R9-3-403. Forestry mangement.
R9-3-404. Open areas.
R9-3-405. Roadways and streets.
R9-3-406. Material handling.
R9-3-407. Storage piles.
R9-3-408. Mineral tailings.
R9-3-409. Agricultural practices
R9-3-410. Evaluation of non-point source emissions.

Article 5. Existing Stationary Point Source Performance Standards

R9-3-510. Standards of performance for existing storage vessels for petroleum liquids.
R9-3-514. Standards of performance of existing sewage treatment plants.
R9-3-523. Standards of performance of existing concrete batch plants.
R9-3-525. Standards of performance of existing dry cleaning plants.
R9-3-526. Sandblasting operations.
R9-3-527. Spray painting operations.

Article 6. Emissions From Mobile Point Sources (New and Existing)

R9-3-601. General.
R9-3-602. Off-road machinery.
R9-3-603. Heater-planer units.
R9-3-604. Roadway and site cleaning machinery.
R9-3-605. Asphalt or tar kettles.

Article 11. Jurisdiction and Authority

R9-3-1101. Jurisdiction.

Arizona Testing Manual for Air Pollutant Emissions

Section 1.0, Arizona Source Testing Policy
Section 3.0, Environmental Protection Agency Reference Methods (40 CFR Part 60, Appendix A)
Section 4.0, Environmental Protection Agency Performance Specifications (40 CFR Part 60, Appendix B)

Discussion

The regulations listed above must be evaluated to determine whether they are consistent with the provisions of Section 110(a)(2) and Part D of the Clean Air Act.

Section 110(a)(2) and Part D require that SIP revisions contain enforceable emission limitations and provide for the attainment and maintenance of the NAAQS. Rule revisions which strengthen the SIP requirements are consistent with this provision and provide support to the revised control strategies contained in the NAPs for Phoenix and Tucson. In addition, the rules must meet certain Part D requirements where they impact a designated nonattainment area as discussed above.

The following discussion proposes specific action on the Arizona State rules and regulations, and provides the rationale upon which EPA formed its conclusions. Additional support documents are contained in document file No. NAP-AZ-3.

Definitions

The January 4, 1979 submittal of R9-3-101, *Definitions,* is an entirely new list of defined terms and is intended to replace the currently approved SIP definitions. Many terms have been added which were not previously defined. Of the amended definitions, all are equivalent or more stringent than the previously approved ones, except for those identified below.

EPA is proposing to approve all of the newly submitted defintions with the exception of "copper matte," "lowest achievable emission rate" (LAER),

"particulate matter," and "process source." No action is being taken on "copper matte" and "particulate matter" because they are related to copper smelters. Similarly, no action is being taken on "LAER" since it is part of the State's new source review program. Finally, "process source" is not proposed for action in this notice due to reasons discussed below in the *Particulate Control Rules* section.

Ambient Air Quality Standards

Rules R9-3-201 through R9-3-206 revise the Arizona air quality standards. Five of these six regulations specify ambient concentrations and averaging periods that are identical to the current National Ambient Air Quality Standards (NAAQS). The remaining one, R9-3-204, *Photochemical Oxidants*, specifies ambient concentrations and averaging periods identical to the former NAAQS for photochemical oxidants. Since regulations R9-3-201 through R9-3-206 are at least as stringent as the NAAQS, they are consistent with Section 110(a)(2) and Part D. Therefore, they are proposed to be approved.

Particulate Control Rules

EPA is proposing to approve rules R9-3-401 through R9-3-410, which govern emissions from non-point sources. These rules generally contain work-practice type requirements intended to minimize fugitive particulate emissions. EPA's review indicates that the new rules contain an equivalent level of control as that in the currently approved SIP for those sources covered by the current SIP. Additionally, requirements for sources not currently covered in the SIP have been added, strengthening the coverage overall. These rules are also consistent with the NAP requirements identified above since they provide the necessary emission limitations toward attainment of the total suspended particulate (TSP) standards.

Rule R9-3-514 controls particulate emissions from sewage treatment plant incinerators at essentially the same level as the currently approved SIP. Thus, this rule is proposed to be approved. However, the current SIP rule R9-3-303, *Incinerators*, submitted September 16, 1975, is proposed to be retained since this present SIP coverage applies to all types of incinerators.

Rule R9-3-523 regulates concrete batch plants by visible emissions limit and fugitive dust controls. This rule is proposed to be approved since concrete batch plants were not previously regulated in the SIP.

Rule R9-3-526 requires that dust emissions from sandblasting operations be minimized by specified good modern practices. This rule is proposed to approved since there is not previous SIP requirement for these emission sources. The three rules discussed above (R9-3-514, R9-3-523, and R9-3-526) are also proposed to be approved since they represent RACT and are thus consistent with NAP requirements.

Finally, EPA is proposing to approve rules R9-3-601 through R9-3-605, which govern emissions from mobile point sources. These rules contain opacity limits and work practice requirements not currently in the SIP for certain mobile point sources. These rules are also consistent with NAP requirements since they provide necessary emission limitation toward attainment of the TSP standards.

The following rules also govern particulate emissions from existing stationary point sources, but use the term "emission point" (defined at R9-3-101 (A.47)) as the basis for setting individual emission limits:

R9-3-502 (Unclassified sources).
R9-3-508 (Asphalt concrete plants).
R9-3-511 (Secondary lead smelters).
R9-3-512 (Secondary brass and bronze ingot production plants).
R9-3-513 (Iron and steel plants).
R9-3-516 (Coal preparation plants).
R9-3-517 (Steel plants: existing electric arc furnaces).
R9-3-518 (Kraft pulp mills).
R9-3-520 (Lime manufacturing plants).
R9-3-521 (non-ferrous metals industry sources).

With respect to these rules and definition R9-3-101 (A. 101), "Process source", EPA received a May 18, 1979 letter from ADHS in which several revisions to the January 4, 1979 submittal were proposed in response to the *Draft EPA Comments* transmitted to the State on April 3, 1979. The *Draft EPA Comments* indicated that these rules should be revised so as to set one allowable emission limit for all equipment which performs the same function. These revised rules are expected to be submitted as SIP revisions soon. Thus, EPA is proposing no action on the January 4, 1979 submittals indicated above.

EPA is additionally proposing no action on the following rules since technical problems are contained in the rules and the State has indicated that these technical problems will be considered in their SIP revision process:

R9-3-501 (Visible emissions: general).
R9-3-503 (Fuel burning equipment).
R9-3-504 (Incinerators).
R9-3-505 (Portland cement plants).
R9-3-519 (Stationary rotating machinery).
R9-3-524 (Fossil-fuel fired industrial and commercial equipment).
R9-3-528 (Ammonium sulfide manufacturing plants).

VOC Emission Control Rules

EPA is proposing to approve three submitted regulations controlling volatile organic compound (VOC) emissions from existing stationary point sources (i.e., R9-3-510, R9-3-525, and R9-3-527) since they strengthen current SIP limitations and thus are consistent with Section 110.

R9-3-510 (Storage of Petroleum Liquids)

Rule R9-3-510 contains control requirements for petroleum liquid storage containers, petroleum product dock loading facilities, and pumps and compressors which handle volatile organic compounds. The volatility of gasoline is also regulated under this rule. The proposed revisions to the current SIP control requirements should result in a decrease in emissions due to additional sources impacted by the revisions. Thus, rule R9-3-510 is consistent with Section 110 since it strengthens the SIP requirements, and therefore is approvable.

This regulation would also impact nonattainment area requirements of Part D if there are VOC sources under State jurisdiction (discussion of VOC sources under county jurisdiction is included in the June 11, 1979 (44 FR 33432) and the October 30, 1979 (44 FR 62296) Federal Register notices located in an ozone nonattainment area). With respect to the Maricopa County Urban Planning Area (the only ozone nonattainment area in Arizona), EPA compared this regulation to the following Control Techniques Guideline documents (CTGs): Fixed-Roof Tanks, Bulk Gasoline Terminals, Bulk Gasoline Plants, and Service Station Stage I Gasoline Vapor Recovery. The CTGs provide information on available air pollution control techniques, and certain recommendations of what EPA calls the "presumptive norm" for RACT.

Our review indicates that only the fixed-roof tank requirements of rule R9-3-510 are equivalent to RACT. However, EPA policy requires RACT rules for the above-listed source categories to be adopted only for *major* sources (100 tons/year potential) in an area, such as the Maricopa County Urban Planning Area, that expects to attain the 0.12 ppm ozone standard by 1982. Since EPA has received documentation from the ADHS that there are no such *major* sources in the Maricopa County ozone nonattainment area, rule R9-3-510 is also consistent with respect to Part D.

R9-3-525 (Dry Cleaning Plants)

Rule R9-3-525 required 90% emission reductions for dry cleaning plants utilizing petroleum solvents and the

minimizing of emissions by specified good modern practices for plants utilizing chlorinated synthetic solvents. Since there are no current dry cleaning plant requirements in the SIP, this rule is approvable as an SIP revision under Section 110. However, the State should note that a new CTG has been published discussing RACT for perchloroethylene dry cleaning systems. New regulations representing RACT will be required by July 1, 1980 for *major* sources located in the Maricopa County ozone nonattainment area.

R9-3-527 (Spray Painting Operations)

Rule R9-3-527 contains requirements to minimize organic solvent emissions from spray painting operations by specified good modern practices. Since there are no current regulations controlling spray painting operations in the SIP, this rule is also approvable as an SIP revision under Section 110. However, new regulations representing RACT will be required by July 1, 1980 for *major* sources located in the Maricopa County ozone nonattainment area due to new CTGs recently published for certain surface coating operations.

Jurisdiction

Rule R9-3-1101, *Jurisdiction*, defines which air pollution sources the State of Arizona has exclusive jurisdiction over. These sources include any existing source which has the potential to emit 75 tons of air contaminants per day, copper smelters, oil refineries, air pollution generated by State activities, mobile or portable combustion engines, and motor vehicles. Since this rule provides an equivalent statement of jurisdiction as that in the currently approved SIP, it is proposed to be approved.

Emission Testing Methods

Section 1.0 of the *Arizona Testing Manual for Air Pollutant Emissions* details administrative requirements for source testing. Sections 3.0 and 4.0 are identical to the EPA Reference Methods (40 CFR Part 60, Appendix A) and the EPA Performance Specifications (40 CFR Part 60, Appendix B), respectively. These provisions are consistent with the Federal SIP requirements for testing procedures found in 40 CFR 52.12. Therefore, these Sections of the *Arizona Testing Manual*, and rule R9-3-310, *Test methods and procedures*, which references the testing manual for enforcement purposes in the State rules and regulations, are proposed to be approved as SIP revisions.

Sections 2.0 and 5.0 are the remaining portions of the *Arizona Testing Manual* and are not proposed for action.

Section 2.0 is the associated test method for particulate emissions in the presence of sulfuric acid mists and sulfur oxides. Since these provisions significantly affect copper smelters and the Governor of Arizona withdrew the State's copper smelter regulations as SIP revisions on May 4, 1979, EPA proposes no action on this test method at this time.

Section 5.0 is compromised of test methods for hazardous air pollutants. These test methods implement Section 112 of the Clean Air Act, which concerns the National Emission Standards for Hazardous Air Pollutants (NESHAPS) and are not appropriate for inclusion in a State Implementation Plan fulfilling Section 110 and Part D requirements of the Act. Therefore, these test methods will be neither approved nor disapproved by EPA as part of an applicable implementation plan. They will, however, be reviewed in determining whether to delegate authority to implement the NESHAPS regulations in the State of Arizona under the appropriate provisions of Section 112. Announcement of such delegation would appear in a separate **Federal Register** notice.

40 CFR Part 52

In addition to the proposed actions discussed in this notice, EPA proposes to remove certain Federally promulgated regulations from the Code of Federal Regulations, 40 CFR Part 52. The following Federally promulgated regulations or specified portions are proposed to be rescinded, as requested by ADHS on September 19, 1979, because they have been replaced by revised control measures and/or regulations:

§ 52.137 *Employer carpool incentive program.*
§ 52.138 *Bus/carpool matching program.*
§ 52.139 *Management of parking supply.*

Also, EPA proposes to rescind:

§ 52.129 *Review of new sources and modifications:* Subsection (f).

This section contains EPA promulgated regulations for review of new or modified indirect sources. However, EPA proposes to rescind the promulgation of the indirect source review program because it has been determined to be invalid under section 110 of the Clean Air Act.

Public Comments

Under section 110 of the Clean Air Act as amended, and 40 CFR Part 51, the Administrator is required to approve or dissapprove regulations submitted as revisions to the SIP. The Regional Administrator hereby issues this notice setting forth these revisions as proposed rule-making and advises the public that interested persons may participate by submitting written comments to the Region IX Office.

Comments received on or before February 11, 1980 will be considered. Comments received will be available for public inspection at the Arizona Department of Health Services, the EPA Region IX Office and the EPA Public Information Reference Unit.

The Administrator's decision to approve or disapprove the proposed revisions will be based on the comments received and on a determination whether the amendments meet the requirements of Section 110 and Part D of the Clean Air Act and 40 CFR Part 51, Requirements for Preparation, Adoption, and Submittal of State Implementation Plans. EPA believes the available period for comments is adequate because:

(1) The regulations have been available for inspection and comments since May 1, 1979.

(2) EPA's Notice of Receipt/Availability published in the May 1, 1979 **Federal Register** (44 FR 25472) indicated that the comment period would be 30 days; and

(3) EPA has a responsibility under the Act to take final action as soon as possible after July 1, 1979 on that portion of the SIP that addresses the requirements of Part D.

Under Executive Order 12044 EPA is required to judge whether a regulation is "significant" and therefore subject to the procedural requirements of the Order or whether it may follow other specialized development procedures. EPA labels these other regulations "specialized". EPA has reviewed the regulations being acted upon in this notice and determined that they are specialized regulations not subject to the procedural requirements of Executive Order 12044.

Authority: Sections 110, 129, 171 to 178, and 301(a) of the Clean Air Act as amended (42 U.S.C. § 7410, 7501 to 7508, and 7601(a)).

Dated: December 11, 1979.

Sheila M. Prindiville,

Acting Regional Administrator.

[FR Doc. 80-756 Filed 1-9-80; 8:45 am]

BILLING CODE 6560-01-M

40 CFR Part 180

[FRL 1387-1; OPP-300020]

Proposed Exemptions from Requirement of a Tolerance for Certain Inert Ingredients in Pesticide Formulations

AGENCY: Office of Pesticide Programs, Environmental Protection Agency (EPA).

ACTION: Proposed rule.

SUMMARY: This notice proposes that certain additional inert (or occasionally active) ingredients in pesticide formulations be exempted from tolerance requirements. The proposal was submitted by various firms. This amendment would permit the use of the exempted inerts in pesticide products.

DATE: Comments must be received on or before February 11, 1980.

ADDRESS COMMENTS TO: Dr. Ken Bailey, Hazard Evaluation Division, (TS-769), Office of Pesticide Programs, EPA, Crystal Mall #2, 1921 Jefferson Davis Hwy., Arlington, VA 20460.

FOR FURTHER INFORMATION CONTACT: Dr. Ken Bailey at the above address (703/557-7395).

SUPPLEMENTARY INFORMATION: At the request of several interested persons, the Administrator is proposing to amend 40 CFR 180.1001 by exempting certain additional pesticide chemicals which are inert (or occasionally active) ingredients in pesticide formulations from tolerance requirements.

Inert ingredients are all ingredients which are not active ingredients as defined in 40 CFR 162.3(c), and include but are not limited to the following types of ingredients (except when they have pesticidal efficacy of their own): Solvents such as water; baits such as sugar, starches, and meat scraps; dust carriers such as talc and clay; fillers; wetting and spreading agents; propellants in aerosol dispensers; and emulsifiers. The term inert is not intended to imply nontoxicity; the ingredients may or may not be chemically active.

The preambles to proposed rulemaking documents of this nature include the common or chemical name of the substances under consideration, the name and address of the firm making the request for the exemption, and the toxicological and other scientific bases used in arriving at a conclusion of safety in support of the exemption.

Inert ingredient	Firm	Bases for Approval
Corn gluten meal	A. E. Staley Manufacturing Co., 2200 El Dorado St., Decatur, IL 62525.	A Recognized animal feed item. Processing of corn to produce gluten meal is unlikely to form hazardous substances.
Iso-octadecanol	Em Laboratories, Elmsford, NY 10523.	The compound is converted in mammalian systems to naturally occurring fatty acids.
Polyvinylpyrrolidone, alkyl-modified (C_4 group in position 3 of pyrrolidone ring)	EM Laboratories, Elmsford, NY 10523.	Polvinylpyrrolidone was previously cleared under 21 CFR 173.55 as a food additive. 90-day rat feeding studies. The minor addition of the C_4 group to polyvinylpyrrolidone is not expected to result in additional toxicity since the chemical bond is nonlabile.

Based on the above information on the chemistry of these substances, and a review of their use, it has been found that, when used in accordance with good agricultural practice, these substances are useful and do not pose a hazard to the environment. It is concluded, therefore, that the proposed amendments to 40 CFR 180.1001 will protect the public, and it is proposed that the regulation be established as set forth below.

Any person who has registered or submitted an application for the registration of a pesticide, under the Federal Insecticide, Fungicide, and Rodenticide Act, which contains any of the ingredients listed herein, may request on or before February 11, 1980 that this rulemaking proposal be referred to an advisory committee in accordance with section 408(e) of the Federal Food, Drug, and Cosmetic Act.

Interested persons are invited to submit written comments on the proposed regulation. The comments must bear a notation indicating both the subject and the petition/document control number, "OPP-300020". All written comments filed in response to this notice of proposed rulemaking will be available for public inspection in Room 820, Crystal Mall, Bldg. #2, from 8:30 a.m. to 4 p.m. Monday through Friday.

Under Executive Order 12044, EPA is required to judge whether a regulation is "significant" and therefore subject to the procedual requirements of the Order or whether it may follow other specialized development procedures. EPA labels these other regulations "specialized". This proposed rule has been reviewed, and it has been determined that it is a specialized regulation not subject to the procedural requirements of Executive Order 12044.

Dated: December 31, 1979.

Douglas D. Campt,

Director, Registration Division.

(Section 408(e) of the Federal Food, Drug, and Cosmetic Act [21 U.S.C. 3469(e)].)

It is proposed that Part 180, Subpart D, section 180.1001 be amended by alphabetically inserting new items in the tables in paragraph (d), as follows:

§ 180.1001 Exemptions from the Requirement of a Tolerance.

* * * * *

(d) * * *

Inert ingredients	Limits	Uses
* * * * *		
Corn gluten meal		Attractant.
* * * * *		
Iso-octadecanol	Not more than 2% of pesticide formulation.	Defoaming agent.
* * * * *		
Polyvinylpyrrolidone, alkyl modified (C_4 group in position 3 pyrrolidone ring).		Surfactants, related adjuvants of surfactants.
* * * * *		

[FR Doc. 80-757 Filed 1-9-80; 8:45 am]

BILLING CODE 6560-01-M

40 CFR Part 180

[FRL 1387-3; PP 8F2073/P125]

Proposed Tolerance for the Pesticide Chemical Ethofumesate

AGENCY: Office of Pesticide Programs, Environmental Protection Agency (EPA).

ACTION: Proposed rule.

SUMMARY: This notice proposes that a tolerance be established for residues of the herbicide ethofumesate on grass straw at 1 part per million (ppm). The proposal was submitted by Fisons Corp. This amendment would establish a maximum permissible level for residues of ethofumesate in or on grass straw.

DATE: Comments must be received on or before February 11, 1980.

ADDRESS COMMENTS TO: Dr. Willa Garner, Product Manager (PM) 23, Registration Division (TS-767), Office of Pesticide Programs, EPA, 401 M Street, SW., Washington, DC 20460.

FOR FURTHER INFORMATION CONTACT: Dr. Willa Garner at the above address (202/755-1397).

SUPPLEMENTARY INFORMATION: On May 10, 1978, notice was given (43 FR 20051) that Fisons Corp., Agricultural Chemical Div., Two Preston Court, Bedford, MA 01730, had filed a petition (PP 8F2073)

with the EPA. This petition proposed that 40 CFR 180.345 be amended by the establishment of a tolerance for combined residues of the herbicide ethofumesate (2-ethoxy-2,3-dihydro-3,3-dimethyl-5-benzofuranyl methanesulfonate) and its metabolites 2-hydroxy-2,3-dihydro-3,3-dimethyl-5-benzofuranyl methanesulfonate and 2,3-dihydro-3,3-dimethyl-2-oxo-5-benzofuranyl methanesulfonate (both calculated as the parent compound) in or on the raw agricultural commodity grass hay at 0.5 ppm. No comments were received in response to this notice of filing.

Fisons Corp. subsequently amended the petition by proposing that the tolerance be increased to 1.0 ppm and be expressed in terms of grass straw. Because of the potential increase in exposure of humans to residues as a result of the higher tolerance, the tolerance is being proposed at this time to provide an opportunity for public comment. The data submitted in this petition and other relevant material have been evaluated. The data included metabolism studies in beans, sugar beets, ryegrass, rats and a lactating cow; bluegrass and ryegrass residue studies; a 28-day cattle feeding study; a rat acute oral toxicity study with a lethal dose (LD_{50}) greater than (>) 6,400 milligrams (mg)/kilogram (kg) of body weight (bw); a sub-acute dermal toxicity study with an (LD_{50}) > 1,440 mg/kg bw; a 90-day rat and swine feeding study with no-observed-effect levels (NOEL) of 2,000 ppm and 1,250 ppm, respectively; a rat dominant lethal study (negative at 10,000 ppm); a rat (Walker) carcinoma study (negative); a rat teratology study with an NOEL of 80 mg/kg bw; a two-year rat dietary and oncogenicity study with an NOEL of 1,000 ppm and no oncogenic potential noted.

Studies currently lacking to reinforce the present findings are an oncogenicity and lifetime feeding study in a second mammalian species, a three-generation reproduction study in rats and a two-year dog feeding study. In a letter of March 7, 1979, the petitioner agreed to submit the oncogenicity study by June 1980, the rat three-generation reproduction study by February 1980, the two-year dog study by January 1980 and agreed not to contest withdrawal of ethofumesate from the U.S. market should adverse findings develop.

Tolerances have previously been established for residues of ethofumesate ranging from 0.05 ppm on meat to 1.0 ppm on sugar beet tops. A food additive tolerance for sugar beet molasses has been established at 0.5 ppm (21 CFR 561.235). Based upon the NOEL of 1,000 ppm in the rat two-year feeding study, the acceptable daily intake (ADI) has been set at 0.5 mg/kg bw/day with a maximum permissible intake (MPI) of 30 mg/day/60-kg man. The metabolism of ethofumesate is adequately understood, and an adequate analytical method (gas chromatography using a sulfur specific flame photometric detector) is available for enforcement purposes.

Tolerances previously established under 40 CFR 180.345 will be adequate to cover residues that would result in meat, fat, and meat byproducts of cattle, goats, hogs, horses, and sheep, and there is no reasonable expectation of residues in eggs, poultry, and milk.

There are no pending regulatory actions against continued registration of ethofumesate. The pesticide is considered useful for the purpose for which the tolerance is being sought, and it is concluded that the tolerance of 1.0 ppm in or on grass straw will protect the public health. It is proposed, therefore, that the tolerance be established as set forth below.

Any person who has registered or submitted an application for the registration of a pesticide, under the Federal Insecticide, Fungicide, and Rodenticide Act, which contains any of the ingredients listed herein, may request on or before February 11, 1980 that this rulemaking proposal be referred to an advisory committee in accordance with section 408(e) of the Federal Food, Drug, and Cosmetic Act.

Interested persons are invited to submit written comments on the proposed regulation. The comments must bear a notation indicating both the subject and the petition/document control number, "PP 8F2073/P125". All written comments filed in response to this notice of proposed rulemaking will be available for public inspection in the office of PM 23, Room 353, East Tower, from 8:30 a.m. to 4 p.m. Monday through Friday.

Under Executive Order 12044, EPA is required to judge whether a regulation is "significant" and therefore subject to the procedural requirements of the Order or whether it may follow other specialized development procedures. EPA labels these other regulations "specialized". This proposed rule has been reviewed, and it has been determined that it is a specialized regulation not subject to the procedural requirements of Executive Order 12044.

Dated: December 31, 1979.

Douglas D. Campt,

Director, Registration Division.

(Section 408(e) of the Federal Food, Drug, and Cosmetic Act [21 U.S.C. 346a(e)].)

It is proposed that Part 180, Subpart C, § 180.345 be revised in the heading and introductory paragraph and in the table by alphabetically inserting grass straw at 1 ppm, as follows:

§ 180.345 Ethofumesate; tolerances for residues.

Tolerances are established for combined residues of the herbicide ethofumesate (2-ethoxy-2,3-dihydro-3,3-dimethyl-5-benzofuranyl methanesulfonate) and its metabolites 2-hydroxy-2,3-dihydro-3,3-dimethyl-5-benzofuranyl methanesulfonate and 2,3-dihydro-3,3-dimethyl-2-oxo-5-benzofuranyl methanesulfonate (both calculated as the parent compound) in or on the following raw agricultural commodities:

Commodity	Parts per million
* * * * *	
Grass, straw	1
* * * * *	

[FR Doc. 80-758 Filed 1-9-80; 8:45 am]

BILLING CODE 6560-01-M

40 CFR Part 250

[FRL 1389-3]

Hazardous Waste and Hazardous Waste Management; Notice of Availability of Information

AGENCY: Environmental Protection Agency.

ACTION: Notice of availability of information and request for comments.

SUMMARY: The Environmental Protection Agency (EPA) is today making available to the public for comment two reports on the environmental and economic impacts of various regulatory alternatives for small quantities of hazardous waste (less than 5,000 kg/mo). These reports were completed after the close of the original comment period on EPA's proposed regulations implementing Section 3001–3004 of the Resource Conservation and Recovery Act (RCRA) as amended.

DATES: Comments on these reports are due no later than February 11, 1980.

ADDRESSES: Comments should be addressed to Deborah Vallari, Docket Clerk, Office of Solid Waste (WH-562), U.S. Environmental Protection Agency, 401 M Street, SW., Washington, D.C. 20460, (202) 755-9173. Communications should identify the regulatory docket and subject as follows: "Sections 3001 and 3002: Small Quantities."

Copies of these reports are available for reading at the EPA Library—Public Information Reference Unit (Room 2404) and the Subtitle C Docket Room (Room 2711), both located at 401 M Street, SW., Washington, D.C. and at all EPA Regional Office libraries during the hours of 9:00 a.m. to 4:30 p.m., Monday through Friday.

Copies of these reports are also available from Ed Cox, Solid Waste Information, U.S. E.P.A., 26 W. Saint Clair Street, Cincinnati, Ohio 45268, (513) 684-8491. If available copies run out, the Agency may charge $0.20 per page for photocopying.

FOR FURTHER INFORMATION CONTACT: Deborah Vallari, Docket Clerk, Office of Solid Waste (WH-562), U.S. Environmental Protection Agency, 401 M Street, SW., Washington, D.C. 20460, (202) 755-9173.

SUPPLEMENTARY INFORMATION: On December 18, 1978, EPA published proposed standards for generators of hazardous waste under Section 3002 of RCRA (43 FR 58969-57981). In § 250.29(a) of those regulations, EPA proposed to exempt from full regulation all generators of small quantities of hazardous waste (defined as persons generating "no more than 100 kilograms . . . of hazardous waste in any one month period"), provided the waste was disposed of in a permitted hazardous waste facility or a RCRA Subtitle D facility. Comments on other regulatory mechanisms for dealing with small quantities of hazardous waste were also solicited (43 FR 58970).

Since the publication of those proposed regulations, EPA has obtained additional information on the subject of regulating small quantities of hazardous waste. This information is presented in the following two reports:

Technical Environmental Impacts of Various Approaches for Regulating Small Volume Hazardous Waste Generators, 2 Vols., December 1979, EPA Contract Numbers 68-02-2613 and 68-03-2560, TRW Environmental Engineering Division, Redondo Beach, CA. [SW-185c.1 and SW-185c.2]

This report identifies small generator industries on a Standard Industrial Classification (SIC) basis, and estimates the number of generators and hazardous waste quantities for various quantity generation ranges up to 5,000 kg/mo. The report also discusses the environmental impacts resulting from the regulation of small generators including: percent of hazardous waste regulated under various regulatory options, impacts on the capacity of hazardous waste disposal facilities (Subtitle C facilities), and impacts on disposal of small quantities of "hazardous" waste in sanitary landfills (Subtitle D facilities). Volume I is a 115 page technical analysis of waste quantities, number of generators, and environmental impacts. Volume II is a 570 page set of Appendices containing industry (SIC) assessment summaries with estimates of waste quantities and number of generators for each SIC, and miscellaneous supporting data including samples of completed industry questionnaries, samples of state hazardous waste survey data sample calculations of waste quantity and generator profiles, and examples of reported damage incidents involving small quantities of hazardous waste.

Economic Impacts of RCRA Approaches to the Regulation of Generator of Small Volumes of Hazardous Waste, December 1979, EPA Contract Number 68-01-4778, Temple, Barker & Sloane, Inc., Lexington, MA. [SW-186C]

This 200 page report discusses the impacts of various regulatory options for small quantities of hazardous waste on waste generators and on the administrative resources of the States and the Agency. The generator impacts analysis includes projected unit administrative and technical cost of individual generator compliance, an assessment of industry-wide impacts for selected industries, and projections of national costs to, and impacts on, all small generators. The State and Agency impacts analysis projects resource needs under various regulatory options, and compares those needs to State and Agency needs for other parts of the RCRA program, and to the projected resources available to the States and the Agency.

EPA is making these reports available to the public today to solicit comments on the accuracy of the data presented and the validity of the conclusions reached. This is not to be construed as a reopening of the comment period on the Agency's Section 3001-3004 regulations, and commenters should limit their comments accordingly.

Dated: January 7, 1980.

James N. Smith,

Acting Assistant Administrator for Water and Waste Management.

[FR Doc. 80-792 Filed 1-9-80; 8:45 am]

BILLING CODE 6560-01-M

FEDERAL COMMUNICATIONS COMMISSION

47 CFR Parts 2 and 94

[SS Docket No. 79-18; RM-2824; RM-1635; RM-1849; RM-2045; FCC 79-853]

Providing Regulations for Use of Radio in Public Utility Distribution Automation Systems

AGENCY: Federal Communications Commission.

ACTION: Further Notice of Proposed Rule Making SS Docket 79-18.

SUMMARY: The FCC has revised its initial proposal to amend Part 94 of its Rules to provide regulations for the use of radio in public utility multiple addresed distribution automation systems. A new frequency plan and new interference criteria are proposed. This action is being taken in response to a petition by the Utilities Telecommunications Council.

DATES: Comments due by February 19, 1980 and Reply comments due by March 10, 1980.

ADDRESSES: Federal Communications Commission, 1919 M Street NW., Washington, D.C. 20554.

FOR FURTHER INFORMATION CONTACT: Eugene Thomson, Private Radio Bureau, (202) 632-6497, or Fred Thomas, Office of Chief Scientist, (202) 632-6350.

Adopted: December 19, 1979.

Released. January 10, 1980.

In the matter of Amendment of Part 2 and 94 of the Rules to Provide Regulations for Use of Radio in Public Utility Distribution Automation Systems. SS Docket No. 79-18 RM-2824, RM-1635, RM-1849, RM-2045.

By the Commission: Commissioner Lee absent.

1. This proceeding was initiated by a *Notice of Proposed Rule Making*, released March 1, 1979, FCC 79-93 (44 FR 12221). The *Notice* was in response to a petition filed by the Utilities Telecommunications Council (UTC), which requested allocations of frequencies in the 900 MHz range to be used for "distribution automation," which includes automatic meter reading as well as load management, environmental monitoring, and other operational functions.

2. In its petition, UTC proposed to: Reallocate the 940.100-940.725 MHz band from the Land Mobile Service to the Operational Fixed Service; Pair the 940.100-940.725 MHz frequencies with those in the 952.100-952.725 MHz band; Create 26 channel pairs in the 940.100-940.725 and 952.100-952.725 MHz band with a maximum assignable channel

width of 25 kHz (upon a showing of need, assign two adjacent channels to form one 50 kHz channel); Protect existing users of reallocated channels from interference for a 10-year period; Initially, set aside 12 channel pairs for eligible licensees in the Power Radio Service and make the remaining frequencies available to other users eligible to hold licenses under Part 94 of the rules to meet similar fixed, multiple address communication requirements; Restrict the newly reallocated bands to multiple address, fixed operations; and Adopt definitions and technical standards to govern the implementation and use of the reallocated frequency bands.

3. In the *Notice*, the Commission proposed amending Part 94 of its Rules to include new regulations for the use of radio in public utility distribution automation systems. A frequency plan was proposed allocating 26 frequency pairs and 12 unpaired frequencies in the 952–960 MHz frequency band. These frequencies were chosen because it was felt that the petitioner's request could be accommodated within the 952–960 MHz band. The proposed plan would not require any reallocation of spectrum in the 928–947 MHz band which is reserved for land mobile use.

4. In the proposed frequency plan, 10 of the paired channels would have a spacing of 7.75 MHz between transmit and receive frequencies, and the remaining 16 paired channels would be spaced 3.9 MHz. Eight of the 7.75 MHz spaced channels, and four of the 3.9 MHz spaced channels would be for exclusive Power Radio Service use for distribution automation purposes. The remaining 14 channel pairs and the 12 unpaired frequencies would be made available to all eligible Part 94 users.

5. Twelve organizations submitted comments by June 15, 1979. These were:

Utilities Telecommunications Council (UTC)
Motorola, Inc. (Motorola)
General Electric Company (GE)
H.F. Systems, Inc. (H.F. Systems)
Central Committee on Telecommunications of the American Petroleum Institute (API)
Special Industrial Radio Service Association, Inc. (SIRSA)
Ameican Gas Association (AGA)
Associated Public-Safety Communictions Officers, Inc. (APCO)
Telocator Network of America (Telocator)
California Energy Commission (CEC)
Electric Power Research Institute (EPRI)
Department of Energy (DOE)

6. Reply comments were submitted by July 15, 1979, by:

Utilities Telecommunications Council (UTC)
Telocator Network of America (Telocator)
American Telephone and Telegraph Company (did not file initial comments) (ATT)
H.F. Systems, Inc. (Filed one day late but accepted into the record since good cause for the late filing was shown) UHF Systems)

7. The petitioner, UTC, and most of the comments opposed the Commission's proposal for two major reasons. First, it was argued that the proposed spacing of 3.9 MHz between transmit and receive frequencies would make the equipment cost prohibitively high. Secondly, some of the proposed frequencies would result in serious adjacent channel interference to existing operational-fixed systems and could not be used. The result, it was claimed, would be that, in many areas of the country, there would be few actual usable frequencies for distribution automation systems.

8. Supporting its arguments, with respect to equipment costs, UTC states that using the basic cost of $65 for existing VHF, one-way equipment as referenced in the SCI report,[1] and adding a factor of 50 to 65 percent additional costs for two-way capability and operation in the 900 MHz band, the cost of remote unit equipments with optimum transmitter-receiver spacing of 24 MHz would be about $100 to $110. This would be competitive with other potential distribution automation systems, and would be economically viable. UTC estimates that narrower frequency spacings would escalate costs, with the proposed 7.75 MHz spacing costing 25 percent more ($125–$135), and 3.9 MHz spacing costing about 50–60 percent more ($150–$176). UTC then states that on cost alone, there would be no incentive to manufacture or use equipment with 3.9 MHz spacing, and that for all practical purposes, the proposed 16 frequency pairs with 3.9 MHz spacing would be unusable.

9. With respect to the interference potential, it was pointed out in the comments that the proposed frequency plan contains four "band edges" which are adjacent to existing operational-fixed channels, and that the use of certain proposed frequencies could be expected to cause significant levels of interference. It was also pointed out in the comments that the interference mechanism is the result of the expected sideband splatter energy from the distribution automation transmitters entering the operational-fixed receivers. The exact number of potential interfering frequencies would depend upon geographic spacing, power levels, antenna heights, etc. The Commission's records indicate that there are approximately 500 operational-fixed stations that could be affected by such adjacent channel interference. Therefore if these proposed frequencies could not be used because of expected adjacent channel interference, the number of usuable channels for distribution automation systems is further reduced. As an example, of the 10 proposed 7.75 MHz spaced pairs, 3 would be unusable because of the interference potential. This would leave 7 usable pairs, of which only 5 were allocated for exclusive Power Radio Service use. Four of the proposed unpaired frequencies also have adjacent channel interference potential. Coupled with the cost unsuitability of the 16 proposed 3.9 MHz spaced frequency pairs, UTC argues that the few remaining frequencies cannot possibly approach satisfying the utilities' requirements.

10. We have evaluated these arguments closely in light of the comments and additional information received from UTC and others. We agree that the proposed frequency plan will not meet the spectrum requirements of the Power Radio Service or of distribution automation systems as a whole. Therefore, we are amending our frequency allocation proposal.

11. Additionally, UTC claimed its original estimate in its petition of the number of channels needed to meet these new requirements of the Power Radio Service were conservative and that additional frequencies would be needed to meet the future spectrum needs of this service. In its petition, UTC asked for 26 channel pairs with 12 being for the exclusive use of eligible licensees in the Power Radio Service. In their comments, UTC says their latest studies show that the number of frequency pairs needed for privately owned electric utility distribution automation operations alone will be about 20 pairs. As a basis for this statement, it was indicated that as a minimum, 17 pairs were needed for the Northeast seaboard, 28 pairs for the Southern California area based upon an analysis by the Southern California Edison Company, between 16 and 24 pairs in Ohio, and 15 pairs in Northern California. These requirements as noted above were only for investor owned electric utilities, and did not include the municipal and co-op electrics, or water, steam, and gas-only utilities. This would indicate that more than 28 channels would be needed to satisfy the spectrum requirements of this service. However, as UTC noted, this does not take into account that some utilities may use means other than radio in their distribution automation operations. UTC

[1] System Control, Inc. Final Report, Contract FCC-0244.

thus concludes that 20 channel pairs would be a more realistic requirement for the energy utilities.

12. Also of interest are the number of channels available on a shared basis to both the Power Radio Service and other eligible Part 94 users. Since UTC states that 20 channel pairs are now needed exclusively for the Power Radio Service, the number of shared frequency pairs would be reduced from 14 to 6 unless the total number of channel pairs is increased above the 26 pairs originally proposed by UTC and in our *Notice*.

13. In view of the additional information as submitted in the comments and reply comments, we feel that UTC's current estimate of 20 frequency pairs exclusively for the Power Radio Service is a realistic one. We have concern, however, over the number of shared frequency pairs being reduced from 14 to 6. Motorola, in its comments, notes that in the 952 MHz band the frequency assignments can be extended to 952.8375 MHz instead of 952.725 MHz as originally proposed in our Notice. This would make an additional 4 channel pairs available for a total of 30 instead of 26 as originally proposed. We are therefore proposing to adopt the Motorola proposal and allocate 20 frequency pairs for exclusive use by the Power Radio Service with an additional 10 frequency pairs (for a total of 30) and 14 unpaired frequencies for the shared use of all eligible Part 94 users.

14. We do, however, have concerns about the inefficient use of the spectrum that might develop if this service does not grow as projected. We, therefore are proposing a footnote NG 121 which will require assignments be made in the lowest frequency available which will not cause harmful interference to stations in that area already assigned frequencies in accordance with the Table of Frequency Allocations. This way if the service does not develop as projected we will be able to reallocate the unused portion of the spectrum at a later date.

15. In the comments, there were three frequency plans submitted as alternatives to the frequency plan of our *Notice*. They were submitted by Department of Energy, UTC, and Motorola and are as follows.

16. The DOE plan yields 26 pairs with 7.3 MHz spacing. However, the plan involved the use of additional operational-fixed frequencies and would result in co-channel and adjacent channel interference to about 300 additional operational-fixed stations. This plan would be subject to greater limitations than our originally proposed plan and is therefore not acceptable.

17. The frequency plan submitted by UTC utilized frequencies in the 952 MHz region paired with spectrum in the 940 MHz area. This plan yielded 26 frequency pairs with 12 MHz spacing between transmit and receive frequencies with 20 of these channels for use by the Power Radio Service and the remaining six for use by all users eligible under Part 94. In further filings, UTC proposed that it would be more desirable from an economic standpoint to pair 928 MHz frequencies with the 952 MHz frequencies to obtain a spacing of 24 MHz. Both the 928 and 940 MHz frequencies are in the band 928–947 MHz which is presently allocated for land mobile "reserve."

18. The Motorola plan proposes 30 frequency pairs, 20 reserved for eligible users in the Power Radio Service and 10 available to all eligible Part 94 users, utilizing 928 and 952 MHz paired frequencies, yielding a frequency spacing of 24 MHz. In addition, the plan includes 8 unpaired frequencies in the 956 MHz area, and 6 unpaired frequencies in the 959 MHz area, with sufficient guard bands to prevent adjacent channel interference to operational-fixed stations. The 14 unpaired frequencies would be available to all eligible Part 94 users.

19. After considering the plans presented and other alternatives of our own, we have concluded that the Motorola proposed frequency plan has merit and appears to us to be the best alternative to satisfy the spectrum needs of this service. As noted above, the frequency pairs of this plan have a 24 MHz spacing which should bring the cost of the equipment down to an acceptable range.

Also, as noted above, this plan avoids the problems of adjacent channel interference to operational-fixed stations. Therefore, we are proposing this plan with a few minor adjustments. The specific frequency plan we propose is given in the attached Appendix.

20. In proposing this plan, it will be necessary to reallocate the 928–929 MHz band, as it is currently allocated for land mobile reserve. When the current allocation was made for this band in the Second Report and Order of Docket 18262 (46 FCC 2d 752 (1974)), it was done, as was the rest of the reserve bands, with flexibility in mind so the spectrum could be used for the best possible purpose. We feel that this proposed allocation will make good use of the spectrum and is in the public interest as it will help the nation meet its energy needs.

21. We also agree with this choice because it is at the edge of the reserve band which leaves the rest of this band as continuous spectrum for other allocations and because it is located in a portion of the reserved bands that cannot be paired up at a 45 MHz spacing with another reserve band for land mobile use.

22. There is concern with the 928–929 MHz band in that it is adjacent to an ISM band, 902–928 MHz, which contains a large number of microwave ovens.[2] However, we do not foresee this as a problem because the remote stations, which do not have any choice in locations, and which in general would be located closest to these microwave ovens, would be receiving in the 952 MHz band well away from oven operation, and because microwave ovens have not been manufactured in this band since May 1975, so that the total number operating in the band are decreasing and will continue to do so.

23. An additional point concerning the 928–929 MHz band that must be addressed are requests to use this band by other users. At present there are two other petitions under consideration at the Commission which request this band. They were received from the Ad Hoc Private Paging Committee (RM-3047) and Telocator Network of America (RM-3068). Both requested 7 MHz of spectrum from 928–941 MHz for use by paging systems.

However, we feel that there is adequate spectrum at 929 MHz and above to meet the needs of both paging petitions should the merits of either or both of these petitions demonstrate a need for a reallocation of spectrum.

24. In the Notice, the Commission stated that its proposal for a 25 kHz channel bandwidth was tentative, and requested comments on whether narrower bandwidth might be appropriate. The response was not particularly informative. With the exception of those by HF Systems, the comments merely stated that anything less than 25 kHz channels would not be cost effective. No relative cost data was provided. Nor were modulation techniques other than frequency modulation discussed for the maximum data rate requirement that appears most likely; i.e., 2400 bits/second.

25. HF Systems described a system using differential phase shift keying that would transmit 33,000 bits/second in a bandwidth of 50 kHz. The Commission cannot predict whether data rates of this magnitude will be required. Nevertheless, it is noteworthy that a technical spectral efficiency of 0.66 bit/hertz was proposed versus less than 0.1

[2] The microwave ovens in this band that were manufactured before March 1975 may operate between 902–940 MHz.

bit/hertz for the frequency modulated system.

26. The Commission is aware that it is technically possible to transmit digital data with a technical spectral efficiency even greater than 0.66 bits/hertz. The Commission also recognizes, however, that there is a tradeoff between this efficiency and the cost of radio equipment. The Commission cannot ignore either side of this tradeoff.

27. The frequency spectrum is a resource that is becoming increasingly scarce relative to demand. This is especially true for the portion of the spectrum under consideration in this proceeding. While it is allocated without an explicit price, the spectrum does have a greater than zero value. Therefore, the Commission cannot assume that minimum equipment cost at the expense of greater spectrum use is always and without question in the public interest. The Commission must have information by which it can relate equipment cost to various levels of spectral efficiency before it can decide on the option that results in greatest public benefit.

28. Accordingly, the Commission is again requesting definitive comment on the matter of channel bandwidth. Subject to justification, it is tentatively proposing in this Further Notice to adopt a bandwidth of 25 kHz. It does so for two reasons. First, because several commenting parties favored this bandwidth, the Commission assumes that quantitative cost information can be made available to justify this selection. Second, the Commission is particularly sensitive to the cost aspect of the efficiency-cost tradeoff in this particular case. It recognizes the cost implication for utility customers that will be associated with the large number of remote transceivers involved.

29. If, however, quantitative cost data related to levels of spectral efficiency does not materialize in the requested comments, the Commission may find it necessary to compromise on 12.5 kHz channel bandwidth. In this case, wider channels would be authorized only after a showing by each applicant that the 12.5 kHz would not satisfy the data transmission requirement for the system in question.

30. H. F. Systems proposed that a relaxed frequency tolerance would permit more economical systems in the less populated rural areas. However, this would require two sets of equipment standards, one for "urban" and one for "rural" equipment, as well as a categorization of areas with respect to population density, neither of which would seem desirable or practical. The present frequency tolerance in the 952–960 MHz band is 0.0005 percent. In its petition, UTC requested that the tolerance for master and remote stations be 0.0004 percent. In order to minimize the number of tolerances allowed in a frequency band, we are now proposing that the tolerance for master and remote stations operating in the 928–929 and 952–960 MHz bands be a maximum of 0.0005 percent. The operating in the 928–929 and 952–960 MHz bands by a maximum of 0.0005 percent. The operational conditions such as information bandwidth will then dictate the actual tolerance required by the equipment to stay within the 25 kHz authorized bandwidth. It will also allow equipment with 0.0004 percent tolerance to be manufactured if desired.

31. In the petition, UTC proposed interference criteria similar to the short-haul system criteria specified in Section 94.63, and to achieve this protection, it suggested pre-established distance separations for both co-channel and adjacent channel systems, rather than a case-by-case analysis now required in Part 94. To provide the necessary interference protection, the *Notice* required that applicants certify that their proposals would not cause interference to any stations in an existing system in excess to that permitted, unless the licensee of that system would accept lesser protection. The applicant had an option of either coordinating with nearby existing systems or provide a detailed engineering analysis that the required interference protection will be provided. The *Notice* asked for specific comments on this approach.

32. Three responses to the interference protection criteria question were received. The AGA agreed with the proposed criteria. UTC and Motorola opposed it, favoring interference criteria based upon geographic separation rather than a case-by-case study of each transmitter and receiver involved. They argue that there is difficulty in applying the same interference analysis procedures now used for point-to-point systems to omni-directional systems. Present procedures for point-to-point systems involve known locations of all the transmitters and receivers. However, there is no way of knowing the location by latitude and longitude of all future distribution automation transceivers that would be located at customer premises.

33. The comments also claimned that the proposed interference criteria was 15 dB too restrictive, and would result in co-channel separations that were about twice that which is considered adequate. UTC and Motorola proposed the establishment of a co-channel separation distance of 70 miles for distribution automation systems, with the mileage being that between borders of utility service areas. Since this distance is consistent with the separation standards of 800 MHz urban-conventional systems recently adopted in Docket 79–106, we are now proposing that if co-channel systems have at least 70 miles between their service area borders, then only a statement to this effect would be required with the application for frequencies. In cases where the separation is less than 70 miles, an engineering analysis must be submitted to show that sufficient interference protection will be provided. Since the boundaries of the utility service areas are involved in the separation standard, coordination of frequencies will still be required through the Power Radio Service frequency advisory committee.

34. Changes to Sections 2.106 and 94.1 were made to cover the inclusion of 928–929 MHz in the microwave band. Definitions of multiple address, remote stations, and master stations were added to Section 94.3. In addition, we are continuing to propose, with minor editorial changes, the rules as stated in the *Notice* concerning Section 94.15, Policy governing the assignment of frequencies; Section 94.25, Filing of applications; and Section 94.27, Application and standard forms. Section 94.65(a) was completely revised by adding the proposed 25 kHz bandwidth frequencies and reorganizing the listing of the other frequency pairs in the 952–960 MHz band in the order of increasing bandwidth.

35. We are retaining the proposed power limitation for remote stations of 5 watts maximum transmitter output power and 47 dBm maximum effective radiated power (ERP). UTC requested that "intermediary remote stations" be permitted higher power. As we understand, an intermediary site would consist of a master station collecting information from remote stations, and a fixed relay link using directional antennas towards a dispatch center. Their function would be to collect data from the remotes at the customer premises and relay this back to the dispatch center. We feel that such a two-link system, remote-to-intermediary-to-dispatch center could employ distribution automation equipment and frequencies on the remote-to-master link, and normal operational-fixed microwave relay equipment and frequencies on the intermediary-to-dispatch center link.

36. Comments received regarding the proposed system licensing procedures

were favorable. We are therefore continuing to propose that separate applications will be required for each master station, but each application can include any number of remote stations associated with the master. The geographic service area of the system shall also be specified.

37. In the *Notice* we asked that, since distribution automation communications systems have not yet crystalized, what standards would be required to insure compatibility between different systems which may operate in the same area or adjacent areas. The comments received indicated that equipment standards would be established by the utilities and the equipment manufacturers and that such standards should not be a subject for Commission action.

38. Telocator Network of America (Telocator) requested that radio common carriers be authorized to use the proposed frequencies for control and repeater stations functioning in conjunction with wide-area, multiple transmitter paging networks. The Commission has previously considered and denied,[3] a similar request by Telocator to share 32 pairs of frequencies in the 952–960 MHz common carrier band could be used for the prupose, and that equipment costs in teh 2100 MHz band with existing services. The Commission's decision was based on the conclusion that the 2100 MHz band were comparable to those in the 952–960 MHz band. Telocator has presented no new evidence to contradict that finding nor to otherwise show that public interest would be served by allowing RCCs to share the proposed frequencies with the private services. Consequently, we are denying Telocator's request.

39. API requested that the frequencies to be allocated for exclusive Power Radio Service use should also be made available to the Petroleum Radio Service for use in offshore areas. In our new proposal, Petroleum Radio Service users would be eligible to use 10 frequency pairs and 14 unpaired frequencies for any multiple address system they may have at offshore locations. The request for use of all the frequencis in question for other than multiple address use at offshore locations is considered beyond the scope of this proceeding. However, such use may be considered on an individual case basis.

40. Also, the AGA requested that the final rules not preclude the use of mobile units in distribution automation applications, citing that automatic meter reading can also be accomplished through the use of mobile vehicles to interrogate the fixed meters of customers. The weight of evidence gathered in the proceedings in Docket 20005 indicated that radio automatic meter reading systems, by themselves, would not be justified, but that automatic meter reading systems which could also perform load management and other related utility functions may be justified. Since we have not received evidence to the contrary, it is felt that the inclusion of mobile units to operate in the fixed service is beyond the scope of this proceeding.

41. Authority for issuance of this Notice is contained in Sections 4(i) and 303(r) of the Communications Act of 1934, as amended, 47 U.S.C. 154(i) and 303(r). Pursuant to procedures set out in Section 1.415 of the Rules and Regulations, 47 CFR 1.415, interested persons may file comments on or before February 19, 1980, and reply comments on or before March 10, 1980. All relevant and timely comments will be considered by the Commission before final action is taken in this proceeding. In reaching its decision, the Commission may take into consideration information and ideas not contained in the comments, provided that such information or a writing indicating the nature and source of such information is placed in the public file, and provided that the fact of the Commission's reliance on such information is noted in the Report and Order.

42. In accordance with the provisions of Section 1.419 of the Rules and Regulations, 47 CFR 1.419, formal participants shall file an original and 5 copies of their comments and other materials. Participants wishing each Commissioner to have a personal copy of their comments should file an original and 11 copies. Members of the general public who wish to express their interest by participating informally may do so by submitting one copy. All comments are given the same consideration, regardless of the number of copies submitted. All documents will be available for public inspection during regular business hours in the Commission's Public Reference Room at its headquarters in Washington, D.C.

43. For further information concerning this document, contact Eugene Thomson (202) 632–6497, or Fred Thomas (202) 632–6350.

[3] Memorandum Report and Order, FCC 79–274, RM–2261, Adopted May 1, 1979.

Federal Communications Commission.

William J. Tricarico,

Secretary.

Appendix

It is proposed that Parts 2 and 94 of the Commission's Rules be amended as follows:

PART 2—FREQUENCY ALLOCATIONS AND RADIO TREATY MATTERS; GENERAL RULES AND REGULATIONS

1. In § 2.106, the Table of Frequency Allocations is amended for the band 928–929 MHz to read:

§ 2.106 Table of frequency allocations.

Band (MHz)	Service	Class of station	Frequency (MHz)	Nature of service of station
7	8	9	10	11
* * *	* *	* *		
928 to 929 (NG 121).	Fixed	Operational fixed.		(NG 120).
929 to 947	Land mobile.			Reserve.
* * *	* *	* *		
952 to 960 (NG10) (NG121).	Fixed	International fixed public (Puerto Rico and Virgin Islands only). International control. Operational fixed.		(NG120).

2. In the list of footnotes immediately following the table in § 2.106, footnote NG10 is amended and new footnotes NG120 and NG121 are added in proper numerical sequence, to read as follows:

* * * * *

NG10 Frequencies in this band will be selected for assignment in such a manner that, on an engineering basis, the highest frequency in the band is assigned which will not cause harmful interference to stations in that area already assigned frequencies in accordance with the Table of Frequency Allocations except as provided in NG 121.

* * * * *

NG120 The frequencies in the 928 and 952 MHz band may be assigned to multiple address systems as specified in Part 94.

NG121 Frequencies in the 928 and 952 MHz bands, to be used by multiple address operations, will be selected for assignment in such a manner that, on an engineering basis, the lowest frequency in the band is assigned which will not cause harmful interference to stations in that area already assigned frequencies in accordance with the Table of Frequency Allocations.

* * * * *

PART 94—PRIVATE OPERATIONAL-FIXED MICROWAVE SERVICE

2. in § 94.1, paragraph (b) is amended as follows:

§ 94.1 Basis and purpose.

* * * * *

(a) * * *

(b) The purpose of the rules in this part is to prescribe the manner in which operational-fixed radio facilities may be licensed and operated in the microwave spectrum of 928–929 MHz and above 952 MHz.

3. In § 94.3, the following definitions are added in appropriate alphabetical order, and the definition of *Microwave* is modified to read as follows:

§ 94.3 Definitions.

* * * * *

Master station. A station operating on frequencies in the 952, 956, or 959 MHz bands, which either controls, activates or interrogates remote stations, and/or receives from multiple remote stations.

* * * * *

Multiple address. A one or two-way radio system utilizing microwave frequencies listed in Section 94.65(a)(1). Operation is normally from a fixed station transmitting and/or receiving (usually in an omnidirectional pattern) to and/or from multiple remote stations.

* * * * *

Remote station. A station operating on frequencies in the 928, 956, or 959 MHz bands which is either controlled, activated or interrogated by, and may respond to a master station, or transmits one-way to a master station.

* * * * *

Microwave. For purposes of this part, frequencies from 928–929 MHz and those above 952 MHz.

4. In § 94.15, paragraph (g) is amended to read as follows:

§ 94.15 Policy governing the assignment of frequencies.

* * * * *

(g) Except as provided in paragraph (h) of this Section, applicants requiring multiple transmit frequencies employed on separate paths from a single station location will not normally be authorized more than four of the transmit frequencies available in the band. Further, master and remote stations using frequencies listed in Section 94.65(a)(1) will not normally be authorized more than two frequency pairs.

* * * * *

5. Section 94.25 is amended by adding a new paragraph (i) as follows:

§ 94.25 Filing of applications.

* * * * *

(i) For stations operating on frequencies listed in Section 94.65(a)(1), applications may include any number of remote stations in a single application, but must specify the geographic service area of the applicant in which these remote stations will be located. A separate application must be filed for each master station.

6. In § 94.27, paragraph (a) is amended by adding a new subparagraph (5).

§ 94.27 Application and standard forms.

(a) * * *

(5) New station authorization or modification of license for each master station of a system consisting of a master station and its associated remote stations.

* * * * *

7. In § 94.61, add the following entry to the Table in paragraph (b), and add footnote 19 to read as follows:

§ 94.61 Applicability.

* * * * *

Frequency Band (MHz)	
928 to 929	([19])

* * * * *

[19] Frequencies in this band are paired with the band of 952–953 MHz and are limited for use by multiple address remote stations.

8. In § 94.63, paragraph (d) is amended by a new subparagraph (4) as follows:

§ 94.63 Interference protection criteria for operational-fixed stations.

* * * * *

(d) * * *

(4) Applicants for frequencies listed in Section 94.65(a)(1) shall make the following showings that protection criteria have been met over the entire service area of existing systems. Such showings may be made by the applicant or may be satisfied by a statement from a Frequency Advisory Committee.

(i) A statement that the border of applicants service area is no closer than 70 miles from the service area of existing licensees using the same frequency pair(s) as applicant.

(ii) In cases where the geographic separation standard in paragraph (i) above is not followed, an engineering analysis will be submitted to show the coordination of the proposed assignment with existing systems located closer than those standards. The engineering analyses will include:

(A) Specification of the interference criteria and system parameters used in the interference study.

(B) Nominal service areas of each system included in the interference analysis.

(C) Modified service areas resulting from the proposed system. The propagation models used to establish the service boundary limits must be specified and any special terrain features considered in computing the interference impact should be described.

(D) A statement that all parties affected have agreed to the engineering analysis and will accept the calculated levels of interference.

* * * * *

9. In § 94.65, paragraph (a) is deleted and replaced in its entirety as follows:

§ 94.65 Frequencies.

* * * * *

(a) 928–929 and 952–960 MHz

(1) 25 kHz maximum bandwidth [4]

Persons licensed on these frequencies as of January 1, 1979, may continue to operate as licensed until January 1, 1989.

Paired Frequencies

Remote transit:	*Master transit*
928.1125	[1] 952.1125
928.1375	[1] 952.1375
928.1625	[1] 952.1625
928.1875	[1] 952.1875
928.2125	[1] 952.2125
928.2375	[1] 952.2375
928.2625	[1] 952.2625
928.2875	[1] 952.2875
928.3125	[1] 952.3125
928.3375	[1] 952.3375
928.3625	[2] 952.3625
928.3875	[2] 952.3875
928.4125	[2] 952.4125
928.4375	[2] 952.4375
928.4625	[2] 952.4625
928.4875	[2] 952.4875
928.5125	[2] 952.5125
928.5375	[2] 952.5375
928.5625	[2] 952.5625
928.5875	[2] 952.5875
928.6125	[2] 952.6125
928.6375	[2] 952.6375
928.6625	[2] 952.6625
928.6875	[2] 952.6875
928.7125	[2] 952.7125
928.7375	[2] 952.7375
928.7625	[2] 952.7625
928.7875	[2] 952.7875
928.8125	[2] 952.8125
928.8375	[2] 952.8375

Unpaired Frequencies

Remote:	*Master*
956.2625 [1, 3]	[1, 3] 959.8625
956.2875 [1, 3]	[1, 3] 959.8875
956.3125 [1, 3]	[1, 3] 959.9125
956.3375 [1, 3]	[1, 3] 959.9375
956.3625 [1, 3]	[1, 3] 959.9625
956.3875 [1, 3]	[1, 3] 959.9875
956.4125 [1, 3]	
956.4375 [1, 3]	

[1] Available to all persons eligible under Part 94 for use in multiple address systems.

[2] Available only to persons eligible under 90.63 for licensing in the Power Radio Service for use in multiple address electric, gas, water, or steam utility distribution automation system operations.

[3] Available for single frequency systems utilizing one-way operation.

(2) 50 kHz maximum bandwidth

Paired Frequencies

Transmit (or receive):	*Receive (or transmit)*
956.65	953.05
956.75	953.15
956.85	953.25
956.95	953.35
957.05	953.45
957.25	953.65
957.35	953.75
957.45	953.85
957.65	954.05
957.75	954.15
958.85	954.25
958.05	954.45

[4] When required, upon justification, two adjacent channels may be assigned to provide 50 kHz bandwidth.

Paired Frequencies—Continued

Transmit (or receive):	*Receive (or transmit)*
958.15	954.55
958.25	954.65
958.45	954.85
958.55	954.95
958.65	955.05
958.85	955.25
958.95	955.35
959.05	955.45
959.25	955.65
959.35	955.75
959.45	955.85
959.55	955.95
959.65	956.05

(3) 100 kHz maximum bandwidth

Paired Frequencies

Transmit (or receive):	*Receive (or transmit)*
956.6	953.0
956.7	953.1
956.8	953.2
956.9	953.3
957.0	953.4
957.1	953.5
957.2	953.6
957.3	953.7
957.4	953.8
957.5	953.9
957.6	954.0
957.7	954.1
957.8	954.2
957.9	954.3
958.0	954.4
958.1	954.5
958.2	954.6
958.3	954.7
958.4	954.8
958.5	954.9
958.6	955.0
958.7	955.1
958.8	955.2
958.9	955.3
959.0	955.4
959.1	955.5
959.2	955.6
959.3	955.7
959.4	955.8
959.5	955.9
959.6	956.0
959.7	956.1

(4) 200 kHz maximum bandwidth

Paired Frequencies

Transmit (or receive):	*Receive (or transmit)*
957.15	953.55
957.55	953.95
957.95	954.35
958.35	954.75
958.75	955.15
959.15	955.55

10. In § 94.67 add the following entry to the Table in paragraph (a).

§ 94.67 Frequency tolerance.

(a)* * *

Frequency band MHz	Tolerance as percentage of assigned frequency
928–929	0.0005

* * * * *

11. In § 94.71 a new entry for the 928–929 MHz band in paragraph (b) is added, the entry for the 952–960 band is amended, new footnotes 5 and 6 are added, and a new subparagraph (f) is added to read as follows:

§ 94.71 Emission and bandwidth limitations.

(a)* * *

(b) The maximum bandwidth which will be authorized per frequency assigned is as follows:

Frequency band MHz	Maximum authorized bandwidth
928–929	25kHz[16]
952–960	25, 50, 100 or 200 kHz [1 5]

* * * * *

[5] 25 kHz applies only to the frequencies listed in § 94.65(a)(1).

[6] Consideration will be given on a case-by-case basis to assigning these frequencies to systems employing 50 kHz bandwidth.

* * * * *

(f) For stations utilizing frequencies listed in § 94.65(a)(1), pulse code modulation techniques will only be granted on a case-by-case basis upon an engineering evaluation of the impact on existing and future systems and needs.

12. In § 94.73, add the following entries for the 928–929 MHz band to paragraphs (a)(1) and (2), and footnote 6 to paragraph 2.

§ 94.73 Power limitations.

* * * * *

(1)

Frequency band	Maximum transmitter Output power (watts)
928–929 MHz	5

* * * * *

(2)

Frequency band	Maximum allowable ERP [2] dBm
928–929 MHz	47
952–960 MHz	[3 6] 70

[6] For the unpaired frequencies listed in § 94.65(a)(1), when an omnidirectional transmitting antenna is used, the maximum shall be 60 dBm.

13. In § 94.75, footnote 1 in the Table in paragraph (b), and the last sentence of paragraph (c) are amended, and a new paragraph (g) is added to read as follows:

§ 94.75 Antenna limitations.

* * * * *

(b)* * *

[1] Except for frequencies listed in § 94.65(a)(1) where omnidirectional antennas may be used.

* * * * *

(c) Applicants shall request, and authorization for stations in this service will specify, the polarization of each transmitted signal. When periscope antenna systems or passive repeaters are employed, the applicant shall indicate the expected polarization of the reflected signal. The polarization should be expressed as either horizontal, vertical, or at an angle from vertical. Antenna polarizations of horizontal and vertical should be denoted by the abbreviations (H) and (V), respectively. For antennas using linear polarizations other than horizontal or vertical, the polarization should be stated in degrees measured from the vertical, with angles between 0° and +90° denoting the on-coming electric field vector displacement in a counterclockwise direction, and angles between 0° and −90° denoting the on-coming electric field vector displacement in a clockwise direction. In the event polarization diversity is authorized, the two polarizations must be separated by 90°. Antennas employing other than linearly polarized feed systems will not be authorized except for stations utilizing frequencies listed in § 94.65(a)(1).

* * * * *

(g) For frequencies listed in § 94.65(a)(1), the maximum beamwidth may be 360 degrees. The provisions of paragraph (b) of this section shall not apply to stations licensed on these frequencies where omnidirectional antennas are used.

14. In § 94.107, paragraph (c) is added to read:

§ 94.107 Posting of station authorization, and transmitter identification cards, plates, or signs.

* * * * *

(c) The requirements in paragraphs (a) and (b) of this section do not apply to remote stations using frequencies listed in § 94.65(a)(1).

[FR Doc. 80-832 Filed 1-9-80; 8:45 am]
BILLING CODE 6712-01-M

47 CFR Part 63

[CC Docket No. 78-72]

MTS and WATS Market Structure; Order Granting Extension of Time in Part [1]

AGENCY: Federal Communications Commission.

ACTION: Extensions of time for the filing of certain comments.

SUMMARY: The filing date for reply comments on issues which the Commission may designate to a Joint Board has been extended from January 15, 1980, to February 4, 1980. "Industry model" comments may be filed on or before March 3, 1980.

[1] 44 FR 59578, Oct. 16, 1979.

ADDRESSES: Federal Communications Commission, 1919 M Street, N.W., Washington, D.C. 20554.

FOR FURTHER INFORMATION CONTACT: Kent Nilsson, Common Carrier Bureau (202) 632-9342.

SUPPLEMENTARY INFORMATION:

Memorandum Opinion and Order

In the matter of MTS and WATS Market Structure. CC Docket No. 78-72. [44 FR 59578].

Adopted: January 3, 1980.

Released: January 4, 1980.

By the Chief, Common Carrier Bureau

1. On December 14, 1979, Alascom, Inc. ("Alascom"), through its attorneys, filed a motion (hereinafter "motion") for an extension of time for: (a) the filing of its "industry model" comments in this proceeding; and (b) the filing of its reply comments to the comments of other participants regarding issues which may be designated to a Federal-State Joint Board. In support of its motion, Alascom noted that the Commission had not acted upon its earlier petition captioned "Petition of Alascom, Inc. For Clarification or For Partial Reconsideration" (hereinafter "petition"), which contended that the entry policy question with respect to the Alaska interstate MTS-WATS market has already been resolved in prior proceedings and that other policy questions related to separations, settlements, rate averaging and rate integration with respect to that market have been or will be resolved in prior or pending proceedings. In that petition, Alascom requested that the Supplemental Notice, 73 F.C.C. 2d 222 (released August 30, 1979), be modified to include a declaration that the Commission has already determined that Alascom should provide MTS-WATS service between Alaska and other states on a sole source basis and issue, in the alternative, either a declaration that the Commission will not re-examine that determination in this proceeding or that the prior determinations will be effective until this proceeding has been concluded. That petition contained the additional request that this Commission clarify the relationship between this proceeding and pending proceedings relating to Alaska separations, settlements, and rates.

2. Insofar as the Commission has not ruled upon the requests which were contained in Alascom's petition, it is not inappropriate to grant, to all of the parties to this proceeding, an extension of time for the filing of reply comments on those issues which the Commission may designate for consideration to a Joint Board from January 15, 1980, to February 4, 1980, and an extension of time for the filing of "industry model" comments from February 15, 1980 to March 3, 1980.

3. Accordingly, IT IS ORDERED, pursuant to the authority delegated in Section 0.303(c) of the Commission's Rules and Regulations, 47 CFR § 0.303(c), that the motion for extensions of time in this proceeding by Alascom, Inc. IS GRANTED TO THE EXTENT THAT interested parties may file reply comments on the issues which may be designated to a Joint Board on or before February 4, 1980, and industry model comments may be filed on or before March 3, 1980. The motion for extensions of time by Alascom, Inc. is, in all other respects, DENIED.

Federal Communications Commission.

Philip L. Verveer,

Chief, Common Carrier Bureau.

[FR Doc. 80-842 Filed 1-9-80; 8:45 am]

BILLING CODE 6712-01-M

---

47 CFR Part 73

[BC Docket No. 79-267; RM-3342]

FM Broadcast Station in DeSoto and Potosi, Mo.; Order Extending Time for Filing Reply Comments

AGENCY: Federal Communications Commission.

ACTION: Proposed rule; Order extending time for reply comments.

SUMMARY: Action taken herein extends the time for filing reply comments in a proceeding involving the proposed assignment of FM channels to DeSoto and Potosi, Missouri.

DATE: Reply comments must be filed on or before February 4, 1980.

ADDRESSES: Federal Communications Commission, Washington, D.C. 20554.

FOR FURTHER INFORMATION CONTACT: Mark N. Lipp, Broadcast Bureau, (202) 732-7792.

SUPPLEMENTARY INFORMATION:

In the matter of amendment of § 73.202(b), Table of Assignments, FM Broadcast Stations. (DeSoto and Potosi, Missouri), BC docket No. 79-267 RM-3342.

Adopted: January 3, 1980.

Released: January 4, 1980.

By the Chief, Policy and Rules Division: 1. The Commission has before it a Motion requesting an extension of time for filing reply comments in response to the *Notice of Proposed Rule Making* in the above captioned matter, adopted October 18, 1979, 44 FR. 62917, November 1, 1979. WIL Music Inc. ("WIL"), requests that the date for filing reply comments be extended from January 7, 1980, to February 4, 1980.

2. WIL states that it needs the extra time in order to evaluate the other responses to the *Notice*. In particular, it wishes to study a proposal which suggests a different FM channel assignment than that proposed by the Commission. WIL also notes that due to the recent holiday vacations, its consulting engineers have not had an adequate opportunity to analyze the comments.

3. We believe that the additional time is warranted to permit analysis of other assignment possibilities in this proceeding particularly in view of the intervening holiday period.

4. Accordingly, it is ordered, that the date for filing reply comments in BC Docket 79-267 IS EXTENDED to and including February 4, 1980.

5. This action is taken pursuant to authority found in Sections 4(i), 5(d)(1) and 303(r) of the Communications Act of 1934, as amended, and Section 0.281 of the Commission's Rules.

Federal Communications Commission,

Henry L. Baumann,

Chief, Policy and Rules Division, Broadcast Bureau.

[FR Doc. 80-835 Filed 1-9-80; 8:45 am]

BILLING CODE 6712-01-M

---

47 CFR Part 90

[PR Docket No. 79-334; FCC 79-855]

Facilitating Authorization of Wide-Area Mobile Radio Communications Systems on Frequencies Allocated for Trunked Systems

AGENCY: Federal Communications Commission.

ACTION: Notice of proposed rulemaking.

SUMMARY: The FCC proposes to amend its rules to permit wide-area mobile radio communications systems to operate on frequencies designated for use by trunked land mobile radio systems. The changes in the rules would allow licensees or radio systems in the 800 MHz band to cover wide areas by utilizing one or more satellite base stations within their areas of operation, even though the co-channel geographic separation within the system is not met. The primary base station facilities of the system would be required to operate in the trunked mode, while satellite base station facilities with no more than five channels would be permitted to operate in either the conventional or trunked made.

DATES: Comments must be received on or before March 7, 1980 and Reply comments must be received on or before April 7, 1980.

ADDRESS: Federal Communications Commisson, Washington, D.C. 20554.

FOR FURTHER INFORMATION CONTACT: William P. Berges, Private Radio Bureau, (202) 632-6497.

In the Matter of Amendment of Part 90 of the Commission's Rules to facilitate authorization of wide-area mobile radio communication systems on frequencies allocated for trunked systems.

Adopted: December 19, 1979.

Released: January 3, 1980.

By the Commission.

1. In its Second Report and Order in the 900 MHz land mobile allocation proceeding, Docket No. 18262 (46 FCC 2d 752, adopted May 1, 1974), the Commission allocated a total of 30 MHz of radio spectrum (the bands 806–821 and 851–866 MHz) for private land mobile communication systems. This spectrum was divided into 600 two frequency channels. Of these, 200 were earmarked for so-called "trunked" systems.

2. The present rules governing licensing and operation of trunked systems were designed primarily for mobile radio communication systems operating from a single transmitter site and providing radio service in relatively small areas (normally from 20 to 35 miles in radius). We have authorized a number of such trunked systems. But the needs of some radio users do not fit the single transmitter site configuration. The Commission recognized that problem when it acted on petitions for reconsideration of its Docket No. 18262 allocation. See *Memorandum Opinion and Order*, 51 FCC 2d 945, 985 (1975). There we noted that certain types of activities require wide area or "ribbon" configurations which simply cannot be accommodated adequately by radio systems that employ a single mobile relay (repeater) transmitter. For example, public utilities which serve large areas, as well as state and some county police departments, require effective communications over a wider area than the 20 to 35 mile range usually provided by the single mobile relay system. Similarly, some pipeline companies, highway departments, motor carriers and other types of radio users need "ribbon" type radio systems. Communications provided through a single site is unsuitable for these users. Hence the Commission, in reconsidering the Docket No. 18262 allocation, provided that the specific requirements of individual wide-area and "ribbon" systems would be considered on a case-by-case basis. Nevertheless, we believe that specific provisions for such systems should be made in the rules.

3. We are therefore initiating this proceeding to permit revision of the rules governing trunked radio systems so that "wide-area" and "ribbon" systems may be authorized routinely on the frequencies that have been designated for trunked systems. In so doing, it is appropriate at this juncture that we explain how these special types of radio systems differ from the norm so that the rule revisions which we propose may be better understood. Public utilities employ large fleets of radio equipped vehicles, and thus are good candidates for trunked systems. Many utilities, however, have differing radio needs within different sectors of their wide-area operations. Although a large fleet of vehicles typically operates in the more densely populated geographic core of a utility's service area, usually only a few vehicles serve the outlying and rural sections. Thus, while a fully equipped, multi-channel trunked system may be required at the center of densely-populated service areas, a single-channel base station may be fullly adequate in the remote sections. Yet, many of these vehicles musse flt have the capability to communicate throughout the utility's service area so that in emergencies vehicles and personnel may be moved where needed rapidly. The needs of utilities which we have described are equally applicable to police departments and other radio users whose operational jurisdictions serve large geographic areas.

4. On the other hand, pipeline companies, transportation carriers, highway departments and certain other entities require effective communications over a lengthy but relatively narrow operating area. For these users, too, there is an esssential requirement for communications among vehicles that range along an area, which simply cannot be met by a single transmitter.

5. The proposed rules would introduce needed flexibility into our rules so that large wide-area or "ribbon" type communication systems may be authorized on the frequencies that have been designated for trunked systems. The objective of this proposal is (a) to continue requiring the use of trunked systems in high density communications areas; (b) to allow re-use of one or more of the assigned frequencies in the remote parts of the licensee's operating area; (c) to permit use of those frequencies in a trunked or conventional mode in those remote areas, as determined by the licensee; and (d) to enable units of the licensee's fleet to operate throughout the operating area of the system on common frequencies.

6. Our proposal would amend our rules by adding Section 90.372, as specified in Appendix A. It would allow licensees of radio systems in the 800 MHz band to cover wide areas by utilizing one or more satellite base stations within their areas of operation, even though the co-channel geographic separation within the system is not met. The primary base station facilities of the system would be required to operate in the trunked mode, while satellite base station facilities with no more than five channels would be permitted to operate in either the conventional or the trunked mode. Satellite base stations having more than five channels must operate in the trunked mode. Moreover, a trunked satellite base station may be authorized to use one or more conventional frequencies, if this is necessary to avoid violation of co-channel separation requirements with respect to a co-channel trunked station of another licensee.

7. Section 90.365(b)(1) of our rules prescribes a minimum separation between co-channel trunked systems of 70 miles, except for four very high transmitter sites near Los Angeles, where it is 105 miles. Our proposal here to authorize the use of satellite stations as components of wide-area trunked radio systems necessarily involves relaxation of the heretofore rigid channel re-use standards. We therefore solicit comments specifically addressing our proposal to make the use of satellite stations of trunked frequencies secondary to that of principal stations in unrelated co-channel radio systems. We want to know whether and to what extent secondary use is feasible and whether there are appropriate alternatives.

8. We plan to view the entire area-wide system as a single intergrated operation. Accordingly, mobile units normally communicating with the primary as well as those associated with satellite base stations would be considered for channel loading purposes. On the other hand, only the mobile units normally associated with the primary station would be required to be equipped to operate on all channels authorized for the entire system. We would expect, however, that mobile units associated with satellite stations would have the capacity to operate throughout the system, but they would not be required to be equipped with full-channel capability.

9. Finally, we do not plan to authorize area-wide Specialized Mobile Radio

Systems (SMRs) because our objective here is limited to facilitating the use of trunked frequencies by public safety agencies, utilities, and other licensees which must, in their day-to-day operations, cover large geographic areas. The need for such coverage by specialized mobile systems is not clear. Nevertheless, comments on this point are also invited.

10. Authority for issuance of this Notice is contained in Section 4(i) and 303(r) of the Communications Act of 1934, as amended, 47 U.S.C. 154(i) and 303(r). Pursuant to procedures set out in § 1.415 of the Rules and Regulations, 47 CFR 1.415, interested persons may file comments on or before March 7, 1980, and reply comments on or before April 7, 1980. All relevant and timely comments will be considered by the Commission before final action is taken in this proceeding. In reaching its decision, the Commission may take into consideration information and ideas not contained in the comments, provided that such information or a writing indicating the nature and source of such information is placed in the public file, and provided that the fact of the Commission's reliance on such information is noted in the Report and Order.

11. In accordance with the provisions of § 1.419 of the Rules and Regulations, 47 CFR 1.419, formal participants shall file an original and 5 copies of their comments and other materials. Participants wishing each Commissioner to have a personal copy of their comments should file an original and 11 copies. Members of the general public who wish to express their interest by participating informally may do so by submitting one copy. All comments are given the same consideration, regardless of the number of copies submitted. All documents will be available for public inspection during regular business hours in the Commission's Public Reference Room at its headquarters in Washington, D.C.

12. For further information concerning this document, you may contact William P. Berges, (202) 632-6497.

Federal Communications Commission.

William J. Tricarico,

Secretary.

Appendix

Part 90 of the Commission's Rules would be amended by adding a new Section, 90.372, to read:

§ 90.372 Special Provisions for Wide-Area Trunked Systems.

Where an applicant for trunked facilities demonstrates that the coverage requirements for its normal, day-to-day operations cannot be met adequately from a single base station site, even with the maximum power permitted by this chapter, the Commission may authorize additional, satellite base station facilities within the applicant's area of normal operation, without regard to the co-channel geographic separation requirements prescribed in § 90.365(b)(1) of this chapter, in accordance with the provisions of this section.

(a) Satellite stations shall be authorized to operate in conjunction with a primary trunked base station as part of a single, integrated wide-area radio system, and such satellite stations operations, except as provided in paragraph (b) of this section, shall be limited to reuse some or all of the frequencies assigned to the primary base station.

(b) Satellite base stations may be authorized to operate on frequencies designated for conventional systems if it is necessary to avoid or eliminate interference to a co-channel trunked system of another licensee.

(c) Satellite stations employing no more tha five frequencies may be operated in the trunked or non-trunked mode.

(d) Satellite base stations shall be authorized on a secondary basis to co-channel trunked stations of other licensees, if the satellite station is located at distances less than those prescribed in § 90.365 (b)(1) from the base station site of such co-channel station.

(e) The mobile units normally communicating with the primary trunked base station as well as those communicating with the associated satellite base stations shall be considered in determining the total number of frequencies to be assigned for the operation of the system.

(f) The primary trunked base station and the mobile units normally associated with it shall be equipped to operate on all trunked channels authorized for the entire system.

(g) The provisions of this section shall not apply to applicants claiming eligibility under paragraph (c) of § 90.355 of this chapter.

(h) Definitions:

(1) For the purposes of these sections, a *primary trunked base station* shall be considered to be a base or mobile relay station which serves the licensee's primary area of operation and which meets all of the requirements prescribed by this subpart for trunked systems.

(2) For the purposes of this section, a *satellite base station* shall be considered to be a base or mobile relay station which is used to extend communications coverage within the licensee's normal, day-to-day operating area.

[FR Doc. 80-765 Filed 1-9-80; 8:45 am]
BILLING CODE 6712-01-M

---

47 CFR Part 94

[PR Docket No. 79-337; RM-3241; FCC 79-860]

Facilitating Operation of Low Power, Limited Coverage Systems in the 22,000-23,600 MHz Bands

AGENCY: Federal Communications Commission.

ACTION: Notice of Proposed Rulemaking.

SUMMARY: The FCC proposes new rules which would authorize operation of short haul, low cost, low power microwave systems in the 22,000 to 23,600 MHz band to operational-fixed users. This proposal is in response to a petition from the General Electric Company requesting amendment of the rules to facilitate a low power, limited coverage system in these bands. According to GE, these frequencies are substantially free of use because they are unsuitable for long-range transmission. The use of these frequencies can fulfill a present urgent public need.

DATES: Comments must be received on or before March 7, 1980 and reply comments must be received on or before April 7, 1980.

ADDRESS: Federal Communications Commission, Washington, D.C. 20554.

FOR FURTHER INFORMATION CONTACT: Mr. William P. Berges, Private Radio Bureau, (202) 632-6497.

Adopted: December 19, 1979.

Released: January 2, 1980.

By the Commission:

In the Matter of Amendment of Part 94 of the Commission's Rules and Regulations to facilitate operation of low power, limited coverage systems in the 22,000-23,600 MHz band. PR DOCKET NO. 79-337; RM-3241 Proposed Rule Making.

1. The General Electric Company (GE), Tube Products Department of the Components Business Division, has filed a petition (RM-3241), requesting amendment of Part 94 of the Commission's Rules, to facilitate the operation of a low power, limited coverage system in the 22,000 to 23,600 MHz band.

2. GE states that the frequencies in the 22,000-23,600 MHz band are substantially free of use primarily because they are unsuitable for long-range transmissions. GE also states that

it has designed radio equipment for short haul, low power, inexpensive systems that operate in the band, which can fulfill a present urgent public need. The equipment can be used, according to GE, in traffic control, closed circuit TV, energy monitoring and control, digital voice, transmission of high speed data utilized by the computer industry, and for many other purposes. Datapoint Corporation has filed a statement in support to this petition. Datapoint argues that the GE proposal will offer a needed service to the computer industry, not available at the present time. Farinon Electric recommends that the operating frequencies of the GE proposal should be limited to 22,300–22,400 MHz and 23,500–23,600 MHz only, and to a bandwidth of 25 MHz, but with a 50 MHz bandwidth provision upon adequate showing of need.

3. GE states that the lower microwave bands are heavily used and realistically only the 12,200–12,700 MHz band is available for the type of low power, wide band systems for short haul communications (such as high rate data and closed circuit television transmissions) that GE has in mind. GE further states that even the 12,200–12,700 MHz band is also becoming crowded in many areas and it is being considered for future use by the Operational fixed as well as the Broadcast Satellite Service.[1] Finally, GE argues that the 22,000–23,600 MHz band is suitable for the kind or operations GE proposes and could offer low cost communications because smaller antennas can be used.

4. The 12,200–12,700 MHz band is used extensively and we have proposed to the 1979 WARC that the band be made available for use to the Fixed and to the Broadcast Satellite Services. On the other hand, the 22,000–23,600 MHz band is used sparingly, primarily for developmental purposes. We believe, therefore, that use of this band for the applications described by GE will serve many needs required by the public.

5. Section 94.67 of our Rules authorizes a frequency tolerance of ±0.03% for systems operating in the 22,000 to 27,600 MHz band. Section 94.71 authorizes a maximum bandwidth per channel of 100 MHz in this band. GE requests that the Rules be amended to allow operation in that band with a 50 MHz bandwidth and a ±0.05% tolerance. With some exceptions, the standards proposed by GE are similar to those now applicable to systems operating in the 12,200 to 12,700 MHz band, under § 94.90.

6. We have reviewed GE's petition and it appears that the ±0.05% frequency tolerance it seeks would preclude the transmission of high resolution television within a 50 MHz authorized bandwidth. Our calculations indicate that if a system operates in the superhetrodyne mode, and the transmitter and receiver oscillators of such a system drift in opposite directions, approximately 46 MHz of the IF bandwidth becomes unusable. The proposed 50 MHz bandwidth system can then have a usable bandwidth of only 4 MHz. A 4 MHz bandwidth is, we believe, insufficient for the transmission of high resolution TV signals, but it may be adequate for a lesser quality television. Of course, GE recommends that the band be used for many other applications besides the transmission of TV signals. We are also inclined to believe that technical improvements will reduce the 0.05% frequency tolerance and enable this system to be used for the transmission of better quality TV signals in the future. The proposed 50 MHz bandwidth channels are substantially narrower than the 100 MHz channels authorized in this band in § 94.71 of our Rules. This narrower bandwidth per channel can accommodate a greater number of users in the same frequency spectrum than we previously envisioned, and thus provide potentially wider use of the band. We propose, therefore, that the Rules be amended to permit ±0.05% tolerance and 50 MHz channels.

7. GE also requests that as long as the maximum tandem length of the system does not exceed 25 miles, the maximum number of three hops in tandem authorized under § 94.90 should be increased in the 22,000 to 23,600 MHz band, upon showing of need. In view of the low transmitter output power proposed and considering that in many cases these systems will be used in areas where the signals will be greatly attenuated due to water absorption, street bends and presence of buildings, we see no reason to impose that limitation in this band.

8. GE also proposes that the emission standards prescribed in § 94.71(c)(1) for analog systems should be made applicable to digital systems as well. We have considered this request, and we have come to the conclusion that this exception to our Rules for digital systems will increase substantially the harmful interference caused to adjacent channels. For this reason, we have decided to retain the digital emission criteria described in § 97.71(c)(2) of our Rules. We agree with the GE claim, however, that the cost of greatly suppressing harmonics above 40,000 MHz is very high. We also recognize that the power output of their system is very low. For these reasons, we propose to relax the attenuation requirement for harmonics and spurious signals above 40,000 MHz, as GE requested, from 43 plus 10 $\log_{10}$ (mean output power in watts) decibels to 33 plus 10 $\log_{10}$ (mean output power in watts) decibels.

9. The frequencies in the 22,000–23,600 MHz band are separated in three segments.[2] The 22,400–23,000 MHz segment is assigned primarily to common carriers. The 22,000–22,400 MHz and 23,000–23,600 MHz of the band are designated primarily for operational-fixed uses. The uses proposed by GE are normally authorized in the Private Operational-Fixed Microwave Service and we believe these operations should be confined to the portions of the band earmarked primarily for that Service. Farinon Electric has also proposed that we further limit the standards proposed by GE to the frequency band 22,300–22,400 MHz and 23,500–23,600 MHz, or to two, channel pairs (200 MHz); while we agree that these standards should not be made applicable in the entire band, we believe that the restriction proposed by Farinon will unduly limit the potential usefulness of the proposed systems. For this reason, it would be more appropriate to provide four channel pairs for this purpose (400 MHz). We propose, therefore, to amend the Rules and authorize the technical standards proposed by GE in the frequency band segments of 22,200–22,400 MHz and 23,400–23,600 MHz.

10. Authority for issuance of this Notice is contained in Section 4(i) and 303(r) of the Communications Act of 1934, as amended, 47 U.S.C. 154(i) and 303(r). Pursuant to procedures set out in § 1.415 of the Rules and Regulations, 47 CFR 1.415, interested persons may file comments on or before March 7, 1980, and reply comments on or before April 7, 1980. All relevant and timely comments will be considered by the Commission before final action is taken in this proceeding. In reaching its decision, the Commission may take into consideration information and ideas not contained in the comments, provided that such information or a writing indicating the nature and source of such information is placed in the public file, and provided that the fact of the Commission's reliance on such information is noted in the Report and Order.

11. In accordance with the provisions of § 1.419 of the Rules and Regulations, 47 CFR 1.419, formal participants shall

[1] See e.g., Docket 20271, the WARC Inquiry, Eighth Notice of Inquiry, FCC 78-265, released May 5, 1978, at pgs. 34 and 38-39.

[2] See Section 94.61(b), Note 12.

file an original and 5 copies of their comments and other materials. Participants wishing each Commissioner to have a personal copy of their comments should file an original and 11 copies. Members of the general public who wish to express their interest by participating informally may do so by submitting one copy. All comments are given the same consideration, regardless of the number of copies submitted. All documents will be available for public inspection during regular business hours in the Commission's Public Reference Room at its headquarters in Washington, D.C.

12. For further information concerning this document, you may contact William P. Berges, (202) 632-6497.

Federal Communications Commission.

William J. Tricarico,

Secretary.

Appendix

I. Part 94 of the Commission's Rules is amended as follows:

1. Section 94.61(b) is amended by adding the following to footnote 12:

§ 94.61 Applicability.

* * * * *

(b) * * *

[12] * * * in the appropriate band segments. Frequencies in these bands may be authorized to operational fixed users operating in accordance with § 94.91.

* * * * *

2. Section 94.63 is amended by revising the introductory portion of paragraph(b), and by revising paragraph (d)(3) to read as follows:

§ 94.63 Interference protection criteria for operational-fixed stations.

* * * * *

(b) The interference protection criteria for operational-fixed stations, other than those licensed under the provisions of §§ 94.90 and 94.91 are as follows:

* * * * *

(d) * * *

(3) Except as provided in § 94.90 and § 94.91, where the applicant's * * *.

3. Section 94.67(a) is amended by adding footnote 5 to the tolerance for the frequency band 12,700–40,000 MHz to read as follows:

§ 94.67 Frequency tolerance.

(a) * * *

[5] For exceptions, see § 94.91.

4. Section 94.71 is amended by adding footnote 7 to the maximum authorized bandwidth for the frequency band 21,200–23,600 MHz in paragraph (b), a new subparagraph (iv) to paragraph (c)(1) and paragraph (c)(2) is added to read as follows:

§ 94.71 Emission and bandwidth limitations.

* * * * *

(b) * * *

[7] For exceptions, see § 94.91.

* * * * *

(c) * * *

(1) * * *

(iv) On any frequency above 40,000 MHz, the carrier harmonics of any system operating under the provisions of § 94.91 shall be at least 33 plus 10 $\log_{10}$ (mean output power in watts) decibels or 80 decibels, whichever is the lesser attenuation.

(2) * * *

(iv) On any frequency above 40,000 MHz, the carrier harmonics of any system operating under the provisions of § 94.91 shall be at least 33 plus 10 $\log_{10}$ (mean output power in watts) decibels or 80 decibels, whichever is the lesser attentuation.

* * * * *

5. Section 94.73(a)(1) is amended by adding footnote 2 to maximum transmitter power output for the frequency band 12,200–40,000 MHz, and in § 94.73(a)(2) footnote 5 is amended to read as follows:

§ 94.73 Power limitations.

* * * * *

(a)(1)* * *

[2] Except as provided in § 94.91.

(a)(2) * * *

[5] Except as provided in § 94.90 and § 94.91.

6. Section 94.75(b) is amended by adding footnote 5 to the frequencies "above 12,700 MHz" and adding a new paragraph (h) to read as follows:

§ 94.75 Antenna limitations.

* * * * *

(b) * * *

[5] Except as provided in § 94.91.

* * * * *

(h) Antennas employing circular polarization may be used in operational-fixed systems operating under the provisions of § 94.91. In such cases, antenna polarization shall be defined either as clockwise or counterclockwise, as described in paragraph (c) of this section.

7. A new § 94.91, is added to read as follows:

§ 94.91 Special provisions for low power, limited coverage systems in the band segments 22,200–22,400 and 23,400–23,600 MHz.

Notwithstanding any contrary provisions in this part, low power, limited coverage systems may be authorized in the band segments 22,200–22,400 MHz and 23,400–23,600 MHz, subject to the following conditions:

(a) Maximum effective radiated power (ERP) shall be 55 dBm.

(b) The rated transmitter output power shall not exceed 0.100 watts.

(c) Frequency tolerance shall be maintained to within 0.05 percent of the assigned frequency.

(d) Maximum beamwidth not to exceed 4 degrees. However, the sidelobe suppression criteria contained in § 94.75(b) of this part shall not apply, except that a minimum front-to-back ratio of 38 dB shall apply.

(e) Upon showing of need, a maximum bandwidth of 50 MHz may be authorized per frequency assigned.

(f) Radio systems authorized under the provisions of this section shall have no more than five hops in tandem, except upon showing of need, but in any event the maximum tandem length shall not exceed 40 km. (25 miles).

(g) Interfering signals at the antenna terminals of stations authorized under this section shall not exceed −90 dBm and −70 dBm respectively, for co-channel and adjacent channel interfering signals.

(h) Stations authorized under the provisions of this Section shall provide the protection from interference specified in § 94.63 to stations operating in accordance with the provisions of this part.

(i) Frequency assignment for radio systems authorized under this section shall be in accordance with the provisions described in § 94.65(i).

[FR Doc. 80-812 Filed 1-9-80; 8:45 am]

BILLING CODE 6712-01-M

---

47 CFR Part 97

[Docket No. 20679; FCC 79-859]

Requiring Volunteer Examiners in the Amateur Radio Service To Submit Photocopies of Their Operator License With Their Requests for Examination Papers

AGENCY: Federal Communications Commission.

ACTION: Report and Order.

SUMMARY: This Report and Order terminates a Notice of Proposed Rulemaking which proposed to amend the Amateur Radio Service Rules. The proposed amendment would have required volunteer examiners to submit a photocopy of their own license to the Commission when requesting permission to examine others. This proceeding has been terminated because amendments already adopted by the Commission have made the proposed amendment unnecessary.

EFFECTIVE DATE: Non-Applicable.

ADDRESSES: Federal Communications Commission, 1919 M Street NW., Washington, DC 20554.

FOR FURTHER INFORMATION CONTACT: Judith St. Ledger-Roty, Rules Division, Private Radio Bureau, (202) 634-2443.

Report and Order (Proceeding Terminated)

Adopted: December 19, 1979.

Released: January 7, 1980.

By the Commission:

In the matter of amendment of Part 97 of the Commission's Rules to require volunteer examiners in the Amateur Radio Service to submit photocopies of their operator license with their requests for examination papers.

1. On December 19, 1975, the Commission adopted a *Notice of Proposed Rulemaking* proposing amendment of § 97.29 (which is presently § 97.28) of the Amateur Radio Service Rules. 57 F.C.C. 2d 797 (1976), 40 FR 59602 (1975). At issue was the manner in which the Commission permitted license examinations by mail.

2. At the time the *Notice* was released, the examinations for the Novice, Technician, and Conditional class licenses were conducted by mail. Prospective licensees would select a qualified volunteer examiner who would then conduct the telegraphy portion of the exam for the applicant. If the applicant passed this portion, the volunteer examiner would submit a written request to the Commission for permission to administer the written portion of the examination. In order to qualify as an examiner, the Commission required each volunteer to state that he was 21 years old, and held an amateur license of a class higher than that sought by the applicant. The Commission would then forward the written examination to the volunteer examiner who in turn would administer the exam.

3. By December 1975, the Commission had discovered substantial abuses of this licensing procedure. Volunteer examiners had claimed qualifications they did not possess, and some names submitted as volunteers proved to be fictitous. However, the Commission did not have sufficient resources to verify every volunteer examiners' qualifications.

4. In order to limit abuse, and preserve the integrity and fairness of the mail examination program, the Commission proposed to amend Section 97.29 to require volunteer examiners to submit a photocopy of their amateur license when requesting examination papers. The Commission received five comments, four of which opposed the proposed amendment and suggested that the Commission improve its own internal procedures for verification rather than impose any additional burden on volunteer examiners. One participant pointed out that the added expense to the examiner might well dissuade would-be volunteers from participating in the licensing program. One volunteer examiner who filed comments felt that the need to maintain the integrity of the program outweighed any disadvantage to the examiners.

5. The problem of fraudulently obtained licenses was also, in part, the subject of the *Notice of Proposed Rulemaking in Docket 20282,* 49 F.C.C. 2d 1175 (1974). One of the broad objectives of this docket was to minimize any adverse impact on presently licensed amateurs while at the same time ensuring the vitality of the mail examination processes. *In its First Report and Order,* 59 F.C.C. 2d 877 (1976), the Commission, guided by the views of an estimated 4,000 participants, modified its proposals to assure that no amateur who already held a license would be harmed by new licensing procedures. The procedures adopted in the *First Report and Order* were designed to limit the availability of volunteer-administered examinations to two categories of applicants:

(a) Applicants for the Novice license;[1] and

(b) Applicants who show by a physician's certification that they are unable to appear at a Commission examination point because of a protracted disability preventing travel. 59 F.C.C. 2d at 879.

6. The amendments to the Amateur Rules adopted in the *First Report and Order in Docket 20282* provided a workable alternative to the proposals put forth in this docket. On the basis of these amendments, and the negative public reaction from the amateur community, the Commission believes that the public interest, convenience and necessity is best served by the termination of this proceeding. Accordingly, by authority contained in Sections 4(i) and 303(r) of the Communications Act of 1934, as amended, IT IS ORDERED that this proceeding is TERMINATED.

Federal Communications Commission.

William J. Tricarico,

Secretary.

[FR Doc. 80-831 Filed 1-9-80; 8:45 am]

BILLING CODE 6712-01-M

[1] The Commission placed no restrictions on the Novice Class applicant because there is little incentive for that class to cheat. The examination for the Novice Class license is simpler than the examination for other amateur operator licenses.

Notices

Federal Register
Vol. 45, No. 7
Thursday, January 10, 1980

This section of the FEDERAL REGISTER contains documents other than rules or proposed rules that are applicable to the public. Notices of hearings and investigations, committee meetings, agency decisions and rulings, delegations of authority, filing of petitions and applications and agency statements of organization and functions are examples of documents appearing in this section.

ADMINISTRATIVE CONFERENCE OF THE UNITED STATES

Forum on Improving the Regulatory Process

In accordance with its statutory mandate to arrange for the interchange of information potentially usefully in improving administrative procedure, 5 U.S.C. §§ 571–575, the Administrative Conference will be sponsoring a third session of its Forum on Improving the Regulatory Process. This session will be held on January 21, 1980 at 2:00 p.m. in the (sixth floor) Bank Board Room, Federal Home Loan Bank Board, 1700 G Street, N.W., Washington, D.C.

Invited to participate in the Forum will be officials from the Administration, bar, business community, labor, and citizen groups, as well as the Council of the Administrative Conference. Invited participants will discuss the implementation of Executive Order 12044 on Improving Government Regulations, with special emphasis on the Regulatory Analysis Review Group and the Environmental Protection Agency's regulatory reform initiatives.

The forum will be open to the public (space permitting), but participation is restricted to invited participants.

Persons wishing to attend or persons seeking further information should contact Jeffrey Lubbers, 254–7065.

Richard K. Berg,
Executive Secretary.
January 4, 1980.
[FR Doc. 80-703 Filed 1-9-80; 8:45 am]
BILLING CODE 6110-01-M

DEPARTMENT OF AGRICULTURE

Forest Service

Lewis and Clark National Forest Grazing Advisory Board; Meeting

The Lewis and Clark National Forest Grazing Advisory Board will meet at 1:00 p.m., on Tuesday, March 4, 1980, at the Ponderosa Inn (Bonanza West Room), Great Falls, Montana.

The purpose of the meeting is to review the Lewis and Clark National Forest's range management program for fiscal year 1980, and tentative programs for FY 81–82. The Forest Service will provide specific information on their priorities for range analysis/plans and for range improvement construction for these fiscal years. There will be opportunity for the Board to offer advice and make recommendations to the Forest Supervisor on the Forest Service tentative plans.

An open discussion will also be held on topics of interest to the Advisory Board.

The meeting will be open to the public. Persons who wish to attend should notify George McCafferty, Chairman of the Board, 409a 46th Street South, Great Falls, MT 59405, telephone 452–0603, or, Darrol L. Harrison, Lewis and Clark National Forest, Box 871, Great Falls, MT 59403, telephone 453–7678. Written statements may be filed with Board before or after the meeting.

The Board has established the following rule for public participation: A person must be recognized by the Chair before addressing the Board.

Dated: January 2, 1980.

Kenneth D. Weyers,
Forest Supervisor, Lewis and Clark National Forest.
[FR Doc. 80-770 Filed 1-9-80; 8:45 am]
BILLING CODE 3410-11-M

CIVIL AERONAUTICS BOARD

[Order 79-12-209; Docket 37295]

Braniff Airways, Inc., and Compagnie Nationale Air France; Transatlantic Fare increases Order of Suspension and Investigation

Adopted by the Civil Aeronautics Board at its office in Washington, D.C. on the 20th day of December, 1979.

By tariff revisions filed for effectiveness January 1, 1980, Braniff Airways, Inc. (Braniff), proposes an across-the-board 7 percent increase in transatlantic fares. In addition, Compagnie Nationale Air France (Air France) has filed tariffs proposing a general 7 percent increase in U.S.-France fares, effective January 20, 1980.[1]

In justification of its proposal, Braniff states that the increase is necessitated by the constantly escalating price of jet fuel, which represents the industry's largest commodity expense item;[2] it has chosen an across-the-board increase in the belief that all travelers must share equally in bearing the higher cost of fuel; and it projects its transatlantic return on investment with and without the increases to be –10.9 and –15.5 percent, respectively, for the year ending December 31, 1980. Air France also states that the increases are necessary because of increasing fuel costs.

We have decided to permit both carriers' proposed fare increases to take effect, with the exception of U.S.-France normal economy fares, which we will suspend.

In Order 79–12–60, December 3, 1979, we largely approved an earlier carrier proposal for a 7 percent increase in many transatlantic markets.[3] As we stated there, rising fuel costs have unquestionably made some fare increases necessary, and 7 percent increase in transatlantic fares is, in general, reasonable.

Nevertheless, we do not believe that the proposed increases in U.S.-France normal economy fares are warranted. While many other transatlantic markets now feature unbundled normal economy fares as an alternative for the on-demand, point-to-point traveler, U.S.-France markets do not. On-demand U.S.-France travelers who neither need nor use certain services (e.g., "free" stopovers and circuity allowances) must still pay a fare which reflects them. Braniff proposes basic-season Boston-Paris and Dallas-Paris levels of 10.9 and 10.8 cents per mile, respectively; Air France proposes a basic-season New York-Paris level of 10.7 cents per mile. These levels are considerably above those available for point-to-point service in other transatlantic markets. For example, unbundled basic-season levels from New York to London, Frankfurt and Rome are currently 9.7, 9.8, and 9.9 cents per mile, respectively. In these

[1] Braniff's increase would apply to both peak- and basic-season levels; Air France's proposal pertains only to basic-season levels.

[2] Braniff expects fuel to comprise over 33 percent of its total operating expenses during calendar year 1980.

[3] That proposal, however, did not include any increases in U.S.-France normal economy fares.

circumstances, we cannot permit the proposed U.S.-France normal economy fare increases to take effect.

Accordingly, pursuant to sections 102, 204(a), 403, 801 and 1002(j) of the Federal Aviation Act of 1958, as amended:

1. We shall institute an investigation to determine whether the fares and provisions set forth in Appendices A and B hereof, and rules and regulations or practice affecting such fares and provisions, are or will be unjust or unreasonably, unjustly discriminatory, unduly preferential, unduly prejudicial or otherwise unlawful; and if we find them to be unlawful, to act appropriately to prevent the use of such fares, provisions or rules, regulations or practices;

2. Pending hearing and decision by the Board, we hereby suspend the tariff provisions specified in Appendix A and defer their use from January 1, 1980, to and including December 31, 1980, and suspend the tariff provisions specified in Appendix B and defer their use from January 20, 1980, to and including January 19, 1981, unless otherwise ordered by the Board, and shall permit no changes to be made therein during the period of suspension except by order or special permission of the Board;

3. We shall submit this order to the President [4] and it shall become effective on January 1, 1980, with respect to the tariff provisions in Appendix A, and January 20, 1980, with respect to the tariff provisions in Appendix B; and

4. We shall file copies of this order in the aforesaid tariff and serve them upon Braniff Airways, Inc., and Compagnie Nationale Air France.

We shall publish this order in the **Federal Register.**

By the Civil Aeronatics Board:

Phyllis T. Kaylor,

Secretary.

All Members concurred and Member Schaffer filed the attached concurring statement.

Schaffer, Member, Concurring: On several occasions during the past year I have dissented from Board decisions which have had the effect of suspending increases in normal economy fares while allowing increases in discount and promotional fares in international markets (see Orders 79-10-34, 79-9-31, 79-8-2 and 79-5-218). My objection to those decisions was based on a belief that the Board should not inhibit carrier management flexibility to adjust fare differentials during periods of extreme and rapidly escalating costs.

The basic premise for the Board's policy in these international fare matters was the belief that many international normal economy fares were abnormally high and that the fares generally required the passenger to pay for numerous "bundled" services without offering any less expensive alternative.

To a great extent the Board's approach has been successful. First, an increased measure of fare competition has developed in international markets stimulated primarily by our successful negotiation of liberal pricing regimes with some of our major trading partners. Pan American and now other carriers have introduced "unbundled" fare packages which afford passengers a choice between true point-to-point service and other fare options containing more generous stop-over provisions and circuity allowances. Also, I fully expect that the Congress, in the pending international aviation reform legislation, will give us guidance on the standards to apply in evaluating requests for international fare increases in the future. Finally, it may no longer be true that normal economy fares in many international markets are abnormally high.

Thus, while I remain opposed to this particular kind of regulatory tinkering in the international fare area, I am now content to participate in Board fare decisions that hold the line on normal economy fare increases in restricted markets where there is evidence—as there is in this case—that normal economy fares are excessive. In these circumstances, I concur in the suspensions of the Braniff and Air France fares here in issue

Gloria Schaffer

Appendix A

Transatlantic Passenger Fares Tariff No. A-1, C.A.B. No. 71, Issued by Air Tariffs Corp., Agent

Supplement No. 43, insofar as it would increase all Normal Economy Class (YL and YH) Fares between points in the United States and France.

Appendix B

Transatlantic Passenger Fares Tariff No. A-1, C.A.B. No. 71, Issued by Air Tariffs Corp., Agent

All increased Basic Normal Economy Class Fares (YL):

on 16th Revised Page 473 between New York, N.Y., and Lyon, France;

on 16th Revised Page 474 between New York, N.Y., and Nice, France;

on 15th Revised Page 474-A between New York, N.Y., and Paris, France.

[FR Doc. 80-785 Filed 1-9-80; 8:45 am]

BILLING CODE 6320-01-M

[4] We submitted this order to the President on December 21, 1979.

[Dockets 33362, 35525, and 35526]

Former Large Irregular Air Service Investigation Phase II; Applications of Intercontinental Airways; Notice of Hearing

Notice is hereby given, pursuant to the Federal Aviation Act of 1958, as amended, that a hearing in the above-entitled proceeding is assigned to be held on January 23, 1980, at 9:30 a.m. (local time) in Room 1003, Hearing Room B, Universal North Building, 1875 Connecticut Avenue, NW., Washington, D.C., before the undersigned.

Dated at Washington, D.C., January 3, 1980.

Joseph J. Saunders,

Chief Administrative Law Judge.

[FR Doc. 80-783 Filed 1-9-80; 8:45 am]

BILLING CODE 6320-01-M

[Order 79-12-211; Docket 37256]

Increases in South Pacific Fares Proposed by Air New Zealand, Ltd.; Order of Suspension and Investigation

Adopted by the Civil Aeronautics Board at its office in Washington, D.C. on the 13th day of December, 1979.

By tariff revisions filed November 1, 1979, Air New Zealand, Ltd. proposes increases of 5-10 percent in most South Pacific fares, effective January 1, 1980 (December 1, 1979 from New Zealand), to compensate for continued increases in fuel costs.[1]

We have decided to suspend Air New Zealand's proposed normal economy fare (NEF) increases for travel between the United States, on the one hand, and French Polynesia and New Caledonia, on the other.

While the carrier's proposed NEF levels for other Pacific points do not appear unreasonable considering the availability of partially unbundled, no-stopover NEF's as well as the levels of NEF's offered by other carriers and, therefore, will not be suspended, the same cannot be said for its proposed NEF's to Papeete and Noumea. In these two markets, the on-demand, point-to-point passenger is not afforded a viable fare option, such as a point-to-point NEF, which does not require him to pay for stopover and circuity privileges he does not need. Where such options are available, fares for both on-demand, point-to-point passengers and passengers wishing to use built-in stopover and circuity privileges are much lower. To illustrate this point, Air New Zealand's Los Angeles-Auckland stopover and no-stopover NEF's equal about 10.6 and 9.8 cents per mile, respectively, compared with its proposed Los Angeles-Papeete bundled NEF of almost 14.8 cents per mile. Even the existing Los Angeles-Papeete NEF, at 13.5 cents per mile, is quite high compared to U.S.-New Zealand fares.

In these circumstances, we will suspend, pending investigation, Air New Zealand's proposed NEF's for travel between U.S. points and Noumea and Papeete. We are aware, of course, of the carriers' needs for additional revenue to

[1] Tariff C.A.B. No. 67, Air Tariffs Corporation, Agent.

offset sharp fuel price increases, and have been permissive with respect to carrier requests to increase both first class and promotional fares in South Pacific markets. But, in markets such as French Polynesia and New Caledonia, we believe these fares are already sufficiently high for the provision of good service at a fair profit.

Accordingly pursuant to sections 102, 204(a), 403, 801 and 1002(j) of the Federal Aviation Act, as amended:

1. We institute an investigation to determine whether the provisions set forth in Appendix A hereof, and rules and regulations or practices affecting such provisions, are or will be unjust, unreasonable, unjustly discriminatory, unduly preferential, unduly prejudicial or otherwise unlawful; and if we find them to be unlawful, to act appropriately to prevent the use of such fares, provisions or rules, regulations, or practices;

2. Pending hearing and decision by the Board, we suspend the tariff provisions specified in Appendix A and defer their use from January 1, 1980, to and including December 31, 1980, unless otherwise ordered by the Board, and shall permit no changes to be made therein during the period of suspension except by order or special permission of the Board;

3. We shall submit this order to the President [2] and it shall become effective on January 1, 1980; and

4. We shall file a copy of this order in the aforesaid tariffs and serve it on Air New Zealand, Ltd.

We shall publish this order in the Federal Register.

By the Civil Aeronautics Board.

Phyllis T. Kaylor,

Secretary.

All Members concurred.

Appendix A

Transpacific Passenger Fares Tariff No. 1, C.A.B. No. 67, Issued by Air Tariffs Corp., Agent

The increased "Y" class fares between points in the United States, on the one hand, and Noumea and Papeete, on the other hand, on the following pages:

36th Revised Page 142.
12th Revised Page 142–C.
10th Revised Page 142–G.

[FR Doc. 80-786 Filed 1-9-80; 8:45 am]

BILLING CODE 6320-01-M

[2] We submitted this order to the President on December 18, 1979.

[Docket 37020]

Intra-Alaska Service Investigation; Notice Cancelling Prehearing Conference

Notice is hereby given that the prehearing conference, and alternatively the hearing, now scheduled for January 8, 1980 (44 FR 70860 December 10, 1979) is hereby cancelled.

The foregoing cancellation is a consequence of the Board's Order (Order 80–1–1) which stayed the effect of its Order 79–11–15 instituting this proceeding. The Stay Order effectively removes this proceeding from the hearing forum back to the Board for its further consideration.

As a consequence of the foregoing, no further action by the parties in preparation for the prehearing conference or the hearing itself is required until such time as the Board shall have undertaken some further action in the premise.

Dated at Washington, D.C., January 4, 1980.

Richard M. Hartsock,

Administrative Law Judge.

[FR Doc. 80-782 Filed 1-9-80; 8:45 am]

BILLING CODE 6320-01-M

Societe Anonyme Belge D'Exploitation De La Navigation Aerienne (SABENA); Notice of Application and opportunity to object

AGENCY: Civil Aeronautics Board.

ACTION: Notice of application and opportunity to object.

SUMMARY: The Board has received the following application:

Applicant: Societe Anonyme Belge D'Exploitation De La Navigation Aerienne (SABENA).

Application Date: December 21, 1979; Docket: 37306.

Authority Sought: Amendment of its foreign air carrier permit to add Detroit, Michigan and Chicago, Illinois for Brussels service beginning April 6, 1980 and August 1980, respectively. The Government of Belgium has designated this carrier and these U.S. points pursuant to the December 14, 1978 Protocol between the United States and Belgium.

OBJECTIONS: All interested persons having objections to award of this authority by the Board should file a statement of such objections NO LATER THAN January 28, 1980 with the Civil Aeronautics Board (20 copies) and mail copies to the applicant, the Department of Transportation, the Department of State, and the Ambassador of the Kingdom of Belgium. A statement of objections must cite the document number and must include a summary of testimony, statistical data, or other such supporting evidence.

This constitutes the notice and filing opportunity provided by Section 402 (d) and (h) of the Federal Aviation Act of 1958, as amended. If no objections are filed, the Board will process the application by expedited procedures as provided in Subpart Q of Part 302 of its Rules of Practice. Such procedures may consist of the adoption of a final Board Order, its submission to the President for review under section 801(a) of the Act, and the subsequent issuance by the Board of the requested foreign air carrier permit.

ADDRESSES FOR OBJECTIONS: Civil Aeronautics Board—Docket 37306, Docket Section, Civil Aeronautics Board, Washington, D.C. 20428. Applicant—Ronald H. Cohen, Attorney for SABENA, 720 Fifth Avenue, New York, New York 10019.

To get a copy of the complete application request it from the applicant at the above address.

FOR FURTHER INFORMATION CONTACT: Ms. Eleanor Markham, Regulatory Affairs Division, Bureau of International Aviation, Civil Aeronautics Board; (202) 673–5134.

Phyllis T. Kaylor,

Secretary.

[FR Doc. 80-738 Filed 1-9-80; 8:45 am]

BILLING CODE 6320-01-M

[Order 79-12-131; Dockets 37298 and 31290]

United Air Lines, Inc.; Increased Intrastate California Fares and Waiver of § 399.33 of the Board's Policy Regulations Concerning Intrastate California Fares

Adopted by the Civil Aeronautics Board at its office in Washington, D.C. on the 20th day of December, 1979.

Regulation PS–82, 44 FR 9940, February 15, 1979, contains the Board's policy on intrastate fare levels. That policy statement, which amends § 399.33 of the Board's Statement of General Policy, required the gradual reduction of the difference between intrastate and interstate fare ceilings. In PS–82, we permitted carriers to increase intrastate fares in California, Florida, and Texas, first by 10 percent, and then by 8 percent each on July 1, 1979, January 1, 1980, July 1, 1980, and January 1, 1981, at which time intrastate ceiling levels will be permitted to reach the interstate level if they had not already. Those increases were to be in addition to those permitted interstate fares because of increases in airline operating expenses.

By tariff revisions [1] filed November 21, 1979, and marked to become effective January 20, 1980, United proposes to accelerate the equalization of intrastate fares in California and interstate fares. The carrier proposes to increase its intrastate California rates by varying percentages, ranging between 5 and 41 percent and averaging 25 percent. Those increases would replace the 8 percent increase scheduled under PS–82 for January 1, 1980.

In support of its proposal United asserts, among other things that: the fare increase is fully justified, the PS–82 policy appeared logical in early 1979, but the subsequent turbulent increases in the last six months indicate that the equalization must be accelerated; rapidly rising costs and particularly the unprecedented increase in the price of fuel have hindered the carriers' ability to continue to cross-subsidize uneconomic intrastate fares; when PS–82 was adopted, the Board's phased approach to fare equalization was tolerable, considering its knowledge of recent airline operating profits—today, there is a greater need to eliminate unprofitable operations; an economic evaluation of routes within California has left management with the conclusion that intrastate fares must be priced at remunerative levels and costly services must be pared; it estimates that this filing will increase annual intrastate revenues by about $8 million; although more rapid equalization of California fares conflicts with the timetable established under PS–82, it will allow these markets to become competitive more quickly; the Board's continued maintenance of low, uneconomic, intrastate fares, by itself, may be a deterrent to the new competition the Board desires to foster; because of the low intrastate fares, a potential entrant is forced to compete at an uneconomic fare level or operate at a higher fare and competitive price disadvantage relative to the incumbent; in cases where a new carrier enters a market at a higher, more nearly remunerative fare, it permanently brands itself in the market as a high-cost carrier relative to the incumbent and this is a poor way to begin competitive, or replacement, service; the Board found that the interstate level is just and reasonable; and a quick transition will increase profitability and competition and more rapidly result in the achievement of the long-term marketplace objectives of the Board.

We have concluded that the proposed fare increases may be unjust, unreasonable, unjustly discriminatory, unduly preferential, unduly prejudicial, or otherwise unlawful, and should be investigated; we further conclude that they should be suspended pending investigation.

As stated above, United's proposal would result in increases averaging 25 percent, replacing the 8 percent increase permitted by PS–82 on January 1, 1980. The increases which range between 5 and 41 percent (not less than 10 percent, except in a few markets) would typically exceed significantly the 8 percent permitted by PS–82 on January 1, 1980. We believe that the proposed increases would generally be too big a fare jump at one time and would result in an undue burden upon the traveling public.

The issue arises from the fact that State regulation held fares below the prevailing interstate levels in these markets. In PS–82 we adopted a gradual phase-in period to eliminate disparities in fare ceilings. We believed that a phased-in approach was desirable to prevent abrupt changes in "intrastate" fare levels that would work against a smooth, orderly transition from one set of standards, imposed by the individual States, to our own. United's justification has not changed our belief that gradualism is desirable, although it does cause us to question whether we ought to introduce more flexibility in our policies.

We believe that increases of the magnitude proposed by United, up to 41 percent, with many in the 25–30 percent range, represent too abrupt a fare change. That is not to say that we are impervious to United's financial difficulties in California or to the serious service problems which we are dealing with in other contexts. On the other hand, United does not represent that it will improve service if its request is granted, and has made no showing that the hypothetical service benefits resulting from approval of its request are worth the very tangible costs to consumers of such large fare increases during the last year of the PS–82 transition period. We will, therefore, suspend its package.

Lest there be any uncertainty as to our determination to protect consumer's interest in good service, we state now our intention to seriously consider, in the PS–82 rulemaking, which is ripe for decision, a shortening of the transition period to end on July 1, 1980. Moreover, we encourage exemption requests from those prepared to serve markets which have recently experienced service problems, at fares within the general domestic zone of reasonableness, or even higher if justified. Finally, in recognition of its own deteriorated financial results from California operations, we would entertain a new, less-extreme filing from United for effectiveness on less than statutory notice. We would expect 20 percent increases as the maximum consumers ought to bear at this time, in the absence of additional comments on this modification of PS–82. For this reason we are issuing a Notice requesting comments on additional acceleration of PS–82.

United requests a waiver from the provisions of § 399.33 of the Board's regulations, because the increases would exceed the permissible levels of that regulation. That section, however, does not prohibit such increases, but states that they would be suspended if not justified. Consequently, no waiver is required and we are dismissing United's application.

Accordingly, pursuant to the Federal Aviation Act of 1958, and particularly sections 204(a), 403, 404, and 1002,

1. We institute an investigation to determine whether the fares and provisions in Tariff C.A.B. No. 259, Supplement No. 374, issued by Airline Tariff Publishing Company, Agent, and rules, regulations, and practices affecting such fares and provisions are or will be unjust, unreasonable, unjustly discriminatory, unduly preferential, unduly prejudicial, or otherwise unlawful, and, if found to be unlawful, to determine and prescribe the lawful fares and provisions, rules, regulations, or practices affecting such fares and provisions;

2. Pending hearing and decision by the Board, we suspend the fares described in paragraph 1 above and their use is deferred to and including April 18, 1980, unless otherwise order by the Board, and no changes shall be made therein during the period of suspension except by order or special permission of the Board;

3. We deny the application of United Air Lines, Inc., in Docket 31290 for a waiver of § 399.33 of the Board's Regulations; and

4. We shall serve a copy of this order with the tariff and serve it on United Air Lines, Inc.

This order will be published in the **Federal Register.**

By the Civil Aeronautics Board: All Members concurred.

Phyllis T. Kaylor,

Secretary.

[FR Doc. 80-784 Filed 1-9-80; 8:45 am]

BILLING CODE 6320-01-M

[1] Revisions to Tariff C.A.B. 259 issued by Airline Tariff Publishing Co., Agent.

Wichita-Tulsa Show-Cause Proceeding

AGENCY: Civil Aeronautics Board.

ACTION: Notice of Order 80-1-32, *Wichita-Tulsa Show-Cause Proceeding*, Docket 37397.

SUMMARY: The Board is proposing to grant Wichita-Tulsa nonstop authority to Frontier Airlines and any other fit, willing and able applicant whose fitness can be established by officially noticeable data. The complete text of this order is available as noted below.

DATES: Objections: All interested persons having objections to the Board issuing the proposed authority shall file, and serve upon all persons listed below, no later than February 13, 1980, a statement of objections together with a summary of the testimony, statistical data, and other material expected to be relied upon to support the stated objections.

Additional Data: All existing and further applicants who have not filed (a) illustrative service proposals, (b) environmental evaluations, and (c) estimates of fuel to be consumed in the first year and a statement as to the availability of fuel are directed to do so no later than January 29, 1980.

ADDRESSES: Objections or Additional Data should be filed in Docket 37397, Docket Section, Civil Aeronautics Board, 1825 Connecticut Avenue, NW., Washington, D.C. 20428.

FOR FURTHER INFORMATION CONTACT: James F. Adley, Bureau of Domestic Aviation, Civil Aeronautics Board, 1825 Connecticut Avenue, NW., Washington, D.C. 20428, (202) 673-5412.

SUPPLEMENTARY INFORMATION: Objections should be served upon Frontier Airlines; Continental Air Lines; Air Midwest, Inc.; the Tulsa Parties; the Governors of Kansas and Oklahoma; the Mayors of Wichita and Tulsa; the Kansas Department of Transportation; the Oklahoma Aeronautics Commission; and the Managers of the Mid-Continental Airport and the Tulsa International Airport.

The complete text of Order 80-1-32 is available from our Distribution Section, Room 516, 1825 Connecticut Avenue NW., Washington, D.C. 20428. Persons outside the metropolitan area may send a postcard request for Order 80-1-32 to that address.

By the Bureau of Domestic Aviation:
January 4, 1980.

Phyllis T. Kaylor,

Secretary.

[FR Doc. 80-787 Filed 1-9-80; 8:45 am]

BILLING CODE 6320-01-M

DEPARTMENT OF COMMERCE

Foreign-Trade Zones Board

[Docket No. 1-80]

Proposed Foreign-Trade Zone—Panama City, Fla.; Application and Public Hearing

Notice is hereby given that an application has been submitted to the Foreign-Trade Zones Board (the Board) by the Panama City Port Authority (Port Authority), a Florida municipal corporation, requesting authority to establish a general-purpose foreign-trade zone at the port complex and industrial park of Port Panama City, within the Panama City Customs port of entry. The application was submitted pursuant to the provisions of the Foreign-Trade Zones Act of 1934, as amended (19 U.S.C. Section 81a-81u), and the regulations of the Board (15 CFR Part 400). It was formally filed on January 4, 1980. The Port Authority is authorized to make this proposal under §§ 288.35-288.38 of the Florida Statutes of 1977.

The proposal calls for the establishment of a foreign-trade zone of 15.9 acres within the 120-acre port facility adjacent to the west shipping berth on St. Andrew Bay on the Gulf of Mexico intra-coastal waterway. Consisting of contiguous tracts of 2.4 and 13.5 acres, the sites are owned by the City of Panama City and are under a long-term lease to the applicant which will also operate the zone.

The smaller tract is undeveloped land on which a general-purpose storage/processing facility will be constructed as zone use materializes. The applicant is actively soliciting users for this site.

A large diameter steel pipe plant is under construction by the Berg Steel Pipe Corporation (BSPC), a Delaware corporation, on the 13.5 acre tract. It is scheduled to be operational by Spring of 1980 to produce steel pipe of 40 foot lengths, ranging in outer diameters from 20 to 64 inches and plate thicknesses of .25 to 1.5 inches, by a rolling process from a mix of domestic and imported steel plate.

BSPC indicates that the larger-sized pipe with outer diameters exceeding 48 inches and thicknesses greater than one inch is not available domestically, and its use of zone procedures will enable an expansion in production capacity because its process favors the production of pipe of this size. It is estimated that approximately 122,000 metric tons of large-diameter pipe could be produced per year at the facility, about 70 percent of which will be sold domestically and the remainder exported. Up to 200 jobs are expected to be created at the new facility.

In accordance with the Board's regulations, an Examiners Committee has been appointed to investigate the application and report thereon to the Board. The Committee consists of: Hugh J. Dolan, Chairman, Office of the Secretary, U.S. Department of Commerce, 14th and E Streets, NW, Washington, D.C. 20230; Harvey L. Perry, District Director, U.S. Customs District Mobile, P.O. Box 2748, Mobile, Alabama 36601; and Colonel Robert H. Ryan, District Engineer, U.S. Army Engineer District Mobile, P.O. Box 2288, Mobile, Alabama 36628.

As part of its investigation of the proposal, the Examiners Committee will hold a public hearing on February 12, 1980, beginning at 9:00 a.m. in the Marine Trade Center of the Panama City Port Authority, 5321 West Highway 98, Panama City, Florida 32401. The purpose of the hearing is to help inform interested persons about the proposal, to provide an opportunity for their expression of views, and to obtain information useful to the examiners.

Interested persons or their representatives are invited to present their views at the hearing. They should notify the Board's Executive Secretary by February 5 of their desire to be heard in writing at the address below or by phone (202) 377-2862. In lieu of an oral presentation, written statements may be submitted in accordance with the Board's regulations to the Examiners Committee, care of the Executive Secretary, at any time from the date of this notice through March 13, 1980. Evidence submitted during the post-hearing period is not desired unless it is clearly shown that the matter is new and material and that there are good reasons why it could not be presented at the hearing.

A copy of the application and accompanying exhibits will be available for public inspection during the comment period at each of the following locations:

Office of the Port Director, U.S. Customs Service, James H. Moore Bldg., Room 2121, 30 W. Government Street, Panama City, Florida 32401

Office of the Executive Secretary, Foreign-Trade Zones Board, U.S. Department of Commerce, Room 6886-B, Washington, D.C. 20230

Dated: January 7, 1980.

John J. Da Ponte, Jr.,

Executive Secretary, Foreign-Trade Zones Board.

[FR Doc. 80-630 Filed 1-9-80; 8:45 am]

BILLING CODE 3510-25-M

National Oceanic and Atmospheric Administration (NOAA)

Intent To Conduct a Scoping Meeting and Prepare an Environmental Impact Statement on a Proposed Marine Sanctuary, Gray's Reef, Ga.

AGENCY: Office of Coastal Zone Management (OCZM), National Oceanic and Atmospheric Administration, Department of Commerce.

ACTION: Notice.

SUMMARY: The Office of Coastal Zone Management (OCZM), National Oceanic and Atmospheric Administration (NOAA), intends to conduct a scoping meeting January 15, 1980, and prepare a draft environmental impact statement (DEIS) on a proposed marine sanctuary at Gray's Reef off the coast of Georgia in accordance with rules and regulations for the designation and management of marine sanctuaries (FR Vol. 44, No. 148, Tuesday, July 31, 1979). The action would protect and manage approximately 12 square miles of important marine habitat, including live bottom coral areas approximately 18 miles off the coast of Georgia.

DISCUSSION: The marine sanctuary proposal is currently being developed in consultation with the State of Georgia, Federal agencies and affected public groups. Public workshops were held on the proposal November 19 and 20, 1979, in Brunswick and Savannah, Georgia, respectively.

A scoping meeting will be held January 15, 1980, at 10:00 a.m. at the Office of Coastal Zone Management, Page Building #1, Navy Conference Room, 2001 Wisconsin Ave., N.W., Washington, D.C. 20235. Interested parties who wish to submit suggestions, comments, or substantive information concerning the scope or content of this proposed environmental impact statement are invited to attend. Parties who wish to respond in writing should do so by January 25, 1980. The DEIS will be prepared in compliance with the Council on Environmental Quality (CEQ) regulations (FR, Vol. 43, November 29, 1978).

Comments may be submitted in writing or by telephone to: Dr. Nancy Foster, Deputy Director, Sanctuary Programs Office (202/634-4236), Office of Coastal Zone Management, NOAA, 3300 Whitehaven Street, N.W., Washington, D.C. 20235.

For further information contact: JoAnn Chandler, Acting Director, or Dr. Nancy Foster, Deputy Director, Sanctuary Programs Office, Office of Coastal Zone Management, 3300 Whitehaven Street, N.W., Washington, D.C. 20235.

Dated: January 2, 1980.

Francis J. Balint,

Acting Director, Office of Management and Computer Systems.

[FR Doc. 80-704 Filed 1-9-80; 8:45 am]

BILLING CODE 3510-08-M

DEPARTMENT OF DEFENSE

Corps of Engineers, Department of the Army

Intent to Prepare a Draft Environmental Impact Statement (DEIS) for the Proposed Maintenance of the Hurricane Protection and Beach Erosion Control Project at Wrightsville Beach, N.C.

AGENCY: U.S. Army Corps of Engineers, DOD.

ACTION: Notice of Intent to Prepare a Draft Environmental Impact Statement (DEIS).

SUMMARY: 1. The proposed action consists of restoring the existing Federally authorized hurricane protection and beach erosion control project at Wrightsville Beach, NC, with fill material to be taken from Banks Channel, Masonboro Channel and other sources in the vicinity of Masonboro Inlet. Material will be taken from the borrow sources by pipeline dredge, deposited on the beach and shaped using heavy equipment. Work is currently scheduled to commence in the summer of 1980.

2. Alternatives to the proposed action include obtaining borrow material in areas further removed from Masonboro Inlet, performing the work at a different time of the year, and no action.

3. Telephone coordination with State and Federal agencies has clearly defined potential resource use conflicts. Coordination indicates that environmental impacts are not expected to be severe and that an environmental assessment and finding of no significant impact (FONSI) may be appropriate if important wetlands can be avoided. The Wilmington District Corps of Engineers reserves the right to use this option.

a. A public meeting was held in April 1978 to solicit viewpoints of all interested individuals and organizations. Also, everyone will have an opportunity to comment on the DEIS or environmental assessment. All additional agencies, organizations and interested parties not previously notified will be invited to comment via a 404(b) Public Notice.

b. The significant issues to be analyzed in the DEIS or Environmental Assessment are (1) selection of borrow areas and the impacts of the use of any given site will have on the fishes and benthos of the project area; and (2) the time of year in which the work will take place and the attendant impacts on tourism, recreation and natural resources.

c. Due to the accelerated schedule currently planned for DEIS or environmental assessment formulation input from other agencies, organizations and individuals will necessarily be limited to telephone contact and document review.

d. The Corps is currently preparing (1) a biological assessment on endangered and threatened species as required under section 7(c) of the Endangered Species Act of 1973, as amended; (2) a consistency determination as required by the Coastal Area Management Act; and (3) a 401 Certification request and 404(b) analysis as required by the Clean Water Act of 1977. The 404(b) analysis will be circulated with the Public Notice for the project.

4. No formal scoping meeting will be held for the project.

5. The DEIS will be made available to the public in March 1980. If the environmental assessment option is selected, it will be made available in January 1980.

ADDRESS: Questions about the proposed action can be answered by: Richard Jackson, Environmental Resources Branch, U.S. Army Engineer District, Wilmington, PO Box 1890, Wilmington, N.C. 28402 (919-343-4746 or FTS 671-4746).

Dated: January 4, 1980.

Adolph A. Hight,

Colonel, Corps of Engineers, District Engineer.

[FR Doc. 80-705 Filed 1-9-80; 8:45 am]

BILLING CODE 3710-GN

DEPARTMENT OF ENERGY

Exxon Co.; Action Taken on Consent Order

AGENCY: Department of Energy.

ACTION: Adoption of Proposed Consent Order as Final.

Pursuant to 10 CFR 205.199J, the Office of Special Counsel for Compliance (OSC) of the Economic Regulatory Administration (ERA) of the Department of Energy (DOE) hereby gives notice of final action taken on a Consent Order. Under the terms of 10 CFR 205.199J(c), no Consent Order involving sums in excess of $500,000 shall become effective until DOE publishes notice of its execution and solicits and considers public comments with respect to its terms. On October 16, 1979, DOE

published Notice of a Consent Order which was executed between Exxon Company, U.S.A. and DOE (44 FR 59586, October 16, 1979). With that Notice and in accordance with 10 CFR 205.199J(c), DOE invited interested persons to comment on the Consent Order.

The only comment received by DOE with respect to the Consent Order concerned refunds to the public in lieu of adjustment by Exxon Company, U.S.A. to its "bank" of unrecovered increased costs. After giving due consideration to the comment received, DOE has concluded that the Consent Order as executed between DOE and Exxon Company, U.S.A. is an appropriate resolution of the compliance proceedings described in the Notice published on October 16, 1979, and hereby gives notice that the Consent Order shall become effective as proposed, without modification, upon publication of this Notice in the Federal Register.

Issued in Washington, D.C., on January 4, 1980.

Paul L. Bloom,

Special Counsel for Compliance.

[FR Doc. 80-740 Filed 1-9-80; 8:45 am]

BILLING CODE 6450-01-M

[Case No. 630R00190]

Exxon Co., U.S.A.; Action Taken on Consent Order

Pursuant to 10 CFR 205.199J, the Office of Special Counsel for Compliance (OSC) of the Economic Regulatory Administration (ERA) of the Department of Energy (DOE) hereby gives notice of final action taken on a Consent Order. Under the terms of 10 CFR 205.199J(c), no Consent Order involving sums in excess of $500,000 shall become effective until DOE publishes notice of its execution and solicits and considers public comments with respect to its terms. On October 23, 1979, DOE published Notice of a Consent Order which was executed between Exxon Company, U.S.A. and DOE (44 FR 61084, October 23, 1979). With that Notice and in accordance with 10 CFR 205.199J(c) DOE invited interested persons to comment on the Consent Order.

No comments were received with respect to the Consent Order. DOE has concluded that the Consent Order as executed between DOE and Exxon Company, U.S.A. is an appropriate resolution of the Compliance proceedings described in the Notice published on October 23, 1979, and hereby gives notice that the Consent Order shall become effective as proposed, without modification, upon publication of this Notice in the Federal Register.

Issued in Washington, D.C., on the 4th day of Jan. 1980.

Paul L. Bloom,

Special Counsel for Compliance.

[FR Doc. 80-741 Filed 1-9-80; 8:45 am]

BILLING CODE 6450-01-M

Feasibility Studies and Cooperative Agreements; Meeting

Notice is hereby given that the Department of Energy (DOE) will hold a presolicitation conference on January 15, 1980 at the Regency Hotel in Denver, Colorado, at 8:30 a.m.

The purpose of this conference is to provide the Department of Energy with comments on its draft solicitation for feasibility studies and cooperative agreements, and on the DOE's program being developed in accordance with Pub. L. 96-126 which makes available to the Secretary of Energy funds to expedite domestic development and production of alternative fuels and to reduce dependence on foreign supplies of energy resources.

Pub. L. 96-126 provides:

$1,500,000,000 to carry out the provisions of the Federal Non Nuclear Energy Research and Development Act of 1974, as amended (42 U.S.C. 5901 et seq.) (Non Nuclear R. & D. Act) for the purpose of production by way of purchase commitments or price guarantees of alternative fuels.

$100,000,000 for Project development feasibility studies not to exceed $4,000,000 each;

$100,000,000 for cooperative agreements with non Federal entities, not to exceed $25,000,000 each, to support commercial scale development of alternative fuels facilities;

$500,000,000 for a reserve to cover any defaults from loan guarantees issued to finance construction of alternative fuels production facilities as authorized by the Non Nuclear R. & D. Act, provided that the indebtedness guaranteed or committed to be guaranteed, shall not exceed $1,500,000,000

Pub. L. 96-126 defines alternative fuels as "gaseous, liquid or solid fuels and chemical feedstocks derived from coal, shale, tar sands, lignite, peat, biomass, solid waste, unconventional natural gas and other minerals or organic materials other than crude oil or any derivative thereof."

The conference is open to the public. The Chairman of the conference is empowered to conduct the meetings in a fashion that will, in his judgment, facilitate the orderly conduct of business. Any member of the public wishing to file a written statement may do so either before or after the meeting. Anyone wishing to make an oral statement should inform Ms. Jeanne Bolean, U.S. Department of Energy (202) 633-8365 before the meeting, and reasonable provision will be made for his appearance on the agenda. Transcripts of the meeting will be available for public review at the Freedom of Information Public Reading Room, Room GA-152, DOE, Forrestal Building, 1000 Independence Avenue, SW., Washington, D.C. between the hours of 8 a.m. and 4:30 p.m. Monday through Friday, except Federal holidays, and at DOE Regional Offices in San Francisco, Chicago, Denver, Boston and Atlanta. Issued at Washington, D.C. on January 4, 1980.

Ruth M. Davis,

Assistant Secretary, Resource Applications.

[FR Doc. 80-742 Filed 1-9-80; 8:45 am]

BILLING CODE 6450-01-M

Intent To Prepare an Environmental Impact Statement and to Conduct a Public Scoping Meeting

AGENCY: Department of Energy.

ACTION: Notice of intent to prepare a Draft Environmental Impact Statement (DEIS) for Oil Shale Development Policy Options for the Naval Oil Shale Reserves No. 1 and 3, Garfield County, Colorado, and to conduct public scoping meetings.

SUMMARY: The Department of Energy (DOE) announces its intent to prepare a DEIS in accordance with Section 102(2)(c) of the National Environmental Policy Act to assess the environmental impact of proposed policy options to develop the 55,000 acre Naval Oil Shale Reserves (NOSR) near Rifle, Colorado.

Commercial scale production is foreseen ranging from one 50,000 barrel per day facility to several facilities producing collectively up to 200,000 barrels per day which is the maximum potential from the NOSR-1 and 3 oil shale resources. At this maximum production rate, the recoverable reserves of high grade oil shale from NOSR-1 and 3 would be exhausted in approximately 25 years. NOSR shale oil development policy options include: (a) Leasing large parcels to industry; (b) joint government/industry ventures; (c) government-owned-contractor-operated (GOCO) ventures; (d) quasi-utility ventures.

Interested agencies, organizations, and the general public are invited to submit comments or suggestions for consideration during the preparation of this DEIS and to attend public scoping meetings in order to assist DOE in identifying significant environmental issues and potential impacts.

DATES: Written comments should be received at DOE by February 23, 1980 to insure consideration in the preparation of the DEIS. The public scoping meetings are scheduled to be held at 7:00 p.m. on February 5, 1980, in Grand Junction, Colorado at the Ramada Inn, 718 Horizon Drive, and at 2:00 p.m. and 7:00 p.m. on February 7, 1980, in Denver at the Federal Building, Room 239, 19th and Stout Street.

ADDRESSES: All comments may be sent to: R. H. Nelson, Capt, CEC, USN, Director, Naval Petroleum and Oil Shale Reserves, U.S. Department of Energy, 12th & Pennsylvania Avenue, Room 3344, Washington, DC 20585, Phone: (202) 633-8674.

For general information on the EIS process, contact: Dr. Robert J. Stern, Acting Director, NEPA Affairs Division, Office of Assistant Secretary for Environment, U.S. Department of Energy, 1000 Independence Avenue, SW, Room 4G-064, Washington, DC 20585, Phone: (202) 252-4600.

SUPPLEMENTARY INFORMATION: NOSR 1 and 3 were withdrawn for the Navy by Executive Order in 1916 and 1924 as potential reserves of military fuels. In 1962, Pub. L. 87-796 gave the Secretary of the Navy the same authority to develop the NOSR's as he had for the Naval Petroleum Reserves. In 1977, Pub. L. 95-91 transferred the jurisdiction over the Naval Petroleum and Oil Shale Reserves from Navy to the Department of Energy.

As a result of the Arab Oil Embargo of 1973-1974, a multi-year pre-development plan for NOSR 1 and 3 was prepared by the Navy and submitted to Congress. Approval of this plan was received in 1977. The objective of the plan was to assess the oil shale and water resources of NOSR-1 and 3; develop environmental baseline data; and determine the most suitable development scenarios for the NOSR-1 and 3 resources. In late 1978, the plan was divided by DOE into two phases. The first is a continuation of efforts to develop environmental baseline data, and a resource and technology assessment, to be completed in late 1981. The second phase will involve site characterization for hypothetical commercial scale facilities including an environmental impact analysis. The second phase could be emphasized beginning in 1981 should the government's efforts to encourage private oil shale development fall short of national objectives. The DEIS described in this Notice, using information developed in Phase I and in DOE's overall oil shale program, will discuss the impacts of various policy options to develop NOSR 1 and 3 in Colorado.

The funds to develop the NOSRs under the several policy options to be considered in the EIS—lease, industry partnership, government ownership, etc.—have not yet been authorized by Congress. The EIS will be included in any DOE recommendation to Congress for NOSR development.

PROCESS DESCRIPTION: Currently, there are two major heating (retorting) processes developed by industry to produce oil from shale: surface and modified *in situ*. Both involve the major steps of mining, extraction, and upgrading shale oil. Transportation of the shale oil from the site to a refinery market is the last major step.

Mining: A 50,000 barrel per day surface retorting facility producing upgraded oil from 30 gallon per ton (high grade) oil shale will require the mining and crushing of about 70,000 tons of oil shale per day. About 85 percent of this tonnage must be disposed of on the surface as spent shale. It may be possible, however, to return a large portion of spent shale to the underground "rooms."

In the modified *in situ* (underground, in-place) process, approximately 20 percent of each retort column is mined to create voids. The remaining rock is rubbilized and retorted by firing *in situ*. The shale oil is then pumped to the surface.

Extraction: There are approximately seventeen technologies available for extracting oil from shale. These fall broadly into the categories of retorting, solvent processing, and bio-leaching. Retorting, the most widely used method, heats oil shale, either in an above ground vessel or *in situ*, to the temperature at which kerogen, the organic material within the ore, is decomposed into gas, condensible oil, and a solid residue. The rate of kerogen decomposition is high at retort temperatures of 900-950°F and complete decomposition occurs within a few minutes. Product characteristics are similar to those of products obtained from thermal cracking and coking of petroleum.

Upgrading: Upgrading described on-site methods for improving the flowability and the chemical properties of shale oil and gas. The methods used are commonly practiced in the petroleum refining industry during conversion of petroleum into finished products (gasoline, diesel, etc.) but modified to accomodate the special characteristcs of shale oil. A minimum of upgrading is necessary to transport shale oil through unheated pipelines.

Identification of Environmental Issues

The EIS will examine and compare the environmental effects of NOSR development options at various levels of production. The following environmental issues will be addressed in this EIS. This list is not intended to be all inclusive, nor is it intended to be a predetermination of impacts.

(1) The effects of the labor market resulting from the development options, and the effects of the resulting labor immigration on the local infrastructure.

(2) the effects of the proposed development options on the communities in Garfield and Rio Blanco Counties, Colorado.

(3) The effects of the NOSR development options on the tax bases.

(4) The general effects of oil shale mining, storage, disposal and plant runoff on surface water and ground water quality and aquatic ecology.

(5) The general effects of the proposed development options on air quality including the combined effects with other major or planned emission sources in the area.

(6) The effects of potential accidents and product releases on water supply and ecology.

(7) The effects of each development option and operation on present and future land use and terrestrial ecology.

(8) The effects of development on local water resources including the Colorado River.

(9) The effects of spent shale disposal.

(10) The effects of transporting the shale oil from the site to a refinery.

For each of the four proposed development policy options, significant economic issues will also be addressed in detail. Some of the major issues for each option are as follows: *Leasing:* maximum parcel size; royalty terms; lease payment schedule; diligence requirements. *Government-industry joint venture:* mix of ownership; investment/payment schedules. *GOCO venture:* treatment of sales and fee schedules. *Quasi-utility venture:* government definition and control of rate of earnings.

Alternatives

In addition to examining and comparing the environmental effects of NOSR development options at various levels of production, the EIS will consider reasonable alternatives to NOSR 1 and 3 development including:

(1) No action

(2) Increased conservation

(3) Oil shale development on other lands

(4) Enhanced oil recovery

(5) Outer continental shelf oil production

(6) Coal liquification
(7) Tar sands
(8) Biomass/Alcohol

Comments and Scoping Meeting

All interested parties are invited to attend the scoping meetings and submit comments or suggestions in connection with the preparation of the EIS. Written comments or suggestions may be submitted in lieu of, or in addition to, participation at the scoping meeting. Those desiring to submit comments or suggestions for issues to be addressed in the Draft EIS should submit them to the following address: U.S. Department of Energy, Naval Petroleum and Oil Shale Reserves, Mail Stop Room 3344, Federal Building, Washington, D.C. 20585, ATTN: Captain R. H. Nelson, Director. Those wishing to participate in the scoping process may attend a public meeting to be held at 7:00 p.m. on February 5, 1980 in Grand Junction, Colorado, at the Ramada Inn, 718 Horizon Drive, and at 2:00 p.m. and 7:00 p.m. on February 7, 1980, in Denver at the Federal Building, Room 239, 19th and Stout Street.

The meetings will not be conducted as an evidentiary hearing and those who choose to make statements may not be cross-examined by other speakers. In order to provide interested persons with equitable opportunities to express their views:

(1) Speakers will be called on to testify in the order they sign-in expressing their intent to speak.

(2) Should any person desire to provide information for the record, it may be submitted in writing prior to February 23, 1979.

(3) A transcript of the meeting will be retained by DOE and made available for inspection at the Freedom of Information Library, Room GA152, Forrestal Bldg., 1000 Independence Ave., NW, Washington, DC 20585 between the hours of 8:00 AM and 4:30 PM, Monday through Friday.

Upon completion of the Draft EIS, its availability will be announced in the Federal Register and local newspapers; public comments will again be solicited.

Those not desiring to submit comments or suggestions at this time but who would like to receive a copy of the Draft EIS for review and comments when it is issued should contact Capt. Robert H. Nelson at the address given earlier in this notice. Those seeking further information may inquire with the above contact or with: Dr. Robert J. Stern, Acting Director, NEPA Affairs Division, Office of the Assistant Secretary for Environment, U.S. Department of Energy, Room 4G064, Forrestal Building, 1000 Independence Avenue, SW, Washington, DC 20585, (202) 252-4600.

All suggestions, comments and questions submitted to the Director, Naval Petroleum and Oil Shale Reserves prior to February 23, 1980 will be carefully considered in the preparation of the Environmental Impact Statement.

Dated at Washington, DC this day of January 4, 1980. For the United States Department of Energy.

Ruth C. Clusen,

Assistant Secretary for Environment.

[FR Doc. 80-738 Filed 1-9-80; 8:45 am]

BILLING CODE 6450-01-M

Standard Oil Co. (Ohio); Proposed Consent Order

AGENCY: Department of Energy (DOE).

ACTION: Notice of Proposed Consent Order with Standard Oil Company (Ohio) and Opportunity for Comment.

I. Introduction

Pursuant to 10 CFR 205.199J, the Office of Special Counsel (OSC) of the Department of Energy (DOE) hereby gives notice of a Consent Order which was executed between Standard Oil Company (Ohio) and the OSC on *November 29, 1979.* In accordance with that section, the OSC will receive comments with respect to this Consent Order. Although the Consent Order has been signed and tentatively accepted by OSC, the OSC may, after consideration of comments received, withdraw its acceptance and if appropriate, attempt to negotiate an alternative Consent Order.

II. The Consent Order

Pursuant to the authority promulgated in 10 CFR 205.199J and Section 301 of the Department of Energy Organization Act, 42 U.S.C. 1751, the Office of Special Counsel (OSC) of the United States Department of Energy (DOE), acting on behalf of DOE, hereby enters into this Consent Order with The Standard Oil Company of Ohio (Sohio), to settle issues arising with respect to its method of determining and reporting increased product and nonproduct costs of gas plant natural gas liquids (NGLs) and natural gas liquid products (NGLPs), as well as its method of computing and reporting increased costs actually recovered by sales of gas plant NGL/NGLPs.

Pursuant to its authority conferred by the Economic Stabilization Act of 1970, as amended, 12 U.S.C. 1904, *note* and The Emergency Petroleum Allocation Act of 1973, as amended, 15 U.S.C. 751 *et seq.*, OSC conducted an examination of the books and records of Sohio covering Sohio's computation of product and non-product cost increases for NGLs and NGLPs from Sohio-operated and interest-owned gas plants for the period August 19, 1973 through December 31, 1977. The examination further covered Sohio's computation of increased costs actually recovered by sales of gas plant NGL/NGLPs during the respective periods of measurement through adjustments to May 15, 1973 prices. The OSC audited Sohio's compliance with the provisions of the DOE regulations applicable to said product and non-product cost increases and said increased cost recoveries.

This Consent Order constitutes a resolution of the compliance matters arising from said audit for the period August 19, 1973 through December 31, 1977. The OSC and Sohio have mutually determined to resolve these compliance matters by means of this Consent Order.

Jurisdiction

The Office of Special Counsel was created by a delegation of authority from the Administrator of the Economic Regulatory Administration, which was established by section 206 of the Department of Energy Organization Act, 42 U.S.C. 7136. Consequently, OSC is empowered to conduct and conclude audits and proceedings concerning the DOE Mandatory Petroleum Price and Allocation Regulations.

Facts and Allegations

The stipulated facts upon which this Consent Order is based are contained in the following paragraphs.

1. Sohio is an independent refiner, as defined in 10 CFR 212.31 and 6 CFR 150.352, and a gas plant owner-operator, as defined in 10 CFR 212.162, and produces and sells gas plant NGLs and NGLPs.

2. The OSC alleges that Sohio incorrectly accounted for and reported increased gas plant NGL and NGLP non-product costs in that Sohio did not compute such increased costs on a cents-per-gallon basis.

3. The OSC alleges that Sohio incorrectly accounted for and reported increased gas plant NGL and NGLP non-product costs in that Sohio did not recognize, in certain instances, the increased non-product costs ceiling of $.005 per gallon required by 10 CFR 212.165.

4. The OSC alleges that Sohio incorrectly accounted for and reported as increased costs amounts related to increases in "prices" "charged" between its affiliated entities for gas plant NGLs and NGLPs transferred between them.

5. The OSC alleges that Sohio incorrectly accounted for and reported increased product costs for natural gas

shrinkage under Subpart K of the Mandatory Petroleum Price Regulations, 10 CFR 212.161 *et seq.*

6. The OSC alleges that Sohio, in reporting increased costs actually recovered by sales during the period of measurement through adjustments to May 15, 1973 selling prices of gas plant NGL/NGLPs, failed to include the portion of actual sales amounts paid to Sohio that Sohio subsequently paid as "net backs."

7. In reporting increased costs actually recovered by sales of gas plant NGL/NGLPs prior to January 1, 1975, Sohio used its actual and lower May 15, 1973, selling prices rather than the adjusted May 15, 1973 selling price permitted by the Class Exception, 2 FEA ¶84,901.

8. Sohio did not compute or report increased non-product costs for its gas plant produced NGLs and NGLPs in 1974.

Terms and Conditions

Sohio, without admitting any noncompliance with, or violation of, any rule or regulation of the DOE, desires to resolve all disputes arising between itself and OSC as a result of the matters described herein in the following manner:

1. Sohio agrees that, within one hundred twenty (120) days of the effective date of this Consent Order, or at the time determined by paragraph 8 of these Terms and Conditions, whichever is earlier, it will adjust its claimed increased gas plant NGL and NGLP non-product costs as recomputed on a cents-per-gallon basis. In addition, Sohio will further adjust its claimed increased NGL and NGLP non-product costs for those months in which an excess of $.005 per gallon is claimed. The amount of such adjustments shall be a net decrease of $410,553 as shown on the attached Schedule A and the adjustment shall be made by Sohio's refiling of Forms CLC-22, FEO-96, P-110-M-1 and EIA-14 by adjusting its computer generated monthly price control reports for the period August 1973 to the then present date and refiling same.

2. OSC agrees that, within sixty (60) days of the effective date of this Consent Order, Sohio may recompute its increased gas plant NGL and NGLP non-product costs for the period of and for each month from January 1974 through December 1974, inclusive, in accordance with the method of computing and reporting increased gas plant non-product costs described in the Class Exception, 2 FEA ¶84901, to obtain the benefit of up to $.0025/per gallon, if cost justified.

3. Sohio agrees that within one hundred twenty (120) days of the effective date of this Consent Order, or at the time determined by paragraph 8 of these Terms and Conditions, whichever is earlier, it will adjust its increased purchased product costs attributable to gasoline for the period of and for each month from August 1973 through December 1977 inclusive to remove reported increased costs attributable to increases in "prices" "charged" between its affiliated entities for gas plant NGLs and NGLPs transferred between them. The amount of such adjustments shall be a decrease of $14,550,621 as shown in the attached Schedule B and the adjustments shall be made by Sohio's refiling of Forms CLC-22, FEO-96, P-110-M-1 and EIA-14 by adjusting its computer generated monthly price control reports for the period August 1973 to the then present date and refiling same.

4. Sohio agrees that within sixty (60) days of the effective date of this Consent Order, it will recompute its increased product costs (shrinkage) for the period of and for each month from August 1973 through December 1977 inclusive. OSC agrees that, in its recomputation, Sohio may claim its increased costs of natural gas shrinkage for the years 1973 and 1974 and may recompute its claimed increased costs of natural gas shrinkage in accordance with the method allowed under DOE Ruling 1975-18. Schedule C of this Consent Order is a format of summary schedules for each month of the audit period August 1973 through December 1977.

5. Sohio agrees that, within one hundred twenty (120) days of the effective date of this consent order, or at the time determined by paragraph 8 of these Terms and Conditions, whichever is earlier, it will adjust its reported increased costs actually recovered by gas plant NGL/NGLP sales for the period of and for each month from January 1974 through December 1977, inclusive. The amount of such adjustments shall be a net increase of $1,664,905 as shown on the attached Schedule D and the adjustment shall be made by Sohio's refiling of Forms CLC-22, FEO-96, P-110-M-1 and EIA-14 by adjusting its computer generated monthly price control reports for the period August 1973 to the then present date and refiling same.

6. OSC agrees that within sixty (60) days of the effective date of this Consent Order, Sohio may recompute its increased costs actually recovered by sales of gas plant NGL/NGLPs for the period prior to January 1, 1975, with the option of using the adjusted May 15, 1973, selling prices, according to the provisions of the Class Exception, 2 FEA ¶ 84,901. Sohio agrees to provide completed certified summary schedules and documentation of its changes and recomputations for each applicable month within sixty (60) days of the effective date of this Consent Order to:

Ralph Veltre, Acting Deputy Director (Eastern Operations), Northeast Refinery Pricing, Office of Special Counsel, U.S. Department of Energy, 782 Midland Building, Cleveland, Ohio 44115.

Additionally, Sohio shall at the same time make available to OSC at Sohio's offices all data, computations, and worksheets used in obtaining the results described in the final summary. OSC shall inspect, review, and test such recomputations and shall notify Sohio in writing within sixty (60) days of such submission as to whether OSC finds the recomputations satisfactory under the terms of this Consent Order. If OSC finds such recomputations unsatisfactory, it will, in the same notification advise Sohio as to the amount of such recomputations that it considers satisfactory.

7. Within sixty (60) days of the effective date of this Consent Order, the recomputations provided for in paragraphs 2 and 4 of these Terms and Conditions, shall be completed and final certified summaries shall be submitted to:

Roy G. Williams, Tulsa Branch Manager, Natural Gas Liquid Audit Division, Office of Special Counsel, U.S. Department of Energy, Southeast Plaza Building, Suite 120, 4530 South Sheridan Road, Tulsa, Oklahoma 74145.

Additionally, Sohio shall at the same time make available to OSC at Sohio's offices all data, computations, and worksheets used in obtaining the results described in the final summary. OSC shall inspect, review, and test such recomputations and shall notify Sohio in writing within sixty (60) days of such submission as to whether OSC finds the recomputations satisfactory under the terms of this Consent Order. If OSC finds such recomputations unsatisfactory, it will, in the same notification advise Sohio as to that amount of such recomputations that it considers satisfactory.

8. Upon OSC's completion of an audit of the final certified summaries and the recomputations through 1977, and within thirty (30) days from the time of written notice to Sohio that OSC has taken no exceptions to such recomputations or to portions of such recomputations, Sohio shall refile Forms CLC-22, FEO-96, P-110-M-1 and EIA-14 by adjusting its computer-generated monthly price control reports for the period from

August 1973 to the then present date and refiling same. Such refilings shall reflect and are limited to the approved portions of the recomputations contained in Sohio's final certified summaries referred to in paragraphs 6 and 7 and the adjustments referred to in paragraph 1, 3 and 5 of these Terms and Conditions.

9. The allowable monthly increased shrinkage costs for Sohio's gas plant NGLs and NGLPs shall be reported on the pricing forms as follows:

(a) *Distribution of Costs.* The total increased shrinkage value and volume of NGLs and NGLPs will be determined for each month of measurement beginning August 1973: On a monthly basis, total allowable increased shrinkage value will be divided by Sohio's total NGL and NGLP production to determine the allowable increased shrinkage costs on a per gallon or per barrel basis. Costs will follow gallons or barrels on a proportionate basis and will be distributed to the applicable cost categories as described below in (b) and (c).

(b) *Further Blended or Refined.* For the period of August 1973 through February 1975, increased shrinkage costs of NGLs and NGLPs used in Sohio's refinery operation as blendstocks or for further refining shall be incorporated into the increased cost of crude oil and reported accordingly. For example, on the Form FEO-96 the increased shrinkage costs for NGLs and NGLPs used as blendstocks or for further refining would be reported as a lump sum addition to line 16 of Part II—Crude Petroleum Cost Data.

Effective March 1, 1975 and extending through January 31, 1976, Sohio had the option of putting increased shrinkage costs of NGLs and NGLPs used as blendstocks to produce a specific product into either the increased purchased product cost category for that related product or into the increased cost of crude oil. Accordingly, Sohio has the option of reporting these costs as a lump sum addition to line 16 of Part II—Crude Petroleum Cost Date—on the Form FEO-96 or as a lump sum addition to line 11 of Parts III, IV or V—Price Adjustment Data—according to the specific product produced.

Effective February 1, 1976, Sohio no longer had the option of reporting these increased shrinkage costs as increased cost of crude oil. Accordingly, for the period of February 1, 1976 through December 31, 1977, these increased shrinkage costs must be reported as increased purchased products costs.

(c) *Sales to Third Parties*—For the period of August 1973 through December 1977, increased shrinkage costs of NGLs and NGLPs which are covered products and are not subject to further refining or blending shall be reported as an addition to increased product costs. For example, on the Form FEO-96 the increased shrinkage costs for NGLs and NGLPs sold to third parties must be reported as a lump sum addition to line 11 of Part V—Price Adjustment Data.

10. The recomputations and adjustments described herein shall be accomplished in such a manner that each subsequent monthly recomputation and adjustment reflects all prior recomputations and adjustments. In the event that such recomputations and adjustments result in over-recoveries in any product category by Sohio, OSC reserves the right to effect refunds or other appropriate remedies. In addition, Sohio agrees to pay interest on any such over-recoveries at the following rates:

a. August 19, 1973 to June 30, 1975—6%

b. July 1, 1975 to January 31, 1976—9%

c. February 1, 1976 to January 31, 1977—7%

d. February 1, 1977 until restitution—6%

11. OSC does not find herein that Sohio has engaged in willful misconduct. However, OSC has determined that the alleged errors resolved by this Consent Order are subject to civil penalties as provided by 10 CFR 205.203. Therefore, OSC and Sohio agree that upon the effective date of this consent order civil penalties are compromised in the amount of $10,000. Said compromise applies only to the issues discussed herein and is expressly limited to the period August 1973 through December 1977. Within ten (10) days from the effective date of this Consent Order, Sohio shall tender to DOE a certified check in that amount payable to the United States Treasury.

12. Satisfactory performance under this Order by Sohio will constitute compliance with the regulations of DOE pertaining to gas plant produced NGL/NGLPs from August 1973 through December 1977.

13. This Consent Order shall not constitute an admission by Sohio that DOE regulations have been violated nor a finding by OSC that Sohio has violated DOE regulations.

14. This Consent Order shall be a final order of the DOE having the same force and effect as a Remedial Order issued pursuant to 10 CFR 205.199B. In consideration of OSC's agreement to the terms of this Consent Order and in accordance with § 205.199J, Sohio hereby expressly waives its right to appeal or obtain judicial review of this Order.

15. This Consent Order shall become effective upon publication of notice to that effect in the **Federal Register**. Prior to is effective date, OSC will publish notice in the **Federal Register** pursuant to 10 CFR 205.199J(c) that it has entered into this Consent Order and will provide not less than thirty (30) days for members of the public to submit written comments with respect to it. After expiration of the comment period and prior to the effective date of this Consent Order, OSC reserves the right to withdraw its consent to this Order for any reason.

16. The provisions of 10 CFR 205.199J are applicable to this Consent Order and are incorporated by reference herein.

III. Submission of Written Comments

Interested persons are invited to comment on the Consent Order by submitting such comments in writing to Nick L. Kelly, Director, NGL Division, Office of Special Counsel, Department of Energy, P.O. Box 35228, Dallas, Texas 75235.

Copies of this Consent Order may be received free of charge by written request to this same address, or by calling 214-767-7560.

Comments should be identified on the outside of the envelope and on doucments submitted with the designation "Comments on Standard Oil Company (Ohio) Consent Order." All comments received by 4:30 p.m., C.S.T. on or before the 30th day following publication of this notice will be considered by the OSC in evaluating the Consent Order.

Any information or data which, in the opinion of the person furnishing it, is confidential, must be identified as such and submitted in accordance with the procedures outlined in 10 CFR 205.9(f).

Issued in Washington, D.C. on January 4, 1980.

Paul L. Bloom,

Special Counsel for Compliance.

[FR Doc. 80-739 Filed 1-9-80; 8:45 am]

BILLING CODE 6450-01-M

Economic Regulatory Administration

Panhandle Eastern Pipe Line Co. Through Its Subsidiary Anadarko; Proposed Consent Order

AGENCY: Economic Regulatory Administration, Department of Energy.

ACTION: Notice of Proposed Consent Order and opportunity for comment.

SUMMARY: The Economic Regulatory Administration (ERA) of the Department of Energy (DOE) announces a proposed Consent Order and provides an opportunity for public comment on the proposed Consent Order and on potential claims against the refunds deposited in an escrow account established pursuant to the Consent Order.

DATE: November 27, 1979.

COMMENTS BY: February 11, 1980.

ADDRESS: Send comments to Alan L. Wehmeyer, Chief, Crude Products Program Management Branch, Central Enforcement District, 324 East 11th Street, Kansas City, Missouri 64106.

FOR FURTHER INFORMATION CONTACT: Alan L. Wehmeyer, Chief, Crude Products Program Management Branch, Central Enforcement District, 324 East 11th Street, Kansas City, Missouri 64106 (816) 374-5932.

SUPPLEMENTARY INFORMATION: On *November 27, 1979,* the Office of Enforcement of the ERA executed a proposed Consent Order with Panhandle Eastern Pipe Line Company (Panhandle) through its subsidiary Anadarko Production Company (Anadarko) of Houston, Texas. Under 10 CFR § 205.199J(b), a proposed Consent Order which involves a sum of $500,000 or more in the aggregate, excluding penalties and interest, becomes effective only after the DOE has received comments with respect to the proposed Consent Order. Although the ERA has signed and tenatively accepted the proposed Consent Order, the ERA may, after consideration of the comments it receives, withdraw its acceptance and, if appropriate, attempt to negotiate an alternative Consent Order.

I. The Consent Order

Anadarko Production Company, with its home office located in Houston, Texas, is engaged in the production and sale of crude oil, and is subject to the Mandatory Petroleum and Allocation and Price Regulations at 10 CFR, Parts 210, 211, and 212. To resolve certain civil actions which could be brought by the Office of Enforcement of the Economic Regulatory Administration as a result of its audit of Anadarko, the ERA Office of Enforcement and Panhandle, through Anadarko, entered into a Consent Order, the significant terms of which are as follows:

1. The Office of Enforcement has examined Anadarko's books and records and reviewed all pertinent matters relating to Anadarko's compliance with the DOE petroleum price regulations in effect during the period from September 1, 1973 through December 31, 1978. All matters pertaining to compliance with the DOE petroleum price regulations and prices charged by Anadarko in sales of crude oil during the period September 1, 1973 through December 31, 1978 are resolved by this Consent Order.

2. Anadarko will refund $542,455.00, plus interest, as specified in the Consent Order. This refund will take place over a twelve (12) month period commencing within thirty (30) days of the effective date of the Consent Order.

3. Execution of the Consent Order constitutes neither an admission by Anadarko nor a finding by DOE that Anadarko has violated any statutes or applicable regulations of the cost of Living Council, the Federal Energy Office, the Federal Energy Administration or the Department of Energy.

4. The provisions of 10 CFR 205.199J, including the publication of this Notice, are applicable to the Consent Order.

II. Disposition of Refunded Overcharges

In this Consent Order, Anadarko agrees to refund, in full settlement of any civil liability with respect to actions which might be brought by the ERA Office of Enforcement, arising out of the transactions specified in I.1. above, the sum of $542,455.00 plus interest within 12 months after the Consent Order becomes effective. Refunded overcharges plus interest will be in the form of certified checks made payable to the United States Department of Energy and will be delivered to the Assistant Administrator of Enforcement, ERA. These funds will remain in a suitable account pending the determination of their proper disposition.

The DOE intends to distribute the refund amounts in a just and equitable manner in accordance with applicable laws and regulations. Accordingly, distribution of such refunded overcharges requires that only those "persons" (as defined at 10 CFR 205.2) who actually suffered a loss as a result of the transactions described in the Consent Order receive appropriate refunds. Because of the petroleum industry's complex marketing system, overcharges may have been passed through as higher prices to subsequent purchasers or offset through devices such as the Old Oil Allocation (Entitlements) Program 10 CFR § 211.67. In fact, the adverse effects of the overcharges may have become so diffused that it is a practical impossibility to identify specific, adversely affected persons, in which case disposition of the refunds will be made in the general public interest by an appropriate means such as payment to the Treasury of the United States pursuant to 10 CFR 205.199I(a).

III. Submission of Written Comments

A. *Potential Claimant:* Interested persons who believe that they have a claim to all or a portion of the refund amount should provide written notification to the ERA at this time. Proof of claim is not now being required. Written notification to the ERA at this time is requested primarily for the purpose of identifying valid potential claims to the refund amount. After potential claims are identified, procedures for the making of proof of claims may be established. Failure by a person to provide written notification of a potential claim within the comment period for this notice may result in the DOE irrevocably disbursing the funds to other claimants or to the general public interest.

B. *Other Comments:* The ERA invites interested persons to comment on the terms, conditions, or procedural aspects of this Consent Order. You should submit your comments or written notification of a claim within 30 days after publication of this notice to Alan L. Wehmeyer, Chief, Crude Products Progam Management Branch, ERA Central Enforcement District, U.S. Department of Energy, 324 East 11th Street, Kansas City, Missouri 64106. You may obtain a free copy of this Consent Order by writing to the same address.

You should identify your comments or written notification of a claim on the outside of your envelope and on the documents you submit with the designation, "Comments on Anadarko Consent Order." We will consider all comments we receive within 30 days after the publication of this notice. You should identify any information or data which, in your opinion, is confidential and submit it in accordance with the procedures in 10 CFR 205(f).

Issued in Kansas City, Missouri on the 12th day of December 1979.

William D. Miller,

District Manager, Central Enforcement District, Economic Regulatory Administration.

[FR Doc. 80-833 Filed 1-9-80; 8:45 am]

BILLING CODE 6450-01-M

Federal Energy Regulatory Commission

Availability of Federal Power Commission Reports: Vol. No. 47

January 7, 1980.

Notice is hereby given that Volume #47 of the *Federal Power Commission Reports* is on sale at the United States Government Printing Office Bookstore. Volume #47 contains Federal Power Commission (Federal Energy Regulatory Commission's predecessor) opinions, orders, and precedential procedural orders for the period January, through June, 1972. Persons interested in purchasing this volume may remit $21.00 for GPO stock #061-002-00029-4 to the following address: Superintendent of Documents, United States Government Printing Office, Washington, DC 20402.

Kenneth F. Plumb,

Secretary.

[FR Doc. 80-796 Filed 1-9-80; 8:45 am]

BILLING CODE 6450-01-M

[Docket No. EL80-9]

Operation Overcharge versus Virginia Electric & Power Co.; Complaint

January 3, 1980.

The filing Company submits the following:

Take notice that Operation Overcharge on December 7, 1979, tendered for filing a complaint against the Virginia Electric and Power Company (VEPCO).

Operation Overcharge states that it is an organization formed by the Chambers of Commerce of Northeastern North Carolina.

Operation Overcharge alleges that there exists a disparity between the wholesale electric rates charged municipals and cooperatives served by VEPCO in northeastern North Carolina and the rates charged by Carolina Power and Light Company and Duke Power Company to similar clients in other regions of North Carolina. Operation Overcharge alleges that this disparity is to a major extent caused by poor management on the part of VEPCO. Operation Overcharge requests that the Commission institute an investigation into these allegations.

Operation Overcharge also requests that the Commission institute a study examining the wholesale rates being charged in northeastern North Carolina to municipals and cooperatives by the various power suppliers.

Operation Overcharge alleges that VEPCO has been making purchases from other power suppliers and reselling to municipals and cooperatives in northeastern North Carolina and has been charging its wholesale customers with the costs of plant operations for plants not in operation. Operation Overcharge requests a study of this matter and a return of any money wrongfully collected.

Operation Overcharge states that it has no counsel and no staff.

Any person desiring to be heard or to protest said filing should file a petition to intervene or protest with the Federal Energy Regulatory Commission, 825 North Capitol Street, N.E., Washington, D.C. 20426, in accordance with §§ 1.8 and 1.10 of the Commission's rules of Practice and Procedure (18 CFR 1.8 and 1.10). All such petitions or protests should be filed on or before January 23, 1980. Protests will be considered by the Commission in determining the appropriate action to be taken, but will not serve to make protestants parties to the proceeding. Any person wishing to become a party must file a petition to intervene. Copies of this filing are on file with the Commission and are available for public inspection.

Kenneth F. Plumb,

Secretary.

[FR Doc. 80-794 Filed 1-9-80; 8:45 am]

BILLING CODE 6450-01-M

[Docket No. GP80-41]

United Gas Pipeline Co.; Third Party Protest [1]

Issued: January 3, 1980.

Take notice that in accordance with the procedures established by the Federal Energy Regulatory Commission (Commission) in Order No. 23-B,[2] and "Order on Rehearing of Order No. 23-B," [3] on December 28, 1979, the staff of the Commission filed a supplemental protest to the assertion by the United Gas Pipeline Company (United) and certain producers that the contracts identified in its protest constitute contractual authority for the producers to charge and collect any applicable maximum lawful price under the Natural Gas Policy Act of 1978 (NGPA).

Staff stated that the language of the contracts contained in Appendix A does not constitute authority for the producer to increase prices to the extent claimed by United in its evidentiary submission.

On November 30, 1979, Antares Oil Corporation filed a supplement to the evidentiary Submission filed by United including an amendment, dated March 1, 1979, to its January 10, 1978, contract with United. While Staff agrees that the amendment contains contractual authority to charge and collect the maximum lawful price under the NGPA, Staff continues to protest all assertions of contractual authority to collect and charge the maximum lawful price prior to March 1, 1979.

Any person, other than the pipeline and the seller, desiring to be heard or to make any response with respect to those protests should file with the Commission, on or before January 17, 1980, a petition to intervene in accordance with 18 CFR 1.8; after that date these protests will be forwarded to the Commission's Chief Administrative Law Judge, for disposition in accordance with Order No. 23-B. The seller need not file for intervention because under 18 CFR § 154.94(j)(4)(ii), the seller in the first sale is automatically joined as a party.

Kenneth F. Plumb,

Secretary.

[1] The term "third party protest" refers to a protest filed by a party who is not a party to the contract which is protested.

[2] "Order Adopting Final Regulations and Establishing Protest Procedure," Docket No. RM79-22, issued June 21, 1979.

[3] Docket No. RM79-22, issued August 6, 1979.

Appendix A

Producer	Rate Schedule Number or Contract Date
Davis Oil Co.	6-19-78.
Exxon Corp.	2-9-78.
Scott Russell Jr.	6-29-74.
Marathon Oil Co.	15/7-16-73.
LA Gas Service Expl. Co.	4-11-78.
Exxon Corp.	6-28-57.
Gulf Oil Corp.	12-21-70.
General American Oil Co. of Texas	37/6-9-75.
Getty Oil Company	7-16-70.
Tenneco Oil Co.	75/10-23-30.
Texaco Inc.	495/12-31-27.
Clemco Inc.	1/9-11-53.
Tenneco Oil Co.	261/6-12-70.
Brammer Engineering Inc.	12-28/70.
Maurice L. Brown	7-16-78.
Texaxo Inc.	48-8-23-74.
Gulf Oil Corp.	323/4-23-46.
Pennzoil Producing Co.	306/3-1-76.
Pennzoil Producing Co.	306/3-1-76.
Getty Oil Co.	239/3-1-76.
Getty Oil Co.	239/3-1-76.
Pickens Co. Inc.	3-1-76.
Sun Oil Co.	21/3-1-76.
David A. Schlachter	9-10-73.
Crystal Oil Co.	7-29-77.
Frank L. Pitts	7-22-77.
Logue & Patterson	2-1-71.
R. L. Lynd	7-1-49.
H. H. Howell	2-19-60.
American Petrofina Co. of Texas	97/10-20/76.
Pennzoil Producing Co.	305/3-1-76.
Texas Oil & Gas Corp.	85/12-31-58.
Houston Oil & Mineral Corp.	11-17-50.
Sun Oil Co.	290/4-14-69.
Hunt Oil Co.	7-03/78.
Intercity Management Corp.	7-19-49.
Amoco Production Co.	4-30-79.
Soverign Exploration Co.	5-1-79.
Reserve Oil & Gas Co.	5-28-71.
Gulf Oil Corp.	74/3-26-46.
Gulf Oil Corp.	74/3-26-46.
Amax Petroleum Corp.	5-20-77.
Sun Oil Co.	66/12-1-74.
Gulf Minerals Inc.	77/6-15-74.
Marathon Oil Co.	16/1-15-75.
Norton Oil Co. Inc.	2-5-75.
Exxon Corp.	110/11-10-75.
Union Oil Co. of Calif.	8-20-79.
Bodcaw Co.	12-12-77.
Amerada Hess Corp.	3-31-78.
Quintana Petro. Corp.	148/6-15-58.
Chevron USA Inc.	147/12-20-74.
Edwin L. Cox	7-21-72.
Ecee Inc.	4-27-78.
Texas Production Co.	4-27-78.
Amax Petroleum Corp.	10-20-77.
Marathon Oil Co.	171/4-29-40.
Art Machin & Assoc. Inc.	2-13-78.
Hunter Co. Inc.	12-6-71.
Southland Royalty Co.	6-21-74.
Crystal Oil Co.	3-1-76.
Sho Van Gas Prod. Co. Inc.	10-15-29.
Harold L. Woods	12-2-69.
Mobil Oil Corp.	114/9-26-37.
Allied Petroleum Co.	10-11-71.
Allied Petroleum Co.	2-4-72.
Allied Petroleum Co.	5-19-72.
Miles Kimball Co.	12-12-72.
Nelson A. McCarter	12-11-75.
Pennzoil Producing Co.	209/7-1-75.
Par Oil Corp.	9-1-70.
Par Oil Corp.	8-9-71.
Par Oil Corp.	4-2-73.
Mobil Oil Corp.	112/9-24-75.
Sugar Creek Producing Co.	12-20-29.
Antares Oil Corp.	1-10-78.

Appendix B

Producer	Rate Schedule Number or Contract Date
Cayman Exploration Corporation	6-4-79.
Cayman Exploration Corporation	6-4-79.
Douglas B. Marshall	6-29-74.
Pennzoil Producing Co.	1-23-79.
Pennzoil Producing Co.	264/2-6-67.
Borden Chemical-Div. of Borden	7-10-59.
Pennzoil Producing Co.	229/7-29-77.
Amoco Production Co.	1-16-79.
Amoco Production Co.	1-16-79.
Texas Oil & Gas Corp.	10-2-79.
Mobil Oil Corp.	564/8-1-78.
Mobil Oil Corp.	564/8-1-78.
Amoco Production Co.	6-5-79.
Amoco Production Co.	6-5-79.
Triton Oil & Gas Corp.	5-1-79.
Grace Petroleum Corp.	5-22-79.
Cotton Petroleum Co.	7-21-79.
Texas Oil & Gas Corp.	11-21-79.
Pennzoil Producing Co.	276/7-28-70.
Pennzoil Producing Co.	276/7-28-70.
SPG Oil Co.	10-23-78.
Soverign Exploration Co.	7-12-78.
Sa-Gu Corporation	11-2-78.
Maynard Oil Co.	5-11-79.
NP Energy Corp.	3-26-79.
C.M. Frost	5-31-79.
Pennzoil Producing Co.	63/5-28-47.
McMoran Exploration Co.	11/9-3-74.
Atlantic Richfield Co.	11-13-78.
R. C. Harris	253/12-29-50.
Canus Petroleum Inc.	5-30-79.
Canus Petroleum Inc.	5-30-79.
Holly Energy Inc.	5-17-79.
Holly Energy Inc.	5-17-79.
Robert Mosbacher	8-28-78.
Saga Petroleum Inc.	8-15-78.
Dynamic Exploration Inc.	2-23-79.
Gulf Oil Corp.	161/7-9-58.
VSEA Inc.	1/5-4-79.
Pinto Inc.	5/5-4-79.
Shell Oil Co.	203/4-30-59.
David Crow Agent	2-13-79.
Pintail Mineral Corp.	7-12-76.
Hogan Drilling Co.	7-24-78.
Perry R. Bass	31/2-7-79.
Pennzoil Producing Co.	283/12-23-71.
Primos Oil & Gas Co. Inc.	5-24-73.
Primos Oil & Gas Co. Inc.	5-24-73.
South Coast Oil Inc.	12-6-71.
Loch Arbor Producing Co.	9-20-78.
Loch Arbor Producing Co.	9-20-78.
Robert E. Powell	12-28-78.
Frank Spooner	7-19-78.
Frank Spooner	5-15-79.
B. G. Denton	8-24-78.
Pioneer O & G Co. Inc.	5-25-79.
Triton Oil & Gas Corp.	5-1-79.
Triton Oil & Gas Corp.	1-16-79.
Pennzoil Producing Co.	11-6-72.

[FR Doc. 80-793 Filed 1-9-80; 8:45 am]

BILLING CODE 6450-01-M

[Docket No. CP80-154]

American Bakeries Co., et al.; Complaint

January 3, 1980.

Take notice that on December 20, 1979, American Bakeries Company (ABC); Guilford Mills, Inc. (Guilford Mills); and Champion Valley Farms, Inc., Community Medical Center, Fitchburg Coated Products, a Division of Litton Business Systems, Inc., Foster Wheeler Energy Corporation, Geisinger Medical Center, National Pretzel Company, Sampson Management Corp., Sprout-Waldron Operations, Koppers Company, Inc., Sunbury Community Hospital; The Trane Company, Westside Area Vocational-Technical School, The Williamsport Hospital, and Wilkes-Barre Area Vocational-Technical School (collectively, Champion Valley Group), Suite 650, 1700 Pennsylvania Avenue, N.W., Washington, D.C. 20006, filed in Docket No. CP80-154 a complaint pursuant to Section 1.6 of the Commission's Rules of Practice and Procedure (18 CFR 1.6) requesting an order of the Commission directing that Transcontinental Gas Pipe Line Corporation (Transco) be called to an immediate conference with the Commission Staff, Complainants and other interested parties to explain the basis and support for Transco's interruption of authorized transportation of natural gas for Complainants and directing the immediate interim reinstitution of that transportation service pending further action by the Commission, all as more fully set forth in the complaint which is on file with the Commission and open to public inspection.

It is indicated that Complainants have each entered into contracts whereby they have purchased gas directly from producers which gas is transported for them by Transco pursuant to Commission authorization under Section 7(c) of the Natural Gas Act and Section 2.79 of the Commission's General Policy and Interpretations (18 CFR 2.79). Complainants state that Transco upon oral notice ceased the transportation service beginning December 17, 1979, for a period of 30 days to 60 days, with Transco's asserting that its entire pipeline capacity is presently needed to provide other services which take precedence over the transportation services for Complainants.

Complainants state that since December 17, 1979, they and their producers have had to make arrangements to keep gas flowing out of the wells, including arrangements to divert temporarily to other buyers, the gas produced at the wells dedicated to service Complainants' needs. It is maintained that these actions are necessitated to prevent immediate irreparable harm caused by shutting in wells due to Transco's cut-off of transportation service. It is further maintained that while there have been no plant shutdowns caused by Transco's actions as of yet, there has been great pressure exerted upon Complainants and others like situated to find alternative sources of energy to keep their plants in operation and that they are suffering substantive expense in obtaining alternative gas supplies while Transco forces gas on its customers that would in many cases be used as low priority boiler fuel.

Complainants allege that Transco is under a contractual and certificate obligation to transport the subject gas and that Transco's actions, if unauthorized, constitute unlawful abandonments of service under Section 7 of the Natural Gas Act.

It is asserted that since Transco has not provided enough facts for the Commission, Complainants, or anyone else to know the basis for its actions, it cannot be determined whether there has been an unauthorized abandonment and that the continuing irreparable harm to Complainants and their producers calls for emergency interim relief requiring Transco to reinstitute the transportation service.

Any person desiring to be heard or to make any protest with reference to said complaint should on or before February 22, 1980, file with the Federal Energy Regulatory Commission, Washington, D.C. 20426, a petition to intervene or a protest in accordance with the requirements of the Commission's Rules of Practice and Procedure (18 CFR 1.8 or 1.10). All protests filed with the Commission will be considered by it in determining the appropriate action to be taken but will not serve to make the protestants parties to the proceeding. Any person wishing to become a party to a proceeding or to participate as a party in any hearing therein must file a petition to intervene in accordance with the Commission's Rules.

Kenneth F. Plumb,

Secretary.

[FR Doc. 80-797 Filed 1-9-80; 8:45 am]

BILLING CODE 6450-01-M

[Docket No. ER80-144]

Appalachian Power Co.; Changes in Rates and Charges

January 3, 1980.

The filing Company submits the following:

Take notice that American Electric Power Service Corporation (AEP) on December 27, 1979, tendered for filing on behalf of its affiliates, Appalachian Power Company (Appalachian), Modification No. 10 dated November 15, 1979 to the Interconnection Agreement dated February 1, 1948 between Appalachian Power Company and Virginia Electric and Power Company (Appalachian Rate Schedule FPC No. 16).

Section 1 of Modification No. 10 provides for an increase in the demand charge for Short Term Power from $0.70 to $0.85 per kilowatt per week and Section 3 provides for an increase in the demand charge for Limited Term Power from $3.75 to $4.50 per kilowatt per month. Section 2 of Modification No. 10 provides for an increase in the transmission charge for third party Short Term Power transactions from $0.175 per kilowatt per week to $0.240 per kilowatt per week and Section 4 provides for an increase in the transmission charge for third party Limited Term transactions from $0.75 per kilowatt per month to $1.00 per kilowatt per month. All of the aforementioned Schedules proposed to become effective January 1, 1980. Applicant states that since the use of Short Term and Limited Term Power cannot be accurately estimated, it is impossible to estimate the increase in revenues resulting from the Modification. Applicant's Exhibits I and II which were included with the filing of this modification, demonstrate that the increase in revenues, which would have resulted had the modification been in effect during the twelve month-period ending November, 1979, would have been a) for Short Term $1,379,995.00 (i.e., from $35,630,136.80 to $37,010,131.81) and b) for Limited Term $4,237,500.00 (i.e., from $95,675,106.60 to $99,912,606.60).

Copies of the filing were served upon Virginia Electric and Power Company, the Virginia State Corporation Commission and the Public Service Commission of West Virginia.

Any person desiring to be heard or to protest said application should file a petition to intervene or protest with the Federal Energy Regulatory Commission, 825 N. Capitol Street, Washington, D.C. 20426 in accordance with Sections 1.8 and 1.10 of the Commission's Rules of Practice and Procedure (18 CFR 1.8, 1.10). All such petitions or protests should be filed on or before January 23, 1980. Protests will be considered by the Commission in determining the appropriate action to be taken. Any person wishing to become a party must file a petition to intervene. Copies of this application are on file with the Commission and are available for public inspection.

Kenneth F. Plumb,

Secretary.

[FR Doc. 80-798 Filed 1-9-80; 8:45 am]

BILLING CODE 6450-01-M

[Docket No. CP80-153]

Cerro Wire & Cable Co., et al.,[1] Complainants v. Transcontinental Gas Pipe Line Corporation, Defendant; Complaint

January 3, 1980.

Take notice that on December 20, 1979, Cerro Wire & Cable Co., *et al.* (Complainants), Simons & Simons, 1629 K Street, N.W., Washington, D.C. 20006, filed in Docket No. CP 80-153 a complaint pursuant to Section 1.6 of the Commission's Rules of Practice and Procedure (18 CFR 1.6) advising the Commission that Transcontinental Gas Pipe Line Corporation (Transco), without first obtaining Commission permission and approval under Section 7(b) of the Natural Gas Act, is threatening to abandon (if it has not already abandoned) the transportation service for Complainants authorized by the Commission's order of October 31, 1979, in Docket No. CP77-240, and requesting the Commission to take appropriate action to ensure Transco's compliance with the requirements of the Natural Gas Act, the regulations and orders thereunder, and the obligations of the certificate granted by the order of October 31, 1979, all as more fully set forth in the complaint which is on file with the Commission and open to public inspection.

Complainants request that Transco be directed to continue its authorized transportation service pending completion of the requested investigation and that the Commission convene, as promptly as possible, an informal conference among its Staff, Transco, complainants, and other interested parties in an effort to expedite resolution of this controversy.

Complainants state that primarily as a result of curtailment of service by Transco, its distributor-supplier was unable to supply the process fuel needs of Complainants and that complainants contracted for the direct purchase of natural gas from producers in Texas and Louisiana and arranged with Transco to transport such gas under authorization pursuant to Section 7(c) of the Natural Gas Act and Section 2.79 of the Commission's General Policy and Interpretations (18 CFR 2.79).

It is alleged that upon oral notice by Transco, effective December 17, 1979, the transportation service would be terminated for a period ranging from 30 to 90 days. Further, Complainants allege that if the transportation service is interrupted, they would incur an additional expense, over and above the delivered cost of the subject gas, to acquire natural gas from their distributor and that unless an interim market is available on very short notice, the wells involved would be shut in, which means, at best, a loss of production, and at worst, a permanent loss of gas reserves.

Complainants state that Transco's claimed basis for termination of the transportation service is that Transco no longer has sufficient pipeline capacity to render such service.

Any person desiring to be heard or to make any protest with reference to said complaint should on or before February 2, 1980, file with the Federal Energy Regulatory Commission, Washington, D.C. 20426, a petition to intervene or a protest in accordance with the requirements of the Commission's Rules of Practice and Procedure (18 CFR 1.8 or 1.10). All protests filed with the Commission will be considered by it in determining the appropriate action to be taken but will not serve to make the protestants parties to the proceeding. Any person wishing to become a party to a proceeding or to participate as a party in any hearing therein must file a petition to intervene in accordance with the Commission's Rules.

Kenneth F. Plumb,

Secretary.

[FR Doc. 80-799 Filed 1-9-80; 8:45 am]

BILLING CODE 6450-01-M

[1] Cerro Wire & Cable Co., Entenmann's Inc., Global Steel Products Corporation, Kaiser Aluminum & Chemical Corporation, Knickerbocker Partitation Corporation, Lawrence Aviation Industries, Inc., and Gim Metal Products Division of Lightron Corporation.

[Docket No. GP80-12]

Consolidated Gas Supply Corp.; Amended Notice of Protest

Issued: January 3, 1979.

In the Notice of Protest issued in this docket on December 11, 1979, the third-party protest of Associated Gas Distributors (AGD), regarding all of the contracts contained in Consolidated Gas Supply Corporation's (Consolidated) Evidentiary Submission for the Appalachian area, was included. Under separate cover, also on October 15, 1979, AGD filed its third-party protest with respect to Consolidated's Louisiana and Offshore contracts. These contracts were inadvertantly omitted from the Notice of Protest of December 11, 1979. Notice is hereby given that in addition to the contracts listed in the December 11, 1979, Notice, the contracts found in the apendix attached hereto are subject to third-party protest of AGD.

Furthermore, on November 30, 1979, AGD filed a Supplemental Protest in this docket. By this Supplemental Protest, AGD withdrew its protest to the

Carnegie Contract numbered 1693, due to the withdrawal by Carnegie of its claim to NGPA rates. AGD also withdrew its protest to the S.W. Jack Drilling contract numbered 220, inasmuch as the contract contains a Code F price clause, and not Code I, as previously noted by Consolidated. AGD retains that part of its protest of this contract to the extent described in Part X of AGD's October 15, 1979, Protest of Appalachian Contracts.

Any person, other than the pipeline and the seller, desiring to be heard or to make any response with respect to these protests should file with the Commission, on or before January 17, 1980, a petition to intervene in accordance with 18 CFR 1.8. The seller need not file for intervention because under 18 CFR § 154.94(j)(4)(ii), the seller in the first sale is automatically joined as a party.

Kenneth F. Plumb,

Secretary.

Appendix

Producer and Rate Schedule No. or Contract Date

CNG Producing Company, 1/7-24-73.
CNG Producing Company, 2/4-24-74.
CNG Producing Company, 16/6-25-73.
CNG Producing Company, 17/6-25-73.
CNG Producing Company, 18/6-25-73.
CNG Producing Company, 19/6-25-73.
CNG Producing Company, 20/6-25-73.
CNG Producing Company, 21/6-25-73.
CNG Producing Company, 22/6-25-73.
CNG Producing Company, 23/6-25-73.
CNG Producing Company, 24/6-25-73.
CNG Producing Company, 25/9-19-73.
CNG Producing Company, 26/9-19-73.
CNG Producing Company, 27/1-9-75.
Texas Gas Exploration Corporation, 28/1-5-73.
Texas Gas Exploration Corporation, 35/1-5-73.
CNG Producing Company, 28/2-19-75.
CNG Producing Company, 29/2-19-75.
CNG Producing Company, 30/2-19-75.
CNG Producing Company, 31/2-19-75.
CNG Producing Company, 33/7-18-77.
CNG Producing Company, 34/8-16-77.
CNG Producing Company, 35/9-2-77.
CNG Producing Company, 36/7-21-77.
CNG Producing Company, 37/7-18-77.
CNG Producing Company, 38/2-19-75.
CNG Producing Company, 39/4-26-78.
CNG Producing Company, 40/6-16-78.
CNG Producing Company, 41/7-3-78.
CNG Producing Company, 43/10-3-78.
Texas Gas Exploration Corporation, 50/2-17-78.
Texas Gas Exploration Corporation, 51/2-17-78.
Texaco Incorporated, 57/3-18-75.
Louisiana Land and Exploration Corporation, 26/4-11-78.
Murphy Oil Corporation, 31/8-24-78.

[FR Doc. 80-800 Filed 1-9-80; 8:45 am]

BILLING CODE 6450-01-M

[Docket No. ER80-143]

Commonwealth Edison Co.; Tariff Change

January 3, 1980.

The filing Company submits the following:

Take notice that Commonwealth Edison Company on December 27, 1979 tendered for filing proposed changes in its FERC Electric Service Tariff No. 14, an Interconnection Agreement, dated April 1, 1973, between Commonwealth Edison Company and Wisconsin Electric Power Company.

The proposed changes, which the parties have agreed upon, modify certain compensation provisions in Service Schedule B and Service Schedule D.

Copies of the proposed rate schedule changes were served upon the Illinois Commerce Commission, Springfield, Illinois, the Public Service Commission of Wisconsin, Madison, Wisconsin and Wisconsin Electric Power Company, Milwaukee, Wisconsin.

Any person desiring to be heard or to protest said application should file a petition to intervene or protest with the Federal Energy Regulatory Commission, 825 North Capitol Street, NE., Washington, D.C. 20426 in accordance with the Commission's Rules of Practice and Procedure (18 CFR 1.8, 1.10). All such petitions or protests should be filed on or before January 23, 1980. Protests will be considered by the Commission in determining the appropriate action to be taken, but will not serve to make protestants parties to the proceeding. Any person wishing to become a party must file a petition to intervene. Copies of this application are on file with the Commission and are available for public inspection.

Kenneth F. Plumb,

Secretary.

[FR Doc. 80-801 Filed 1-9-80; 8:45 am]

BILLING CODE 6450-01-M

[Docket No. ER80-151]

Duke Power Co.; Supplement to Electric Power Contact

January 3, 1980.

The filing Company submits the following:

Take notice that Duke Power Company (Duke Power) tendered for filing on December 27, 1979 a supplement to the Company's Electric Power Contract with Union Electric Membership Corporation. Duke Power states that this contract is on file with the Commission and has been designated Duke Power Company Rate Schedule FERC No. 141.

Duke Power further states that the Company's contract supplement, made at the request of the customer and with agreement obtained from the customer, provides for the changes in SEPA reallocation. Duke Power proposes an effective date of December 20, 1979.

According to Duke Power copies of this filing were mailed to Union Electric Membership Corporation and the North Carolina Utilities Commission.

Any person desiring to be heard or to protest said filing should file a petition to intervene or protest with the Federal Energy Regulatory Commission, 825 North Capitol Street, N.E. Washington, D.C. 20426 in accordance with the Commission's Rules of Practice and Procdecure (18 CFR 1.8, 1.10). All such petitions or protests should be filed on or before January 23, 1980. Protests will be considered by the Commission in determining the appropriate action to be taken, but will not serve to make protestants parties to the proceeding. Any person wishing to become a party must file a petition to intervene. Copies of this filing are on file with the Commission and are available for public inspection.

Kenneth F. Plumb,

Secretary.

[FR Doc. 80-802 Filed 1-9-80; 8:45 am]

BILLING CODE 6450-01-M

[Docket No. ER80-149]

Duke Power Co., Supplement to Electric Power Contract

January 3, 1980.

The filing Company submits the following:

Take notice that Duke Power Company (Duke Power) tendered for filing on December 27, 1979 a supplement to the Company's Electric Power Contract with Blue Ridge Electric Cooperative, Inc. Duke Power states that this contract is on file with the Commission and has been designated Duke Power Company Rate Schedule FERC No. 142.

Duke Power further states that the Company's contract supplement, made at the request of the customer and with agreement obtained from the customer, provides for the following changes in designated demand: Delivery Point No. 3 from 3400 KW to -0- KW, Delivery Point No. 17 from -0- KW to 5,500 KW.

Duke Power indicates that this supplement also includes an estimate of sales and revenue for twelve months immediately preceding and for the twelve months immediately succeeding

the effective date. Duke Power proposes an effective date of December 18, 1979.

According to Duke Power copies of this filing were mailed to Blue Ridge Electric Cooperative, Inc. and the South Carolina Public Service Commission.

Any person desiring to be heard or to protest said filing should file a petition to intervene or protest with the Federal Energy Regulatory Commission, 825 North Capitol Street, N.E., Washington, D.C. 20426, in accordance with Sections 1.8 and 1.10 of the Commission's Rules of Practice and Procedure (18 CFR 1.8, 1.10). All such petitions or protests should be filed on or before January 23, 1980. Protests will be considered by the Commission in determining the appropriate action to be taken, but will not serve to make protestants parties to the proceeding. Any person wishing to become a party must file a petition to intervene. Copies of this filing are on file with the Commission and are available for public inspection.

Kenneth F. Plumb,

Secretary.

[FR Doc. 80-803 Filed 1-9-80; 8:45 am]

BILLING CODE 6450-01-M

[Docket No. ER80-148]

Duke Power Co.; Supplement to Electric Power Contract

January 3, 1980.

The filing Company submits the following:

Take notice that Duke Power Company (Duke Power) tendered for filing on December 27, 1979 a supplement to the Company's Electric Power Contract with Broad River Electric Cooperative. Duke Power states that this contract is on file with the Commission and has been designated Duke Power Company Rate Schedule FERC No. 143.

Duke Power further states that the Company's contract supplement made at the request of the customer and with agreement obtained from the customer, provides for the changes in SEPA reallocation. Duke Power proposes an effective date of December 18, 1979.

According to Duke Power copies of this filing were mailed to Broad River Electric Cooperative, Inc. and the South Carolina Public Service Commission.

Any person desiring to be heard or to protest said filing should file a petition to intervene or protest with the Federal Energy Regulatory Commission, 825 North Capitol Street, N.E., Washington, D.C. 20426, in accordance with Sections 1.8 and 1.10 of the Commission's Rules of Practice and Procedure (18 CFR 1.8, 1.10). All such petitions or protests should be filed on or before January 23, 1980. Protests will be considered by the Commission in determining the appropriate action to be taken, but will not serve to make protestants parties to the proceeding. Any person wishing to become a party must file a petition to intervene. Copies of this filing are on file with the Commission and are available for public inspection.

Kenneth F. Plumb,

Secretary.

[FR Doc. 80-804 Filed 1-9-80; 8:45 am]

BILLING CODE 6450-01-M

[Docket No. ER80-150]

Duke Power Co.; Supplemental to Electric Power Contract

January 3, 1980.

The filing Company submits the following:

Take notice that Duke Power Company (Duke Power) tendered for filing on December 27, 1979 a supplement to the Company's Electric Power Contract with Rutherford Electric Membership Corp. Duke Power states that this contract is on file with the Commission and has been designated Duke Power Company Rate Schedule FERC No. 139.

Duke Power further states that the Company's contract supplement, made at the request of the customer and with agreement obtained from the customer, provides for the changes in SEPA reallocation. Duke Power proposes an effective date of December 18, 1979.

According to Duke Power copies of this filing were mailed to Rutherford Electric Membership Corp. and the North Carolina Utilities Commission.

Any person desiring to be heard or to protest said filing should file a petition to intervene or protest with the Federal Energy Regulatory Commission, 825 North Capitol Street, N.E., Washington, D.C. 20426, in accordance with Sections 1.8 and 1.10 of the Commission's Rules of Practice and Procedure (18 CFR 1.8, 1.10). All such petitions or protests should be filed on or before January 23, 1980. Protests will be considered by the Commission in determining the appropriate action to be taken, but will not serve to make protestants parties to the proceeding. Any person wishing to become a party must file a petition to intervene. Copies of this filing are on file with the Commission and are available for public inspection.

Kenneth F. Plumb,

Secretary.

[FR Doc. 80-805 Filed 1-9-80; 8:45 am]

BILLING CODE 6450-01-M

[Docket No. ER80-145]

The Empire District Electric Co.; Filing

January 3, 1980.

The filing Company submits the following:

Take notice that on December 27, 1979, The Empire District Electric Company tendered for filing F.E.R.C. Electric Tariff Original Volume No. 1, Section 6, 2nd Revised Sheet No. 22, Index of Purchasers, replacing Section 6, 1st Revised Sheet No. 22 and executed service agreements with the City of Monett, Missouri, and the City of Mt. Vernon, Missouri. This filing is made to update the Index of Purchasers and forward the executed service agreements.

As this filing does not involve a rate change and merely updates the tariff, the Company requests a waiver of notice requirements.

Any person desiring to be heard or to protest said filing should file a petition to intervene or protest with the Federal Energy Regulatory Commission, 825 North Capitol Street, NE., Washington, D.C. 20426 in accordance with the Commission's Rules of Practice and Procedure (18 CFR 1.8, 1.10). All such petitions or protests should be filed on or before January 23, 1980. Protests will be considered by the Commission in determining the appropriate action to be taken, but will not serve to make protestants parties to the proceeding. Any person wishing to become a party must file a petition to intervene. Copies of this filing are on file with the Commission and are available for public inspection.

Kenneth F. Plumb,

Secretary.

[FR Doc. 80-806 Filed 1-9-80; 8:45 am]

BILLING CODE 6450-01-M

[Docket No. ER80-152]

Florida Power Corp.; Filing

January 3, 1980.

The filing Company submits the following:

Take notice that on December 28, 1979, Florida Power Corporation ("Florida Power") tendered for filing an Interconnection Agreement ("Agreement") between Florida Power and the City of Gainesville entered into on December 1, 1979. The Agreement provides for the following interconnection services: emergency energy, short-term firm capacity and energy, economy energy and long-term firm capacity and energy. Florida Power asks that the sixty (60)-day notice requirement be waived so that the

Agreement, in accordance with its terms, may be permitted to become effective on December 1, 1979.

Any person desiring to be heard or to make any protest with reference to said filing should, on or before January 23, 1980, file with the Federal Energy Regulatory Commission, 825 North Capitol Street, N.E., Washington, D.C. 20426, petitions to intervene or protests in accordance with the requirements of the Commission's Rules of Practice and Procedure (18 C.F.R. 1.8 or 1.10).

All protests filed with the Commission will be considered by it in determining the appropriate action to be taken but will not serve to make the protestants parties to the proceeding. Persons wishing to participate as a party in any hearing therein must file petitions to intervene in accordance with the Commission's Rules. The documents filed by Florida Power are on file with the Commission and available for public inspection.

Kenneth F. Plumb,

Secretary.

[FR Doc. 80-807 Filed 1-9-80; 8:45 am]

BILLING CODE 6450-01-M

[Docket No. ID-1885]

Gordon L. Mills; Application

January 3, 1980.

Take notice that on December 27, 1979, Gordon L. Mills (Applicant), filed an application pursuant to Section 305(b) of the Federal Power Act to hold the following positions:

Director, Monongahela Power Company, Public Utility.

Director, The Potomac Edison Company, Public Utility.

Director, West Penn Power Company, Public Utility.

Any person desiring to be heard or to protest said application should file a petition to intervene or protest with the Federal Energy Regulatory Commission, 825 North Capitol Street, N.E., Washington, D.C. 20426, in accordance with Sections 1.8 and 1.10 of the Commission's Rules of Practice and Procedure (18 CFR 1.8, 1.10). All such petitions or protests should be filed on or before January 25, 1980. Protests will be considered by the Commission in determining the appropriate action to be taken, but will not serve to make protestants parties to the proceeding. Any person wishing to become a party must file a petition to intervene. Copies of this application are on file with the Commission and are available for public inspection.

Kenneth F. Plumb,

Secretary.

[FR Doc. 80-808 Filed 1-9-80; 8:45 am]

BILLING CODE 6450-01-M

[Docket No. ER80-146]

Kansas City Power & Light Co.; Tariff Change

January 3, 1980.

The filing Company submits the following:

Take notice that on December 27, 1980, Kansas City Power & Light Company ("KCPL") tendered for filing First Amendatory Agreement to the Cooperative Firm Power Contract dated July 7, 1977 between KCPL and United Electric Cooperative, Inc. ("Cooperative"). This Agreement amends KCPL's Rate Schedule FERC No. 84.

KCPL states that the purpose of this filing is to provide for an additional point of delivery for Wholesale Firm Power Service to the Cooperative near Centerville, Kansas. Service was initiated at this additional point of delivery on October 16, 1979 and KCPL proposes that the First Amendatory Agreement filed herein be made effective as of that date.

Any person desiring to be heard or to protest said filing should file a petition to intervene or protest with the Federal Energy Regulatory Commission, 825 North Capitol St., NE., Washington, D.C. 20426, in accordance with Sections 1.8 and 1.10 of the Commission's Rules of Practice and Procedure (18 CFR 1.8, 1.10). All such petitions or protests should be filed on or before January 23, 1980. Protests will be considered by the Commission in determining the appropriate action to be taken, but will not serve to make protestants parties to the proceeding. Any person wishing to become a party must file a petition to intervene. Copies of this filing are on file with the Commission and are available for public inspection.

Kenneth F. Plumb,

Secretary.

[FR Doc. 80-809 Filed 1-9-80; 8:45 am]

BILLING CODE 6450-01-M

[Docket No. ER-80-147]

Pacific Gas & Electric Co.; Revised Contract

January 3, 1980.

The filing Company submits the following:

Take notice that on December 27, 1979, Pacific Gas and Electric Company (PGandE) tendered for filing a revised contract dated June 20, 1979, entitled "Agreement for Sale of Electric Capacity and Energy by Pacific Gas and Electric Company to Bay Point Light and Power Company" (Agreement). The Agreement supersedes PGandE's November 18, 1955 contract with Bay Point, Rate Schedule FPC No. 11. Neither the rates nor the general terms and conditions applicable to sales to Bay Point and included in PGandE's Electric Tariff Original Volume No. 2 is affected by this filing. The Agreement reflects changes in operating relationships occurring in the past twenty four years and provides for changes caused by an anticipated six-fold increase on Bay Point's total system load by the end of 1981. PGandE requests waiver of the prior notice requirement (Section 35.11 of the Commission's regulations) to allow the Agreement to become effective July 13, 1979, the date of the execution of the Agreement. Waiver of the notice requirement will have no effect on purchasers under any other rate schedule of PGandE.

Copies of the filing were served upon Bay Point Light and Power Company and the Califorina Public Utilities Commission.

Any person desiring to be heard or to protest said filing should file a petition to intervene or protest with the Federal Energy Regulatory Commission, 825 North Capitol Street, Washington, D.C., 20426, in accordance with Sections 1.8 and 1.10 of the Commission's Rules of Practice and Procedure (18 CFR 1.8, 1.10). All such petitions or protests should be filed on or before January 23, 1980. Protests will be considered by the Commission in determining the appropriate action to be taken, but will not serve to make protestants parties to the proceeding. Any person wishing to become a party must file a petition to intervene. Copies of this application are on file with the Commission and are available for public inspection.

Kenneth F. Plumb,

Secretary.

[FR Doc. 80-810 Filed 1-9-80; 8:45 am]

BILLING CODE 6450-01-M

[Docket No. ER80-153]

The Union Light, Heat & Power Co.; Tariff Change

January 3, 1980.

The filing Company submits the following: Take notice that The Union Light, Heat and Power Company (Union Light) on December 28, 1979, tendered

for filing proposed changes in its FERC Electric Tariff, Original Volume No. 1 specifically the rate schedules in said Tariff applicable to wholesale electric service to the City of Williamstown, Kentucky. Union Light proposes that the changes become effective February 19, 1980.

Union Light asserts that the filing is in accordance with Part 35 of the Commission's Regulations. Union Light states that the schedules as filed will supersede rate schedules presently on file with this Commission.

The proposed changes would increase revenues by approximately $96,000 based on the estimated twelve month period ended December 31, 1979.

The sole reason stated by Union Light for the change in rate schedule is to pass through to the City of Williamstown the City's share of the increase in purchased power cost to Union Light derived from the Application of the Cincinnati Gas & Electric Company filed on July 20, 1979 with this Commission in Docket No. ER79-528 to increase the wholesale electric rate to Union Light. The proposed rate of The Cincinnati Gas & Electric Company was suspended to February 19, 1979.

Copies of the filing were served upon The City of Williamstown, Kentucky and the Energy Regulatory Commission of Kentucky.

Any person desiring to be heard or to protest said filing should file a petition to intervene or protest with the Federal Energy Regulatory Commission, 825 North Capitol Street, N.E., Washington, D.C. 20426, in accordance with Sections 1.8 and 1.10 of the Commission's Rules of Practice and Procedure (18 CFR 1.8, 1.10).

All such petitions or protests should be filed on or before January 23, 1980. Protests will be considered by the Commission in determining the appropriate action to be taken, but will not serve to make protestants parties to the proceeding. Any person wishing to become a party must file a petition to intervene. Copies of this filing are on file with the Commission and are available for public inspection.

Kenneth F. Plumb,

Secretary.

[FR Doc. 80-811 Filed 1-9-80; 8:45 am]

BILLING CODE 6450-01-M

Office of Hearings and Appeals

Application for Exception and Petition for Special Redress Filed by Ashland Oil, Inc.

AGENCY: Department of Energy, Office of Hearings and Appeals.

ACTION: Notice of public hearing.

SUMMARY: The Office of Hearings and Appeals of the Department of Energy (DOE) hereby gives notice of a public hearing to be held in Washington, D.C. to receive comments concerning a temporary exception which was granted to Ashland Oil, Inc. on November 27, 1979. The purpose of the hearing is to provide all interested parties with an opportunity to request that modifications be made in the temporary exception, based upon new facts or economic developments since November 27.

DATE OF HEARING: January 16, at 10 a.m.

HEARING LOCATION: Room 2105, 2000 M Street, N.W., Washington, D.C. 20461.

SUPPLEMENTARY INFORMATION: On November 20, 1979 Ashland Oil, Inc. (Ashland) filed an Application for Temporary Exception with the Office of Hearings and Appeals, Case Number BEL-0373. In its submission, Ashland stated that as a result of the President's order of November 12, 1979, which prohibited the importation of crude oil from Iran, the firm has lost access to 100,000 barrels per day of crude oil at contract prices. Ashland maintained that the firm, its customers, and the marketing area in which it operates would be required to bear a disproportionate share of the burdens resulting from the President's order unless the DOE took immediate action to provide Ashland with additional supplies of relatively low cost crude oil.

In view of the representations made by Ashland concerning the need for immediate relief, the Office of Hearings and Appeals convened a series of hearings on November 26 and 27, 1979. At the conclusion of the hearing on November 27, the Director of the Office of Hearings and Appeals rendered an oral Decision and Order which partially granted the Ashland Application for Temporary Exception. A written version of the Decision and Order was also issued on November 27. A full discussion of the reasons for the decision appears in the transcript of the November 27 hearing. The transcript is available for inspection in the Office of Hearings and Appeals Public Docket Room, Room B-120, 2000 M Street, N.W., Washington, D.C., weekdays between the hours of 1:00 p.m. and 5:00 p.m.

In the November 27 determination, the Office of Hearings and Appeals assigned nine firms to supply Ashland with varying quantities of crude oil totaling 80,000 barrels per day during the period December 1, 1979 through February 29, 1980. The methodology by which these firms were selected and their supply obligations calculated is described in detail in a Supplemental Order which was issued on Nobember 30, 1979, Case Number BEX-0013. The maximum price for sales of crude oil to Ashland made pursuant to the temporary exception is the weighted average F.O.B. cost of all foreign oil purchased by the supplier for delivery into the United States during the months of November 1979 and December 1979 plus the actual cost of transportation plus $1.50 per barrel.

The temporary exception determination also directed Ashland to operate its refineries at no less than the average level of refinery utilization of the firm during the June 1979 through September 1979 period. In addition, Ashland is required to maintain an allocation fraction for motor gasoline of at least 85 percent and to maintain adequate and appropriate service to its middle distillate, aviation fuel, kerosene, and residual fuel oil customers.

The November 27 Decision and Order also stated that a subsequent hearing would be held in January 1980 to provide interested parties with an opportunity to request that the temporary exception be modified. Such requests should be based upon facts that were not known at the time of the November 26 and 27 hearings or upon subsequent economic developments.

The hearing that will be convened on January 16, 1980 is for the purpose of oral argument. Consequently, a person will generally not be permitted to read a prepared text at the hearing. A party may, however, submit written statements for inclusion in the record of the proceeding and present oral arguments.

The Office of Hearings and Appeals reserves the right to establish the procedures governing the conduct of the hearing. The Director of the Office of Hearings and Appeals or his designee will preside at the hearing. Any further procedural rules necessary for the conduct of the hearing will be announced at the hearing by the Presiding Officer.

A transcript of the hearing will be made and may be purchased from the reporter. The entire record of the hearing will be retained by DOE and will be made available for public inspection at the Office of Hearings and Appeals Public Document Room.

Issued in Washington, D.C., January 7, 1980.

Melvin Goldstein,

Director, Office of Hearings and Appeals.

[FR Doc. 80-834 Filed 1-9-80; 8:45 am]

BILLING CODE 6450-01-M

ENVIRONMENTAL PROTECTION AGENCY

[FRL 1387-5; PP 5G1579/T227]

Abbott Laboratories; Renewal of a Temporary Tolerance

On May 6, 1976, the Environmental Protection Agency (EPA) announced (41 FR 18709) a renewal of a temporary tolerance for combined residues of the plant regulator 5-chloro-3-methly-4-nitro-1*H*-pyrazole in or on the raw agricultural commodity oranges at 0.1 part per million (ppm). This tolerance was established in response to a pesticide petition (PP 5G1579) submitted by Abbott Laboratories, Agricultural and Veterinary Products Div., North Chicago, IL 60004. This renewal expired April 30, 1977. The State of Florida, Department of Citrus, 1115 E. Memorial Blvd., Lakeland, FL 33802, for whom this program is now authorized, requested a one-year renewal of this temporary tolerance both to permit continued testing to obtain additional data and to permit the marketing of the above raw agricultural commodity when treated in accordance with the provisions of the experimental use permit 43808-EUP-1 (275-EUP-9 was issued to Abbott Laboratories) that has been renewed under the Federal Insecticide, Fungicide, and Rodenticide Act (FIFRA), as amended in 1972, 1975, and 1978 (92 Stat. 819; 7 U.S.C. 136).

The scientific data reported and all other relevant material were evaluated, and it was determined that a renewal of the temporary tolerance would protect the public health. Therefore, the temporary tolerance has been renewed on condition that the pesticide be used in accordance with the experimental use permit with the following provisions:

1. The total amount of the pesticide to be used must not exceed the quantity authorized by the experimental use permit.

2. The State of Florida must immediately notify the EPA of any findings from the experimental use that have a bearing on safety. The firm must also keep records of production, distribution, and performance and on request make the records available to any authorized officer or employee of the EPA or the Food and Drug Administration.

This renewal expires December 4, 1980. Residues not in excess of 0.1 ppm remaining in or on oranges after this expiration date will not be considered actionable if the pesticide is legally applied during the term of and in accordance with the provisions of the experimental use permit and temporary tolerance. This temporary tolerance may be revoked if the experimental use permit is revoked or if any scientific data or experience with this pesticide indicate such revocation is necessary to protect the public health. Inquiries concerning this notice may be directed to Mr. Robert Taylor, Product Manager 25, Registration Division (TS-767), Office of Pesticide Programs, 401 M Street, SW, Washington, DC 20460 (202/755-2196).

Dated: December 31, 1979.

Douglas D. Campt,

Director, Registration Division.

(Sec. 408(j) of the Federal Food, Drug, and Cosmetic Act (21 U.S.C. 346a(j))

[FR Doc. 80-720 Filed 1-9-80; 8:45 am]

BILLING CODE 6560-01-M

[FRL 1386-4; OPP-180374A]

California Department of Food and Agriculture; Issuance of Specific Exemption to Use Fenvalerate to Control Heliothis Species on Corn

AGENCY: Environmental Protection Agency (EPA), Office of Pesticide Programs.

ACTION: Issuance of specific exemption.

SUMMARY: EPA has granted a specific exemption to the California Department of Food and Agriculture (hereafter referred to as the "Applicant") to use fenvalerate to control *Heliothis* spp. on a maximum of 9,000 acres of sweet corn in Imperial, Riverside, and San Diego Counties, California. The specific exemption expires on December 31, 1979.

FOR FURTHER INFORMATION CONTACT: Emergency Response Section, Registration Division (TS-767), Office of Pesticide Programs, EPA, 401 M Street, S.W., Room: E-124, Washington, D.C. 20460, Telephone: 202/426-0223. It is suggested that interested persons telephone before visiting the EPA Headquarters, so that the appropriate files may be made conveniently available for review purposes.

SUPPLEMENTARY INFORMATION: According to the Applicant, infestations of *Heliothis* spp. are a newly developing pest problem. *Heliothis virescens* and *H. zea* migrate from cotton to corn after the cotton is defoliated. Damage from a single worm can make sweet corn unacceptable for the fresh market. The Applicant claims that all insecticides currently registered for use on sweet corn have also been used on cotton to control these pests with little effect, and that there are no currently registered pesticides that will give adequate control of them. The Applicant indicates that uncontrolled infestations could cause fifty percent damage of a corn crop valued at $3.8 million.

The Applicant availed itself of a crisis exemption for the use of fenvalerate and permethrin on April 25, 1979 and so notified the Administrator. Notification of this crisis exemption was published in the **Federal Register** on October 22, 1979 (44 FR 60813). Since treatment was expected to exceed fifteen days, the Applicant submitted a request for a specific exemption for continuation of this use of fenvalerate and permethrin. EPA has denied the request for use of permethrin because of a lack of residue data for the proposed use pattern.

EPA has determined that residues of fenvalerate in or on sweet corn and sweet corn grain are not likely to exceed 0.05 part per million (ppm) as a result of this use. A temporary tolerance of 0.05 ppm, which was established in connection with an experimental use permit, already exists for fenvalerate and has been judged adequate to protect the public health. EPA has imposed a restriction against the feeding of treated plant parts to livestock in order to prevent secondary residues of fenvalerate from exceeding the established 0.02 ppm tolerance in the meat, fat, and meat byproducts of cattle, goats, hogs, horses, and sheep. EPA anticipates no unreasonable hazard to the environment from this use of fenvalerate.

After reviewing the application and other available information, EPA has determined that (a) pest outbreaks of *Heliothis* spp. have occured; (b) there is no effective pesticide presently registered and available for use to control *Heliothis* spp. in California; (c) there are no alternative means of control, taking into account the efficacy and hazard; (d) significant economic problems may result if the *Heliothis* spp. are not controlled; and (e) the time available to mitigate the problems posed is insufficient for a pesticide to be registered for this use. Accordingly, the Applicant has been granted a specific exemption to use the pesticide noted above until December 31, 1979, to the extent and in the manner set forth in the application. The specific exemption is alos subject to the following conditions:

1. The product Pydrin (fenvalerate), EPA Reg. No. 201-401, may be applied. If an unregistered label is used, it must contain the identical applicable precautions and restrictions which appear on the registered label;

2. A maximum dosage rate of 0.2 pound active ingredient (a.i.) per acre may be used;

3. Available data indicate that the 0.1 pound a.i. rate should provide as good control as the 0.2 pound a.i. rate in most

situations. Therefore, in most instances the 0.1 pound a.i. rate should be recommended;

4. Applications are limited to 9,000 acres of sweet corn in the counties named above;

5. A maximum of ten applications may be made per season at 3- to 7-day intervals with a 2-day pre-harvest interval;

6. Application may be made by ground equipment in not less than 30 gallons of water or by air equipment in not less than 5 gallons of water;

7. The feeding of treated plant parts to livestock is prohibited;

8. Treated areas may not be planted to root crops for 12 months after the last application. Treated areas may not be planted to any other crop for 60 days after the last application;

9. Applications will be made by State-certified private or commercial applicators or persons under their direct supervision;

10. All applicable directions, restrictions, and precautions on the EPA-registered product label must be followed;

11. Fenvalerate should not be applied any closer to fish-bearing waters than indicated in the chart below:

Application method and height	Aerial (10 ft)			Ground (2 ft)		
Application rate (lbs. a.i. fenvalerate)	0.05	0.1	0.2	0.05	0.1	0.2
Freshwater (distance in feet)	1,847	2,779	3,950	369	556	790
Saltwater (distance in feet)	111	206	371	22	41	74

The Applicant is warned that applications closer than those allowed in the above chart may result in fish and/or other aquatic organism kills;

12. Fenvalerate is highly toxic to bees exposed to direct treatment or residues on crops or weeds. It may not be applied or allowed to drift to weeds in bloom on which an economically significant number of bees are actively foraging. Protective information may be obtained from the State Cooperative Extension Service;

13. Fenvalerate is extremely toxic to fish and aquatic vertebrates and invertebrates. It must be applied with care in areas adjacent to any body of water. It may not be applied when weather conditions favor runoff or drift. It must be kept out of lakes, streams, and ponds. Care must be taken to prevent contamination of water by the cleaning of equipment or disposal of wastes;

14. Only fields where registered alternatives have been applied and a knowledgeable expert determines that control has not been achieved may be treated under this exemption. Applications will be limited to those fields with at least 5 percent *Heliothis* spp. infestation after tasseling;

15. The EPA shall be immediately informed of any adverse effects resulting from the use of this pesticide in connection with this exemption;

16. Sweet corn and sweet corn grain with residue levels of fenvalerate not exceeding 0.05 ppm may enter into interstate commerce. The Food and Drug Administration, U.S. Department of Health, Education, and Welfare, has been advised of this action; and

17. The Applicant is responsible for insuring that all the conditions of this specific exemption are met and must submit a final report summarizing the results of this program by May 31, 1980.

(Sec. 18, Federal Insecticide, Fungicide, and Rodenticide Act (FIFRA), as amended in 1972, 1975, and 1978 (92 Stat. 819 (7 U.S.C. 136)))

Dated: December 31, 1979.

Douglas D. Campt,

Acting Deputy Assistant Administrator for Pesticide Programs.

[FR Doc. 80-714 Filed 1-9-80; 8:45 am]

BILLING CODE 6560-01-M

[FRL 1386-5; OPP-180395]

California Department of Food and Agriculture; Issuance of Specific Exemption to Use Trifluralin to Control Field Bindweed and Russian Thistle in Asparagus

AGENCY: Environmental Protection Agency (EPA), Office of Pesticide Programs.

ACTION: Issuance of specific exemption.

SUMMARY: EPA has granted a specific exemption to the California Department of Food and Agriculture (hereafter referred to as the "Applicant") to use trifluralin to control field bindweed and Russian thistle in 2,460 acres of asparagus in Monterey County, California. The specific exemption expires on March 31, 1980.

FOR FURTHER INFORMATION CONTACT: Emergency Response Section, Registration Division (TS-767), Office of Pesticide Programs, EPA, 401 M Street, SW., Room: E-124, Washington, D.C. 20460, Telephone: 202/426-0223. It is suggested that interested persons telephone before visiting EPA Headquarters, so that the appropriate files may be made conveniently available for review purposes.

SUPPLEMENTARY INFORMATION: According to the Applicant, Russian thistle and field bindweed are two of the most serious weed pests in asparagus. The Applicant estimated crop loss due to weed competition of up to 25 percent. In addition, the extensive root system of these two weeds makes from one to three additional irrigations necessary. Heavy weed growth also increases labor costs involved with hand harvesting. Problems with field bindweed and Russian thistle are most serious in Monterey County where approximately 2,460 acres of asparagus are grown and could result in a loss of $1,347,250, the Applicant states.

The only registered pesticide for control of field bindweed and Russian thistle is 2,4-D. However, 2,4-D only controls bindweed when it is in full bloom, and two or three applications are needed. The Applicant claimed that timing of the application is crucial since there are only two to three weeks from full bloom in late June until harvesting commences in July. If 2,4-D is applied early, the bindweed will not be controlled; if applied late, 2,4-D will cause twisting of the asparagus spear, according to the Applicant. In addition, moderate to high winds are typical of the Salinas Valley during spring and cause drift of 2,4-D to the adjacent susceptible crops. Generally there are only two to three hours when it is calm enough to apply 2,4-D and these are in the late evening. For the past two years, the Agriculture Commissioner has refused permits to allow the use of 2,4-D due to the winds.

The Applicant proposed to make two split applications totaling a maximum of two pounds trifluralin per acre. The 2,460 acres represent seven percent of California's total asparagus acreage and are in the area adjacent to crops sensitive to 2,4-D.

EPA has determined that residues of trifluralin in or on asparagus should not exceed 0.05 part per million (ppm) from the proposed use. This residue level has been judged adequate to protect the public health. EPA has also determined that the use of Treflan EC, which contains the active ingredient trifluralin,

should pose no unreasonable risk to the environment.

After reviewing the application and other available information, EPA has determined that (a) pest outbreaks of field bindweed and Russian thistle have occurred; (b) the only pesticide registered and available for use is not practical in the involved area in California; (c) there are no alternative means of control, taking into account the efficiency and hazard; (d) significant economic problems may result if fiels bindweed and Russian thistle are not controlled; and (e) the time available for action to mitigate the problem posed is insufficient for a pesticide to be registered for this use. Accordingly, the Applicant has been granted a specific exemption to use the pesticide noted above until March 31, 1980, to the extent and in the manner set forth in the application. The specific exemption is also subject to the following conditions:

1. Treflan EC (EPA Registration No. 1471-35) will be used to treat asparagus. If an unregistered label is used, it must contain the identical applicable precautions and restrictions which appear on the registered label;

2. Trifluralin applications are limited to asparagus fields, with neighboring 2,4-D sensitive crops, located in Monterey County;

3. A maximum of two pounds of actual trifluralin may be applied per acre per season. Applications may be either single at rates of 1 to 2 pounds active ingredient or split at rates of 0.5 to 1 pound active ingredient per acre;

4. A 30-day pre-harvest interval must be observed;

5. All applicable directions and precautions on the EPA-registered product label must be followed;

6. Residues of trifluralin resulting from this use should not exceed 0.05 ppm, a level which has been determined adequate to protect the public health. The Food and Drug Administration, U.S. Department of Health, Education, and Welfare, has been notified of this action;

7. The Applicant is responsible for ensuring that all of the provisions of this specific exemption are met and must submit a report summarizing the results of this program by September 30, 1980; and

8. The EPA shall be immediately informed of any adverse effect resulting from the use of trifluralin in connection with this exemption.

(Section 18 of the Federal Insecticide, Fungicide, and Rodenticide Act (FIFRA), as amended in 1972, 1975, and 1978 (92 Stat. 819; 7 U.S.C. 136))

Douglas D. Campt,

Acting Deputy Assistant Administrator for Pesticide Programs.

[FR Doc. 80-715 Filed 1-9-80; 8:45 am]

BILLING CODE 6560-01

[FRL 1387-4; OPP-50447]

Florida Department of Citrus et al; Issuance of Experimental Use Permits

The Environmental Protection Agency (EPA) has issued experimental use permits to the following applicants. Such permits are in accordance with, and subject to, the provisions of 40 CFR Part 172, which defines EPA procedures with respect to the use of pesticides for experimental purposes.

No. 43808-EUP-1. Florida Department of Citrus, Lakeland, FL 33802. This experimental use permit allows the use of 1,867 pounds (quantity remaining from 3,000 pounds in original program) of the plant regulator 5-chloro-3-methyl-4-nitro-1*H*-pyrazole on oranges to evaluate the product as an abscission agent. A total of 500 acres is involved; the program is authorized only in the State of Florida. The experimental use permit is effective from December 4, 1979, to December 4, 1980. A temporary tolerance for residues of the active ingredient in or on oranges has been established. This program was previously authorized under experimental use permit No. 275-EUP-9 issued to Abbott Laboratories, North Chicago, IL 60064. (PM-25, Robert Taylor, Room: E-359, Telephone: 202/755-2196)

No. 3125-EUP-146. Mobay Chemical Corporation, Kansas City, MO 64120. This experimental use permit allows reallocation of 342 pounds of the insecticide 1-methylethyl 2-[[ethoxy[(1-methylethyl)amino]phosphinothioyl]oxy]benzoate on field corn to evaluate control of corn rootworm. A total of 2,500 acres is involved. The experimental use permit period was also extended and the permit is now effective from March 26, 1980 to August 1, 1980.

No. 3125-EUP-148. Mobay Chemical Corporation, Kansas City, MO 64120. This experimental use permit allows reallocation of 5,000 pounds of the insecticide 1-methylethyl 2-[[ethoxy[(1-methylethyl]amino]phosphinothioyl]oxy]]benzoate on field corn to evaluate control of corn rootworm. A total of 5,000 acres is involved. This program and the one above, (3125-EUP-146), are authorized only in the State of Colorado, Illinois, Indiana, Iowa, Kansas, Michigan, Minnesota, Missouri, Nebraska, New York, Ohio, Pennsylvania, South Dakota, Texas, Virginia, and Wisconsin. The experimental use permit period was also extended and the permit is now effective from March 26, 1980 to August 1, 1980. The permit will use the same active ingredient as 3125-EUP-146, above, but a different formulation: 3125-EUP-146 is for Oftanol 6 Emulsifiable Insecticide, 3125-EUP-148 is for Oftanol 20% Granular Insecticide. A temporary tolerance for residues of the active ingredient in or on corn grain (except popcorn) has been established. (PM-16, Room: E-343, Telephone: 202/426-9458)

Interested parties wishing to review the experimental use permits are referred to the designated Product Manager (PM), Registration Division (TS-767), Office of Pesticide Programs, EPA, 401 M Street, SW., Washington, D.C. 20460. The descriptive paragraph for each permit contains a telephone number and room number for information purposes. It is suggested that interested persons call before visiting the EPA Headquarters Office, so that the appropriate permit may be made conveniently available for review purposes. The files will be available for inspection from 8:30 a.m. to 4:00 p.m. Monday through Friday.

Sec. 5, Federal Insecticide, Fungicide, and Rodenticide Act (FIFRA), as amended in 1972, 1975, and 1978 (92 Stat. 819; (7 U.S.C. 136))

Dated: December 31, 1979.

Douglas D. Campt,

Director, Registration Division.

[FR Doc. 80-719 Filed 1-9-80; 8:45 am]

BILLING CODE 6560-01

[FR 1386-6; OPP-180393]

Idaho and Oregon Departments of Agriculture; Issuance of Specific Exemptions To Use Napropamide on Mint to Control Grassy Weeds

AGENCY: Environmental Protection Agency (EPA), Office of Pesticide Programs.

ACTION: Issuance of specific exemptions.

SUMMARY: EPA has granted specific exemptions to the Idaho and Oregon Departments of Agriculture (hereafter referred to as "Idaho," "Oregon," or the "Applicants") to use napropamide on 12,000 acres of peppermint and spearmint in Idaho and on 7,000 acres of peppermint and spearmint in Malheur County, Oregon. The specific exemptions expire on December 31, 1979.

FOR FURTHER INFORMATION CONTACT: Emergency Response Section, Registration Division (TS-791), Office of Pesticide Programs, EPA, 401 M Street, SW., Room: E-124, Washington, D.C. 20460, Telephone 202/426-0223. It is suggested that interested persons telephone before visiting EPA

Headquarters, so that the appropriate files may be made conveniently available for review purposes.

SUPPLEMENTARY INFORMATION: According to the Applicants, barnyard grass and green and yellow foxtail are serious weed pests in mint grown by furrow irrigation. Weed competition during the growing season reduces yields and the quality of the oil and affects recovery of the mint after harvest to the extent that the crop is weakened. This results in winter kill and poor stands of mint the succeeding year. The Applicants claim that currently registered herbicides either provide inadequate control or are phytotoxic to the furrow-irrigated mint grown in these areas. Data indicate that napropamide would be an effective alternative for control of grassy weeds in mint.

Idaho estimates that uncontrolled grassy weed infestations could result in a loss of an excess of $1 million to Idaho mint growers. Oregon estimates that mint growers in Malheur County could lose an estimated $2 million due to these weeds.

The Applicants plan to make a single application of Devrinol 50–WP (napropamide) using ground equipment. They will use four pounds active ingredient (a.i.) in 20 to 100 gallons of water per acre.

EPA has determined that residues of napropamide (N,N-diethyl-2-(1-naphthalenyloxy)propionamide) from the proposed use are not expected to exceed 0.1 part per million (ppm) in the fresh mint hay, oil, and spent mint hay. This level is not expected to present any overt hazard and has been judged adequate to protect the public health. While EPA is unable to evaluate the hazard to applicators because of existing data gaps, it has been determined that there will be negligible incremental risk associated with these specific exemptions since: (1) Devrinol 50–WP has been registered for a number of years for use on citrus, nuts, pome fruits, small fruits, stone fruits, vegetables, and tobacco without development of any known applicator hazards; (2) most registered uses involve the same rates and mixing and application technique as recommended in this requested use on mint; (3) the product is not restricted; and (4) treatment of the requested acreage will result in negligible applicator exposure when compared to the acreage planted to crops for which Devrinol 50–WP is registered. The proposed use should not pose an unreasonable hazard to the environment.

After reviewing the applications and other available information, EPA has determined that (a) pest outbreaks of grassy weeds in mint have occurred in Idaho and Oregon; (b) there is no effective pesticide presently registered and available for use to control these weeds in Idaho and Oregon; (c) there are no alternative means of control, taking into account the efficacy and hazard; (d) significant economic problems may result if the weeds are not controlled; and (e) the time available for action to mitigate the problems posed is insufficient for a pesticide to be registered for this use. Accordingly, the Applicants have been granted specific exemptions to use the pesticide noted above until December 31, 1979, to the extent and in the manner set forth in the applications. The specific exemptions are also subject to the following conditions:

1. The product Devrinol 50–WP, EPA Reg. No. 476–2108, manufactured by Stauffer Chemical Co., is authorized. If an unregistered label is used, it must contain the identical applicable precautions and restrictions which appear on the registered label;

2. Devrinol will be applied by ground equipment at a rate of 4 pounds a.i. in 20 to 100 gallons of water per acre;

3. A maximum of 12,000 acres may be treated throughout Idaho. 7,000 acres may be treated in Malheur County, Oregon;

4. A maximum of 48,000 pounds a.i. may be applied in Idaho. A maximum of 28,000 pounds a.i. may be applied in Oregon;

5. All applications will be made by State-licensed commercial applicators of growers using their own equipment;

6. All applicable directions, restrictions, and precautions on the EPA-registered product label must be followed;

7. Devrinol 50–WP must be kept out of lakes, streams, and ponds. Care must be taken to prevent contamination of water by the cleaning of equipment or disposal of wastes;

8. This pesticide may not be applied in the vicinity of apiaries nor may it be allowed to drift to weeds in bloom on which significant numbers of bees are actively foraging;

9. Treatment of mint as proposed should not result in residues of napropamide exceeding 0.1 ppm in or on fresh mint hay, oil, and spent mint hay. These commodities with residues not exceeding that level may enter interstate commerce. The Food and Drug Administration, U.S. Department of Health, Education, and Welfare, has been advised of this action;

10. The EPA shall be immediately informed of any adverse effects resulting from the use of this pesticide in connection with these exemptions; and

11. The Applicants shall be responsible for assuring that all provisions of their respective specific exemptions are met and each must submit a report summarizing the results of its program by June 30, 1980.

(Sec. 18, Federal Insecticide, Fungicide, and Rodenticide Act (FIFRA), as amended in 1972, 1975, and 1978 (92 Stat. 819; (7 U.S.C. 136)).

Dated: December 31, 1979.

Douglas D. Campt,

Acting Deputy Assistant Administrator for Pesticide Programs.

[FR Doc. 80–716 Filed 1–9–80; 8:45 am]

BILLING CODE 6560–01–M

[FRL 1388–5]

Indianapolis Power & Light Co.; Final Determination

In the matter of the proceedings under Title I, Part C of the Clean Air Act (Act), as amended, 42 U.S.C. 7401 *et seq.*, and the Federal regulations promulgated thereunder at 40 CFR 52.21 (43 FR 26388, June 19, 1978) for Prevention of Significant Deterioration of Air Quality (PSD), relating to Indianapolis Power & Light Company.

On March 29, 1977, Indianapolis Power & Light Company submitted an application to the United States Environmental Protection Agency (U.S. EPA), Region V office, for an approval to construct the Patriot (formerly Mexico Bottom) Generating Station near Patriot, Indiana. The application was submitted pursuant to the regulations for PSD and was considered complete as of October 3, 1977.

On February 3, 1978, the U.S. EPA proposed to approve the Indianapolis Power Light Company application. A public hearing and further study of the 1978. Based on information received at the hearing and further study of the application, U.S. EPA denied Indianapolis Power & Light Company permission to construct on August 7, 1978. Indianapolis Power & Light Company appealed the denial to the U.S. Court of Appeals ordered U.S. EPA to review new data received from the company and rule on the ability of the proposed scrubbers to meet the emission limitations.

On July 13, 1979, Indianapolis Power & Light Company submitted information to U.S. EPA which contained specific scrubber design parameters. These parameters included:

1. liquid to gas ratios
2. number of scrubber modules
3. pH of scrubbing liquor
4. exhaust gas temperature and velocity

U.S. EPA reviewed these design parameters and information previously submitted by Indianapolis Power & Light concerning the type of coal to be burned and was able to determine that emissions of sulfur dioxide could be controlled to 0.55 lbs. of SO_2 per million BTU heat input by the limestone scrubbing system selected by Indianapolis Power & Light Company. The specific scrubber design parameters were not included in the original application for approval to construct.

In addition, U.S. EPA reviewed all the air quality data present in the record as of August 7, 1978, to determine if there were violations of the PSD increments or the air quality standards. The review showed that emissions from the Patriot plant would not violate either the PSD increments or the air quality standards.

The court precluded the receipt of additional air quality data, but authorized additional consideration of data in the record. On August 23, 1979, preliminary approval was granted.

On September 20, 1979, U.S. EPA published notice of its decision in the *Vevay Reveille-Enterprise* and *Kentucky Post* to grant a preliminary approval to Indianapolis Power & Light Comapny. Several comments were received and a public hearing was requested as a result of the preliminary approval. On October 18, 1979, U.S. EPA conducted the hearing in the Switzerland County Court House, in Vevay, Indiana.

After review and analysis of all materials submitted by Indianapolis Power & Light Company, the public record established at the hearing, and written comments, U.S. EPA has determined that the proposed new construction in Switzerland County, Indiana, would be utilizing the best available control technology and that emissions from the facility will not violate applicable air quality increments or standards as required by Section 165 of the Act. A copy of U.S. EPA's response to public comments is available at the Region V office or in the Switzerland County Public Library, Ferry Street, Vevay, Indiana.

This approval to construct does not relieve Indianapolis Power & Light Company of the responsibility to comply with the control strategy and all local, State and Federal regulations which are part of the applicable State Implementation Plan, as well as all other applicable Federal, State and local requirements.

This determination may now be considered final agency action which is locally applicable under Section 307(b)(1) of the Act and therefore, a petition for review may be filed in the U.S. Court of Appeals for the Seventh Circuit by any appropriate party. In accordance with Section 307(b)(1), petitions for review must be filed sixty days from the date of this notice.

For further information contact Eric Cohen, Chief, Compliance Section, Region V, U.S. EPA, 230 South Dearborn Street, Chicago, Illinois 60604, (312) 353-2090.

John McGuire,

Regional Administrator, Region V.

[FR Doc. 80-776 Filed 1-9-80; 8:45 am]

BILLING CODE 6560-01

[OPP-180400; FRL 1388-7]

Massachusetts Department of Food and Agriculture; Crisis Exemption To Use Permethrin and Fenvalerate on Potatoes To Control Colorado Potato Beetle

AGENCY: Environmental Protection Agency (EPA), Office of Pesticide Programs.

ACTION: Notice of temporary crisis exemption.

SUMMARY: EPA gives notice that on July 6, 1979, the Massachusetts Department of Food and Agriculture (hereafter referred to as "Massachusetts") availed itself of a crisis exemption to use permethrin and fenvalerate on 4,000 acres of potatoes in Massachusetts for control of the Colorado potato beetle. Since treatment was expected to exceed fifteen days, Massachusetts requested a specific exemption for continuation of this program.

FOR FURTHER INFORMATION CONTACT: Emergency Response Section, Registration Division (TS-767), Office of Pesticide Programs, EPA, 401 M Street, S.W., Room: E-124, Washington, D.C. 20460, Telephone: 202/426-0223. It is suggested that interested persons telephone before visiting the EPA Headquarters, so that the appropriate files may be made conveniently available for review purposes.

SUPPLEMENTARY INFORMATION: According to Massachusetts, the Colorado potato beetle is the principal insect pest of potatoes and annually occurs in destructive numbers. Massachusetts stated that potato growers have experienced severe economic losses due to this pest. Massachusetts claimed that presently registered pesticides were giving poor control of the Colorado potato beetle and that there was no time to initiate a specific exemption request.

Massachusetts made a maximum of seven applications of fenvalerate or permethrin at a dosage rate of 0.1—0.2 pound active ingredient per acre in spray mixture volumes of 20-100 gallons of water. State-certified applicators made the applications using ground or air equipment. A seven-day preharvest interval was to be observed. Since permethrin and fenvalerate are toxic to birds, bees, fish, and wildlife, the insecticides were not to be applied where residues were likely to run off into a body of water. They were not to be applied when conditions favored drift from treated areas. Massachusetts requested a specific exemption to continue this program until September 1, 1979.

(Section 18 of the Federal Insecticide, Fungicide, and Rodenticide Act (FIFRA), as amended in 1972, 1975, and 1978 (92 Stat. 819; 7 U.S.C. 136)).

Dated: December 31, 1979.

Douglas D. Campt,

Acting Deputy Assistant Administrator for Pesticide Programs.

[FR Doc. 80-777 Filed 1-9-80; 8:45 am]

BILLING CODE 6560-01-M

[FRL 1386-8; OPP-180399]

Massachusetts Department of Food and Agriculture; Crisis Exemption To Use Permethrin and Fenvalerate on Tomatoes To Control Colorado Potato Beetle

AGENCY: Environmental Protection Agency (EPA), Office of Pesticide Programs.

ACTION: Notice of temporary crisis exemption.

SUMMARY: EPA gives notice that on July 6, 1979, the Massachusetts Department of Food and Agriculture (hereafter referred to as "Massachusetts") availed itself of a crisis exemption to use permethrin and fenvalerate on 700 acres of tomatoes in Massachusetts for control of the Colorado potato beetle. Since treatment was expected to exceed fifteen days, Massachusetts requested a specific exemption for continued use of permethrin.

FOR FURTHER INFORMATION CONTACT: Emergency Response Section, Registration Division (TS-767), Office of Pesticide Programs, EPA, 401 M Street, SW., Room: E-124, Washington, D.C. 20460, Telephone: 202/426-0223. It is suggested that interested persons telephone before visiting the EPA Headquarters, so that the appropriate files may be made conventiently available for review purposes.

SUPPLEMENTARY INFORMATION: According to Massachusetts, the Colorado potato beetle is the principal insect pest of tomatoes and annually occurs in destructive numbers. Massachusetts stated that tomato growers have experienced severe economic losses due to this pest. Massachusetts claimed that presently registered pesticides were giving poor control of the Colorado potato beetle and that there was no time to initiate a specific exemption request.

Massachusetts made a maximum of five applications of fenvalerate or permethrin at a dosage rate of 0.1–0.2 pound active ingredient per acre in spray mixture volumes of 20–100 gallons of water. State-certified applicators made the applications using ground equipment. A one-day pre-harvest interval was to be observed. Since permethrin and fenvalerate are toxic to birds, bees, fish, and wildlife, the insecticides were not to be applied where residues were likely to run off into a body of water. They were not to be applied when conditions favored drift from treated areas. Massachusetts requested a specific exemption to continue use of permethrin under this program until September 1, 1979.

(Sec. 18, Federal Insecticide, Fungicide, and Rodenticide Act (FIFRA), as amended in 1972, 1975, and 1978 (92 Stat. 819; (7 U.S.C. 136)).

Dated: December 31, 1979.

Douglas D. Campt,

Acting Deputy Assistant Administrator for Pesticide Programs.

[FR Doc. 80-717 Filed 1-9-80; 8:45 am]

BILLING CODE 6560-01-M

[FRL 1387-6; PP 8G2025/T226]

Mobay Chemical Corp.; Extension of Temporary Tolerances

On April 19, 1979, the Environmental Protection Agency (EPA) announced (44 FR 23307) the establishment of temporary tolerances for combined residues of the insecticide 1-methylethyl 2-[[ethoxy[(1-methylethyl)amino]phosphinothioyl]oxy]benzoate and its cholinesterase-inhibiting metabolites in or on the raw agricultural commodities corn grain (except popcorn) and the meat, fat, and meat byproducts of cattle, goats, hogs, horses, poultry, and sheep at 0.1 part per million (ppm), and eggs and milk at 0.02 ppm. These tolerances were established in response to a pesticide petition (PP 8G2025) submitted by Mobay Chemical Corp., Chemagro Agricultural Div., PO Box 4913, Kansas City, MO 64120. These temporary tolerances expire March 26, 1980.

Mobay Chemical Corp. has requested a four-month extension of these temporary tolerances both to permit continued testing to obtain additional data and to permit the marketing of the above raw agricultural commodities when treated in accordance with the provisions of the experimental use permits 3125-146 and 3125-148 that have been extended under the Federal Insecticide, Fungicide, and Rodenticide Act (FIFRA), as amended in 1972, 1975, and 1978 (92 Stat. 819; 7 U.S.C. 136).

The scientific data reported and all other relevant material were evaluated, and it was determined that extension of the temporary tolerances would protect the public health. Therefore, the temporary tolerances have been extended on condition that the pesticide be used in accordance with the experimental use permits with the following provisions:

1. The total amount of the pesticide to be used must not exceed the quantity authorized by the experimental use permits.

2. Mobay Chemical Corp. must immediately notify the EPA of any findings from the experimental use that have a bearing on safety. The firm must also keep records of production, distribution, and performance and on request make the records available to any authorized officer or employee of the EPA or the Food and Drug Administration.

These temporary tolerances expire August 1, 1980. Residues not in excess of 0.1 ppm remaining in or on corn grain (except popcorn) and the meat, fat, and meat byproducts of cattle, goats, hogs, horses, poultry, and sheep and 0.02 ppm remaining in eggs and milk after this expiration date will not be considered actionable if the pesticide is legally applied during the term of and in accordance with the provisions of the experimental use permits and temporary tolerances. These temporary tolerances may be revoked if the experimental use permits are revoked or if any scientific data or experience with this pesticide indicate such revocation is necessary to protect the public health. Inquiries concerning this notice may be directed to Mr. William Miller, Product Manager 16, Registration Division (TS-767), Office of Pesticide Programs, 401 M Street, SW, Washington, DC 20460 (202/426-9458).

(Sec. 408(j), Federal Food, Drug, and Cosmetic Act (21 U.S.C. 346a(j)))

Dated: December 31, 1979.

Douglas D. Campt,

Director, Registration Division.

[FR Doc. 80-721 Filed 1-9-80; 8:45 am]

BILLING CODE 6560-01-M

[1386-7; OPP-180397]

Oregon Department of Agriculture; Issuance of Specific Exemption To Use Diclofop-methyl To Control Italian Ryegrass and Wild Oats in Wheat Fields

AGENCY: Environmental Protection Agency (EPA), Office of Pesticide Programs.

ACTION: Issuance of specific exemption.

SUMMARY: EPA has granted a specific exemption to the Oregon Department of Agriculture (hereafter referred to as the "Applicant") to use diclofop-methyl to control Italian ryegrass and wild oats in 133,000 acres of winter wheat in eleven counties in western Oregon. The specific exemption expires on April 30, 1980.

FOR FURTHER INFORMATION CONTACT: Emergency Response Section, Registration Division (TS-767), Office of Pesticide Programs, EPA, 401 M Street, SW., Room: E-124, Washington, D.C. 20460, Telephone: 202/426-0223. It is suggested that interested persons telephone before visiting EPA Headquarters, so that the appropriate files may be made conveniently available for review purposes.

SUPPLEMENTARY INFORMATION: According to the Applicant, both Italian ryegrass *(Lolium multiflorum)* and wild oats *(Avena fatua)* are widespread weed problems in Oregon. Italian ryegrass reportedly grows primarily west of the Cascade Mountains, while wild oats infest small grains throughout the State.

The Applicant stated that the following five herbicides currently registered for use on wheat to control Italian ryegrass or wild oats do not provide adequate control under western Oregon's growing conditions. (1) Triallate is not registered for the control of ryegrass but gives some control of that weed when it is applied to control wild oats. The main problem with this herbicide is that it must be mechanically incorporated into the soil soon after application. With high rainfall, this becomes impossible. Also, if it could be incorporated, it reportedly gives very poor weed control in wet soil. (2) Difenzoquat is effective only against wild oats and requires strong wheat competition to be effective. (3) Timing of the application of barban is critical, but application cannot always be made at the proper time because of rainfall.

There have also been reports of phytotoxicity to wheat in connection with this herbicide, and the degree of control achieved is not sufficient. (4) Diuron gives only 50% or less control of ryegrass when the weed density is high. It is ineffective against wild oats. (5) Triflurlin is limited to preplant soil incorporation and high rainfall severely curtails its use.

Oregon has experienced extreme weather in the past few years. In 1977, a drought destroyed approximately 9% of the expected wheat crop throughout the State. Beginning in mid-August, 1978, heavy rains throughout the State caused losses of up to 15 million bushels of wheat, a $6 million loss in the Willamette Valley, one of the hardest hit areas. The Governor declared the State a disaster area. Normally the Willamette Valley yields 80–85 bushels of wheat per acre; in 1978, yield was 40–45 bushels. The applicant has estimated that western Oregon wheat growers can expect benefits amounting to nearly $8 million with the use of diclofop-methyl.

The Applicant requested the use of Hoelon 3EC (active ingredient (a.i.) diclofop-methyl) because in field tests this herbicide has increased wheat yield over presently registered herbicides by 40 to 50 bushels per acre when densities of ryegrass were high. A maximum of 100,000 pounds a.i. would be applied to wheat in the eleven western counties of Oregon: Benton, Clackamas, Columbia, Douglas, Lane, Linn, Marion, Multnomah, Polk, Washington, and Yamhill. State-licensed commercial or private applicators would apply diclofop-methyl at a dosage rate of between 0.75 pound a.i. to 1.25 pounds a.i. per acre using ground or aerial equipment.

EPA has determined that the proposed use will not result in residues of diclofop-methyl and its metabolites in excess of 0.1 part per million (ppm). This level has been judged adequate to protect the public health. Applicators will be required to wear protective clothing and respirators.

A restriction on the grazing or foraging of treated land and a prohibition against the use of treated hay or straw as animal feed have been imposed. Since diclofop-methyl is acutely toxic to fish, EPA has imposed a restriction which would prohibit the application of diclofop-methyl within 100 feet of any aquatic habitat.

After reviewing the application and other available information, EPA has determined that (a) pest outbreaks of Italian ryegrass and wild oats have occurred; (b) the pesticides registered for this use do not provide adequate control of Italian ryegrass and wild oats in western Oregon; (c) there are no alternative means of control, taking into account the efficacy and hazard; (d) significant economic problems may result if Italian ryegrass and wild oats are not controlled; and (e) the time available for action to mitigate the problems posed is insufficient for a pesticide to be registered for this use. Accordingly, the Applicant has been granted a specific exemption to use the pesticide noted above until April 30, 1980, to the extent and in the manner set forth in the application. The specific exemption is also subject to the following conditions:

1. The American Hoechst product Hoelon 3EC, which contains the a.i. diclofop-methyl, is authorized at the following dosage rates and methods of application:

Ground Equipment: 2 to 3.3 pints of product (0.75 to 1.25 pounds a.i.)/ minimum of 10 gallons of water/acre per season;

Aerial Equipment: 2 to 3.3 pints of product (0.75 to 1.25 pounds a.i.)/ minimum of 5 gallons of water/acre per season;

2. Applications of diclofop-methyl are authorized in the counties named above;

3. Up to 100,000 pounds of a.i. diclofop-methyl are authorized;

4. One laboratory study with mice indicated that diclofop-methyl may be oncogenic. Because of uncertainty relating to the oncogenic potential of diclofop-methyl, the Applicant shall be responsible for assuring that all workers who will come into contact with this material through pesticide applications and related agricultural operations are fully advised of the uncertainty of the oncogenicity situation prior to any exposure to the material. In addition, the following precautions must be taken: (a) Applications are to be made only by State-certified commercial and private applicators; (b) the following protective apparel must be worn during all loading and mixing operations of diclofop-methyl and when diclofop-methyl is applied with ground equipment: gloves, waterproof boots, impermeable pants and shirts, goggles, and a cartridge-type respirator; (c) aerial pilots are not to be involved in the mixing and loading of diclofop-methyl unless the aforementioned equipment is worn. Pilots must wear a cartridge-type respirator when applying diclofop-methyl;

5. Applications of diclofop-methyl shall be made only when a knowledgeable expert determines that densities of Italian ryegrass and/or wild oats are at a level where the use of herbicides registered for use on wheat to control those weeds is not likely to provide sufficient economic control of those weeds. Such knowledgeable experts may be Oregon State University personnel or licensed pesticide consultants not engaged in the sale of pesticides;

6. Diclofop-methyl is highly toxic to fish. It must be kept out of lakes, streams, ponds, tidal marshes, and estuaries. Direct applications or drift of spray material to water surfaces must be avoided. It may not be applied within 100 feet of aquatic habitats or within 100 feet of any vegetable, corn, or milo crop. Aerial applications may not be made when wind velocity is above five miles per hour. Care must be taken to avoid contamination of arable land or water by the cleaning of equipment or disposal of waste;

7. The Applicant must set up a monitoring program to prevent adverse effects to aquatic habitats and non-target border vegetation. The EPA shall be informed of any adverse effects resulting from the use of diclofop-methyl under this specific exemption;

8. Fields treated with diclofop-methyl must not be grazed or foraged. Likewise wheat hay or straw must not be fed to livestock;

9. Wheat grain with residues of diclofop-methyl not exceeding 0.1 ppm may enter interstate commerce. The Food and Drug Administration, U.S. Department of Health, Education, and Welfare, has been advised of this action; and

10. The Applicant is responsible for ensuring that all of the provisions of this specific exemption are met and must submit a full report which summarizes the amounts of diclofop-methyl used and the economic benefits derived, as a result of this specific exemption, to the EPA by October 31, 1980.

(Sec. 18, Federal Insecticide, Fungicide, and Rodenticide Act (FIFRA), as amended in 1972, 1975, and 1978 (92 Stat. 819; (7 U.S.C. 136)).

Dated: December 31, 1979.

Douglas D. Campt,

Acting Deputy Assistant Administrator for Pesticide Programs.

[FR Doc. 80-718 Filed 1-9-80; 8:45 am]

BILLING CODE 6560-01-M

[OPP-180396; FRL 1386-8]

Oregon and Washington Departments of Agriculture; Issuance of Specific Exemptions To Use Propham To Control Cheatgrass and Volunteer Grain in Fallow Wheat Fields

AGENCY: Environmental Protection Agency (EPA), Office of Pesticide Programs.

ACTION: Issuance of specific exemptions.

SUMMARY: EPA has granted specific exemptions to the Oregon and Washington Departments of Agriculture (hereafter referred to as "Oregon," "Washington," or the "Applicants") to use propham to control cheatgrass (downy brome) and volunteer grass in 100,000 acres of fallow wheat fields in each State. The specific exemptions expire on March 1, 1980.

FOR FURTHER INFORMATION CONTACT: Emergency Response Section, Registration Division (TS-767), Office of Pesticide Programs, EPA, 401 M Street, S.W., Room: E-124, Washington, D.C. 20460, Telephone: 202/426-0223. It is suggested that interested persons telephone before visiting EPA Headquarters, so that the appropriate files may be made conveniently available for review purposes.

SUPPLEMENTARY INFORMATION: According to the Applicants, wheat fields are allowed to remain fallow every other year in Oregon and Washington in order to conserve the limited amount of moisture for the subsequent wheat crop. Research and grower practice have demonstrated that it is important to control weed growth in fallow fields since weed growth utilizes moisture and requires excessive tillage or cultivation prior to planting. Minimum tillage is an important agricultural practice in these areas since the light, sandy soils are subject to wind and water erosion. Growers normally attempt to leave at least twenty percent of the previous crop residue on the soil surface in order to reduce soil erosion.

This year's heavier than normal rain in August and September has enabled germination and establishment of cheatgrass and volunteer grain many months earlier than in previous years. These weeds utilize large amounts of moisture and require residue-destroying tillages to control them. The Applicants claim that the use of propham (isopropyl carbanilate) would control the weeds during the non-crop year, and allow the past year's crop residue to control erosion since tilling would not be required.

Under conditions that exist this year, the Applicants feel that the alternative registered pesticides, atrazine, cyanazine, glyphosate, and paraquat, will not provide effective control of weed pests for a variety of reasons. They claim that these pesticides (1) may work for one of the weeds but not the other, (2) are effective only when used on the growing plants, (3) can be applied by ground equipment only and in the affected area there is limited available equipment, (4) require multiple, cost-prohibitive applications, or (5) are not recommended for use on soils with low organic content, which is the condition of the soils to be treated.

The Applicants estimate the loss of five bushels of wheat per acre of untreated fields. In Oregon the monetary loss could come to $2 million and in Washington it could come to $2.1 million. Washington also claims that future productivity may be reduced by the loss of up to 100 tons of top soil per acre as a result of wind and water erosion if growers must resort to tillage to control the weeds.

The Applicants propose to make a single pre- or post-emergence application of Chem Hoe 135 FL3 (propham formulated with PG-124, an inert ingredient) using ground or air equipment. Oregon will apply a maximum of 300,000 pounds active ingredient (a.i.) at a rate of three pounds a.i. per acre in Gilliam, Morrow, Sherman, Umatilla, and Wasco Counties. Washington will apply a maximum of 400,000 pounds a.i., in the Washington counties east of the crest of the Cascade Mountains, at a rate of three to four pounds a.i. per acre depending on soil type if pre-emergence, or stage or weed growth if post-emergence. Treated fields will be planted to wheat in the fall of 1980.

EPA has established interim tolerances for residues of propham on various agricultural crops at rates ranging from 0.05 part per million (ppm) to 2 ppm. EPA has concluded that residue levels of propham from the proposed use are not likely to exceed 0.1 ppm in or on wheat grain or straw and that residues of PPG-124 should not exceed 0.1 ppm in or on wheat grain and 0.3 ppm in or on wheat straw. These levels have been judged adequate to protect the public health. Unreasonable adverse effects to fish and wildlife are not anticipated.

After reviewing the applications and other available information, EPA has determined that (a) pest outbreaks of cheatgrass and volunteer grains have occurred; (b) there is no effective pesticide presently registered and available for use to control these pests in Oregon and Washington; (c) there are no alternative means of control, taking into account the efficacy and hazard; (d) significant economic problems may result if the pests are not controlled; and (e) the time available for action to mitigate the problems posed is insufficient for a pesticide to be registered for this use. Accordingly, the Applicants have been granted specific exemptions to use the pesticide noted above until March 1, 1980. The specific exemptions are also subject to the following conditions:

1. The product Chem Hoe 135 FL3 may be applied at a rate of three pounds a.i. per acre in Oregon to soils with an organic content of one percent or less, and three to four pounds a.i. per acre in Washington;

2. A single application to fallow wheat fields is authorized;

3. Ground application will be made in a minimum of 20 gallons of water, and aerial application will be made in five to ten gallons of water;

4. All applications of propham are limited to fallow fields that will be planted to wheat during the fall of 1980;

5. A maximum of 100,000 acres may be treated in each State;

6. Applications shall be made by State-licensed commercial applicators or qualified growers;

7. All applicable directions, restrictions, and precautions on the product label will be observed;

8. Precautions will be taken to avoid or minimize spray drift to non-target areas;

9. This use of propham is not expected to result in either residues of proham in wheat grain, straw, or forage in excess of 0.1 ppm or residues of p-chlorophenyl N-methylcarbamate and its metabolites (calculated as the parent compound) in wheat grain in excess of 0.1 ppm and in wheat straw in excess of 0.3 ppm. Wheat grain and straw with residues that do not exceed these levels may be offered in interstate commerce. The Food and Drug Administration, U.S. Department of Health, Education, and Welfare, has been advised of this action. Existing tolerances are adequate to cover secondary residues in meat and milk;

10. The EPA shall be immediately informed of any adverse effects to man or the environment resulting from the use of propham in connection with this exemption; and

11. Each of the Applicants is responsible for assuring that all of the provisions of its specific exemption are met in the State and must submit a report summarizing the results of this program by June 15, 1980.

(Section 18 of the Federal Insecticide, Fungicide, and Rodenticide Act (FIFRA), as amended in 1972, 1975, and 1978 (92 Stat. 819; 7 U.S.C. 136))

Dated: December 31, 1979.

Douglas D. Campt,

Acting Deputy Assistant Administrator for Pesticide Programs.

[FR Doc. 80-778 Filed 1-9-80; 8:45 am]

BILLING CODE 6560-01-M

[FRL 1387-2]

Science Advisory Board; Technology Assessment and Pollution Control Advisory Committee Fundamentals of Combustion Research Group

Open Meeting

Under Pub. L. 92-463, notice is hereby given that a meeting of an *ad hoc* group of the Technology Assessment and Pollution Control Advisory Committee (TAPCAC) of the Science Advisory Board dealing with fundamentals of combustion research will be held at the University of California at Irvine on Saturday, January 26, starting at 9:00 A.M. in room 331 of the Engineering building (adjacent to parking lot 18). This meeting is open to the public.

The purpose of the meeting will be to review for advisory comment the combustion fundamentals extramural research program managed by the Agency's Industrial Environmental Research Laboratory (IERL) at Research Triangle Park, NC. Information for the review will be obtained from the IERL program manager (via a prepared briefing book) and from the presentations of a certain number of the program's extramural researchers.

Because seating capacity is limited, persons desiring to attend must pre-register and be given a confirmed reservation by the Acting Executive Secretary of TAPCAC, Mr. William McCarthy. He may be reached at (202) 472-9458. Deadline for pre-registration is close of business, Friday, January 18, 1980.

Richard M. Dowd,

Staff Director, Science Advisory Board.

[FR Doc. 80-722 Filed 1-9-80; 8:45 am]

BILLING CODE 6560-01-M

[OPP-180333; FRL 1363-3]

Montana Department of Livestock; Issuance of Specific Exemption for Use of Strychnine Baits for Control of Rabid Skunks

Correction

In FR Doc. 79-35873, appearing at page 66988 in the issue for Wednesday, November 21, 1979, in the **SUMMARY** paragraph, the last line should read only "1980.".

BILLING CODE 1505-01-M

FEDERAL COMMUNICATIONS COMMISSION

Hangtown Broadcasters, et al.; Hearing Designation Order Designating Applications for Consolidated Hearing on Stated Issues

Adopted: December 21, 1979.

Released: January 9, 1980.

In re applications of David W. Evans, Paul E. Gregg, Ross Shelton, and Nevin Smith d.b.a Hangtown Broadcasters, Placerville, California, BC Docket No. 79-344, File No. BPH-11041; Req: 92.1 MHz, Channel 221A, 3.0 kW (H&V), 300 feet; Placerville Broadcasting Inc., Placerville, California; BC Docket No. 79-345, File No. BPH-780829AA; Req: 92.1 MHz, Channel 221A, 3.0 kW (H&V), 300 feet; Chris Warren Kidd and John Richmond Ogden d.b.a, Kidd Broadcasting Company, Placerville, California; BC Docket No. 79-346, File No. BPH-780831AJ; Req; 92.1 MHz, Channel 221A, 0.68 kW (H&V), 569 feet; For Construction Permits.

1. The Commission, by the Chief, Broadcast Bureau, acting pursuant to delegated authority, has under consideration the above-captioned mutually exclusive applications of Hangtown Broadcasters (Hangtown), Placerville Broadcasting Inc. (PBI), and Kidd Broadcasting Company (Kidd), a petition to specify issues against Hangtown and PBI filed by Kidd,[1] and responsive pleadings.[2]

2. Hangtown, PBI, and Kidd have all failed to comply with the requirements of the *Primer on Ascertainment of Community Problems by Broadcast Applicants*, 27 FCC 2d 650, 21 RR 2d 1507 (1971). From the information before us, it appears that they have not adequately determined the composition of Placerville, California. Data available—although not submitted by the applicants—shows that 4.3% of the work force of El Dorado County in 1976 was of Hispanic-American heritage.[3] However, no applicant has indicated whether this group is significant in the city of Placerville, and none has interviewed any Hispanic-American leaders. Therefore, issues will be specified.

3. In its petition to specify issues, Kidd asserts that PBI has failed to interview leaders of certain economic interests noted in its compositional study: construction/mining, manufacturing, lumber and wood products, transportation, and public utilities. The mention of a particular element in a compositional study indicates only that it is present in a community, not necessarily that it is significant. See *Primer, supra,* Question and Answer 10. There is no basis for concluding that PBI's judgment in not selecting leaders of these particular interests was unreasonable. Further, interviews with leaders broadly representative of local business interests were held, and they appear adequate. Consequently, the alleged omissions do not appear fatal. However, the applicant's compositional study does seem to indicate that labor and agriculture are significant in Placerville, though PBI has not interviewed leaders of these elements. Thus, these two omissions must be explored. Next, Kidd faults PBI for using a "statistical sampling" to select leaders for interviews, rather than an individualized selection process. However, the *Primer* does not specify how leaders are to be selected; the only test of the selection process is whether the leaders interviewed reflect the composition of the community. *Primer, supra,* Question and Answer 13(a). Thus, Kidd's objection is groundless. Finally, Kidd claims that PBI has failed to list all problems mentioned in its surveys. Our examination reveals, however, that all non-frivolous problems have been listed in the application despite the applicant's assertion that only ten problems were listed in certain tabulations. Thus, the objection on this point is groundless.

4. The *Primer* requires an applicant either to ascertain the problems of major communities it undertakes to serve outside the city of license, by interviewing leaders who can be expected to have a broad overview of problems in their communities, or to explain why it chooses not to serve such communities. However, all but one of PBI's leader interviews were with persons identified by Placerville addresses.[4] Auburn (population 6,570) is within the proposed 1 mV/m contour and , considering the size of Placerville (5,416 in 1970), is a major community as contemplated by the *Primer.* As the applicant has neither interviewed appropriate leaders in Auburn nor explained why it does not intend to serve the community, an issue will be specified.

---

[1] The principal issues Kidd raised in its petition have been discussed in this Order. Other matters raised by Kidd are insignificant or have been mooted by subsequent amendments.

[2] Kidd also filed a petition to specify issues against Goldrush Media, Inc., a former applicant whose application has been dismissed. Although both of the Goldrush principals are now associated with Hangtown, no character issues were raised against them. Therefore, the petition is dismissed as moot.

[3] State of California, Employment Development Department, *California Manpower Information for Affirmative Action Programs,* November 1976.

[4] One resident of Placer Station was interviewed.

5. Analysis of the financial data submitted by Hangtown reveals that at least $63,213 will be required to construct the proposed station and operate for three months, itemized as follow:

Equipment down payment	$7,479
Equipment payments with interest	3,455
Land	1,000
Miscellaneous	30,750
Operating costs	20,529
Total	$63,213

Costs may be much greater, though, because of the uncertainty of Hangtown obtaining the expected credit from its equipment supplier. The latter's proposal letter does not contain an express or implicit statement that the supplier has examined and is satisfied with the applicant's current financial status. Therefore, we are not satisfied that this credit will be available. See *RA-AD of Soddy,* 56 FCC 2d 1055, 1058 (Rev. Bd. 1975). In addition to deferred equipment credit, Hangtown plans to finance construction and operation with the following funds: $21,000 in existing capital, $40,000 in new capital ($20,000 each from partners Evans and Gregg), a $150,000 bank loan to partner Dr. J. Nevin Smith, and a $50,000 bank loan to the partnership. However, Hangtown has not submitted a balance sheet to demonstate that it has on hand the existing capital it claims. Also, it is unclear whether partners Evans and Gregg intend to structure their $40,000 investment as a capital contribution or as a loan. The agreements they signed use the word "loan" but do not state an interest rate and terms of repayment, as would be required if a loan were intended. Further, Evans' balance sheet does not show sufficient net liquid assets to suport his $20,000 commitment. Finally, Dr. Smith has not explicitly stated his intent to make available to the partnership the proceeds of the bank loan he plans to take out individually. A general financial issue will therefeore be specified.

6. In its petition to specify issues, Kidd noted that Hangtown's application listed both Evans and Gregg as employees of Cetec-Sparta, and had not been amended to show otherwise. However, Kidd claims that Evans resigned his position a month before the application was filed, and Gregg resigned in late summer 1978.[5] Kidd also claims Hangtown failed to disclose Evans' and Gregg's past broadcast employment histories. Kidd requests specification of Section 73.3514 and 1.65 issues. In response, Hangtown amended its application to include complete employment information, and stated that it had not done so earlier because it did not believe the omitted information was required. We find that this information was required and should have been provided. The missing information, however, is not of decisional significance. Also, no bad faith or intent to conceal has been shown, since in the unamended application Evans and Gregg described themselves as "experienced broadcasters." Therefore, no issue is warranted.

7. Analysis of the financial data submitted by PBI reveals that $70,175 will be required to construct the proposed station and operate for three months, itemized as follows:

Equipment down payment	$1,750
Equipment payments with interest	4,375
Building	500
Miscellaneous	47,500
Operating costs	16,050
Total	$70,175

PBI's plans for financing construction and operation are not clear. The applicant originally indicated that its shareholders, Joseph A. Storm, Allen Storm, and Robert Walgren, would each loan $25,000 to the corporation. However, following the death of Allen Storm, applicant's counsel informed the Commission that an amendment would be filed showing the transfer of Allen Storm's stock to his wife, Geraldine Storm. This amendment has never been received by the Commission, and we have no indication that Geraldine Storm intends to loan money to the corporation. Therefore, PBI has shown loans of only $50,000 to meet expenses of $70,175. But the availability of even this amount is in doubt. Joseph Storm relies on his mother, Geraldine Storm, for $15,000 of his $25,000 commitment. Yet we are unable to determine from the balance sheets submitted if either Geraldine Storm or Joseph Storm possesses sufficient net liquid assets to support these commitments. Finally, there are substantial, unexplained changes in the balance sheets dated August 21, 1978 and those dated June 26, 1979 of both Robert Walgren and Joseph Storm. For instance, Mr. Walgren shows a net worth of $35,100 on the first date and $162,500 about 10 months later. Similarly, Joseph Storm's net worth increased from $72,300 to $297,900 during the same 10-month period. A general financial issue will therefore be specified.

8. Analysis of the financial data submitted by Kidd reveals that $34,037 is budgeted to construct the proposed station and operate for three months, itemized as follows:

Equipment down payment	$10,458
Equipment payments with interest	1,812
Building	600
Miscellaneous	2,900
Operating Costs	18,267
Total	$34,037

Included in the miscellaneous costs are $1,000 in legal fees. Kidd has made no showing that this amount is sufficient to cover all legal fees usually associated with a comparative hearing. Kidd plans to finance construction and operation with the aid of a $75,000 loan from one partner, John Ogden, to another partner, Chris Kidd. However, Mr. Ogden's balance sheet shows insufficient net liquid assets to support this loan, and his loan commitment letter contains no interest rate or mention of collateral. Finally, the deferred credit letter from the equipment supplier states that the payment terms are contingent upon acceptable credit verification. In such a case, a preliminary credit check of the applicant is required to demonstrate the availability of equipment credit, and no such credit check has been conducted. A general financial issue will therefore be specified.

9. Data submitted by the applicants indicate that there would be a significant difference in the size of the areas and populations which would receive service from the proposals. Consequently, for the purpose of comparison, the areas and populations which would receive FM service of 1 mV/m or greater strength, together with the availability of other primary aural services in such areas, will be considered under the standard comparative issue, for the purpose of determining whether a comparative preference should accrue to any of the applicants.

10. Except as indicated by the issues specified below, the applicants are qualified to construct and operate as proposed. However, since the proposals are mutually exclusive, they must be designated for hearing in a consolidated proceeding on the issues specified below.

11. Accordingly, it is ordered, That, pursuant to section 309(e) of the Communications Act of 1934, as amended, the applications are designated for hearing in a consolidated proceeding, at a time and place to be specified in a subsequent Order, upon the following issues:

1. To determine with respect to each of the applicants:

(a) Whether Hispanic-Americans are a significant minority group within Placerville; and, if so,

[5] Kidd's petition was filed on May 29, 1979.

(b) Whether each applicant has interviewed leaders of that group.

2. To determine with respect to the efforts of PBI to ascertain the needs of its proposed service area:

(a) Whether the applicant interviewed leaders of agriculture and labor in Placerville, California;

(b) Whether the applicant adequately ascertained problems outside of its community of license.

3. To determine whether Hangtown Broadcasters is financially qualified to construct and operate the proposed station.

4. To determine whether Placerville Broadcasting Inc. is financially qualified to construct and operate the proposed station.

5. To determine whether Kidd Broadcasting Company is financially qualified to construct and operate the proposed station.

6. To determine which of the proposals would, on a comparative basis, best serve the public interest.

7. To determine, in the light of the evidence adduced pursuant to the foregoing issues, which, if any, of the applications should be granted.

12. It is further ordered, That the petitions to specify issues filed by Kidd are granted to the extent indicated above and are denied in all other respects.

13. It is further ordered, That, to avail themselves of the opportunity to be heard, the applicants herein shall, pursuant to § 1.221(c) of the Commission's rules, in person or by attorney, within 20 days of the mailing of this Order, file with the Commission in triplicate a written appearance stating an intention to appear on the date fixed for the hearing and to present evidence on the issues specified in this Order.

14. It is further ordered, That the applicants herein shall, pursuant to section 311(a)(2) of the Communications Act of 1934, as amended, and § 73.3594 of the Commission's rules, give notice of the hearing (either individually or, if feasible, jointly) within the time and in the manner prescribed in such Rule, and shall advise the Commission of the publication of such notice as required by § 73.3594(g) of the rules.

Federal Communications Commission.

Richard J. Shiben,

Chief, Broadcast Bureau.

[FR Doc. 80-781 Filed 1-9-80; 8:45 am]

BILLING CODE 6712-01-M

FEDERAL EMERGENCY MANAGEMENT AGENCY

[FEMA-612-DR]

Washington; Major Disaster and Related Determinations

AGENCY: Federal Emergency Management Agency.

ACTION: Notice.

SUMMARY: This is a Notice of the Presidential declaration of a major disaster for the State of Washington (FEMA-612-DR), dated December 31, 1979, and related determinations.

DATED: December 31, 1979.

FOR FURTHER INFORMATION CONTACT: Sewall H. E. Johnson, Disaster Response and Recovery, Federal Emergency Management Agency, Washington, D.C. 20472 (202) 634-7845.

NOTICE: Pursuant to the authority vested in the Director of the Federal Emergency Management Agency by the President under Executive Order 12148 effective July 15, 1979, and delegated to me by the Director under Federal Emergency Management Agency Delegation of Authority, and by virtue of the Act of May 22, 1974, entitled "Disaster Relief Act of 1974" (88 Stat. 143); notice is hereby given that, in a letter of December 31, 1979, the President declared a major disaster as follows:

I have determined that the damage in certain areas of the State of Washington resulting from severe storms, high tides, mudslides and flooding during the period December 13-23, 1979, is of sufficient severity and magnitude to warrant a major-disaster declaration under Public Law 93-288. I therefore declare that such a major disaster exists in the State of Washington.

The time period prescribed for the implementation of Section 313(a), Priority to Certain Applications for Public Facility and Public Housing assistance, shall be for a period not to exceed six months after the date of this declaration.

Notice is hereby given that pursuant to the authority vested in the Director of Federal Emergency Management Agency under Executive Order 12148, and delegated to me by the Director under Federal Emergency Management Agency Delegation of Authority, I hereby appoint Mr. Neale V. Chaney of the Federal Emergency Management Agency to act as the Federal Coordinating Officer for this declared major disaster.

I do hereby determine the following areas of the State of Washington to have been affected adversely by this declared major disaster.

The following Counties for Individual Assistance only: Clallam; Grays Harbor; Jefferson; King; Mason; Skagit; Snohomish; Whatcom.

(Catalog of Federal Domestic Assistance No. 14.701, Disaster Assistance.)

Thomas R. Casey,

Deputy Associate Director, Disaster Response and Recovery, Federal Emergency Management Agency.

[FR Doc. 80-768 Filed 1-9-80; 8:45 am]

BILLING CODE 6718-02

FEDERAL MARITIME COMMISSION

[Independent Ocean Freight Forwarder License No. 805]

Bruce Duncan Co., Inc.; Order of Revocation

On December 26, 1979, Bruce Duncan Co., Inc., 1212 South Flower Street, Los Angeles, CA 90015, voluntarily surrendered its Independent Ocean Freight Forwarder License No. 805 for revocation.

Therefore, by virtue of authority vested in me by the Federal Maritime Commission as set forth in Manual of Orders, Commission Order No. 201.1 (Revised), section 5.01(c), dated August 8, 1977;

It is ordered, that Independent Ocean Freight Forwarder License No. 805 issued to Bruce Duncan Co., Inc., be and is hereby revoked effective December 26, 1979, without prejudice to reapplication for a license in the future.

It is further ordered, that a copy of this Order be published in the Federal Register and served upon Bruce Duncan Co., Inc.

Robert G. Drew,

Director, Bureau of Certification and Licensing.

[FR Doc. 80-702 Filed 1-9-80; 8:45 am]

BILLING CODE 6730-01-M

FEDERAL TRADE COMMISSION

Cigarette Testing Results; Tar and Nicotine Content

AGENCY: Federal Trade Commission.

ACTION: Cigarette Testing Results: "Tar" and Nicotine Content.

SUMMARY: The Federal Trade Commission publishes, on a semi-annual basis, the "tar" and nicotine content of domestic cigarettes in accordance with agreements between the agency and tobacco industry members.

DATES: Effective immediately.

FOR FURTHER INFORMATION CONTACT: Harold C. Pillsbury, PAL-H-750, Federal Trade Commission, Washington, D.C. 20580; (202) 523-3559.

SUPPLEMENTARY INFORMATION: The Federal Trade Commission's laboratory has determined the "tar" (dry particulate matter) and total alkaloid (reported as nicotine) content of 176 varieties of domestic cigarettes. The laboratory utilized the Cambridge filter method with the specifications set forth in the Commission's announcement dated July 31, 1967, 32 FR 11178. The varieties are arranged in alphabetical order with tar values rounded to the nearest whole milligram and nicotine values rounded to the nearest tenth of a milligram.

Tar [1] and Nicotine [2] Content of One-Hundred Seventy-Six (176) Varieties of Domestic Cigarettes

Brand	Type	Tar (mg/cig)	Nicotine (mg/cig)
Alpine	King size, filter, menthol.	15	0.9
American Lights	120 mm, filter	8	0.6
American Lights	120 mm, filter, menthol.	9	0.8
Arctic Lights	King size, filter	8	0.7
Arctic Lights	100 mm, filter, menthol.	9	0.8
Belair	King size, filter, menthol.	10	0.8
Belair	100 mm, filter, menthol.	9	0.7
Benson & Hedges	Regular size, filter, (hard pack).	1	0.1
Benson & Hedges	King size, filter, (hard pack).	18	1.4
Benson & Hedges	100 mm, filter, (hard pack).	17	1.1
Benson & Hedges	100 mm, filter, menthol, (hard pack).	16	1.1
Benson & Hedges	100 mm, filter	17	1.1
Benson & Hedges	100 mm, filter, menthol.	17	1.1
Benson & Hedges Lights.	100 mm, filter	11	0.8
Benson & Hedges Lights.	100 mm, filter, menthol.	11	0.7
Bull Durham	King size, filter	28	1.9
Camel	Regular size, non-filter.	26	1.8
Camel	King size, filter	19	1.4
Camel Lights	King size, filter	10	0.9
Camel Long Lights	100 mm, filter	13	1.1
Carlton	King size, filter, (hard pack).	0.5[3]	0.05[3]
Carlton	King size, filter	1	0.1
Carlton	King size, filter, menthol.	1	0.1
Carlton 100's	100 mm, filter	6	0.4
Carlton 100's	100 mm, filter, menthol.	5	0.4
Chesterfield	Regular size, non-filter.	23	1.4
Chesterfield	King size, non-filter	28	1.7
Chesterfield	King size, filter	15	0.9
Chesterfield	101 mm, filter	16	1.1
Decade	King size, filter	4	0.4
Decade	King size, filter, menthol.	4	0.4
Doral	King size, filter	13	1.0
Doral	King size, filter, menthol.	12	0.9
Doral II	King size, filter	5	0.5
Doral II	King size, filter, menthol.	5	0.4
DuMaurier	King size, filter, (hard pack).	15	1.0
English Ovals	Regular size, non-filter, (hard pack).	23	1.8
English Ovals	King size, non-filter, (hard pack).	30	2.4
Eve	100 mm, filter	15	1.1
Eve	100 mm, filter, menthol.	15	1.1

Tar [1] and Nicotine [2] Content of One-Hundred Seventy-Six (176) Varieties of Domestic Cigarettes—Continued

Brand	Type	Tar (mg/cig)	Nicotine (mg/cig)
Eve	120 mm, filter, (hard pack).	13	1.0
Eve	120 mm, filter, menthol, (hard pack).	13	1.0
Fatima	King size, non-filter	28	1.6
Galaxy	King size, filter	17	1.1
Half & Half	King size, filter	24	1.8
Herbert Tareyton	King size, non-filter	28	1.7
Home Run	Regular size, non-filter.	24	1.5
Iceberg 100's	100 mm, filter, menthol.	3	0.3
Kent	King size, filter, (hard pack).	13	1.0
Kent	King size, filter	11	0.9
Kent III	King size, filter	3	0.3
Kent Golden Lights	King size, filter	8	0.7
Kent Golden Lights	King size, filter, menthol.	9	0.7
Kent	100 mm, filter	14	1.0
Kent	100 mm, filter, menthol.	15	1.2
Kent Golden Lights	100 mm, filter	9	0.8
Kent Golden Lights	100 mm, filter, menthol.	10	0.8
Kool	Regular size, non-filter, menthol.	19	1.1
Kool	King size, filter, menthol, (hard pack).	16	1.3
Kool	King size, filter, menthol.	16	1.3
Kool Milds	King size, filter, menthol.	13	0.8
Kool Super Lights	King size, filter, menthol.	9	0.7
Kool	100 mm, filter, menthol.	16	1.2
Kool Super Lights	100 mm, filter, menthol.	9	0.7
L & M	King size, filter, (hard pack).	14	0.9
L&M	King size, filter	15	1.0
L & M Lights	King size, filter	7	0.6
L & M	100 mm, filter	16	1.0
L & M Lights	100 mm, filter	7	0.6
L & M	100 mm, filter, menthol.	16	1.0
Lark	King size, filter	17	1.2
Lark Lights	King size, filter	8	0.6
Lark	100 mm, filter	19	1.3
Lark Lights	100 mm, filter	8	0.6
Long Johns	120 mm, filter	17	1.3
Long Johns	120 mm, filter, menthol.	16	1.4
Lucky Strike	Regular size, non-filter.	24	1.4
Lucky Ten	King size, filter	9	0.7
Lucky 100's	100 mm, filter	4	0.3
Marlboro	King size, filter, (hard pack).	17	1.1
Marlboro	King size, filter, menthol, (hard pack).	15	0.9
Marlboro	King size, filter	17	1.1
Marlboro Lights	King size, filter	12	0.8
Marlboro	King size, filter, menthol.	15	0.9
Marlboro	100 mm, filter, (hard pack).	17	1.1
Marlboro Lights	100 mm, filter	12	0.8
Max	120 mm, filter	18	1.4
Max	120 mm, filter, menthol.	18	1.4
Merit	King size, filter	8	0.6
Merit	King size, filter, menthol.	8	0.6
Merit 100's	100 mm, filter	10	0.7
Merit 100's	100 mm, filter, menthol.	11	0.8
Montclair	King size, filter, menthol.	17	1.2
More	120 mm, filter	23	1.8
More	120 mm, filter, menthol.	24	1.8
Multifilter	King size, filter	11	0.8
Multifilter	King size, filter, menthol.	12	0.8

Tar [1] and Nicotine [2] Content of One-Hundred Seventy-Six (176) Varieties of Domestic Cigarettes—Continued

Brand	Type	Tar (mg/cig)	Nicotine (mg/cig)
Newport	King size, filter, menthol, (hard pack).	16	1.2
Newport	King size, menthol	17	1.2
Newport Lights	King size, filter, menthol.	10	0.8
Newport	100 mm, filter, menthol.	20	1.5
Now	King size, filter, (hard pack).	2	0.2
Now	King size, filter	2	0.2
Now	King size, filter, menthol, (hard pack).	2	0.2
Now	King size, filter, menthol.	2	0.2
Oasis	King size, filter, menthol.	15	1.0
Old Gold Straights	King size, non-filter	25	1.6
Old Gold Filters	King size, filter	17	1.2
Old Gold Lights	King size, filter	10	0.8
Old Gold 100's	100 mm, filter	19	1.4
Pall Mall	King size, non-filter	24	1.4
Pall Mall	King size, filter	18	1.2
Pall Mall Extra Light	King size, filter	7	0.6
Pall Mall	100 mm, filter	18	1.3
Pall Mall	100 mm, filter, menthol.	16	1.2
Pall Mall Lights	100 mm, filter	12	0.9
Parliament Lights	King size, filter, (hard pack).	10	0.7
Parliament Lights	King size, filter	9	0.7
Parliament Lights 100's.	100 mm, filter	12	0.8
Philip Morris	Regular size, non-filter.	21	1.3
Philip Morris Commander.	King size, non-filter	27	1.7
Philip Morris International.	100 mm, filter, (hard pack).	18	1.1
Philip Morris International.	100 mm, filter, menthol, (hard pack).	18	1.1
Picayune	Regular size, non-filter.	23	1.4
Piedmont	Regular size, non-filter.	23	1.3
Players	Regular size, non-filter, (hard pack).	26	1.9
Raleigh	King size, non-filter	24	1.3
Raleigh	King size, filter	16	1.0
Raleigh Lights	King size, filter	9	0.8
Raleigh	100 mm, filter	16	1.1
Raleigh Lights	100 mm, filter	9	0.8
Real	King size, filter	10	0.9
Real	King size, filter, menthol.	9	0.7
St. Moritz	100 mm, filter	16	1.1
St. Moritz	100 mm, filter, menthol.	15	1.1
Salem	King size, filter, menthol, (hard pack).	17	1.2
Salem	King size, filter, menthol.	16	1.1
Salem Lights	King size, filter, menthol.	11	0.8
Salem	100 mm, filter, menthol.	20	1.4
Salem Long Lights	100 mm, filter, menthol.	11	0.9
Saratoga	120 mm, filter, (hard pack).	17	1.1
Saratoga	120 mm, filter, menthol, (hard pack).	15	1.0
Silva Thins	100 mm, filter	12	1.0
Silva Thins	100 mm, filter, menthol.	10	0.8
Spring 100's	100 mm, filter, menthol.	19	1.1
Tall	120 mm, filter	18	1.5
Tall	120 mm, filter, menthol.	16	1.3
Tareyton	King size, filter	14	0.9
Tareyton Lights	King size, filter	8	0.6
Tareyton Ultra Low-Tar.	King size, filter, menthol.	2	0.2

Tar [1] and Nicotine [2] Content of One-Hundred Seventy-Six (176) Varieties of Domestic Cigarettes—Continued

Brand	Type	Tar (mg/cig)	Nicotine (mg/cig)
Tareyton	100 mm, filter	14	1.0
Tareyton Long Lights	100 mm, filter	9	0.7
Tempo	King size, filter	8	0.6
Triumph	King size, filter	3	0.4
Triumph	King size, filter, menthol.	2	0.3
True	King size, filter	5	0.4
True	King size, filter, menthol.	5	0.4
True 100's	100 mm, filter	13	0.8
True 100's	100 mm, filter, menthol.	14	0.8
Twist	100 mm, filter, lemon/menthol.	16	1.3
Vantage	King size, filter	11	0.8
Vantage	King size, filter, menthol.	11	0.8
Vantage	100 mm, filter	12	0.9
Viceroy	King size, filter	13	0.9
Viceroy Rich Lights	King size, filter	9	0.7
Viceroy	100 mm, filter	16	1.1
Viceroy Rich Lights	100 mm, filter	10	0.8
Virginia Slims	100 mm, filter	16	1.0
Virginia Slims	100 mm, filter, menthol.	15	0.9
Winston	King size, filter, (hard pack).	19	1.4
Winston	King size, filter	20	1.4
Winston Lights	King size, filter	14	1.1
Winston 100's	100 mm, filter	16	1.3
Winston Lights 100's	100 mm, filter	13	1.0
Winston	100 mm, filter, menthol.	19	1.4

[1] TPM dry (tar)-milligrams total particulate matter less nicotine and water.
[2] milligrams total alkaloids reported as nicotine.
[3] greater than value listed.

By direction of the Commission, dated December 5, 1979.

James A. Tobin,

Acting Secretary.

[FR Doc. 80-780 Filed 1-9-80; 8:45 am]

BILLING CODE 6750-01-M

GENERAL ACCOUNTING OFFICE

Regulatory Reports Review; Receipt of Report Proposal

The following request for clearance of a report intended for use in collecting information from the public was received by the Regulatory Reports Review Staff, GAO, on January 4, 1980. See 44 U.S.C. 3512 (c) and (d). The purpose of publishing this notice in the Federal Register is to inform the public of such receipt.

The notice includes the title of each request received; the name of the agency sponsoring the proposed collection of information; the agency form number, if applicable; and the frequency with which the information is proposed to be collected.

Written comments on the proposed FMC request are invited from all interested persons, organizations, public interest groups, and affected businesses. Because of the limited amount of time GAO has to review the proposed request, comments (in triplicate) must be received on or before January 28, 1980, and should be addressed to Mr. John M. Lovelady, Assistant Director, Regulatory Reports Review, United States General Accounting Office, Room 5106, 441 G Street, NW., Washington, D.C. 20548.

Further information may be obtained from Patsy J. Stuart of the Regulatory Reports Review Staff, 202-275-3532.

Federal Maritime Commission

The Federal Maritime Commission requests clearance of a new rule—46 CFR 552, Certification of Company Policies and Efforts to Combat Rebating in the Foreign Commerce of the United States. This rule implements Pub. L. 96-25, which requires the Chief Executive Officer of every vessel operating common carrier (VOCC) by water in the foreign commerce of the United States to file a periodic, written certification under oath attesting to company policies and efforts to combat rebating. Discretionary authority was also given to the Commission to require similar certification from any shipper, consignor, consignee, forwarder, broker, other carrier or person subject to the Shipping Act, 1916. Each VOCC must file with the Commission tariffs containing provisions which state the company policy prohibiting rebating within 90 days of the effective date of this rule. However, if a carrier is a member of a conference or rate agreement, it must ensure that the body publishes the necessary provisions in the conference tariff. The Commission estimates the compliance with this rule will require an average burden per respondent of 5 hours for the initial certification, 2 hours for the subsequent annual certification, and 2 hours for each tariff change. The estimated number of respondents is 900 vessel operating common carriers in the foreign commerce, having approximately 2300 tariffs on file.

Norman F. Heyl,

Regulatory Reports Review Officer.

[FR Doc. 80-848 Filed 1-9-80; 8:45 am]

BILLING CODE 1610-01-M

GENERAL SERVICES ADMINISTRATION

[GSA Order APD 2800.1A dated November 8, 1979]

Contract Clearance Procedures

SUBJECT: Contract clearance.

AGENCY: General Services Administration.

ACTION: Contract clearance procedures.

SUMMARY: This order establishes the revised requirements and procedures for contract clearance in the General Services Administration. It provides that contract actions above certain specific dollar thresholds be submitted for pre-award clearance. These actions will be reviewed by the Director of Contract clearance, Office of Acquisition Policy.

EFFECTIVE DATE: The effective date of this order is November 8, 1979.

Dated: December 21, 1979.

Gerald McBride,

Assistant Administrator for Acquisition Policy.

1. *Purpose.* This order provides the requirements and procedures for contract clearance in GSA.

2. *Cancellation.* APD Order 2800.1, dated January 30, 1979, is canceled.

3. *Nature of revision.* This revision updates the contract clearance requirements and procedures for GSA procurement actions. The original order (APD 2800.1, paragraph 4) provided for revisions to the contract clearance procedures. Accordingly, the order is being revised to cover changes considered to be necessary. The major changes are as follows:

a. Clearance procedures are now applicable to FPRS.

b. A procedure to waive pre-award clearance reviews, where justified, has been incorporated into the order.

c. The approval authority for clearance is changed from the Assistant Administrator for Acquisition Policy to the Director of Contract Clearance, Office of Acquisition Policy.

d. The requirement for manual approval of procurement actions is deleted.

4. *Applicability.* This order is applicable to ADTS, FPRS, FSS, and PBS.

5. *Summary of clearance order.* The attachment sets forth the requirements and procedures for clearance of contracts by the Director of Contract Clearance, Office of Acquisition Policy. It lists the types of contractual actions requiring such clearance and includes details on how to process contractual actions for the requisite clearance. In addition, ADTS, FPRS, FSS, and PBS are required to establish and maintain contract clearance offices in their Central Offices, and perform the clearance function for both regional and Central Office procurements. Each service shall establish clearance requirements to provide for pre-award review of contractual actions (including those requiring clearance by the Director of Contract Clearance) representing approximately 80 percent

of forecasted dollar obligations or 300 contract actions for a fiscal year.

6. *Implementing actions.* ADTS, FPRS, FSS, and PBS shall develop written procedures implementing this order with respect to service performance of the contract clearance function. FPRS shall furnish a copy of these procedures to the Office of Acquisition Policy by March 31, 1980.

7. *Effective date.* For ADTS, FSS, and PBS this order was effective on April 15, 1979. For FPRS, the effective date is March 31, 1980. Contractual actions awarded by ADTS, FSS, and PBS after April 14, 1979, or in the case of FPRS, contractual actions to be awarded on or after March 31, 1980, which meet the criteria for paragraphs 2 and 3 of the attachment, shall be subject to the provisions of this order.

Gerald McBride,
Assistant Administrator for Acquisition Policy.

Attachment

Chapter 1. Clearance Procedures

1. *General.* Each proposed contractual document and supporting file shall be reviewed by the contracting officer prior to signing the contractual document and prior to forwarding the contract and file for review by higher authority within the service and any required clearance by the Director of Contract Clearance. The contracting officer is responsible for the completeness and accuracy of the contractual document and its supporting file. Each contract file shall contain all pertinent information applicable to the proposed award. The information included in the contract file shall be in sufficient detail to permit reconstruction of all significant events by any subsequent reviewer without referrals to the individuals responsible for the contractual actions.

2. *Contractual actions requiring clearance by the Director of Contract Clearance.*

a. The contractual actions listed in d below require the approval of the Director of Contract Clearance prior to award. The term "contractual actions" as used here means:

(1) Contracts for supplies and non-personal services, including contracts for construction, alteration and repair, leasing and stockpile acquisition.

(2) Modifications to existing contracts which are beyond the scope of the contracts, including modifications for the exercise of options (or, in the case of a lease, an additional term of the lease).

(3) Definitive contracts superseding letter contracts; however, letter contracts do not require clearance.

Orders issued under indefinite delivery type contracts (FPR 1–3.409), orders issued to central nonprofit agencies pursuant to the Wagner-O'Day Act requirements (FPR sub-part 1–5.8), and contracts for disposal are excluded from these clearance requirements.

b. For clearance purposes, the dollar value of a contractual action is the sum of the estimated or actual dollar amount of obligations and the amount of any option (or, in case of a lease, the full term of the lease) included in the action. The estimated or actual dollar obligations include those to be made by GSA and other agencies ordering under GSA-awarded contracts.

c. On solicitations resulting in more than one award where one or more of the awards require contract clearance, no awards will be made until clearance is obtained. This requirement, however, does not apply to "multiple award schedule" contractual actions.

d. The following contractual actions (including actions to be awarded by regional offices) shall be submitted to the Director of Contract Clearance for clearance:

(1) *For ADTS, FPRS, FSS, and PBS*

Actions resulting from invitation for bids, including Small Business Restricted Advertising, when award is proposed to a sole responsive and responsible bidder and the total dollar value of the sole bid items to be awarded exceeds $500,000.

(2) *For ADTS only:*

(a) Negotiated actions for teleprocessing services schedules exceeding $10,000,000.

(b) Negotiated actions for ADP schedules exceeding $4,000,000.

(c) All other negotiated actions exceeding $2,000,000.

(3) *For FSS only:*

All negotiated actions exceeding $3,500,000.

(4) *For FPRS and PBS only:*

All negotiated actions exceeding $1,000,000.

3. *ADTS, FPRS, FSS, and PBS contract clearance.*

a. ADTS, FPRS, FSS, and PBS shall establish and maintain requirements and procedures for clearance of contractual actions prior to award. The requirements for clearance shall include those contractual actions (including actions to be awarded by counterpart regional services) to be sent to the Director Contract Clearance as well as other contractual actions to be awarded either by the Central Office or counterpart regional services. With respect to such other contractual actions, each service shall determine the scope of the clearance requirements. However, the clearance requires so established shall provide that contractual actions representing approximately 80 percent of the forecasted dollar obligations or 300 contract actions for a fiscal year will be cleared by the service prior to award.

(1) The value of the contractual actions to be cleared by the Director of Contract Clearance is included in the 80 percent of the forecasted dollar obligations or 300 contract actions criteria.

(2) The forecasted dollar obligations include those to be made by the GSA and other agencies ordering under GSA-award contracts.

(3) In the case of FPRS, the threshold for FY 1980 shall apply only to those contractual actions awarded between March 31, 1980, and September 30, 1980. For succeeding fiscal years, the threshold shall cover all actions for the fiscal year.

(4) The clearance requirements shall include a representative number of actions, including sole bids in response to IFB's, sole offers under negotiated solicitations, and complex and high dollar value actions.

In addition, randomly selected contractual actions should be reviewed on a post-award basis.

b. ADTS, FPRS, FSS, and PBS shall take the actions necessary to establish a contract clearance office in their Central Offices to perform the clearance functions. The contract clearance office should be an organizational element of the service's office of acquisition/contracting. The clearance function shall be performed as full-time duty by a staff sufficient for this purpose. The personnel selected to perform the contract clearance should possess the qualifications required of contracting officers set forth in FPR 1–1.404 and have demonstrated technical proficiency in the contracting field and capability for exercising sound business judgment.

c. The contract clearance office shall thoroughly review each contractual action submitted to assure conformance with applicable laws, regulations, and established policies and procedures. Particular attention should be given to the business aspects, including the pricing, of the contractual actions. The contract clearance office shall serve as the service's contact point with the Contract Clearance Directorate and furnish any additional required information or clarifications which may be necessary in processing contractual actions requiring clearance by the Director of Contract Clearance.

d. All contractual actions sent to the Director of Contract Clearance shall be transmitted by memorandum signed by

the head of the service office of acquisition/contracting. The memorandum shall indicate that the particular contractual action has been thoroughly reviewed, and conforms to all applicable laws and regulations, established policies and procedures. It shall include the service's recommendation for approval by the Director of Contract Clearance.

4. *Concurrence of Counsel.* Contractual actions to be submitted to the Director of Contract Clearance for clearance shall have the prior concurrence for legal sufficiency of the appropriate Assistant General Counsel in the Central Office. Evidence of such concurrence shall be made a part of the supporting contract file.

5. *Post-award contract review.* a. The Contract Clearance Directorate shall perform contract reviews on a post-award basis. The Director of Contract Clearance shall select the contractual actions to be reviewed on this basis.

b. The results of post-award reviews performed by the Contract Clearance Directorate shall be provided to the service's office of acquisition/contracting.

6. *Information to be furnished with contractual actions submitted to the Contract Clearance Directorate.* a. Contract file(s):

(1) *Pre-award review:* The complete contract file supporting the contractual action shall be forwarded. In addition, a complete duplicate file for retention by the Contract Clearance Directorate shall also be sent. For modifications to contracts requiring clearance, the basic contract and all prior modifications shall be furnished. All pertinent information related to the award of the basic contract and to the issuance of each of the prior modifications shall also be furnished.

(2) *Post-award contract review:* The complete contract file shall be forwarded. In those instances where the original contract file is required to be retained by the contracting activity; e.g., to allow processing of administrative actions, etc., a complete duplicate file shall be furnished. Upon completion of its post-award review, the Contract Clearance Directorate will return the contract file to the service office of acquisition/contracting.

b. The information and documents listed below are those which are normally required as support for an advertised or negotiated contract. These should be included in the contract file in order indicated; e.g., starting with the lowest number. Not all information and documents will be applicable to every contractual action. Conversely, other information and documents may be applicable to specific contractual actions and the contracting officer should include such items in the contract file in proper sequence in the contracting cycle. An index of the contents of the file should be prepared and placed on the top of the file. In addition, each item should be tabbed and, if more than one document is included under a tab, they should be filed chronologically with the most recent document on top.

(1) Requisition or requests for contractual action. The basic acquisition authority and all changes thereto should be filed under this tab. Documentations supporting and authorizing any differences between supplies or services called for in the contractual document and the acquisition authority must also be filed under this tab.

(2) Specifications, drawings or other descriptive material of the supplies or services being acquired. If specifications and drawings are too voluminous for incusion in the file, Tab 2 should then include a brief description of the supplies or services being acquired and a statement identifying the Central Office or regional service file containing the specifications and drawings.

(3) Acquisition plan, including where applicable, the determination required by OMB Circular A-76.

(4) Determinations and findings. Determinations and findings required by subparts 1-3.2 and 1-3.3 of the FPR shall be included under this tab.

(5) Department of Labor Wage Determination.

(6) Small business and labor surplus area determinations.

(7) source list.

(8) Statement as to synopsis of proposed procurement pursuant to FPR 1-1.1003.

(9) Pre-invitation notice (PIN).

(10) IFB/RFP and amendments.

(11) Abstract of bids/proposals including identification of the low bidder/offeror, discounted price, etc.

(12) Cost or pricing data. Where the requirement for submission of cost or pricing data is waived as provided in FPR 1-3.807.3, the waiver and documentation supporting the waiver shall be filed under this tab.

(13) Audit report. Where the requirement for an audit of a price proposal is waived as provided in FPR 1-3.809, the waiver and documentation supporting the waiver shall be filed under this tab. Reports of technical analysis required in support of audit reports shall be filed under this tab. In the case of leasing actions, appraisals reports and market surveys are to be furnished and included under this tab.

(14) Price or cost analysis report prepared pursuant to FPR 1-3.807.2. Supporting technical analyses, other than those supporting an audit report, shall be filed under this tab. The profit or fee analyses required by FPR 1-3.808 shall be made a part of the price or cost analysis report. In those cases where an independent Government estimate is prepared, it also shall be made a part of the price or cost analysis report.

(15) Price negotiation memorandum required by FPR 1-3.811 shall be filed under this tab. This memorandum must be written so as to permit reconstruction of all the major considerations of the acquisitions. Chapter 2 of this attachment provides a detailed summary on the information to be included in the Price Negotation Memorandum.

(16) Certificate of current cost or pricing data.

(17) Pre-award survey.

(18) EEO compliance review. See FPR 1-12.805-5 and Temporary Regulations Number 19, dated September 15, 1970.

(19) No bid or no proposal correspondence.

(20) Unsuccessful bids or proposals. Unsuccessful bids or proposals need not be included in the file if too voluminous, provided that an abstract of bids/proposals is inlcuded in the file. However, a copy of each rejected bid or each unacceptable proposal must be included in the file under this tab.

(21) Mistakes in bids and protests. All correspondence and determinations relating to mistakes in bids disclosed prior to award and/or protests shall be filed under this tab.

(22) Actions taken on late bids or proposals.

(23) Successful bid or proposal and all pertinent correspondence applicable to the contractual action.

(24) Contractual action. A completely executed copy of the contractual action shall submitted. Where an award is to be accomplished by use of the award portion of the SF 33, or similar forms, the contract document shall be included in Tab 23.

(25) Status of overall requirement. A summary is to be provided on disposition of all items solicited; e.g., items 1 to 10 no offers received, item 11 in the total amount of $100,000 to ABC Company, items 12 and 13 to XYZ Company, value of award $350,000 (Item 12 $200,000 and item 13 $150,000). For negotiated actions, this information shall be included in the Price Negotiation Memorandum.

(26) Evidence of concurrence for legal sufficiency of the appropriate Assistant General Counsel in the Central Office.

(27) Any service required approvals.

7. *Clearance, conditional clearance or return of contractual actions.* a. Contractual actions approved by the Director of Contract Clearance shall be promptly returned to the service. If the approval of a contractual action is conditional (i.e., subject to satisfying certain conditions), such conditional approval shall be documented in a memorandum to the service signed by the Director of Contract Clearance. The stated conditions must be satisfied prior to consummating the award.

b. Contractual actions requiring clearance by the Director of Contract Clearance which are not approved shall be returned to the cognizant service. The memorandum of transmittal shall set forth the reasons for the return.

c. The service contract clearance office shall advise the Director of Contract Clearance, in writing, of any contractual action which was cleared by the Director of Contract Clearance but was not awarded. A complete explanation for the failure to make award shall also be provided.

8. *Waiver of pre-award contract clearance requirement.* a. A waiver of the contract clearance requirement may be authorized in extraordinary circumstances by the Director of Contract Clearance. Such a waiver must be requested by the head of the service office of acquisition/contracting. The request should be in writing and include the following information:

(1) The extraordinary circumstances that require the immediate award of the contractual action. A chronology of events from receipt of the requisition or request for contractual action to submission of the waiver request shall be provided.

(2) Proposed contractor and contract number.

(3) Description and quantity of the supplies or nonpersonal services being acquired.

(4) Total dollar value of the contractual action. (See paragraph 2b above.)

(5) Method of procurement; e.g., by formal advertising or negotiation.

(6) Solicitation number, number of sources solicited, and number of offers received.

(7) If negotiated, the basis for award; e.g., adequate price competition, established catalog or market price, etc.

(8) A statement that the proposed award has been thoroughly reviewed by the service contract clearance office and the action conforms to all applicable laws and regulations. If the proposed award has not been so reviewed, this fact shall be documented.

b. Where there is insufficient time to make a written request for a waiver, the head of the service office of acquisition/contracting may make an oral request for a waiver. The information called for in paragraph 8a above shall be provided.

c. If the circumstances are considered appropriate, the Director of Contract Clearance may authorize a waiver of the clearance requirement subject to the action being submitted for a post-award review within ten working days after receipt of advice of the waiver. For oral requests, the authorization will be given orally and confirmed in writing.

d. The original copy of the request for waiver and the waiver authorization shall be placed in the official file. For oral waiver requests and oral authorizations, the original copy of the confirmation memorandum called for in paragraph 8c above shall be placed in the contract file.

e. The authorization of a waiver of the contract clearance requirement by the Director of Contract Clearance does not constitute his approval of the proposed award nor of any deviations from applicable laws and regulations.

f. The services may publish procedures authorizing waiver of their pre-award clearance requirements.

Chapter 2. Data to be Included in a Price Negotiation Memorandum (PNM)

1. *General.* The PNM memorandum should be detailed in its documentation of the negotiation.

2. *Specific.* The PNM should include the following items as a minimum:

a. A summary of the offers received from each offeror (prices, terms, etc.), the Government position (objectives) and the negotiation results. Any revised or adjusted offers as well as any revised or adjusted Government positions (objectives) shall be included in the summary.

b. Names and titles (position) of the Government and contractor representatives who participated in the negotiations.

c. Any exceptions to the Government's terms and conditions should be addressed as well as any special or non-standard contract provision.

d. Reference to the price analysis report should be made, or where appropriate, actual incorporation of the price analysis.

e. Where cost or pricing is data obtained, a narrative should be included covering, (i) the source of the data (prior incurred costs, previous contract experience, estimates, etc.), (ii) the contracting officer's non-reliance on the data, and (iii) the non-accuracy of the data. (See FPR 1-3.811.)

f. Where recommended audit or technical positions are available, the memorandum should clearly identify their positions. Where the contracting officer elects not to accept the recommended position, appropriate rationale must be included as to why the recommended position is not accepted. Any alternate position developed must be fully supported with factual data.

g. The memorandum must include the competitive range and the basis for its establishment, the offerors included in the competitive range, the actual negotiations conducted, the offers and counter-offers made by the parties, including the rationale supporting all Government positions and the particulars associated with conducting the Best and Final Offer (BAFO) procedure. (See FPR 1-3.805-1(b)).

h. The memorandum must clearly show and support that the price negotiated is reasonable. In the event the price is above the Government's negotiation objective, appropriate rationale must be included as to why the negotiated price is now considered to be reasonable (e.g., additional supporting data presented during negotiation).

[FR Doc. 80-706 Filed 1-9-80; 8:45 am]

BILLING CODE 6820-21-M

[Intervention Notice 105]

D.C. Public Service Commission and Chesapeake and Potomac Telephone Co.; Proposed Intervention in Rate Increase Proceeding

Correction

In FR Doc 80-28, appearing on page 844, in the issue of Thursday, January 3, 1980, the heading should have read as set forth above.

DEPARTMENT OF HEALTH, EDUCATION, AND WELFARE

Center for Disease Control

Investigation of a Non-Pharmacologic Approach to Hypertension Control at the Workplace and Epidemiologic Study of Portsmouth Naval Shipyard; Meetings

The following meetings will be convened by the National Institute for Occupational Safety and Health of the Center for Disease Control and will be open to the public for observation and participation, limited only by the space available:

INVESTIGATION OF A NON-PHARMACOLOGIC APPROACH TO HYPERTENSION CONTROL AT THE WORKPLACE

Date: February 7, 1980
Time: 12 m. to 4 p.m.
Place: Room 117, Robert A. Taft Laboratories, 4676 Columbia Parkway, Cincinnati, Ohio 45226
Purpose: To discuss the details of a research project designed to evaluate the feasibility and efficacy of cue-controlled relaxation in the control of mild hypertension at the workplace.

Additional information may be obtained from:
Dr. Lawrence Schleifer, Division of Biomedical and Behavioral Science, National Institute for Occupational Safety and Health (NIOSH), Center for Disease Control (CDC), 4676 Columbia Parkway, Cincinnati, Ohio 45226, Telephone: 513/684-8291.

EPIDEMIOLOGIC STUDY OF PORTSMOUTH NAVAL SHIPYARD

Date: March 7, 1980
Time: 8:30 a.m. to 3:30 p.m.
Place: Auditorium, Room 161, Robert Taft Laboratories, 4676 Columbia Parkway, Cincinnati, Ohio 45226
Purpose: To discuss epidemiologic study of civilian employees at the Portsmouth Naval Shipyard.

Additional information may be obtained from:
Mr. Philip J. Bierbaum, Division of Surveillance, Hazard Evaluations and Field Studies, NIOSH, CDC, 4676 Columbia Parkway, Cincinnati, Ohio 45226, Telephone: 513/684-2422.

Dated: January 4, 1980.

J. D. Miller,
Acting Director, Center for Disease Control.

[FR Doc. 80-772 Filed 1-9-80; 8:45 am]
BILLING CODE 4110-87-M

Mine Health Research Advisory Committee; Meeting

In accordance with Section 10(a)(2) of the Federal Advisory Committee Act (Public Law 92-463), the Center for Disease Control announces the following National Institute for Occupational Safety and Health Committee meeting:

Name: Mine Health Research Advisory Committee
Date: February 5, 1980
Place: Silver Stope Room, Ramada Inn 404 N. Freeway, Tucson, Arizona 85705
Time: 8 a.m. to 4 p.m.
Type of Meeting: Open
Contact Person: William A. Felsing, Jr., Executive Secretary, NIOSH, 5600 Fishers Lane, Room 8-43, Rockville, Maryland 20857, Phone: 301-443-6437.

Purpose: The Committee is charged with advising the Secretary of Health, Education, and Welfare, on matters involving or relating to mine health research, including grants and contracts for such research.

Agenda: Agenda items for the meeting will include announcements, consideration of minutes of previous meeting, University of Arizona mine engineering report, analysis of the National Institute for Occupational Safety and Health (NIOSH) mine health research initiatives, silicate, asbestos and mine health hazard evaluation program.

Agenda items are subject to change as priorities dictate.

The meeting is open to the public for observation and participation. Anyone wishing to make an oral presentation should notify the contact person listed above as soon as possible before the meeting. The request should state the amount of time desired, the capacity in which the person will appear, and a brief outline of the presentation. Oral presentations will be scheduled at the discretion of the Chairperson and as time permits. Anyone wishing to have a question answered during the meeting by a scheduled speaker should submit the question in writing, along with his or her name and affiliation, through the Executive Secretary to the Chairperson. At the discretion of the Chairperson and as time permits, appropriate questions will be asked of the speakers.

A roster of members and other relevant information regarding the meeting may be obtained from the contact person listed above.

Dated: January 4, 1980.

J. D. Miller,
Acting Director, Center for Disease Control.

[FR Doc. 80-771 Filed 1-9-80; 8:45 am]
BILLING CODE 4110-87-M

Office of Education

National Advisory Council on Vocational Education; Meeting

AGENCY: National Advisory Council on Vocational Education.

ACTION: Notice of Public Meeting.

SUMMARY: This notice sets forth the schedule and proposed agenda of a forthcoming meeting of the National Advisory Council on Vocational Education. It also describes the functions of the Council. Notice of these meetings is required under the Federal Advisory Committee Act, (5 U.S. Code, Appendix I, section 10(a)(2)). This document is intended to notify the general public of its opportunity to attend.

DATE: January 25, 1980.

ADDRESS: Hillsborough County Schools Administration Center, 901 East Kennedy Boulevard, Tampa, Florida—Board Auditorium, Main Floor.

The National Advisory Council on Vocational Education is established under section 104 of the Vocational Education Amendments of 1968, Pub. L. 90-576. The Council is directed to:

(A) advise the President, the Congress, and the Commissioner concerning the administration of, preparation of general regulations for, and operation of, vocational education programs supported with assistance under this title;

(B) review the administration and operation of vocational education programs under this title, including the effectiveness of such programs in meeting the purposes for which they are established and operated, make recommendations with respect thereto, and make annual reports of its findings and recommendations (including recommendations for changes in the provisions of this title) to the Secretary for transmittal to the Congress; and

(C) conduct independent evaluations of programs carried out under this title and publish and distribute the results thereof.

On January 25, 1980, the National Advisory Council on Vocational Education will meet in regular session from 10:15 A.M. to 3:00 P.M. in the Board Auditorium, Main Floor, of the Hillsborough County Schools Administration Center, Tampa, Florida. The following Agenda will be included in this meeting:

10:15-10:30 A.M. Formal Opening of Meeting and Reports of the Chairperson and Executive Director
10:30-11:15 A.M. NAACP Legal Defense Fund: Topic: *Monitoring of the BOAE re Implementation of VEA and Other Related Concerns:* Phyllis McClure
11:15-11:45 A.M. Topic: *Vocational Education and the Incarcerated Preliminary Results of the Intramural NIE Effort:* Dr. Richard Carlson
11:45-12:15 A.M. Topic: *The Federal Vocational Education Money—Impact of the Current Distribution Method:* John Standridge, Director, Dade County Vocational Education Program
12:15-1:15 P.M. Lunch Break
1:15-1:45 P.M. Topic: *Community-Based Organizations' Concerns with Vocational Education:* Mrs. Augusta Thomas, Executive Director, Tampa Urban League
1:45-2:00 P.M. *Committee Reports of Staff Briefings:*
—Technical Assistance Committee, Patricia Vasquez;
—Legislative Committee, George Wallrodt;
—Transition Team (DOE), Raymond C. Parrott;
—Community Resource Center, George Wallrodt;

—Preparation for Oversight Hearings, Raymond C. Parrott

2:00–2:45 P.M. Continuing Discussion of Issues/Concerns re Reauthorization of the Vocational Education Legislation

2:45–3:00 P.M. Public Comment

3:00 P.M. Adjournment

Note.—No session is planned on January 26, 1980.

On Friday, January 25, 1980, the National Advisory Council on Vocational Education will visit the Florida State Advisory Council on Vocational Education's Regular Session at the Holiday Inn Central, Riverfront Room from 8:30 A.M. to 10:00 A.M. This session continues on until Noon.

On January 24, 1980, the Technical Assistance Committee of the Council will meet from 4:30–6:00 P.M. at the Holiday Inn Central, Parlor Room 426, to discuss and decide on a strategy regarding the National Council's participation in the Management Evaluation Reviews for Compliance in 1980.

Also on January 24, 1980, the Legislative Committee of the Council will meet from 4:30–6:00 P.M. at the Holiday Inn Central, Board Room, 2nd Floor to discuss key issues regarding oversight hearings on vocational education tentatively scheduled for May–June, 1980.

On January 25, 1980, the Special Populations Committee of the Council will meet from 3:30–5:00 P.M. at the Holiday Inn Central, East A Room, 2nd Floor. *Agenda items:*

—Discuss NACVE/NACWEP proposed study, "Increasing Sex Equity: A Study of the Impact of the VEA '76 on Sex Equity in Vocational Education;"

—Review the NACVE staff document: "Resource Personnel for Provision of Sex Equity;"

—Discuss the Vocational Education Equity Council Report, "Sex Equity Progress Report, December, 1979;"

—Discuss plans for future meetings, including Joint Task Force meetings.

On January 25, 1980, the Federal Programs Committee of the Council will meet from 3:30–5:00 P.M. at the Holiday Inn Central, East B Room, 2nd Floor to discuss and decide upon the focus of the Federal Programs Committee for 1980.

Records shall be kept of all council proceedings and shall be available for public inspection at the office of the National Advisory Council on Vocational Education, located at 425 13th Street, N.W., Suite 412, Washington, D.C. 20004. For further information call Virginia Solt (202) 376–8873

Signed at Washington, D.C. on January 7, 1980.

Raymond C. Parrott,

Executive Director, National Advisory Council on Vocational Education.

[FR Doc. 80-764 Filed 1-9-80; 8:45 am]

BILLING CODE 4110-02-M

Office of Assistant Secretary for Health

President's Council on Physical Fitness and Sports; Meeting

The President's Council on Physical Fitness and Sports (PCPFS) will hold its quarterly meeting on Thursday, January 31, 1980. The meeting will be held from 10 a.m. to 4 p.m., in Room 2010, New Executive Office Building, 17th & Pennsylvania Avenue, N.W., Washington, D.C.

The purpose of the meeting is to report on ongoing projects and to discuss future directions of the PCPFS.

A list of Council members and the Executive Order, dated September 25, 1970, amended October 25, 1976, establishing their responsibilities, may be obtained from: C. Carson Conrad, Executive Director, President's Council on Physical Fitness and Sports, Washington, D.C. 20201, telephone: 202/755–7947. The meeting will be open to the public.

Dated: December 31, 1979.

V. L. Nicholson,

Acting Executive Director, President's Council on Physical Fitness and Sports.

[FR Doc. 80-836 Filed 1-9-80; 8:45 am]

BILLING CODE 4110-85-M

Public Health Service

Health Maintenance Organizations

AGENCY: Public Health Service, HEW.

ACTION: Notice, Continued Regulation of Health Maintenance Organizations.

SUMMARY: Notice is given that on May 12, 1978, the Acting Assistant Secretary for Health of the Public Health Service, HEW, determined that HealthCare of Louisville, Inc., 4545 Bishop Lane, Louisville, Kentucky 40218, a federally qualified health maintenance organization (HMO), was not in compliance with the assurances it provided to the Secretary that it would maintain a fiscally sound operation.

FOR FURTHER INFORMATION CONTACT: Howard R. Veit, Director, Office of Health Maintenance Organizations, Park Building—3rd Floor, 12420 Parklawn Drive, Rockville, Maryland 20857, 301/443–4106.

SUPPLEMENTARY INFORMATION: Under Section 1312(b)(1) of the Public Health Service Act (42 U.S.C. 300e–11(b)(1)), if the Secretary makes a determination under section 1312(a) that a qualified HMO is not organized or operated in the manner prescribed by section 1301(c), then the HMO shall be (1) notified in writing of the determination, and (2) directed to initiate corrective action to bring it into compliance with the assurances it provided to the Secretary under section 1310(d)(1). Section 1312(b)(1) also provided that the Secretary shall publish in the **Federal Register** notices of determinations made under that section.

The Assistance Secretary for Health determined that HealthCare of Louisville was not in compliance with the assurance it provided the Secretary that it would maintain a fiscally sound operation. This determination of noncompliance does not affect the status of HealthCare of Louisville as a federally qualified HMO. Rather, HealthCare of Louisville has been given the opportunity to and has in fact initiated corrective action to bring itself into compliance with the assurances it gave the Secretary. The Secretary will make a determination at a later date, which will be published in the **Federal Register**, as to whether HealthCare of Louisville has statified the criteria for reestablishing compliance with its assurances.

Dated: December 31, 1979.

Howard R. Veit,

Director, Office of Health Maintenance Organizations.

[FR Doc. 80-723 Filed 1-9-80; 8:45 am]

BILLING CODE 4110-85-M

Health Maintenance Organizations

AGENCY: Public Health Service, HEW.

ACTION: Notice, Continued Regulation of Health Maintenance Organizations.

SUMMARY: Notice is given that on February 23, 1979, the Director of the Office of Health Maintenance Organizations (OHMO) of the Public Health Service, HEW, determined that HMO Concepts, Inc., 1900 Chris Lane, Anaheim, California 92805, a federally qualified health maintenance organization (HMO), was not in compliance with the assurances it provided to the Secretary that it would maintain (1) a fiscally sound operation and (2) satisfactory administrative and managerial arrangements.

FOR FURTHER INFORMATION CONTACT: Howard R. Veit, Director, Office of Health Maintenance Organizations,

Park Building—3rd Floor, 12420 Parklawn Drive, Rockville, Maryland 20857, 301/443-4106.

SUPPLEMENTARY INFORMATION: Under Section 1312(b)(1) of the Public Health Service Act (42 U.S.C. 300e-11(b)(1)), if the Secretary makes a determination under section 1312(a) that a qualified HMO is not organized or operated in the manner prescribed by section 1301(c), then the HMO shall be (1) notified in writing of the determination, and (2) directed to initiate corrective action to bring it into compliance with the assurances it provided to the Secretary under section 1310(d)(1). Section 1312(b)(1) also provides that the Secretary shall publish in the **Federal Register** notices of determinations made under that section.

The Director, OHMO, determined that HMO Concepts was not in compliance with the assurances it provided the Secretary that it would maintain a fiscally sound operation and satisfactory administrative and managerial arrangements. This determination of noncompliance does not affect the status of HMO Concepts as a federally qualified HMO. Rather, HMO Concepts has been given the opportunity to and has in fact initiated corrective action to bring itself into compliance with the assurances it gave the Secretary. The Secretary will make a determination at a later date, which will be published in the **Federal Register**, as to whether HMO Concepts has satisfied the criteria for reestablishing compliance with its assurances.

Dated: December 31, 1979.

Howard R. Veit,

Director, Office of Health Maintenance Organizations.

[FR Doc. 80-724 Filed 1-9-80; 8:45 am]

BILLING CODE 4110-85-M

DEPARTMENT OF THE INTERIOR

Bureau of Land Management

[AA-6981-A]

Alaska Native Claims Selection

On November 19, 1974, Haida Corporation, for the Native village of Hydaburg, filed selection application AA-6981-A, under the provisions of Sec. 16(b) of the Alaska Native Claims Settlement Act of December 18, 1971 (85 Stat. 688, 706; 43 U.S.C. 1601, 1615(b)) (ANCSA), for the surface estate of certain lands in the vicinity of Hydaburg.

As to the lands described below, the application, as amended, is properly filed and meets the requirements of the Alaska Native Claims Settlement Act and of the regulations issued pursuant thereto. These lands do not include any lawful entry perfected under or being maintained in compliance with laws leading to acquisition of title.

In view of the foregoing, the surface estate of the following described lands, selected pursuant to Sec. 16(b) of ANCSA, aggregating 40.00 acres, is considered proper for acquisition by Haida Corporation and is hereby approved for conveyance pursuant to Sec. 14(b) of ANCSA:

Copper River Meridian, Alaska

T. 77 S., R. 84 E.
Sec. 20, NE¼NW¼.
Containing 40 acres.

The conveyance issued for the surface estate of the lands described above shall contain the following reservation to the United States:

The subsurface estate therein, and all rights, privileges, immunities, and appurtenances, of whatsoever nature, accruing unto said estate pursuant to the Alaska Native Claims Settlement Act of December 18, 1971 (85 Stat. 688, 704; 43 U.S.C. 1601, 1613(f)).

There are no easements to be reserved to the United States pursuant to Sec. 17(b) of ANCSA.

The grant of the above-described lands shall be subject to:

1. Valid existing rights therein, if any, including but not limited to those created by any lease (including a lease issued under Sec. 6(g) of the Alaska Statehood Act of July 7, 1958 (72 Stat. 339, 341; 48 U.S.C. Ch. 2, Sec. 6(g))), contract, permit, right-of-way, or easement, and the right of the lessee, contractee, permittee, or grantee to the complete enjoyment of all rights, privileges, and benefits thereby granted to him. Further, pursuant to Sec. 17(b)(2) of the Alaska Native Claims Settlement Act of December 18, 1971 (43 U.S.C. 1601, 1616(b)) (ANCSA), any valid existing right recognized by ANCSA shall continue to have whatever right of access as is now provided for under existing law;

2. Requirements of Sec. 22(k) of the Alaska Native Claims Settlement Act of December 18, 1971 (85 Stat. 688, 715; 43 U.S.C. 1601, 1621(k)), that, until December 18, 1983, the portion of the above-described lands located within the boundaries of a national forest shall be managed under the principles of sustained yield and under management practices for protection and enhancement of environmental quality no less stringent than such management practices on adjacent national forest lands; and

3. Requirements of Sec. 14(c) of the Alaska Native Claims Settlement Act of December 18, 1971 (85 Stat. 688, 703; 43 U.S.C. 1601, 1613(c)), that the grantee hereunder convey those portions, if any, of the lands hereinabove granted, as are prescribed in said section.

Haida Corporation is entitled to conveyance of 23,040 acres of land selected pursuant to Sec. 16(b) of ANCSA. Together with the lands herein approved, the total acreage conveyed or approved for conveyance is approximately 20,810.16 acres. The remaining entitlement of approximately 2,229.84 acres will be conveyed at a later date.

Pursuant to Sec. 14(f) of ANCSA, conveyance to the subsurface estate of the lands described above shall be granted to Sealaska Corporation when conveyance is granted to Haida Corporation for the surface estate, and shall be subject to the same conditions as the surface conveyance.

There are no inland water bodies considered to be navigable within the above described lands.

In accordance with Departmental regulation 43 CFR 2650.7(d), notice of this decision is being published once in the **Federal Register** and once a week, for four (4) consecutive weeks, in the KETCHIKAN DAILY NEWS. Any party claiming a property interest in lands affected by this decision may appeal the decision to the Alaska Native Claims Appeal Board, P.O. Box 2433, Anchorage, Alaska 99510 with a copy served upon both the Bureau of Land Management, Alaska State Office, 701 C Street, Box 13, Anchorage, Alaska 99513 and the Regional Solicitor, Office of the Solicitor, 510 L Street, Suite 408, Anchorage, Alaska 99501, also:

1. Any party receiving service of this decision shall have 30 days from the receipt of this decision to file an appeal.

2. Any unknown parties, any parties unable to be located after reasonable efforts have been expended to locate, and any parties who failed or refused to sign the return receipt shall have until February 11, 1980 to file an appeal.

3. Any party known or unknown who may claim a property interest which is adversely affected by this decision shall be deemed to have waived those rights which were adversely affected unless an appeal is timely filed with the Alaska Native Claims Appeal Board.

To avoid summary dismissal of the appeal, there must be strict compliance with the regulations governing such appeals. Further information on the manner of and requirements for filing an appeal may be obtained from the Bureau

of Land Management, 701 C Street, Box 13, Anchorage, Alaska 99513.

If an appeal is taken, the parties to be served with a copy of the notice of appeal are:

Haida Corporation, Box 89, Hydaburg, Alaska 99922.
Sealaska Corporation, One Sealaska Plaza, Suite 400, Juneau, Alaska 99801.

Sue A. Wolf,
Chief, Branch of Adjudication.

[FR Doc. 80-743 Filed 1-9-80; 8:45 am]
BILLING CODE 4310-84-M

[AA-6690-A through AA-6690-L]

Alaska Native Claims Selections

Pedro Bay Corporation filed selection application AA-6690-A on April 18, 1974 and applications AA-6690-B through AA-6690-L on October 17, 1974, for the Native village of Pedro Bay, under the provisions of Sec. 12, of the Alaska Native Claims Settlement Act of December 18, 1971 (85 Stat. 688, 701; 43 U.S.C. 1601, 1611 (1976)) (ANCSA), for the surface estate of certain lands in the vicinity of Pedro Bay.

On November 14, 1978, the State filed general purposes grant selection applications AA-21631, AA-21632, AA-21633, AA-21634, AA-21651, AA-21652, AA-21653, AA-21674, AA-21675 and AA-21676, all as amended, pursuant to Sec. 6(b) of the Alaska Statehood Act of July 7, 1958 (72 Stat. 339, 340; 48 U.S.C. Ch. 2, Sec. 6(b)), for certain lands in the Pedro Bay area.

The following described lands have been properly selected by Pedro Bay Corporation. Section 6(b) of the Alaska Statehood Act of July 7, 1958, provides that the State may select *vacant, unappropriated* and *unreserved* public lands in Alaska. Therefore, the following State selection applications are hereby rejected as to the following described lands:

Seward Meridian, Alaska (Unsurveyed)

State Selection AA-21631

T. 4 S., R. 26 W.
Secs. 6 and 7, all;
Secs. 16 to 19, inclusive, all;
Sec. 20, excluding Native allotment AA-6753 Parcel B;
Sec. 21, all;
Sec. 29, excluding Native allotment AA-6753 Parcel B;
Secs. 30 and 31, all.
Containing approximately 6,931 acres.

State Selection AA-21632

T. 4 S., R. 27 W.
Secs. 12 and 13, all;
Sec. 14, excluding Native allotment AA-6734 Parcel A;
Sec. 22, excluding Native allotment A-061262 Parcel B;
Secs. 23, 24 and 25, all;
Sec. 26, excluding Native allotment AA-8064 Parcel C and Iliamna Lake;
Sec. 27, excluding Native allotment A-061262 Parcel B and Iliamna Lake;
Sec. 28, excluding Native allotment AA-6025 Parcel C and Iliamna Lake;
Sec. 29, excluding Native allotments AA-286, AA-8060, A-062761 and Iliamna Lake;
Sec. 30, excluding Native allotments A-062760 and A-062761;
Sec. 31, excluding Native allotments AA-6081, A-062760 and Iliamna Lake;
Sec. 32, excluding Iliamna Lake;
Sec. 33, excluding Native allotment AA-6025 Parcel C and Iliamna Lake;
Sec. 34, excluding U.S. Survey 2895, U.S. Survey 3161, U.S. Survey 3920 and Iliamna Lake;
Sec. 35, excluding Native allotments AA-3102, AA-6055 and Iliamna Lake;
Sec. 36, excluding Native allotment AA-6055.
Containing approximately 7,847 acres.

State Selection AA-21633

T. 4 S., R. 29 W.
Sec. 19, excluding Native allotment A-062194 Parcel B;
Sec. 20, excluding Native allotments A-062194 Parcel B, AA-7724 and AA-7844;
Sec. 21, excluding Native allotment AA-7844;
Sec. 24, excluding Native allotments A-063898 Parcel A and A-063273;
Sec. 25, excluding Native allotment A-063273 and Iliamna Lake;
Sec. 26, excluding Native allotments AA-8064 Parcel A, A-063274 Parcel A, A-063273 and Iliamna Lake;
Sec. 27, excluding Iliamna Lake;
Sec. 28, excluding Native allotment AA-7844 and Iliamna Lake;
Sec. 30, excluding U.S. Survey 1751, Native allotment A-062194 Parcel B and Iliamna Lake;
Sec. 31, excluding U.S. Survey 1751 and Iliamna Lake;
Secs. 32 to 36, inclusive, excluding Iliamna Lake.
Containing approximately 4,208 acres.

State Selection AA-21634

T. 4 S., R. 30 W
Sec. 25, excluding Native allotment AA-6048;
Sec. 26, excluding Native allotment AA-8066;
Sec. 27, excluding Native allotments AA-7721 and AA-827;
Sec. 28, excluding Native allotments AA-7111 Parcel A, AA-7150 Parcel B, AA-7721 and Iliamna Lake;
Sec. 29, excluding Iliamna Lake;
Sec. 30, all;
Sec. 31, excluding Mineral Survey 1510;
Sec. 32, excluding Iliamna Lake;
Sec. 33, excluding Native allotments AA-7111 Parcel A, AA-7150 Parcel B and Iliamna Lake;
Sec. 34, excluding Native allotment AA-827 and Iliamna Lake;
Sec. 35, excluding Native allotment AA-8066 and Iliamna Lake;
Sec. 36, excluding Native allotment AA-6048 and Iliamna Lake.
Containing approximately 4,740 acres.

T. 5 S., R. 30 W.
Sec. 1, excluding Native allotment AA-7241 and Iliamna Lake;
Secs. 3 and 4, excluding Iliamna Lake;
Secs. 12, 13 and 14, excluding Iliamna Lake;
Secs. 18, 19 and 20, excluding Iliamna Lake;
Secs. 22 to 28, inclusive, excluding Iliamna Lake;
Secs. 30 and 31, excluding Iliamna Lake;
Sec. 33, excluding Iliamna Lake.
Containing approximately 1,774 acres.

State Selection AA-21651

T. 5 S., R. 27 W
Secs. 2 and 3, all;
Sec. 4, excluding U.S. Survey 2895, U.S. Survey 3161, U.S. Survey 3526, U.S. Survey 3920, Native allotments AA-6025 Parcels A and B, A-063898 Parcel B and Iliamna Lake;
Sec. 5, excluding U.S. Survey 2895 and Iliamna Lake;
Secs. 6, 7 and 8, excluding Iliamna Lake;
Sec. 9, excluding U.S. Survey 893, Native allotments AA-6025 Parcel B and A-062887 Tract II;
Sec. 10, excluding Native allotment AA-7125 Parcel A;
Secs. 11 and 14, all;
Sec. 15, excluding U.S. Survey 1750, Native allotments AA-7125 Parcel A and AA-8064 Parcel B;
Sec. 16, excluding U.S. Survey 1750, Native allotments A-062887 Tract II and AA-1032 Parcel B;
Sec. 17, excluding Native allotment AA-7350;
Secs. 18 and 19, excluding Native allotment AA-6080 and Iliamna Lake;
Secs. 20 and 21, all;
Secs. 23 to 26, inclusive, all.
Containing approximately 11,690 acres.

State Selection AA-21652

T. 5 S., R. 28 W.
Secs. 1, 2 and 3, excluding Iliamna Lake;
Sec. 4, excluding Native allotment AA-3749;
Sec. 5 excluding U.S. Survey 5201 lot 2, Native allotments AA-3749, AA-6734 Parcel B, AA-7913, AA-8062 and Iliamna Lake;
Sec. 6, excluding U.S. Survey 4883, Native allotments AA-962, AA-6095 Parcel A, AA-7910 and Iliamna Lake;
Sec. 7, excluding Native allotment AA-7565 Parcel A and Iliamna Lake;
Sec. 8, excluding U.S. Survey 5552, Native allotments AA-6734 Parcel B, AA-7565 Parcels A and B and Iliamna Lake;
Sec. 9, excluding Native allotment AA-7565 Parcel B and Iliamna Lake;
Secs. 10 and 12, excluding Iliamna Lake;
Sec. 13, excluding Native allotment AA-6095 Parcel B and Iliamna Lake;
Secs. 15 to 22, inclusive, excluding Iliamna Lake;
Sec. 23, excluding Native allotment A-062887 Tract I and Iliamna Lake;
Sec. 24, excluding Iliamna Lake;
Sec. 26, all;
Secs. 27 and 28, excluding Iliamna Lake;
Secs. 30 to 33, inclusive, excluding Iliamna Lake;
Sec. 34, all.
Containing approximately 7,602 acres.

State Selection AA-21653

U.S. Survey 4819, Lots 1 and 2, situated on the westerly shore of Porcupine Island in Iliamna Lake.
Containing 20.15 acres.

T. 5 S., R. 29 W.
Sec. 1, excluding U.S. Survey 4883, Native allotments AA-962, AA-6095 Parcel A, AA-6280 and A-062413 and Iliamna Lake;
Sec. 2, excluding Native allotment AA-7911 Parcel B and Iliamna Lake;
Sec. 3, excluding Native allotment AA-2379 Parcel A and Iliamna Lake;
Secs. 4 to 8, inclusive, excluding Iliamna Lake;
Sec. 9, excluding Native allotment AA-7148 and Iliamna Lake;
Sec. 10, excluding Native allotments AA-2379 Parcel B, AA-7148 and Iliamna Lake;
Sec. 11, excluding Iliamna Lake;
Sec. 12, excluding Native allotment AA-6280 and Iliamna Lake;
Secs. 13 to 20, inclusive, excluding Iliamna Lake;
Secs. 21 and 22, excluding U.S. Survey 4819 and Iliamna Lake;
Sec. 23, all;
Secs. 24 to 30, inclusive, excluding Iliamna Lake;
Secs. 32 to 36, inclusive, excluding Iliamna Lake.

Containing approximately 10,141 acres.

State Selection AA-21674

T. 6 S., R. 28 W.
Secs. 5, 6 and 7, excluding Iliamna Lake.

Containing approximately 1,184 acres.

State Selection AA-21675

T. 6 S., R. 29 W.
Secs. 3, 6 and 7, excluding Iliamna Lake;
Sec. 8, excluding Native allotment AA-7349 and Iliamna Lake;
Secs. 9 to 12, inclusive, excluding Iliamna Lake;
Secs. 15 and 16, all;
Secs. 17 and 18, excluding Iliamna Lake.

Containing approximately 3,714 acres.

State Selection AA-21676

T. 6 S., R. 30 W.
Sec. 8, excluding Iliamna Lake;
Secs. 12 to 18, inclusive, excluding Iliamna Lake.

Containing approximately 2,700 acres.
Aggregating approximately 62,551 acres.

Further action on the above State selection applications as to those lands not rejected herein, will be taken at a later date.

The State selected lands rejected above were not valid selections and will not be charged against the village corporation as State selected lands.

As to the lands described below, the applications submitted by Pedro Bay Corporation, as amended, are properly filed, and meet the requirements of the Alaska Native Claims Settlement Act and of the regulations issued pursuant thereto. These lands do not include any lawful entry perfected under or being maintained in compliance with laws leading to acquisition of title.

In view of the foregoing, the surface estate of the following described lands, selected pursuant to Sec. 12(a), agregating approximately 84,769 acres, is considered proper for acquisition by Pedro Bay Corporation and is hereby approved for conveyance pursuant to Sec. 14(a) of the Alaska Native Claims Settlement Act:

U.S. Survey 4819, Lots 1 and 2, situated on the westerly shore of Porcupine Island in Iliamna Lake.

Containing 20.15 acres.

Seward Meridian, Alaska (Unsurveyed)

T. 4 S., R. 26 W.
Secs. 6 and 7, all;
Secs. 16 to 19, inclusive, all;
Sec. 20, excluding Native allotment AA-6753 Parcel B;
Sec. 21, all;
Sec. 29, excluding Native allotment AA-6753 Parcel B;
Secs. 30 and 31, all.

Containing approximately 6,931 acres.

T. 4 S., R. 27 W.
Secs. 12 and 13, all;
Sec. 14, excluding Native allotment AA-6734 Parcel A;
Sec. 22, excluding Native allotment A-061262 Parcel B;
Secs. 23, 24 and 25, all;
Sec. 26, excluding Native allotment AA-8064 Parcel C and Iliamna Lake;
Sec. 27, excluding Native allotment A-061262 Parcel B and Iliamna Lake;
Sec. 28, excluding Native allotment AA-6025 Parcel C and Iliamna Lake;
Sec. 29, excluding Native allotments AA-286, AA-8060, A-062761 and Iliamna Lake;
Sec. 30, excluding Native allotments A-062760 and A-062761;
Sec. 31, excluding Native allotments AA-6081, A-062760 and Iliamna Lake;
Sec. 32, excluding Iliamna Lake;
Sec. 33, excluding Native allotment AA-6025 Parcel C and Iliamna Lake;
Sec. 34, excluding U.S. Survey 2895, U.S. Survey 3161, U.S. Survey 3920 and Iliamna Lake;
Sec. 35, excluding Native allotments AA-3102, AA-6055 and Iliamna Lake;
Sec. 36, excluding Native allotment AA-6055.

Containing approximately 7,847 acres.

T. 5 S., R. 27 W.
Secs. 2 and 3, all;
Sec. 4, excluding U.S. Survey 2895, U.S. Survey 3161, U.S. Survey 3526, U.S. Survey 3920, Native allotments AA-6025 Parcels A and B, A-063898 Parcel B and Iliamna Lake;
Sec. 5, excluding U.S. Survey 2895 and Iliamna Lake;
Secs. 6, 7 and 8, excluding Iliamna Lake;
Sec. 9, excluding U.S. Survey 893, Native allotments AA-6025 Parcel B and A-062887 Tract II;
Sec. 10, excluding Native allotment AA-7125 Parcel A;
Secs. 11 and 14, all;
Sec. 15, excluding U.S. Survey 1750, Native allotments AA-7125 Parcel A and AA-8064 Parcel B;
Sec. 16, excluding U.S. Survey 1750, Native allotments A-062887 Tract II and AA-1032 Parcel B;
Sec. 17, excluding Native allotment AA-7350;
Secs. 18 and 19, excluding Native allotment AA-6080 and Iliamna Lake;
Secs. 20 and 21, all;
Secs. 23 to 26, inclusive, all.

Containing approximately 11,690 acres.

T. 4 S., R. 28 W.
Secs. 1 to 18, inclusive, all;
Sec. 19, excluding Native allotment A-062076;
Secs. 20 to 28, inclusive, all;
Sec. 29, excluding Native allotment A-062076;
Sec. 30, excluding U.S. Survey 4821, Native allotment A-062076 and Iliamna Lake;
Sec. 31, excluding Iliamna Lake;
Sec. 32, excluding U.S. Survey 5577 lot 1, U.S. Survey 5201 lot 1, U.S. Survey 2886, Native allotments A-062194 Parcel A, A-062413 and Iliamna Lake;
Sec. 33, excluding U.S. Survey 5577 lot 2, U.S. Survey 5201 lot 1, U.S. Suvey 2886, U.S. Survey 2302, Native allotments AA-7911 Parcel A, AA-7910, AA-6722, AA-1032 Parcel A, A-061262 Parcel A, A-067524 and Iliamna Lake;
Secs. 34 and 35, all;
Sec. 36, excluding Iliamna Lake.

Containing approximately 22,218 acres.

T. 5 S., R. 28 W.
Secs. 1, 2, and 3, excluding Iliamna Lake;
Sec. 4, excluding Native allotment AA-3749;
Sec. 5, excluding U.S. Survey 5201 lot 2, Native allotments AA-3749, AA-6734 Parcel B, AA-7913, AA-8062 and Iliamna Lake;
Sec. 6, excluding U.S. Survey 4883, Native allotments AA-962, AA-6095 Parcel A, AA-7910 and Iliamna Lake;
Sec. 7, excluding Native allotment AA-7565 Parcel A and Iliamna Lake;
Sec. 8, excluding U.S. Survey 5552, Native allotments AA-6734 Parcel B, AA-7565 Parcels A and B and Iliamna Lake;
Sec. 9, excluding Native allotment AA-7565 Parcel B and Iliamna Lake;
Secs. 10 and 12, excluding Iliamna Lake;
Sec. 13, excluding Native allotment AA-6095 Parcel B and Iliamna Lake;
Secs. 15 to 22, inclusive, excluding Iliamna Lake;
Sec. 23, excluding Native allotment A-062887 Tract I and Iliamna Lake;
Sec. 24, excluding Iliamna Lake;
Sec. 26, all;
Secs. 27 and 28, excluding Iliamna Lake;
Secs. 30 to 33, inclusive, excluding Iliamna Lake;
Sec. 34, all.

Containing approximately 7,602 acres.

T. 6 S., R. 28 W.
Secs. 5, 6 and 7, excluding Iliamna Lake.

Containing approximately 1,184 acres.

T. 4 S., R. 29 W.
Sec. 19, excluding Native allotment A-062194 Parcel B;
Sec. 20, excluding Native allotments A-062194 Parcel B, AA-7724 and AA-7844;
Sec. 21, excluding Native allotment AA-7844;
Sec. 24, excluding Native allotments A-063898 Parcel A and A-063273;
Sec. 25, excluding Native allotment A-063273 and Iliamna Lake;
Sec. 26, excluding Native allotments AA-8064 Parcel A, A-063274 Parcel A, A-063273 and Iliamna Lake;
Sec. 27, excluding Iliamna Lake;
Sec. 28, excluding Native allotment AA-7844 and Iliamna Lake;

Sec. 30, excluding U.S. Survey 1751, Native allotment A-062194 Parcel B and Iliamna Lake;
Sec. 31, excluding U.S. Survey 1751 and Iliamna Lake;
Secs. 32 to 36, inclusive, excluding Iliamna Lake.
Containing approximately 4,208 acres.

T. 5 S., R. 29 W.
Sec. 1, excluding U.S. Survey 4883, Native allotments AA-962, AA-6095 Parcel A, AA-6280 and A-062413 and Iliamna Lake;
Sec. 2, excluding Native allotment AA-7911 Parcel B and Iliamna Lake;
Sec. 3, excluding Native allotment AA-2379 Parcel A and Iliamna Lake;
Secs. 4 to 8, inclusive, excluding Iliamna Lake;
Sec. 9, excluding Native allotment AA-7148 and Iliamna Lake;
Sec. 10, excluding Native allotments AA-2379 Parcel B, AA-7148 and Iliamna Lake;
Sec. 11, excluding Iliamna Lake;
Sec. 12, excluding Native allotment AA-6280 and Iliamna Lake;
Secs. 13 to 20, inclusive, excluding Iliamna Lake;
Secs. 21 and 22, excluding U.S. Survey 4819 and Iliamna Lake;
Sec. 23, all;
Secs. 24 to 30, inclusive, excluding Iliamna Lake;
Secs. 32 to 36, inclusive, excluding Iliamna Lake.
Containing approximately 10,141 acres.

T. 6 S., R. 29 W.
Secs. 3, 6 and 7, excluding Iliamna Lake;
Sec. 8, excluding Native allotment AA-7349 and Iliamna Lake;
Secs. 9 to 12, inclusive, excluding Iliamna Lake;
Secs. 15 and 16, all;
Secs. 17 and 18, excluding Iliamna Lake.
Containing approximately 3,714 acres.

T. 4 S., R. 30 W.
Sec. 25, excluding Native allotment AA-6048;
Sec. 26, excluding Native allotment AA-6066;
Sec. 27, excluding Native allotments AA-7721 and AA-827;
Sec. 28, excluding Native allotments AA-7111 Parcel A, AA-7150 Parcel B, AA-7721 and Iliamna Lake;
Sec. 29, excluding Iliamna Lake;
Sec. 30, all;
Sec. 31, excluding Mineral Survey 1510;
Sec. 32, excluding Iliamna Lake;
Sec. 33, excluding Native allotments AA-7111 Parcel A, AA-7150 Parcel B and Iliamna Lake;
Sec. 34, excluding Native allotment AA-827 and Iliamna Lake;
Sec. 35, excluding Native allotment AA-8066 and Iliamna Lake;
Sec. 36, excluding Native allotment AA-6048 and Iliamna Lake.
Containing approximately 4,740 acres.

T. 5 S., R. 30 W.
Sec. 1, excluding Native allotment AA-7241 and Iliamna Lake;
Secs. 3 and 4, excluding Iliamna Lake;
Secs. 12, 13 and 14, excluding Iliamna Lake;
Secs. 18, 19 and 20, excluding Iliamna Lake;
Secs. 22 to 28, inclusive, excluding Iliamna Lake;
Secs. 30 and 31, excluding Iliamna Lake;
Sec. 33, excluding Iliamna Lake.
Containing approximately 1,774 acres.

T. 6 S., R. 30 W.
Sec. 8, excluding Iliamna Lake;
Secs. 12 to 18, inclusive, excluding Iliamna Lake.
Containing approximately 2,700 acres.
Aggregating approximately 84,769 acres.

The conveyance issued for the surface estate of the lands described above shall contain the following reservation to the United States:

1. The subsurface estate therein, and all rights, privileges, immunities and appurtenances, of whatsoever nature, accruing unto said estate pursuant to the Alaska Native Claims Settlement Act of December 18, 1971 (85 Stat. 688, 704; 43 U.S.C. 1601, 1613(f)); and

2. Pursuant to Sec. 17(b) of the Alaska Native Claims Settlement Act of December 18, 1971 (85 Stat. 688, 708; 43 U.S.C. 1601, 1616(b)), the following public easements, referenced by easement identification number (EIN) on the easement maps attached to this document, copies of which will be found in case file AA-6690-EE are reserved to the United States. All easements are subject to applicable Federal, State, or municipal corporation regulation. The following is a listing of uses allowed for each type of easement. Any uses which are not specifically listed are prohibited.

25 Foot Trail—The uses allowed on a twenty-five (25) foot wide trail easement are: travel by foot, dogsled, animals, snowmobiles, two and three-wheel vehicles, and small all-terrain vehicles (less than 3,000 lbs. Gross Vehicle Weight (GVW)).

60 Foot Road—The uses allowed on a sixty (60) foot wide road easement are: travel by foot, dogsled, animals, snowmobiles, two and three-wheel vehicles, small and large all-terrain vehicles, track vehicles, four-wheel drive vehicles, automobiles, and trucks.

One Acre Site—The uses allowed for a site easement are: vehicle parking (e.g., aircraft, boats, ATV's snowmobiles, cars, trucks), temporary camping, and loading or unloading. Temporary camping, loading or unloading shall be limited to 24 hours.

a. (EIN 2c D9) A one (1) acre site easement upland of the ordinary high water mark in Sec. 28, T. 4 S., R. 27 W., Seward Meridian, on the north shore of Lonesome Bay. The uses allowed are those listed above for a one (1) acre site.

b. (EIN 2d D9) A one (1) acre site easement upland of the ordinary high water mark in Sec. 4, T. 5 S., R. 27 W., Seward Meridian, on the south shore of Pile Bay. The uses allowed are those listed above for a one (1) acre site.

c. (EIN 2e D9) A one (1) acre site easement upland of the ordinary high water mark in Sec. 18, T. 6 S., R. 29 W., Seward Meridian, on the south shore of Lake Iliamna and west of Squirrel Point. The uses allowed are those listed above for a one (1) acre site.

d. (EIN 2f D9) A one (1) acre site easement upland of the ordinary high water mark in Sec. 10, T. 5 S., R. 29 W., Seward Meridian, on the north shore of Pedro Bay. The uses allowed are those listed above for a one (1) acre site.

e. (EIN 5a D9) A one (1) acre site easement upland of the ordinary high water mark in Sec. 24, T. 5 S., R. 28 W., Seward Meridian, on the south shore of Pile Bay and the left bank of the Iliamna River at its confluence with Lake Iliamna. The uses allowed are those listed above for a one (1) acre site.

f. (EIN 5b D9) A site easement upland of the ordinary high water mark in Sec. 10, T. 5 S., R. 27 W., Seward Meridian, on the right bank of the Iliamna River near the Pile Bay-Cook Inlet road crossing. The site is one (1) acre in size with an additional twenty-five (25) foot wide easement on the bed of the Iliamna River along the entire waterfront of the site. The uses allowed are those listed above for a one (1) acre site.

g. (EIN 6d D9) A one (1) acre site easement upland of the ordinary high water mark in Sec. 33, T. 4 S., R. 30 W. Seward Meridian, on the north shore of Chekok Bay on the north shore of Lake Iliamna. The uses allowed are those listed above for a (1) acre site.

h. (EIN 7 D9, L) An easement sixty (60) feet in width for an existing road from Pile Bay in Sec. 35, T. 4 S., R. 27 W., Seward Meridian, southeasterly to Williamsport on Cook Inlet, with the condition that there cuts and fills have caused this easement to exceed sixty (60) feet in width, that prevailing conditions be considered an allowable width. The uses allowed are those listed above for a sixty (60) foot wide road easement.

i. (EIN 14 D1 D9 L) An easement for an existing access trail twenty-five (25) feet in width from road EIN 7 D9, L in Sec. 9, T. 5 S., R. 27 W., Seward Meridian, southerly to public land. The uses allowed are those listed above for a twenty-five (25) foot wide trail easement.

j. (EIN 15 C5) An easement for a proposed access trail twenty-five (25) feet in width from site EIN 2e D9 in Sec. 18, T. 6 S., R. 29 W., Seward Meridian, southerly to public lands. The uses allowed are those listed above for a twenty-five (25) foot wide trail easement.

k. (EIN 17 C4, D9) An easement for a proposed access trail twenty-five (25) feet in width from site EIN 21a C4 located on the north shore of Knutson Bay in Sec. 29, T. 4 S., R. 29 W., Seward Meridian, northerly to public lands. The uses allowed are those listed above for a twenty-five (25) foot wide trail easement.

l. (EIN 18 C4) An easement for a proposed access trail twenty-five (25) feet in width from Sec. 33, T. 5 S., 28 W., Seward Meridian, southerly to public lands. The uses allowed are those listed above for a twenty-five (25) foot wide trail easement.

m. (EIN 19 C4) An easement for a proposed access trail twenty-five (25) feet in width from the Iliamna River in Sec. 2, T. 5 S., R. 27 W., Seward Meridian, easterly to public lands. The uses allowed are those listed above for a twenty-five (25) foot wide trail easement.

n. (EIN 20 C4) An easement for a proposed access trail twenty-five (25) feet in width from Lonesome Bay on Lake Iliamna in Sec. 30, T. 4 S., R. 27 W., Seward Meridian, northerly to public lands. The uses allowed

are those listed above for a twenty-five (25) foot wide trail easement.

o. (EIN 21a C4) A one (1) acre site easement upland of the ordinary high water mark in Sec. 29, T. 4 S., R. 29 W., Seward Meridian, on the north shore of Knutson Bay on Lake Iliamna. The uses allowed are those listed above for a one (1) acre site.

p. (EIN 26 E) An easement for a proposed access trail twenty-five (25) feet in width from site EIN 6d, D9 on the north shore of Chekok Bay on Lake Iliamna in Sec. 33, T. 4 S., R. 30 W., Seward Meridian, northerly to public lands. The uses allowed are those listed above for a twenty-five (25) foot wide trail easement.

The grant of lands shall be subject to:

1. Issuance of a patent confirming the boundary description of the lands hereinabove granted after approval and filing by the Bureau of Land Management of the official plat of survey covering such lands;

2. Valid existing rights therein, if any, including but not limited to those created by any lease (including a lease issued under Sec. 6(g) of the Alaska Statehood Act of July 7, 1958 (72 Stat. 339, 341; 48 U.S.C. Ch. 2, Sec. 6(g))), contract, permit, right-of-way or easement, and the right of the lessee, contractee, permitee or grantee to the complete enjoyment of all rights, privileges and benefits thereby granted to him. Further, pursuant to Sec. 17(b)(2) of the Alaska Native Claims Settlement Act of December 18, 1971 (43 U.S.C. 1601, 1616(B)(2)) (ANCSA), any valid existing right recognized by ANCSA shall continue to have whatever right of access as is now provided for under existing law; and

3. Requirements of Sec. 14(c) of the Alaska Native Claims Settlement Act of December 18, 1971 (85 Stat. 688, 703; 43 U.S.C. 1601, 1613(c) (1976)), that the grantee hereunder convey those portions, if any, of the lands hereinabove granted, as are prescribed in said section.

Pedro Bay Corporation is entitled to conveyance of 92,160 acres of land selected pursuant to Sec. 12(a) of the Alaska Native Claims Settlement Act. To date, approximately 84,769 acres of this entitlement have been approved for conveyance; the remaining entitlement of approximately 7,171 acres will be conveyed at a later date.

Pursuant to Sec. 14(f) of the Alaska Native Claims Settlement Act, conveyance to the subsurface estate of the lands described above shall be granted to Bristol Bay Native Corporation when conveyance is granted to Pedro Bay Corporation for the surface estate, and shall be subject to the same conditions as the surface conveyance.

Within the described lands, only the following inland water body is considered to be navigable:

Iliamna Lake.

In accordance with Departmental regulation 43 CFR 2650.7(d), notice of this decision is being published once in the **Federal Register** and once a week, for four (4) consecutive weeks in the ANCHORAGE TIMES. Any party claiming a property interest in lands affected by this decision may appeal the decision to the Alaska Native Claims Appeal Board, P.O. Box 2433, Anchorage, Alaska 99510 with a copy served upon both the Bureau of Land Management, Alaska State Office, 701 C Street, Box 13, Anchorage, Alaska 99513 and the Regional Solicitor, Office of the Solicitor, 510 L Street, Suite 408, Anchorage, Alaska 99501, also:

1. Any party receiving service of this decision shall have 30 days from the receipt of this decision to file an appeal.

2. Any unknown parties, any parties unable to be located after reasonable efforts have been expended to locate, and any parties who failed or refused to sign the return receipt shall have until February 11, 1980 to file an appeal.

3. Any party known or unknown who may claim a property interest which is adversely affected by this decision shall be deemed to have waived those rights which were adversely affected unless an appeal is timely filed with the Alaska Native Claims Appeal Board.

To avoid summary dismissal of the appeal, there must be strict compliance with the regulations governing such appeals Further information on the manner of and requirements for filing an appeal may be obtained from the Bureau of Land Management, 701 C Street, Box 13, Anchorage, Alaska 99513.

If an appeal is taken, the adverse parties to be served are:

Pedro Bay Corporation, Pedro Bay, Alaska 99647
Bristol Bay Native Corporation, P.O. Box 198, Dillingham, Alaska 99576
State of Alaska, Department of Natural Resources, Division of Research and Development, 323 East Fourth Avenue, Anchorage, Alaska 99501

Sue A. Wolff,

Chief, Branch of Adjudication.

[FR Doc. 80-744 Filed 1-9-80; 8:45 am]

BILLING CODE 4310-84-M

[AA-26223]

Alaska; Proposed Withdrawal and Reservation of Lands; Correction

In FR Doc. 79-31552 appearing at pages 58970 and 58971 in the **Federal Register** of Friday, October 12, 1979, the following changes should be made:

1. On page 58971, the last line of the last paragraph which read 90 Stat. 7252 is corrected to read 90 Stat. 2752.

2. Immediately following the above correction, two paragraphs are added to read as follows:

Effective on the date of publication of this notice, the above-described lands shall be segregated from the operation of the public land laws, including the mining laws, to the extent that the withdrawal applied for, if and when effected, would prevent any form of disposal or appropriation under such laws. The segregative effect of this proposed withdrawal shall continue for a period of two years, unless sooner terminated by action of the Secretary of the Interior. Current administrative jurisdiction over the segregated lands will not be affected by the temporary segregation. If the withdrawal is approved, the segregation will continue for the duration of the withdrawal.

All communications (except for public hearing requests) in connection with this proposed withdrawal should be addressed to the Chief, Branch of Lands and Minerals Operations, Bureau of Land Management, Department of the Interior, 701 C Street, Box 13, Anchorage, Alaska 99513.

Jerry G. Wright,

Acting Chief, Branch of Lands and Minerals Operations.

[FR Doc. 80-707 Filed 1-9-80; 8:45 am]

BILLING CODE 4310-84-M

Arizona; Proposed Grazing Management for the Shivwits Resource Area, Mohave County, Ariz.; Public Hearing

The Bureau of Land Management will hold a Public Hearing January 30, 1980 at 7:00 PM at the Four Seasons Convention Center, 747 East St. George Boulevard, St. George, Utah.

The Public Hearing will be held to receive oral and written comments on the Draft Environmental Impact Statement on the Proposed Grazing Management Plan for the Shivwits Resource Area in Northern Mohave County, Arizona. The hearing will be presided over by a hearing officer and oral comments will be limited to ten (10) minutes. Written requests to testify should be sent to the District Manager, Arizona Strip District Office, 196 E. Tabernacle, St. George, Utah 84770.

Comments received on the draft environmental impact statement, whether written or oral, will be given equal consideration during preparation of the final environmental impact statement.

Dated: January 3, 1980.

Tom Allen,

Associate State Director.

[FR Doc. 80-708 Filed 1-9-80; 8:45 am]

BILLING CODE 4310-84-M

[CA Group 747; AZ Group 614]

California; Filing of Plat of Survey

January 3, 1980.

1. A plat of survey of the following described land, accepted December 11, 1979, will be officially filed in the California State Office, Sacramento, California, effective at 10:00 a.m. on February 20, 1980:

San Bernardino Meridian, California

Tps. 15 S., Rs. 23 & 24 E.

2. The plat represents a dependent resurvey of a portion of the west boundary, subdivisional lines and meander lines of Section 30, T. 15 S., R. 24 E., designed to restore the corners in their true original locations, according to the best available evidence, and, the accretion survey of Section 30, T. 15 S., R. 24 E. The plat also represents the extension survey of a portion of the subdivisional lines, accretion survey and survey of new meander lines of Sections 25, 35, and 36, T. 15 S., R. 23 E., together with the survey of the fixed and limiting boundary of the 1902–03 right bank of the abandoned channel of the Colorado River, along the ordinary low water line, and the informative traverse of a portion of the present banks of the Colorado River, Tps. 15 S., Rs. 23 & 24 E.

3. The above described lands are withdrawn in the Yuma Indian Reservation and not subject to disposition under the public land laws by reason of the official filing of the plat of survey.

4. The area surveyed is geographically located at the northeasterly portion of the Yuma Indian Reservation, extending southeasterly along the right bank of the Colorado River. The land is generally rich bottom land with dense brush consisting of salt cedar, willow, bamboo reed, cattail and arrowhead. The elevation ranges from 150 feet to 400 feet above sea level.

5. All inquiries relating to this land should be sent to the California State Office, Bureau of Land Management, Federal Office Building, Room E-2841, 2800 Cottage Way, Sacramento, California 95825.

Herman J. Lyttge,

Chief, Branch of Records & Data Management.

[FR Doc. 80-709 Filed 1-9-80; 8:45 am]

BILLING CODE 4310-84-M

Outer Continental Shelf Advisory Board; Mid-Atlantic Technical Working Group Committee; Meeting

Notice of this meeting is issued in accordance with the Federal Advisory Committee Act (Pub. L. 92–463).

Name: Mid-Atlantic Technical Working Group Committee.

Dates: February 6–7, 1980.

Place: The Lord Baltimore Hotel (Cavalier Room), Baltimore, Maryland.

Time: 6th: 1:00 p.m.–5:00 p.m.; 7th: 9:00 a.m.–3:00 p.m.

Committee membership consists of representatives from Federal agencies, the coastal States from New York through North Carolina, the petroleum industry, and other private interests.

Agenda: Presentations on offshore drilling and pipeline construction technology; recommendations for a transportation study for the Mid-Atlantic region.

The meeting will be open to the public. Public attendance may be limited by the space available. Persons wishing to make oral presentations to the Committee regarding matters on the agenda should contact Dick Wildermann of the New York OCS Office (212–264–2960) by January 30. Written statements should be submitted by February 14 to the New York OCS Office, Bureau of Land Management, 26 Federal Plaza, Suite 32–120, New York, New York 10007.

Minutes of the meeting will be available for public inspection and copying by April 3, 1980 at the above address.

Frank Basile,

Manager, New York OCS Office.

[FR Doc. 80-711 Filed 1-9-80; 8:45 am]

BILLING CODE 4310-84-M

Pacific Outer Continental Shelf

AGENCY: Department of the Interior, Bureau of Land Management, Pacific Outer Continental Shelf.

ACTION: Availability of official protraction diagrams.

Notice is hereby given that, effective with this publication, the following OCS Official Protraction Diagrams, approved on the dates indicated, are available, for information only, in the Pacific Outer Continental Shelf Office, Bureau of Land Management, Los Angeles, CA. In accordance with Title 43, Code of Federal Regulations, these protraction diagrams are the basic record for the description of mineral and oil and gas lease offers in the geographic area they represent.

Outer Continental Shelf Official Protraction Diagrams

Description:	*Approval date*
NH 10-3, Velero Basin	Dec. 12, 1979.
NH 11-1, Bushnell Knoll	Do.
NH 11-4, The Rampart	Do.
NI 10-9, Santa Rosa Island, Revised	Do.

Copies of these diagrams are for sale at two dollars ($2.00) per copy by the Manager, Pacific Outer Continental Shelf Office, Bureau of Land Management, 1340 West Sixth Street, Room 200, Los Angeles, CA 90017. Checks or money orders should be made payable to the Bureau of Land Management.

Harold R. Martin,

Acting Manager, Pacific Outer Continental Shelf Office.

[FR Doc. 80-710 Filed 1-9-80; 8:45 am]

BILLING CODE 4310-84-M

NATIONAL FOUNDATION ON THE ARTS AND THE HUMANITIES

Museum Panel (Museum Purchase Plan); Meeting

Pursuant to Section 10(a)(2) of the Federal Advisory Committee Act (Pub. L. 92–463), as amended, notice is hereby given that a meeting of the Museum Panel (Museum Purchase Plan) to the National Council on the Arts will be held February 12, 1980, from 9:00 a.m.–5:30 p.m., in the 11th Floor Conference Room of the Columbia Plaza Office Building, 2401 E St., N.W., Washington, D.C.

This meeting is for the purpose of Panel review, discussion, evaluation, and recommendation on applications for financial assistance under the National Foundation on the Arts and the Humanities Act of 1965, as amended, including discussion of information given in confidence to the agency by grant applicants. In accordance with the determination of the Chairman published in the Federal Register of March 17, 1977, these sessions will be closed to the public pursuant to subsection (c)(4), (6) and 9(B) of Section 552b of Title 5, United States Code.

Further information with reference to this meeting can be obtained from Mr. John H. Clark, Advisory Committee Management Officer, National Endowment for the Arts, Washington, D.C. 20506, or call (202) 634–6070.

John H. Clark,

Director, Office of Council and Panel Operation, National Endowment for the Arts.

January 3, 1980.

[FR Doc. 80-712 Filed 1-9-80; 8:45 am]

BILLING CODE 7537-01-M

NUCLEAR REGULATORY COMMISSION

[Dockets Nos. STN 50-528A, STN 50-529A and STN 50-530A]

Arizona Public Service Co., et al.;* Receipt of Operating License Application and Request for Antitrust Information

Arizona Public Service Company, et al*, acting for itself and the four other owners of the Palo Verde Nuclear Generating Station, Units 1, 2 and 3, filed the general information portion and antitrust information of application for operating licenses. This information was filed pursuant to part 2.101 of the Commission Rules and Regulations and is in connection with the owners' plans to operate three pressurized water reactors in Maricopa County, Arizona. The portion of the application filed contains antiturst information for review pursuant to NRC Regulatory Guide 9.3 to determine whether there have been any significant changes since the completion of the antitrust review at the construction permit stage.

On completion of staff antitrust review of the above-named application, the Director of Nuclear Reactor Regulation will issue an initial finding as to whether there have been "significant changes" under section 105c(2) of the Act. A copy of this finding will be published in the **Federal Register** and will be sent to the Washington and local public document rooms and to those persons providing comments or information in response to this notice. If the initial finding concludes that there have not been any significant changes, requests for reevaluation may be submitted for a period of 60 days after the date of the Federal Register notice. The results of any reevaluations that are requested will also be published in the **Federal Register** and copies sent to the Washington and local public document rooms.

A copy of the general information portion of the application for operating licenses and the antitrust information submitted is available for public examination and copying for a fee at the Commission's Public Document Room, 1717 H Street, N.W., Washington, D.C. 20555 and in the local public document room at the Phoenix Public Library, Science and Industry Section, 12 East McDowell Road, Phoenix, Arizona.

Any person who desires additional information regarding the matter covered by this notice or who wishes to have his views considered with respect to significant changes related to antitrust matters which have occurred in the licensees' activities since the construction permit antitrust reviews for the above-named plant should submit such requests for information or views to the U.S. Nuclear Regulatory Commission, Washington, D.C. 20555, Attention: Chief, Antitrust and Indeminity Group, Office of Nuclear Reactor Regulation, on or before March 3, 1980.

Dated at Bethesda, Maryland, this 17th day of December, 1979.

For the Nuclear Regulatory Commission.

Olan D. Parr,

Chief, Light Water Reactors, Branch No. 3, Division of Project Management.

[FR Doc. 80-3 Filed 1-2-80; 8:45 am]

BILLING CODE 7590-01-M

* Salt River Project Agricultural Improvement and Power District, Southern California Edison Company, El Paso Electric Company, Public Service Company of New Mexico.

NATIONAL TRANSPORTATION SAFETY BOARD

[N-AR 80-2]

Safety Recommendation Letters and Responses; Availability

Aviation Safety Recommendations

The National Transportation Safety Board on December 28 issued three "Class I, Urgent Action" safety recommendations to the Federal Aviation Administration.

A-79-106 and 107.—Citing two near inflight collisions the preceding month involving airliners and private aircraft, the Safety Board called for emergency Federal action to tighten air traffic control (ATC) in the San Diego, Calif., Terminal Radar Service Area (TRSA) and urged FAA to require ATC clearance of all flights into that area. The Board said it believes serious danger continues to exist for a catastrophic aircraft collision in the San Diego area, and that preventive action must be taken immediately.

On November 9 a Western Airlines B-727 and a Funbirds Flying Club Rockwell Commander AC-112B nearly collided on airway V-66 about 9 miles northeast of Lindbergh Airport in San Diego at 4,500 feet m.s.l. The location is within the designated San Diego TRSA. The Western Jet was under control of San Diego Approach Control on a full instrument approach to Lindbergh Airport, and the Commander was on a VFR night cross-country flight eastbound to Imperial, Calif. The Commander pilot had just departed Montgomery Airport and was not in contact with San Diego Approach Control, although the pilot was aware that he was flying through airspace where positive separation from other aircraft was available if he chose to ask for that service.

On November 18 another midair near-collision occurred on the same airway about 1¼ miles west of the San Diego sports stadium. A Pacific Southwest Airlines (PSA) B-727 was being radar vectored for an approach to Lindbergh Airport by San Diego Approach Control. The approach controller issued a "conflicting traffic" advisory to the PSA flightcrew, which identified the traffic as being "right below use." The approach controller did not know about the conflicting traffic until a few seconds before the two aircraft passed each other. The aircraft was a Piper Twin Commanche PA-30, which had taken off from Montgomery Airport on a VFR flight en route to Imperial. This aircraft had attempted to contact San Diego Approach Control about 1 minute before the PSA jet passed near it, but the pilot had not been radar-identified until moments before the near-collision, which took place at an altitude of about 6,200 feet m.s.l. The PSA captain said that if the controller had not issued the conflicting traffic advisory, his aircraft would have collided with the Piper. This midair near-collision also occurred within the San Diego TRSA. In neither case was the small aircraft equipped with a Mode-C altitude encoding transponder.

While recognizing that FAA's recent notice of proposed rulemaking, 79-AWE-17, will in all likelihood ultimately result in establishment of a Terminal Control Area in San Diego, the Safety Board believes that this action does not satisfy the immediate need for segregating controlled, high-performance aircraft and uncontrolled aircraft in the high-density San Diego area, which includes several Airport Traffic Areas in proximity to one another. The busiest of these facilities, Montgomery Airport, lies directly below the arrival flightpath of commercial aircraft approaching San Diego's Air Carrier Terminal, Lindbergh Field. Airway V-66 runs directly through the center of the San Diego terminal area, and is a heavily used eastbound route for aircraft departing airports in the San Diego area. Accordingly, the Safety Board recommends that FAA:

> Immediately exercise its emergency authority and impose mandatory requirements that all pilots communicate with San Diego approach control and receive an appropriate ATC clearance, on a first-come, first-served basis, before entering the San Diego Terminal Radar Service Area. This should be identified as an interim action until a Terminal Control Area is implemented. (A-79-106)

Expedite the establishment and implementation of a Group II TCA at San Diego, with the special requirement that aircraft utilizing the airspace be equipped with an operating Mode-C Altitude Encoding Transponder. (A-79-107)

A-79-108.—In a second safety recommendation letter directed to FAA on December 28, the Safety Board stated that it has sent an accredited representative to assist the United Kingdom Accident Investigation Branch and coordinate the U.S. efforts in the investigation of the accident involving Pan American flight 162, a Boeing 747, at the Heathrow Airport, London, on December 27, 1979.

Preliminary evidence indicates that the aircraft touched down firmly while landing in a gusty crosswind condition. Shortly afterwards the forward part of the righthand outboard engine was observed to drop, leaving the engine attached at the rear, and a fire developed. The fire was quickly extinguished and the crew escaped without injury.

The partial engine separation occurred in the pylon structure at the front engine mount bulkhead (pylon sytation 128). Although the cause for this separation has not been determined, the personnel participating in the investigation are concerned that a condition such as loose or missing fasterners or structrual fatigue damage may have preexisted and contributed to overload failure.

The Safety Board is aware that the U. K. Civil Aviation Authority has urged the FAA to require an inspection of the pylon structure in the area of the forward engine attachment point on the U.S. Boeing 747 fleet. The Safety Board believes that becasue of the potential catastrophic effects of an engine separation, FAA should take expeditious action in accord with the CAA's recommendation. Therefore, the Board recommends that FAA:

Issue a telegraphic Airworthiness directive to require a onetime inspection of the engine pylon structure in the area of pylon station 128 for loose or missing fasteners and fatigue damage for B-747 aircraft equipped with P&W JT9D engines. (A-79-108)

Responses to Safety Recommendations

Aviation

A-79-79.—The Federal Aviation Administration on December 27 responded to a recommendation issued last September 28 during investigation of the incident which occurred near Chicago's O'Hare Airport on September 18, 1979, involving an American Airlines Boeing 707-323C Cargo Jet N7566A. The recommendation asked FAA to issue an Airworthiness Directive to require a nondestructive inspection of 707-300/-300C/-400 models flap track lower support fittings and replacement if required. (See 44 FR 55819, October 11, 1979.)

FAA reports that the Boeing Aircraft Company, American Airlines, and FAA have studied the facts and circumstances of this incident, which occurred as the aircraft was approaching O'Hare when the left inboard trailing edge flap separated from the aircraft at 190 knots and 9,500 feet above ground level. Load factors have been analyzed, fittings have been static tested to verify strength capability, and the incident aircraft has been flight checked at O'Hare to verify the accuracy of its airspeed readouts, matching them with readouts from the Automated Radar Terminal System at that location. FAA notes that Boeing issued Structural Interim Advisories on May 30, 1978, apprising operators of instances wherein some cracks in flap track lower support fittings had been found during routine inspections. Operators responded to Boeing with the results of inspections they conducted. Boeing has recently issued Service Bulletin No. 3373, which calls for inspections of fittings and describes appropriate repair procedures.

Based upon review of the service history, and evaluation of FAA's Service Difficulty Report data, which indicates a downward trend, FAA says it feels that an Airworthiness Directive is not warranted at this time. FAA will probably issue a Maintenance Alert Bulletin, together with the Service Bulletin, thereby bringing attention to the problem through its maintenance inspectors. FAA will determine final actions after evaluating the Boeing Service Bulletin.

Highway

H-76-11, H-77-4, H-77-12 and 13.—On December 4 the Federal Highway Administration advised the Safety Board of research and development activities concerning traffic and bridge barriers as related to these recommendations.

Recommendation H-76-11 was developed as a result of investigation of the automobile collision with and collapse of the Yadkin River Bridge near Siloam, N.C., February 23, 1975, and called on FHWA to develop and publish as part of its research program guidelines for the structural retrofit of bridge railings on existing bridge structures to protect vital structural members from impact by vehicles. FHWA now reports that a study of high performance bridge railing, designed for retrofit on through truss bridges, will be completed in 1980. The study, "Retrofit Railings for Narrow Through Trusses," will include crash testing with vehicles ranging from subcompact to schoolbus. A transition section to protect the end post of a truss will also be tested. FHWA states that these studies represent a significant effort by FHWA to advance the state-of-the-art in traffic barriers. FHWA expects to take positive action to improve barrier design and construction when the results of the studies are analyzed.

Recommendation H-77-4, issued following investigation of the tractor semitrailer collision with bridge column which resulted in a sudden dispersal of anhydrous ammonia at Houston, Texas, May 11, 1976, asked FHWA to expedite past recommendations of the Safety Board regarding the adoption of standards for bridge barrier systems that require new installations to comply with performance standards. FHWA reports on two studies underway with direct application to this recommendation. "New Concepts for Traffic Barrier Systems" has as its objective the development of new system or modification of existing systems for the containment and redirection of both heavy and light vehicles. "Development of Safer Bridge Railing Designs" will develop preliminary performance standards for full-scale testing and design loadings similar to the current specification of the American Association of State Highway and Transportation Officials, which would be used in design procedures and maximum lateral acceleration for various vehicles obtained from impacts with a flat-faced instrumented wall. FHWA also has a contract study with the State of Texas Department of Highways, "Bridge Railings to Contain Heavy Trucks and Buses."

Recommendations H-77-12 and 13 were issued following investigation of the penetration of bridge rail and overturn by schoolbus type vehicle, at Martinez, Calif., May 21, 1976. Recommendation H-77-12 asked FHWA to develop bridge railing designs that will meet performance standards to be established by FHWA for various classes of vehicles and that will be sufficient in number to meet the various State requirements with regard to climatic and other physical conditions that affect the operation and maintenance of a roadway system; such bridge barrier railing designs should be available to States that do not desire to develop their own designs in accordance with mandatory performance standards issued by FHWA. FHWA combined its comments on this recommendation with

its comments on recommendation H-77-4, above.

With respect to recommendation H-77-13, FHWA reorts two studies nearing completion. The recommendation asked FHWA to investigate through dynamic crashtesting and analytical procedures the effects of various geometric configurations and adjacent roadway surfaces on the performance of traffic barrier rail systems, the investigation also to consider how maintenance practices or the lack of maintenance affects the performance of the barrier rail system. FHWA notes that the study, "Analysis of the Performance of Protective Systems on Nonlevel Terrain" tested w-beam and cable guardrail, and a presentation of the crash test films and the findings can be made for the Board or staff. "Bridge Rail Retrofit for Curved Structures" will use a special test installation of a curved offramp. The parapet designs will include two New Jersey types, one vertical and one perpendicular to the superelevated highway. A tubular thrie beam mounted on a collapsing ring will also be tested. Each railing will be tested with a Vega sedan and a schoolbus.

H-79-14 through 17.—Letter of December 6 from the National Highway Traffic Safety Administration is in response to the Safety Board's comments of August 28 on NHTSA's initial response of last July 18 concerning recommendations developed as a result of the Board's special study on the safety of multipurpose vans. (See 44 FR 43004, August 16, 1979.)

The Safety Board's August 28 letter indicated that recommendation H-79-14 will be held in open status until final action has been taken on each of the rule changes recommended. The recommendation called on NHTSA to (1) study the failures of custom highback bucket seats and anchorage systems to determine if they pose a significant injury or safety problem; (2) study failures of custom steering wheels which do not meet Federal Motor Vehicle Safety Standard (FMVSS) No. 203 to determine whether they pose a significant injury or safety problem; (3) study the extent to which doors jam in collisions to determine if corrective action is needed to prevent ejection and to enhance escape; (4) determine if FMVSS's 203 and 204 (steering wheel and steering column) should be extended to all classes of vans or if new requirements are needed for vans; and (5) determine the feasibility of extending FMVSS 212 to all classes of vans.

The Board expressed appreciation of NHTSA's efforts outlined in response to parts 3, 4, and 5 of recommendation H-79-14 but was concerned about problems surrounding the "render inoperative" situation as it relates to parts 1 and 2 of the recommendation and the installation of custom items on these vehicles. The Board reiterated its opinion previously stated on the important issue of aftermarket installations. The Board believes it is incumbent upon NTSA to provide some guidance as to how a vehicle, specifically multipurpose vans in this instance, can be safely modified by users and others not covered by the "render inoperative" stipulation of the standard. The Board supports NHTSA's proposal to extend coverage of FMVSS 201 (occupant portection against interior impact), 203 (impact protection—steering system), and 204 (steering control—rearward displacement), to light trucks, vans and multipurpose vehicles (MPV's). The Board asked to be apprised of any investigation of the overall effect on occupant safety due to doors jamming during an accident.

NHTSA's proposed extension of passive restraint requirements to light trucks, vans, and MPV's included in NHTSA's rulemaking plan is acceptable to the Board as meeting the intent of H-79-15, which was on August 28 classified as "Closed—Acceptable Action." The Board requested a copy of the final report on NHTSA's research effort for passive restraint development for light trucks and vans.

Concerning recommendation H-79-16, the Board noted that the ability to get out of a vehicle is a need so basic as to be self-evident. The Board's August 28 letter indicates that if NHTSA cannot proceed with rulemaking without an indication that a significant number of lives could be saved by such a requirement, the Board is open to alternative suggestions as a means of implementing H-79-16 that would not include a prolonged data collecting period. H-79-16 will be kept open pending reconsideration of the Board's proposal.

The Board found NHTSA's response to recommendation H-79-17 concerning crash aggressiveness, when viewed along with the program outlined in NHTSA's April 20, 1979, five-year rulemaking plan, to be acceptable, and H-79-17 was classified as "Closed—Acceptable Action."

NHTSA's December 6 letter notes the Board's concern over the possibility of owners not covered by the "rendering inoperative" provision adversely modifying vehicles with respect to their safety features. While NHTSA shares the Board's concern, NHTSA reiterates its intention not to address this problem at the present time.

Concerning the Board's interest in obtaining more data on the safety effect of door jamming, NHTSA notes that door jamming potentially increases the severity of injury in entrapment cases which involve fire or water immersion but, for cases where there is the possibility of hazardous ejection, door jamming helps prevent ejection. A review of NHTSA's accident data indicates that injuries resulting from a combination of door jamming and fire are rare, but these data also indicate that the ejection route for many victims is through an open door; these victims might not have been ejected if the doors had jammed. The propensity for door jamming has been a part of NHTSA's crash test evaluations, the results showing that at least one front door in about 75 percent of the current production cars tested could be manually opened after testing. These tests were both frontal and rear impacts at 35 mph. NHTSA says that the research safety vehicle program has also demonstrated that doors can be opened after tests at higher speeds. Both test results and accident data suggest door jamming is a factor in accidents but do not provide NHTSA with a quantitative description of the effects. In programs such as the upgrade of side impact protection, NHTSA plans to explore opportunities to remedy door jamming problems and has therefore decided against initiating a specific door jamming program.

In response to the Board's discussion of recommendation H-79-16 and the inquiry as to means other than rulemaking with attendant data collection requirements, for requiring interior handles on rear doors, NHTSA says it is not aware of any other objective means for instituting such changes in vehicle design. In this particular case, for example, NHTSA said it would be important to know that the provision of such door handles would not increase the ejection potential for occupants, particularly children.

Marine

M-79-59 through 66.—The U.S. Coast Guard on December 13 responded to recommendations issued following investigation of the collision of the M/V ANCO SCEPTRE with the tanker POST CHARGER near Crown Point bend in the Houston Ship Channel, February 9, 1976. (See 44 FR 36272, June 21, 1979.) Coast Guard concurs with all eight recommendations.

In response to recommendation M-79-59, which asked Coast Guard to institute mandatory participation in the vessel Traffic Service (VTS), Coast Guard reports that a draft notice of proposed

rulemaking, No. CGD 74–29, establishing VTS Houston-Galveston as a mandatory system will be issued in the near future. Also, with reference to M–79–60, which recommended that Crown Point bend be designated as a VTS precautionary area and vessels passing at the bend be restricted, Coast Guard reports that in the same draft proposal Crown Point bend is being designated as a VTS Limited Traffic Area. Coast Guard notes that a Limited Traffic Area is defined as being more restrictive than a Precautionary Area.

Recommendation M–79–61 asked Coast Guard to develop vessel maneuvering guidelines for VTS and pilot use on the Houston Ship Channel concerning vessel size, draft, and speed, in relation to channel width, depth, and configuration. Coast Guard reports that the Commander, Eighth Coast Guard District, will evaluate the feasibility of developing vessel maneuvering guidelines for use on the Houston Ship Channel. Vessel operators, pilots, and other users will be consulted and appropriate recommendations will be forwarded for evaluation. Further response to the Safety Board will be made prior to May 1, 1980.

With reference to M–69–62, Coast Guard says it will initiate action with the National Oceanic and Atmospheric Administration to survey currents in the Houston Ship Channel and make the information available to the users of the channel, as recommended. In response to M–79–63, Coast Guard will recommend to the U.S. Army Corps of Engineers that pertinent Houston Ship Channel silting information be made available to users of the channel, as recommended.

Recommendation M–79–64 asked Coast Guard to develop with U.S. Department of Commerce, Maritime Administraton (MARAD), and pilots' associations a program to indoctrinate ships' officers and pilots about the capabilities and use of VTS to improve safety on U.S. waterways. Coast Guard notes that MARAD is mandated by law to provide training programs which are considered necessary for the training of U.S. Merchant Marine personnel and is provided with funds and staffed for this purpose. Coast Guard is not equipped to provide this training, but does routinely publish operating manuals for all active VTS systems. These manuals are intended to provide the VTS user with the information necessary for participation in the system. Coast Guard offers to assist and advise MARAD in developing such a program.

Recommendation M–79–65 called on Coast Guard to publicize information concerning waterway loading facility design to eliminate or minimize damage to facilities susceptible to damage from vessel collision and incorporate appropriate precautions in regulations about the design of designated waterfront facilities. In response, Coast Guard notes that its advance notice of proposed rulemaking on waterfront facilities, published April 10, 1978, under docket CGD–128, contains general requirements for the construction of piers and wharves. This notice incorporates by reference the National Fire Protection Associaton Standard for the construction of piers and wharves, NFPA No. 87. The intent of these regulations is to require facility owners to incorporate into the design of new facilities, construction techniques and materials that will afford resistance to impact and abrasion by vessels, floating ice or debris, and substantially eliminate damage from ordinary operations. Coast Guard considers that when published as a final rule, these proposals are considered adequate to meet the intent of recommendation M–79–65.

Recommendation M–79–66 asked Coast Guard to survey terminal facilities along the Houston Ship Channel to determine the extent of damage that has been caused by vessel speeds and maneuvering accidents and to institute necessary VTS controls to eliminate speed/maneuvering problems. In response, Coast Guard states that information regarding damages to terminal facilities along the Houston Ship Channel caused by vessel speed and maneuvering accidents will be obtained, and this information will be used to determine the need for and type of controls which may be appropriate. Coast Guard will make a followup response to this recommendation before November 1, 1980.

Railroad

R–79–10 and 11.—Letter of December 13 from the Federal Railroad Administration is in response to the Safety Board's comments of November 7 concerning FRA's initial response to these recommendations, dated September 12, 1979. (See 44 FR 55676, September 27, 1979.) The recommendations were developed as a result of investigation of the head-on collision at Florence, Ala., of a Louisville & Nashville freight train and an L&N yard train, September 18, 1978.

The Safety Board's November 7 letter indicates that FRA's actions with respect to R–79–10 satisfy the intent of the recommendation and, accordingly, R–79–10 is classified as "Closed—Acceptable Action."

With respect to R–79–11, which asked FRA to expedite action on its study of locomotive operator compartment design to minimize crash damage and promulgate appropriate regulations, the Safety Board's November 7 letter expressed concern with the time frame required to translate test evaluations into crashworthiness design improvements. Until acceptable design standards are developed and their use made mandatory, the Board believes that crewmembers in locomotive cabs will be exposed to unnecessary and unacceptable risks of injury. Also, the Board did not concur with FRA's belief that the crashworthiness issue may be resolved without additional regulations. American railroads presently operate about 27,500 locomotives, and the Board believes that some carriers, as a matter of economics, will forego locomotive cab improvements unless the improvements are made mandatory through regulatory action. Thus, the Safety Board urged FRA to place crashworthiness test results, such as interior improvements, anticlimbers, and collision posts, into regulatory form and amend the regulations as other appropriate findings are developed. R–79–11 was classified as "Open—Unacceptable Action."

In its December 13 response, FRA argues that such a piecemeal approach in adopting regulations on crashworthiness, utilizing available data and modifying those rules as additional data becomes available, is not appropriate. FRA states that the design characteristics of locomotives are fairly complex, and attempts to modify one aspect of the design to accomplish a particular goal are likely to prove expensive and may prove to be counterproductive in terms of overall safety. FRA further states, "It was for this very reason that the FRA developed a large scale/multifaceted research effort so that all of the necessary aspects of the design problems would have been considered and would be available if regulatory action is deemed appropriate."

FRA provides the following breakdown of the major phases and estimated time frames for completion of the FRA Locomotive Control Compartment Crashworthiness Study:

1. Review data relative to override control and conduct engineering and cost-benefit analysis: Second Quarter CY 1980.
2. Establish performance guidelines, conduct structural evaluation of the locomotive cab, and develop test plan design and vehicle models for new and existing locomotives: Third Quarter CY 1980.
3. Develop cab crashworthiness and improvement with override solutions: First Quarter CY 1981.
4. Conduct tests: Third Quarter CY 1981.
5. Analyze data: First Quarter CY 1982.

6. Develop final performance specifications and prepare final report: Fourth Quarter CY 1982.

Due to the complexity of developing performance requirements for the large number of locomotive types in service, FRA believes that the time frame for the project cannot be compressed. Upon completion of the study, FRA will evaluate the results and determine the need for promulgation of Federal regulations.

Note.—Copies of Safety Board recommendation letters, responses and related correspondence are available free of charge. All requests for copies must be in writing, identified by recommendation number. Address inquiries to: Public Inquiries Section, National Transportation Safety Board, Washington, D.C.

(49 U.S.C. 1903(a)(2), 1906)

Margaret L. Fisher,

Federal Register Liaison Officer.

January 4, 1980.

[FR Doc. 80-745 Filed 1-9-80; 8:45 am]

BILLING CODE 4910-58-M

OFFICE OF MANAGEMENT AND BUDGET

Agency Forms Under Review

January 7, 1980.

Background

When executive departments and agencies propose public use forms, reporting, or recordkeeping requirements, the Office of Management and Budget (OMB) reviews and acts on those requirements under the Federal Reports Act (44 USC, Chapter 35). Departments and agencies use a number of techniques including public hearings to consult with the public on significant reporting requirements before seeking OMB approval. OMB in carrying out its responsibility under the Act also considers comments on the forms and recordkeeping requirements that will affect the public.

List of Forms Under Review

Every Monday and Thursday OMB publishes a list of the agency forms received for review since the last list was published. The list has all the entries for one agency together and grouped into new forms, revisions, extensions, or reinstatements. Some forms listed as revisions may only have a change in the number of respondents or a reestimate of the time needed to fill them out rather than any change to the content of the form. The agency clearance officer can tell you the nature of any particular revision you are interested in. Each entry contains the following information:

The name and telephone number of the agency clearance officer (from whom a copy of the form and supporting documents is available);

The office of the agency issuing this form;

The title of the form;

The agency form number, if applicable;

How often the form must be filled out;

Who will be required or asked to report;

An estimate of the number of forms that will be filled out;

An estimate of the total number of hours needed to fill out the form; and

The name and telephone number of the person or office responsible for OMB review.

Reporting or recordkeeping requirements that appear to raise no significant issues are approved promptly. Our usual practice is not to take any action on proposed reporting requirements until at least ten working days after notice in the **Federal Register** but occasionally the public interest requires more rapid action.

Comments and Questions

Copies of the proposed forms and supporting documents may be obtained from the agency clearance officer whose name and telephone number appear under the agency name. The agency clearance officer will send you a copy of the proposed form, the request for clearance (SF83), supporting statement, instructions, transmittal letters, and other documents that are submitted to OMB for review. If you experience difficulty in obtaining the information you need in reasonable time, please advise the OMB reviewer to whom the report is assigned. Comments and questions about the items on this list should be directed to the OMB reviewer or office listed at the end of each entry.

If you anticipate commenting on a form but find that time to prepare will prevent you from submitting comments promptly, you should advise the reviewer of your intent as early as possible.

The timing and format of this notice have been changed to make the publication of the notice predictable and to give a clearer explanation of this process to the public. If you have comments and suggestions for further improvements to this notice, please send them to Stanley E. Morris, Deputy Associate Director for Regulatory Policy and Reports Management, Office of Management and Budget, 726 Jackson Place, Northwest, Washington, D.C. 20503

DEPARTMENT OF AGRICULTURE

Agency Clearance Officer—Richard J. Schrimper—447-6201

New Forms

Forest Service.
Youth Conservation Corps long-term benefits evaluation.
Other (see SF-83).
YCC applicants and parents of YCC applicants, 3,400 responses; 1,700 hours.
Charles A. Ellett, 395-5080.

Revisions

Agricultural Marketing Service.
Science and Education Administration.
Animal health and disease data bank questionnaire.
Single time.
Agencies maintaining animal health/disease bata bank, 900 responses; 475 hours.
Charles A. Ellett, 395-5080.
Regulations and related reporting and recordkeeping requirements under the P&S Act.
On occasion.
Meat packers, market agencies and dealers (livestock), 32,091 responses; 18,913 hours.
Charles A. Ellett, 395-5080.
Economics, Statistics, and Cooperatives Service.
Annual mink survey.
Annually.
Mink process, 1,083 responses; 181 hours.
Office of Federal Statistical Policy and Standard, 673-7974.
Economics, Statistics, and Cooperatives Service.
Ground data collection in support of agristars.
Other (see SF-83).
Farmers on pre-selected fields, 17,550 responses; 8,470 hours.
Charles A. Ellett, 395-5080.

DEPARTMENT OF HEALTH, EDUCATION, AND WELFARE

Agency Clearance Officer—William Riley—245-6511

Reinstatements

Health Care Financing Administration (Medicare).
Nationwide survey of independent prepaid and self-insured health plans.
HCFA-1807, HCFA-I-1807, HCFA-I-1807A.
On occasion.
Independent and prepaid self-insured health plans, 200 responses; 100 hours.
Richard Eisinger, 395-3214.
Health Care Financing Administration (Medicare).
Demonstration project for calculating adjusted average per capita costs for HMC's.

HCFA-123-T, 123-I.
On occasion.
Nursing, rest and convalescent homes and long-term hospital (23 counties and 6 States), 350 responses; 117 hours.
Richard Eisinger, 395-3214.

DEPARTMENT OF THE INTERIOR

Agency Clearance Officer—William L. Carpenter—343-6716

Reinstatements

Bureau of Land Management.
Range improvement application and permit 4115-20.
On occasion.
Applicants—permit for range improvements, 3,000 responses; 750 hours.
Charles A. Ellett, 395-5080.

TENNESSEE VALLEY AUTHORITY

Agency Clearance Officer—Eugene E. Mynatt—854-2596

New forms

Solar home load research worksheet TVA 6280.
Single time.
Residential customers participating in solar test, 400 responses; 200 hours.
Charles A. Ellett, 395-5080.

Customer response form for load management studies TVA 6224.
On occasion.
Consumers of TVA power, 3,000 responses; 1,500 hours.
Charles A. Ellett, 395-5080.

Stanley E. Morris,
Deputy Associate Director for Regulatory Policy and Reports Management.

[FR Doc. 80-846 Filed 1-9-80; 8:45 am]
BILLING CODE 3110-01-M

PRESIDENTIAL COMMISSION ON WORLD HUNGER

Meeting

The tenth meeting of the Presidential Commission on World Hunger will be held on Friday, January 18, 1980, in Room 2010 of the New Executive Office Building, 726 Jackson Place, N.W., Washington, D.C. The meeting will begin at 9:30 a.m. and conclude at approximately 4:30 p.m.

The agenda for the meeting will include discussion of draft portions of the Commission's Report.

The meeting will be open to observation by the public to the extent space is available. Reservations are required and requests should be addressed to the Presidential Commission on World Hunger, 734 Jackson Place, N.W., Washington, D.C. 20006. Reservations will be honored on the basis of the earliest postmarks of requests.

Donald B. Harper,
Administrative Officer, Presidential Commission on World Hunger.

[FR Doc. 80-755 Filed 1-9-80; 8:45 am]
BILLING CODE 6820-97-M

SECURITIES AND EXCHANGE COMMISSION

[Files Nos. 4-196, 4-273, 4-274, and 4-267; Release No. 16462]

Boston Stock Exchange, Inc.; Order Granting Temporary Approval

January 2, 1980.

In the matter of Boston Stock Exchange, Inc., 53 State Street, Boston, Massachusetts 02109; Cincinnati Stock Exchange, Inc., 209 Dixie Terminal Building, Cincinnati, Ohio 45202; Midwest Stock Exchange, Inc., 120 South LaSalle Street, Chicago, Illinois 60604; Pacific Stock Exchange, Inc., 618 South Spring Street, Los Angeles, California 90014; National Association of Securities Dealers, Inc., 1735 K Street, NW., Washington, D.C. 20006. Plans filed pursuant to 17 CFR 240.17d-2.

By this Order, issued pursuant to Sections 17(d)(1) and 11A(a)(3)(B) of the Securities Exchange Act of 1934 (the "Act") (15 U.S.C. 78q(d)(1) and 78k-1(a)(3)(B)), the Securities and Exchange Commission (the "Commission") is hereby approving for a period of ninety-five (95) days the plans for allocating regulatory responsibilities (the "allocation plans") filed pursuant to 17 CFR 240.17d-2 ("§ 240.17d-2") by the National Association of Securities Dealers, Inc. ("NASD") in conjunction with the Boston Stock Exchange, Inc. ("BSE"), Cincinnati Stock Exchange, Inc. ("CSE"), Midwest Stock Exchange, Inc. ("MSE"), and Pacific Stock Exchange, Inc. ("PSE") (with the NASD, the "parties"). The period of approval will thus expire on April 5, 1980. The responsibilities of the parties to the plans during this period of temporary approval shall be controlled by the terms of the Commission's September 26, 1978 order, Securities Exchange Act Release No. 15191 (the "September order"), provisionally approving the plans until June 23, 1979. The approval period was subsequently extended by Securities Exchange Act Release No. 15491 (June 21, 1979) until January 1, 1980.

The September order conditioned further Commission consideration of the plans upon the filing of specified amendments to the plans and of certain supplementary materials which were necessary in order to identify with precision the responsibilities of the parties under the plans and to facilitate evaluation of the adequacy of the regulatory programs of the parties. A number of these required submissions have not yet been completed. Extension of the approval period will permit the parties to execute the remaining amendments and to prepare the supplementary material.

The Commission will not consider approving these allocation plans without conditions until such time as they articulate accurately and completely the agreements reached by the parties and until such time as the supplementary materials identify with precision both the examination and enforcement responsibilities of the parties.

During the period of provisional approval, the Commission will continue its on-going review of the performance of the parties under the plans. It may consider alternative allocations of responsibilities to those proposed, including termination of the approval period, if the parties' progress in concluding this phase of the program to reduce unnecessary regulatory duplication is not completed within an appropriate time frame. In addition, the Commission may at any time consider alternative allocations if its review of the regulatory capabilities and procedures and staffing of the parties, or other germane factors which the Commission may consider under Section 17(d) of the Act, indicates that the parties are unable to fulfill their responsibilities under the act or the allocations plan or if the allocation of responsibilities in the plans becomes inconsistent with the Act.

It is therefore ordered, Pursuant to Sections 17(d) and 11A(a)(3)(B) of the Act (15 U.S.C. 78q(d) and 78k-1(a)(3)(B)) that, for a period ending April 5, 1980, unless such period is otherwise extended by the Commission, the plans between the NASD and BSE, the NASD and CSE, the NASD and MSE, and the NASD and PSE filed pursuant to Section 240.17d-2 are approved subject to the terms and conditions set forth in this Order and the Commission's September Order.

It is further ordered, That the BSE, CSE, MSE, and PSE are relieved of those responsibilities allocated to the NASD by such plans as approved subject to the terms and conditions set forth in the above Commission Orders.

For the Commission, by the Division of Market Regulation, pursuant to delegated authority.

George A. Fitzsimmons,

Secretary.

[FR Doc. 80-818 Filed 1-9-80; 8:45 am]

BILLING CODE 8010-01-M

[Release No. 34-16466; Jan. 3, 1980/File No. SR-CBOE-79-9, Amdt. No. 1]

Chicago Board Options Exchange, Inc.; Self-Regulatory Organizations; Proposed Rule Change

Proposed Rule Change By: Chicago Board Options Exchange, Incorporated, Relating to: Responses to the Recommendations of the Special Study of the Options Markets as promulgated by the Securities and Exchange Commission in Release No. 34-15575, Comments requested on or before January 31, 1980.

Pursuant to Section 19(b)(1) of the Securities Exchange Act of 1934, 15 U.S.C. 78s(b)(1), notice is hereby given that on December 19, 1979, the Chicago Board Options Exchange Incorporated ("CBOE") filed with the Securities and Exchange Commission amendments to proposed rule changes as described in Items I, II and III below, which have been prepared by the self-regulatory organization. The Commission is publishing this notice to solicit comments on the proposed rule changes from interested persons.

I. Self-Regulatory Organization's Statement of Terms of Substance of the Proposed Rule Changes

The following is a summary of the rule changes proposed by CBOE. In certain instances, proposed revisions relate to amendments previously filed by CBOE (SR-CBOE-79-9). In other instances, revisions to existing rules are proposed in this filing for the first time. The text of the proposed rule changes is attached as Exhibit A to this notice. Where applicable, brackets and italics indicate changes from the rules as set forth in the previous filing.

Rule 9.7. Proposed Interpretation .01(d) has been amended to require customer account records to indicate whether the accounts have been approved for discretionary trading.

Rule 9.12. The Rule is proposed to be amended to require customer account statements to disclose any special account charges that are not itemized and disclosed on confirmations. The proposed revision would also require disclosure on margin account statements sent to options customers of the mark-to-market and market value of each security position in the account, the outstanding balance in the account and account equity. Under the proposed rule, these statements must also contain a legend indicating that further information concerning options commissions and similar execution charges will be provided on request. A new Interpretation .01 is proposed which would prescribe the manner of calculating margin account equity.

Rule 9.23. A new subsection (b) is proposed to be added to the Rule to require members to send to a central complaint registry all options-related complaints pertaining to the member or its associated persons. The rule contemplates that the registry will be maintained by the NASD and will also include options-related complaints received by the self-regulatory organization and the SEC.

Rule 9.8. This Rule is proposed to be amended to require members to develop and implement a written program under the supervision of the Senior ROP for review of customer accounts and options orders in such accounts. Interpretation .03 of the Rule is proposed to be amended to require each member firm to maintain, at the principal supervisory office having jurisdiction over the office servicing the customer's account, sufficient information to permit a timely review of each customer's options account to determine that options transactions are compatible with customer objectives and the terms of the account's approval, the size and frequency of options transactions, commission activity in the account, profit or loss in the account, undue concentration in any options class or classes, and compliance with FRB Regulation T.

Rule 9.21. This Rule is proposed to be amended to clarify that standards governing communications to customers apply to persons associated with members as well as to the members themselves. The amendment also clarifies that these standards apply to communications to a single individual as well as to the general public. Interpretation .01 is proposed to be amended to require prescribed disclosures in advertising and sales literature and to establish specific guidelines for other written communications. Interpretation .03 is proposed to be amended to provide that sales literature must state that supporting documentation will be supplied on request. Subparagraph C of Interpretation .03 is proposed to be revised to permit balanced representations regarding past performance that pertain to the firm as a whole. The use of summaries or averaged past performance records is proposed to be permitted without the disclosure of detailed supporting data if certain basic information is disclosed along with an offer to provide complete documentation. Finally, subparagraph F of Interpretation .03 is proposed to be revised to prohibit the use of nonstandard worksheets for a particular options strategy where a standard worksheet has been adopted.

Educational Circular on Front-Running. This circular is proposed to be revised to delete the examples previously provided.

II. Self-Regulatory Organization's Statements of Purpose and Statutory Basis of Proposed Rule Change

In its filing with the Commission, CBOE included the following statements concerning the purpose and basis of the proposed rule changes and discussed comments it received on the proposed rule change. Such statements are reproduced in sections (A), (B) and (C) below.

(A) Self-Regulatory Organization's Statement of Purpose of and Statutory Basis for Proposed Rule Changes. This amendment to the original filing (SR-CBOE-79-9) is for the purpose of proposing rules amendments in response to certain recommendations of the Special Study of the Options Markets that were not addressed in the original filing, as well as proposing certain editorial and minor substantive amendments to previously filed proposals.

The statutory basis for all of these proposed rule changes remains as stated in the original filing. The purpose of each of the substantive proposed rule changes included in this filing is as follows:

Rule 9.7. The minimum information that must be reflected in customers account records has been expanded to include whether the account is approved for discretionary orders.

Rule 9.12. In response to Options Study Recommendation I.A.2.a., we propose to revise Rule 9.12 to expand the information which member organizations must disclose in the statement sent to customers having a general (margin) account. By limiting this requirement to margin accounts, the information will be furnished to most options customers without imposing undue burdens on member firms. The proposal will require that statements of margin accounts sent to such customers reflect the mark-to-the-market price and market value for all security positions in the account, the total of market value of all positions in the account, the debit (or credit) balance, and account equity. We

have defined general (margin) account equity in proposed Interpretation .01 to Rule 9.12 as the difference between the total of long security values, including any credit balance, and the total of short security values, including any debit balance.

Finally, we propose to require a legend on account statements to the effect that information concerning commissions and other charges has been included in confirmations, and will be furnished to customers upon request.

Rule 9.23. In response to Options Study recommendation I.A.2.g. for the self-regulatory organizations to establish and maintain a central customer complaint file showing all complaints received by each SRO and the disposition thereof, we propose adding a new subsection (b) to Rule 9.23 that would require each member firm to forward a copy of every options-related complaint pertaining to the member firm and its associated persons, and a report of any action taken in response thereto, to the National Association of Securities Dealers, Inc., the designated joint self-regulatory organization complaint registry. The rule describes the complaint registry as containing all such complaints as well as options-related complaints received by the Exchange and other self-regulatory organizations and the SEC.

Rule 9.8. Options Study recommendation I.A.2.e. calls for the adoption of rules requiring that the headquarters office of every options broker-dealer be in a position to timely review each customer's account to determine the extent of commissions and realized and unrealized losses relative to account equity, the existence of unusual credit extensions and unusual account risks or trading patterns.

In response, Rule 9.8 is proposed to be revised to impose in explicit terms the obligation for firms to develop and implement headquarters account review procedures, and to impose record-keeping requirements to facilitate such review. Recognizing the decentralized supervisory structure which many large securities firms have adopted, the proposed amendment is keyed to review by the "principal supervisory office having jurisdiction over the office supervising the customer's account."

Rule 9.21. The proposed rule amendments as previously filed regarding customer communications have been modified in certain respects. First, the general rule regarding customer communications in paragraph (a) of the Rule has been clarified to cover communications by persons associated with member organizations and to apply to communications with an individual customer or member of the public. Also, the applicability of the various standards of the rule to different categories of communications (advertising, sales literature and other communications) has been further clarified. The circumstances and conditions under which past performance information may be used have also been clarified to emphasize that representations concerning past performance must be made in a balanced manner and must pertain to the member organization as a whole. Representations concerning the past performance of a particular registered representative are, thus, prohibited. We have also added specified requirements concerning the furnishing of supporting detail whenever statements involving past performance are made. Finally, a new requirement has been added to Interpretation .02 to Rule 9.21 barring the use of non-standard options worksheets where a member organization has adopted a standard form of worksheet for a particular options strategy.

(B) Self-Regulatory Organization's Statement on Burden on Competition. CBOE does not believe that the rule changes proposed in this Amendment No. 1 to File No. SR–CBOE–79–9 will impose any burdens on competition.

(C) Self-Regulatory Organizations's Statement on Comments Received from Members, Participants, or Others on Proposed Rule Changes. Comments on rule changes previously proposed were summaried in CBOE's prior filing SR–CBOE–79–9. Editorial revisions to those proposed reflected herein were not submitted to members for comments. Comments on proposed rule changes presented herein for the first time were solicited in response to a preliminary draft of the proposals that was mailed to member firms. A large number of detailed comments were received in response to this mailing. The following is a summary of those comments that are relevant to the proposed rule changes in their present form.

Rule 9.12. The proposals involving changes in customer account statements generated by far the greatest volume of member comment. However, most of the comments were directed toward the items which are not included in the proposal as filed (e.g., disclosure regarding total commissions and aggregate account profit or loss). Most commentators opposed including information on the account statement that is already stated on confirmations. Members also criticized the mark-to-the-market requirement on the grounds that current prices may be unavailable in certain instances and, in any event, will be out of date by the time the statement is received. Small-and medium-sized firms criticized the cost involved with putting the proposed account statement requirements into effect.

Rule 9.23. The requirement of a joint SRO compliant registry received widespread support from commentators. Several members commented that the standards governing the type of complaints which must be forwarded to the registry should be stated so that no doubt can exist. One Commentator also indicated that members should be allowed access to registry compliant files.

Rule 9.8. The requirement that each principal supervisory office be in a position to make certain determinations with respect to options customer's accounts (Interpretation 03) was generally supported in member's comments. Several commentators indicated that the proposed Interpretation is consistent with existing review programs. However, certain commentators criticized the cost of the proposal and sought more detailed standards for the inquiries required by the provision.

III. Date of Effectiveness of Proposed Rule Change and Timing for Commission Action

On or before February 14, 1980, or within such longer period (i) as the Commission may designate up to 90 days of such date if it finds such longer period to be appropriate and publishes its reasons for so finding or (ii) as to which the CBOE consents, the Commission will:

(A) By order approve such proposed rule changes, or

(B) Institute proceedings to determine whether the proposed rule changes should be disapproved.

IV. Solicitation of Comments

Interested persons are invited to submit written data, views and arguments concerning the foregoing. Persons desiring to make written submissions should file 6 copies thereof with the Secretary, Securities and Exchange Commission, 500 North Capitol Street, Washington, D.C. 20549. Copies of the submission, all subsequent amendments, all written statements with respect to the proposed rule changes that are filed with the Commission, and of all written communications relating to the proposed rule change between the Commission and any person, other than those that may be withheld from the public in accordance with the provisions of U.S.C.

522, will be available for inspection and copying in the Commission's Public Reference Section, 1100 L Street, N.W., Washington, D.C. Copies of such filing will also be available for inspection and copying at the principal office of the above-mentioned self-regulatory organization.

All submissions should refer to this file number referenced in the caption above and should be submitted on or before January 31, 1980.

For the Commission, by the Division of Market Regualtion, pursuant to delegated authority.

George A. Fitzsimmons,
Secretary.

January 3, 1980.

Exhibit A

Opening of Accounts

RULE 9.7.

* * * * *

** * * Interpretations and Policies*

.01 In fulfilling its obligations pursuant to paragraph (b) of Rule 9.7 with respect to options customers that are natural persons, a member organization shall seek to obtain the following information at a minimum (information shall be obtained for all participants in a joint account):

* * * * *

In addition, the customer's account records shall contain the following information, if applicable:

* * * * *

d. Nature and types of transactions for which account is approved (e.g., buying, covered writing, uncovered writing, spreading, *discretionary transactions)*

Statements of Accounts to Customers

RULE 9.12. [Except with the permission of the Exchange,] Every member organization shall send to its customers statements of account showing security and money positions [and], entries, *interest charges and any special charges that have been assessed against such account during the period covered by the statement; Provided, however, That such charges need not be specifically delineated on the statement if they are otherwise accounted for on the statement and have been itemized on transaction confirmations. With respect to options customers having a general (margin) account, such statement shall also provide the mark-to-market price and market value of each option position and other security position in the general (margin) account, the total market value of all positions in the account, the outstanding debit or credit balance in the account, and the general (margin) account equity. The statement shall bear a legend stating that further information with respect to commissions and other charges related to the execution of listed option transactions has been included in confirmations of such transactions previously furnished to the customer, and that such information will be made available to the customer promptly upon request.* The statement shall *also* bear a legend requesting the customer to promptly advise the member of any material change in the customer's investment objectives or financial situation. Such statements of account shall be sent at least quarterly to all accounts having a money or a security position during the preceding quarter and at least monthly to all accounts having an entry during the preceding month.

** * * Interpretations and Policies:*

01. For purposes of the foregoing rule, general (margin) account equity shall be computed by subtracting the total of the "short" security values and any debit balance from the total of the "long" security values and any credit balance.

Customer Complaints

RULE 9.23 *(a)* Every member organization conducting a non-member customer business shall make and keep current a separate central log, index or other file for all options-related complaints, through which these complaints can easily be identified and retrieved. The term "options-related complaint" shall mean any written statement by a customer or person acting on behalf of a customer alleging a grievance arising out of or in connection with listed options. The central file shall be located at the principal place of business of the member organization or such other principal office as shall be designated by the member organization. At a minimum, the central file shall include: (i) Identification of complainant, (ii) date complaint was received, (iii) identification of Registered Representative servicing the account, (iv) a general description of the matter complained of, and (v) a record of what action, if any, has been taken by the member organization with respect to the complaint. Each options-related complaint received by a branch office of a member organization shall be forwarded to the office in which the separate, central file is located not later than 30 days after receipt by the branch office. A copy of every options-related complaint shall be maintained at the branch office that is the subject of the complaint.

(b) In addition to maintaining a central file of options-related complaints as required by (a) above, every member organization conducting a non-member customer business shall forward a copy of every options-related complaint pertaining to the member organization or its associated persons, within 30 days after receipt, to the designated custodian of the joint self-regulatory organization options complaint registry, and shall also promptly forward advice of any action taken by the member organization in response to such complaints. The options complaint registry is maintained by the National Association of Securities Dealers, Inc. Copies of complaints should be forwarded to the NASD at 1735 K Street, NW., Washington, D.C. 20006. The options complaint registry is a data bank consisting of a record of options-related complaints received by members of the Exchange and other SROs, and of such complaints received directly by the SROs and the SEC. Information in the options complaint registry will be made available only for bona fide regulatory purposes to national securities exchanges or associations, the SEC or other governmental regulatory agencies.

Supervision of Accounts

RULE 9.8 *(a) Duty to Supervise; Senior Registered Options Principal.* Every member organization shall [designate and specifically identify to the Exchange a] *develop and implement a written program for the review of the organization's non-member customer accounts and all orders in such accounts, insofar as such accounts and orders relate to option contracts. This program shall be under the supervision of a designated* Senior Registered Options Principal *who is specifically identified to the Exchange and* who is an officer (in the case of a corporation) or general partner (in the case of a partnership) of the member organization [who shall supervise all of the organization's non-member customer accounts and all orders in such accounts, insofar as such accounts and orders relate to option contracts].

* * * * *

** * * Interpretations and Policies:*

.01 No change.

.02 No change.

.03 Each member organization shall maintain, at the principal supervisory office having jurisdiction over the office servicing the customer's account, information to permit review of each customer's options account on a timely

basis to determine (i) the compatibility of options transactions with investment objectives and with the types of transactions for which the account was approved; (ii) the size and frequency of options transactions; (iii) commission activity in the account; (iv) profit or loss in the account; (v) undue concentration in any options class or classes, and (vi) compliance with the provisions of Regulation T of the Federal Reserve Board.

Communications to Customers

RULE 9.21. (a) *General Rule.* No member or member organization *or person associated with a member* [,and no partner or employee thereof,] shall utilize any advertisement, sales literature or other communications to *any* customer[s] or *member of* the public concerning options which:

* * * * *

** * * Interpretations and Policies:*

.01 The special risks attendant to options transactions and the complexities of certain options investment strategies shall be reflected in any *advertisement or sales literature* [communication] which discusses the uses or advantages of options. *All advertisements and sales literature discussing the use of options should include a warning to the effect that options are not for everyone.* In the preparation of *written* communications respecting options, the following guidelines shall be observed:

* * * * *

B. It should not be suggested that options are suitable for all investors. [All communications discussing the use of options should include a warning to the effect that options are not for everyone.]

* * * * *

.03 Written communications (other than advertisements) pertaining to options shall conform to the following standards:

A. [Such communications] *Sales literature* shall state that supporting documentation for any claims (including any claims made on behalf of options programs or the options expertise of sales persons), comparisons, recommendations, statistics or other technical data, will be supplied upon request.

* * * * *

C. Such communications may feature records and statistics which portray the performance of past recommendations or of actual transactions *of the member organization (but not of an individual Registered Representative),* provided that:

(i) Any *such portrayal is done in a balanced manner, and consists of* records or statistics *that are* [must be] confined to a specific "universe" that can be fully isolated and circumscribed and that covers at least the most recent 12-month period;

(ii) Such communications include [or offer to provide] the date of each initial recommendation or transaction, the price of each such recommendation or transaction as of such date, and the date and price of each recommendation or transaction at the end of the period or when liquidation was suggested or effected, whichever was earlier: *Provided, That if the communications are limited to summarized or averaged records or statistics, in lieu of the complete record there may be included the number of items recommended or transacted, the number that advanced and the number that declined, together with an offer to provide the complete record upon request;*

* * * * *

[(iv) In the event such records or statistics are summarized or averaged, such communications include the number of items recommended or transacted, the number that advanced and the number that declined;]

[renumber (v)–(vii) as (iv)–(vi)]

* * * * *

F. If a member organization has adopted a standard form of worksheet for a particular options strategy, nonstandard worksheets for that strategy may not be used.

[renumber paragraph F as paragraph G.]

Educational Circular Under Rule 4.1

Front–Running of Blocks

This educational circular presents the Exchange's enforcement policy with respect to certain practices generally referred to as "front-running of blocks". Because a block transaction in an underlying security may have an impact on the market for that security or the options covering that security (or vice versa), the Exchange would be concerned if its members were to engage in the practice of trading in options or in underlying securities when they are in possession of material non-public information concerning block transactions in these securities. In keeping with its responsibility to assure the fairness of its market, the Exchange wishes to emphasize that this kind of activity on the part of market professionals is conduct inconsistent with just and equitable principles of trade and will be dealt with in enforcement proceedings under Chapter XVII.

Although it is not possible to provide an all-inclusive definition of front-running in all of its forms, the Exchange believes that it is important to provide [, so far as possible, clear and unambiguous] standards describing the kind of conduct that will not be permitted, both in order to provide guidance for members and to avoid interfering with entirely legitimate transactions that do not involve front-running. For this purpose, the Exchange has prepared this educational circular [containing a discussion and examples of] *discussing the kind of* conduct involving the front-running of blocks that would be considered to be in violation of Rule 4.1. It must be recognized that the following discussion of prohibited conduct is not exclusive, and that conduct not specifically described in this circular may nonetheless constitute front-running that comes within the broad prohibition of Rule 4.1. Although this circular concentrates on proprietary trading of members, front-running violations may also occur in certain agency situations, such as where a member passes on non-public information concerning block transactions to a customer who then trades on the basis of the information.

The Exchange considers it to be conduct inconsistent with just and equitable principles of trade in violation of Rule 4.1 for a member or person associated with a member for an account in which such member or person has an interest, or for an account with respect to which such member or person exercises investment discretion, to cause to be executed.

(1) An order to buy or sell an option when such member or person causing such order to be executed has knowledge of a block transaction in the underlying security, or

(2) An order to buy or sell in underlying security when such member or person causing such order to be executed has knowledge of a block transaction in an option covering that security,

prior to the time information concerning the block transaction has been made publicly available. Front-running may be based upon knowledge of less than all of the terms of the transaction, so long as there is knowledge that all of the material terms of the transaction have been or will imminently be agreed upon. Notwithstanding the foregoing, if a member firm receives at or about the same time a customer's order of block size relating to both an option and the underlying security, the member may position the other side of one or both components of the order, subject to

applicable exchange rules governing crosses. However, the member firm would not be able to cover any resulting proprietary position by entering an offsetting order until information concerning all block transactions involved has been made publicly available.

The application of this circular is limited to transactions that are required to be reported on the last sale reporting systems administered by CTA or OPRA, and information as to a block transaction shall be considered to be publicly available when it has been disseminated via the tape or high speed communication line of one of those systems. Public outcry on the Exchange Floor shall not be deemed to make such information publicly available except in unusual circumstances with the advance approval of two Floor Officials.

A transaction involving 10,000 shares or more of an underlying security or options covering such number of shares shall be conclusively deemed to be a block transaction, although transactions of less than 10,000 shares may also be block transactions in appropriate cases. A block transaction that has been agreed upon does not lose its identity as such by arranging partial execution of the transaction in portions which themselves are not of block size. In this situation, the requirement that information concerning the transaction be made publicly available will not be satisfied until the entire block transaction has been completed and publicly reported.

[The application of Rule 4.1 to front-running is illustrated by, but not limited to, the following examples:

Example No. 1. Member A has agreed to a transaction involving the sale for its own account or for the account of a customer of 10,000 shares of XYZ common stock, a security listed on the New York Stock Exchange, at a price of 18½. Regardless of whether this price is within or without the bid or offer quoted for XYZ, Member A may not buy or sell any XYZ options for its own account until the sale of the 10,000 shares of XYZ has been reported over CTA Network A. Once the sale has been reported, Member A is free to trade XYZ options.

Example No. 2. Member A has agreed to a transaction involving the purchase of 100 XYZ July 20 options for a premium of 2⅛ for its own account or for the account of a customer. Until this block option transaction has been reported over the OPRA high speed network, Member A may not buy or sell any shares of XYZ common stock for its own account.]

Effectiveness Timetable

Rule	No. of days following Commission approval[1]
9.7(b)[2]	30 days.
9.7(c)[2]	30 days for initial verification; 60 days for subsequent verification.
9.12	180 days.
9.9	30 days.
9.23	60 days.
9.8(a)	30 days.
9.8(b)	90 days.
9.8(c)	90 days.
9.8.03	90 days.
4.9	30 days.
17.1	Immediately.
9.21(a)	Immediately.
9.21(b)	90 days; until then approval under present 9.21(a).
9.21 (c), (d) and (e)	Immediately.
9.23(b)	60 days following effectiveness of Commission rule authorizing central complaint registry.
11.2(a)	60 days.
11.2(b)	Immediately.
11.2(c)	60 days.
8.9 (a) and (b)	60 days.
"Front-running" circular	Immediately.
9.6(b)	90 days.
9.10(a)	60 days.
9.10(e)	90 days.

[1] The Exchange may grant members additional time to comply with certain of these rules on a case-by-case basis, but no extension of time will be granted for more than 6 months after the effectiveness of the rule in question as stated in this table. In granting or denying requests for extensions of time the Exchange will act jointly with other self-regulatory organizations that have comparable rules insofar as the requesting parties are members of the Exchange and such other SROs.

[2] Within 12 months following their effectiveness as stated in this table, Rules 9.7(b) and (c) must be complied with in respect of customers' accounts that were approved for options transactions prior to the effectiveness of these rules in order for those accounts to remain so approved.

[FR Doc. 80-823 Filed 1-9-80; 8:45 am]

BILLING CODE 8010-01-M

[Release No. 16467]

Commission Action Declaring Effective Amendments to the Consolidated Tape Plan

January 4, 1979.

The Securities and Exchange Commission announced that it has sent to the sponsors of the joint industry plan ("Plan") delcared effective pursuant to Rule 17a-15 under the Securities Exchange Act of 1934 governing the consolidated transaction reporting system ("consolidated system"), a letter declaring various amendments to the Plan effective as of January 4, 1979. The amendments (i) establish procedures to be followed in recommencing dissemination, on a current and continuous basis, of last sale information for any security eligible for reporting in the consolidated system ("Eligible Security") which is the subject of a regulatory halt; (ii) reduce charges to vendors for access to the Network A high speed line; and (iii) eliminate or reduce certain of the charges imposed on participants or other reporting parties which are national securities exchanges for receipt of last sale information and permit any of those exchanges to enter into an agreement with the Plan processor to use the high speed line for the purpose of disseminating last sale information relating to transactions in securities other than Eligible Securities.

The text of the letter follows:

American Stock Exchange, Inc.
Midwest Stock Exchange, Incorporated
National Association of Securities Dealers, Inc.
New York Stock Exchange, Inc.
Pacific Stock Exchange, Incorporated
Philadelphia Stock Exchange, Inc.

Dear Sirs: This is in response to the filing by Consolidated Tape Association ("CTA") of various amendments to the joint industry plan ("Plan") declared effective pursuant to Rule 17a-15 under the Securities Exchange Act of 1934 ("Act") governing the consolidated transaction reporting system ("consolidated system"). The amendments are as follows:

On January 12, 1978, the CTA filed with the Commission, and on June 15, 1978, the CTA refiled with the Commission, a proposed amendment to Section X(a) of the Plan which would establish procedures to be followed in recommencing dissemination, on a current and continuous basis, of last sale information for any security eligible for reporting in the consolidated system ("Eligible Security") which is the subject of a regulatory halt. On April 5, 1978, the CTA filed with the Commission a proposed amendment to Section XI(c) of the Plan which would reduce charges to vendors for access to the Network A high speed line. On September 5, 1978, the CTA filed with the Commission proposed amendments to Section XI of the Plan which would eliminate or reduce certain of the charges imposed on participants or other reporting parties which are national securities exchanges for receipt of last sale information and permit any of those exchanges to enter into an agreement with the Plan processor to use the high speed line for the purpose of disseminating last sale information relating to transactions in securities other than Eligible Securities.

The Commission, having due regard for the pruposes of the Act, including the public interest, the protection of investors, the maintenance of fair and orderly markets, and the need to remove impediments to and perfect the mechanisms of, a national market system, has declared each of the amendments effective as of the date of this letter.

For the Commission, by the Division of Market Regulation, pursuant to delegated authority.

George A. Fitzsimmons,
Secretary.

[FR Doc. 80-817 Filed 1-9-80; 8:45 am]

BILLING CODE 8010-01-M

[Release No. 11006; 811-2393]

Lord Abbett Developing Growth Fund, Inc.; Application for an Order Declaring That Applicant Has Ceased To Be an Investment Company

January 2, 1980.

Notice is hereby given that Lord Abbett Developing Growth Fund, Inc. ("Applicant"), 63 Wall Street, New York, New York 10005, a Maryland corporation registered under the Investment Company Act of 1940 ("Act") as an open-end, diversified investment company, filed an application on October 29, 1979, pursuant to Section 8(f) of the Act and Rule 8f-1 thereunder, for an order of the Commission declaring that Applicant has ceased to be an investment company as defined in the Act. All interested persons are referred to the application of file with the Commission for a statement of the representations contained therein, which are summarized below.

Applicant states that it registered under the Act as Lord Abbett OTC Growth Fund, Inc., on July 11, 1973, and filed a registration statement pursuant to Section 8(b) of the Act on July 30, 1973. Applicant represents that its legal existence was terminated as a result of a statutory merger into Developing Growth Shares, Inc. ("New Fund"), which thereafter changed its name to Lord Abbett Developing Growth Fund. Applicant represents that all portfolio securities and other assets of Applicant in connection with the merger were transferred to New Fund on the basis of relative net asset values pursuant to the terms of the merger agreement. Applicant further represents that on February 5, 1979, immediately prior to the merger, Applicant distributed substantially all of its net investment income.

Applicant states that it has retained no assets, has no debts or other liabilities outstanding, and is not a party to any litigation or administrative proceeding. Applicant also states it has no security holders and is not now engaged, nor does it propose to engage, in any business activities other than those necessary for the winding up of its affairs.

Section 8(f) of the Act provides, in part, that when the Commission upon application finds that a registered investment company has ceased to be an investment company, it shall so declare by order and, upon the effectiveness of such order, the registration of such company shall cease to be in effect.

Notice is further given that any interested person may, not later than January 28, 1980, at 5:30 p.m., submit to the Commission in writing a request for a hearing on the matter accompanied by a statement as to the nature of his interest, the reason for such request, and the issues, if any, of fact or law proposed to be controverted, or he may request that he be notified if the Commission shall order a hearing thereon. Any such communication should be addressed: Secretary, Securities and Exchange Commission, Washington, D.C. 20549. A copy of such request shall be served personally or by mail upon Applicant at the address stated above. Proof of such service (by affidavit or, in the case of an attorney-at-law, by certificate) shall be filed contemporaneously with the request. As provided by Rule 0-5 of the rules and regulations promulgated under the Act, an order disposing of the application will be issued as of course following said date unless the Commission thereafter orders a hearing upon request or upon the Commission's own motion. Persons who request a hearing, or advice as to whether a hearing is ordered, will receive any notices and orders issued in this matter, including the date of the hearing (if ordered) and any postponements thereof.

For the Commission, by the Division of Investment Management, pursuant to delegated authority.

George A. Fitzsimmons,

Secretary.

[FR Doc. 80-819 Filed 1-9-80; 8:45 am]

BILLING CODE 8010-01-M

[Release No. 21381; 70-6374]

Michigan Power Co.; Proposed Long-Term Bank Borrowings

January 3, 1980.

Notice is hereby given that Michigan Power Company ("Michigan Power"), P.O. Box 367, Three Rivers, Michigan 49093, an electric utility subsidiary of American Electric Power Company, Inc. ("AEP"), a registered holding company, has filed with this Commission an application and an amendment thereto pursuant to the Public Utility Holding Company Act of 1935 ("Act"), designating Section 6(b) of the Act and Rule 50(a)(2) promulgated thereunder as applicable to the proposed transaction. All interested persons are referred to the amended application, which is summarized below, for a complete statement of the proposed transaction.

Michigan Power proposes to enter into a term loan agreement ("Agreement") with Manufacturers Hanover Trust Company and National Bank of Detroit (the "Banks"), under which agreement Michigan Power would issue through December 31, 1981, up to $20,000,000 principal amount of its notes ("Notes") due December 31, 1987. The loan commitments from the Banks are $13,000,000 from Manufacturers Hanover Trust Company and $7,000,000 from National Bank of Detroit. Under the Agreement Michigan Power will pay to each Bank, quarterly, a commitment fee of ½ of 1% per annum on the average unused amount of such Bank's commitment, computed from the effective date of the Agreement (which date is defined to be the 31st day following the later of the date of the order by the Michigan Public Service Commission authorizing such transaction, or the date of the order by this Commission so authorizing it).

The Notes will be due December 31, 1987, and will bear interest payable quarterly prior to maturity at a fluctuating rate per annum equal to Manufacturers Hanover Trust Company's prime rate (the "Prime Rate") to December 31, 1982, at 102% of the Prime Rate from December 31, 1982, to December 31, 1985, and at 104% of the Prime Rate from December 31, 1985, to December 31, 1987. Interest after maturity (whether by acceleration or otherwise) is payable at a fluctuating rate per annum equal at all times to 1% plus the Prime Rate. There are no compensating balances required in connection with borrowings under the Agreement.

The Notes will be prepayable, in whole at any time or in part from time to time, without penalty. The Agreement contains covenants requiring prepayment in part upon terms and conditions set forth therein if Michigan Power should sell or otherwise dispose of its gas utility property and related assets (such sale is the subject of a separate proceeding before the Commission in File No. 70-5213), and other restrictive covenants concerning liens, indebtedness and capitalization ratios, and mergers and sales of assets (excluding the gas properties).

The proceeds from the issuance of the Notes will be used by Michigan Power as follows: (1) to repay in full (no penalty being required) $7,000,000 principal amount of notes held by National Bank of Detroit, which notes bear interest at an annual rate of that bank's prime plus ¼ of 1% and require 15% compensating balances; (2) to repay in full open account advances made by AEP to Michigan Power pursuant to Commission orders in File No. 70-4538, such advances aggregating $10,250,000

as of October 15, 1979; and (3) to pay, or reimburse its treasury for the payment of, other maturing indebtedness, construction expenditures or other corporate purposes.

Michigan Power claims exemption from the competitive bidding requirements of Rule 50 for its issuance and sale of the Notes pursuant to Rule 50(a)(2).

The fees and expenses to be incurred in connection with the proposed transaction are estimated at $4,000, including legal fees of $2,000. It is stated that the Michigan Public Service Commission has jurisdiction over the proposed transaction, and that no other state commission and no federal commission, other than this Commission, has jurisdiction thereover.

Notice is further given that any interested person may not later than January 30, 1980, request in writing that a hearing be held on such matter, stating the nature of his interest, the reasons for such request, and the issues of fact or law raised by said amended application which he desires to controvert; or he may request that he be notified if the Commission should order a hearing thereon. Any such request should be addressed: Secretary, Securities and Exchange Commission, Washington, D.C. 20549. A copy of such request should be served personally or by mail upon the applicant at the above-stated address, and proof of service (by affidavit or, in case of an attorney at law, by certificate) should be filed with the request. At any time after said date the application, as amended or as it may be further amended, may be granted as provided in Rule 23 of the general rules and regulations promulgated under the Act, or the Commission may grant exemption from such rules as provided in Rules 20(a) and 100 thereof or take such other action as it may deem appropriate. Persons who request a hearing or advice as to whether a hearing is ordered will receive any notices and orders issued in this matter, including the date of the hearing (if ordered) and any postponements thereof.

For the Commission, by the Division of Corporate Regulation, pursuant to delegated authority.

George A. Fitzsimmons,

Secretary.

[FR Doc. 80-620 Filed 1-9-80; 8:45 am]

BILLING CODE 8010-01-M

[Release No. 34-16465/Jan. 3, 1980; File No. SR-NASD-79-15]

National Association of Securities Dealers Inc.; Self-Regulatory Organizations; Proposed Rule Changes

Proposed Rule Changes By: National Association of Securities Dealers, Inc., Relating To: Amendments to Article I, Section 2(d), Schedule C of the Association's By-Laws, Comments Requested By: January 31, 1980.

Pursuant to Section 19(b)(1) of the Securities Exchange Act of 1934, 15 U.S.C. 78s(b)(1), notice is hereby given that on Decmber 7, 1979, the National Association of Securities Dealers, Inc. (NASD), filed with the Securities and Exchange Commission the proposed rule changes described below. The Commission is publishing this notice to solicit comments on the proposed rule changes by interested persons.

Self-Regulatory Organization's Statement of the Terms of Substance of the Proposed Rule Changes

The NASD hereby proposes to amend Schedule C of Article I, Section 2(d) of its By-Laws in the following manner. Deleted material is indicated by brackets, additional language is italicized.

Article I, Section 2(d), Schedule C

Part I, Section (2)

Subsections (a) through (d)—No change

(e) Registered Options Principals

(i) Every member of the Corporation which is engaged in, or which intends to engage in transactions in put or call options with the public[, or for its own account,] shall have at least one Registered Options Principal who shall have satisfied the requirements of Part I, Paragraph (5) hereof. Each such member shall also designate a Senior Registered Options Principal and identify such person to the Corporation. A member which has a Registered Options Principal qualified in either put or call options shall not engage in both put and call option transactions until such time as it has a Registered Options Principal qualified in both such options. Every person engaged in the management of the day-to-day options activities of a member shall also be registered as a Registered Options Principal. In the event any Registered Options Principal ceases to act in such capacity, such fact shall be reported promptly to the Corporation together with a brief statement of the reasons therefor.

Subsection (ii) through (iv)—No change

Resolution of the Board of Governors

Members having a single Registered Options Principal are required promptly to notify the Corporation in the event such person is terminated, resigns, becomes incapacitated or is otherwise unable to perform the duties of an Options Principal.

Following receipt of such notification, the Corporation will require members to agree, in writing, to refrain from engaging in any options-related activities which would necessitate the prior or subsequent approval of an Options Principal including, among other things, the opening of new options accounts or the execution of discretionary orders for option contracts until such time as a new Registered Options Principal has been qualified.

Members failing to qualify a new Registered Options Principal within two weeks following the loss of their sole Registered Options Principal, or by the earliest available date for administration of the Series 4 Options Principal examination, whichever is longer, shall be required to cease doing an options business; provided, however, they may effect closing transactions in order to reduce or eliminate existing open options positions in their own account as well as the accounts of their customers.

Procedure of Self-Regulatory Organization

The amendments to Schedule C were recommended by the Association's Options Committee in response to requests from the membership. The amendments were approved by the Association's Board of Governors on November 16, 1979, pursuant to Article I, Section 2(d) of the By-Laws which does not require approval by the membership for such changes.

Self-Regulatory Organization's Statement of Purpose of Proposed Rule Change

Section 2(e)(i) of Part I to Schedule C is being amended to conform the Association's rules regarding the qualification of Registered Options Principals with those of the options exchanges. At present, Association rules require all members which engage in option transactions either with the public or for their own account to have at least one Registered Options Principal. This provision is inconsistent with the rules of the options exchanges whose qualification requirements governing Registered Options Principals extend only to those of their members which do a public options business. Approval of the proposed amendments

to Schedule C will eliminate this inconsistency and provide for uniformity among the self-regulatory organizations in this particular area of options regulation.

A new Resolution of the Board of Governors has been adopted outlining the procedures to be followed in the event a member loses its sole Registered Options Principal as a result of, among other things, termination, resignation or death. For firms with a single Options Principal, the sudden loss of this person could place them in violation of Association rules which require all members doing an options business to have at least one ROP. The resolution is designed to provide such members with a reasonable amount of time in which to qualify a new Registered Options Principal while allowing them in the interim to conduct a limited options business.

Self-Regulatory Organization's Statement of Basis Under the Act for Proposed Rule Change

Section 15A(b)(6) of the Act, which applies to registered securities associations requires that "[t]he rules of the Association [be] designed to prevent fraudulent and manipulative acts and practices, to promote just and equitable principles of trade, * * *, and, in general, to protect investors and the public interest * * *." Accordingly, the proposed amendments are consistent with the requirements of the Act.

Comments Received From Members, Participants or Others on Proposed Rule Changes

No Comments were solicited or received with respect to the specific rule change proposals. As previously noted, however, adoption of the amendment to Section 2(e)(i) of Schedule C was prompted by letters from the Association's membership.

Burden on Competition

The Association believes that the proposed rule changes do not impose any burden on competition. In fact, by eliminating the requirement for firms which do not do an options business with the public to have an Options Principal, the Association has lessened the burdens imposed under its current rules on members which only trade options for their own account. In addition, by providing an orderly procedure for firms to follow in replacing their sole Registered Options Principal, the Association has eased the burdens imposed on such firms under our current Options Principal requirement.

On or before February 14, 1980, or within such longer period (i) as the Commission may designate up to 90 days if it finds such longer period to be appropriate and publishes its reasons for so finding or (ii) as to which the Association consents, the Commission will:

(A) By order approve such proposed rule changes, or

(B) Institute proceedings to determine whether the proposed rule changes should be disapproved.

Interested persons are invited to submit written data, views and arguments concerning the foregoing. Persons desiring to make written submission should file six copies thereof with the Secretary, Securities and Exchange Commission, 500 North Capitol Street, Washington, D.C. 20549. Copies of the submission, all subsequent amendments, all written statements with respect to the proposed rule change that are filed with the Commission, and of all written communications relating to the proposed rule change between the Commission and any person, other than those that may be withheld from the public in accordance with the provisions of 5 U.S.C. Section 522, will be available for inspection and copying in the Commission's Public Reference Section, 1100 L Street NW., Washington, D.C. Copies of such filings will also be available for inspection and copying at the principal office of the above-mentioned self-regulatory organization. All submissions should refer to the file number referred in the caption above and should be submitted on or before January 31, 1980.

For the Commission, by the Division of Market Regulation pursuant to delegated authority.

George A. Fitzsimmons,

Secretary.

January 3, 1980.

[FR Doc. 80-824 Filed 1-9-80; 8:45 am]

BILLING CODE 8010-01-M

[Release No. 21383; 70-6241]

National Fuel Gas Co. and Seneca Resources Corp.; Proposed Issuance and Sale of Short-Term Notes to Bank by Subsidiary Company and Guaranty Thereof by Holding Company

In the matter of National Fuel Gas Company, 30 Rockefeller Plaza, New York, New York 10020; Seneca Resources Corporation, 10 Lafayette Square, Buffalo, New York 14203.

Notice is hereby given that National Fuel Gas Company ("National"), a registered holding company, and one of its wholly-owned subsidiary companies, Seneca Resources Corporation ("Seneca") have filed with this Commission a post-effective amendment to the declaration in this proceeding pursuant to Sections 6(a), 7, and 12(b) of the Public Utility Holding Company Company Act of 1935 ("Act") and Rule 45 promulgated thereunder regarding the following proposed transactions. All interested person are referred to the amended declaration, which is summarized below, for a complete statement of the proposed transactions.

By order in this proceeding dated February 2, 1979 (HCAR No. 20911), Seneca was authorized to issue and sell not to exceed $20,000,000 of short-term notes outstanding at any one time to Houston National Bank, such notes to be unconditionally guaranteed by National. In accordance therewith, Seneca currently has $20,000,000 of short-term borrowings outstanding pursuant to a note issued under a loan agreement, which note becomes due on January 31, 1980. Payment of principal and interest on the note is unconditionally guaranteed by National.

Seneca and National now request that the authorization for the issuance and sale of such $20,000,000 of notes, and the guarantee by National, be extended for a period of nine months so that Seneca may borrow or reborrow up to $20,000,000 from the bank on the same terms and conditions. Any new note issued, or any outstanding note of which the maturity date is extended, shall mature not later than October 31, 1980. Payment of principal and interest on such note will be unconditionally guaranteed by National.

The note or notes will continue to bear interest not in excess of the prime rate of interest at Houston National Bank as it fluctuates from time to time. In addition, Seneca has agreed with the bank to maintain deposits at the bank ("Average Daily Available Balance") equal to 10% of the amount of funds available under the loan agreement plus 10% of the amount drawn down by Seneca under the loan agreement. In the event that the Average Daily Available Balance is less than the required amount during a three-month period, Seneca has agreed to pay the bank a fee equal to the greater of (a) the average prime rate of the bank for the period or (b) the average rate paid by the bank for 90-day certificates of deposit (with certain adjustments) multiplied by the amount of the deficiency in the Average Daily Available Balance. Assuming Seneca borrows the full amount available under the loan agreement and determines not to maintain the required Average Daily Available Balance, based on a 15.25% prime rate and a 13.50% rate for 90-day

certificates of deposit, Seneca would be obligated to pay the Bank $610,000 annually pursuant to this provision, and its effective cost of money would be 18.30% per annum.

Seneca is currently planning to refund the $20,000,000 short-term note or notes by issuing a long-term note or notes which will be secured by approximately 65,000 acres of hardwood timber owned by Seneca and located in Pennsylvania. Seneca expects that such note or notes will be placed with an insurance company which has had experience with similar loans secured by timber.

It is stated that no special and separable fees and expenses are to be incurred and that no state or federal commission, other than this Commission, has jurisdiction over the proposed transactions.

Notice is further given that any interested person may, not later than January 28, 1980, request in writing that a hearing be held on such matter, stating the nature of his interest, the reasons for such request, and the issues of fact or law raised by said post-effective amendment to the declaration which he desires to controvert; or he may request that he be notified if the Commission should order a hearing thereon. Any such request should be addressed: Secretary, Securities and Exchange Commission, Washington, D.C. 20549. A copy of such request should be served personally or by mail upon the declarants at the above-stated addresses, and proof of service (by affidavit or, in case of an attorney at law, by certificate) should be filed with the request. At any time after said date, the declaration, as now amended or as it may be further amended, may be permitted to become effective as provided in Rule 23 of the general rules and regulations promulgated under the act, or the Commission may grant exemption from such rules as provided in Rules 20(a) and 100 thereof or take such other action as it may deem appropriate. Persons who request a hearing or advice as to whether a hearing is ordered will receive any notices and orders issued in this matter, including the date of the hearing (if ordered) and any postponements thereof.

For the Commission, by the Division of Corporate Regulation, pursuant to delegated authority.

George A. Fitzsimmons,

Secretary.

[FR Doc. 80-821 Filed 1-9-80; 8:45 am]

BILLING CODE 8010-01-M

[Release No. 34-16461; File No. SR-NYSE-79-47]

New York Stock Exchange, Inc. ("NYSE"); Proposed Rule Changes

Pursuant to Section 19(b)(1) of the Securities Exchange Act of 1934, 15 U.S.C. 78s(b)(1), as amended by Pub. L. No. 94-29, 16 (June 4, 1975), notice is hereby given that on November 21, 1979, the above-mentioned self-regulatory organization filed with the Securities and Exchange Commission proposed rule changes as follows:

Terms of Substance of the Proposed Rule Changes

The proposed rule changes would change the amounts set forth in NYSE Rules 451 and 465 as reasonable for a member organization to charge an issuer for forwarding issuer communications to beneficial shareowners. The proposal would not change the recommended rate for the initial mailing of proxy material. However, the recommended chargeable rate for each mailing of follow-up proxy material would increase from 10 cents per set to (a) 50 cents for a selective mailing to those beneficial owners who did not respond to the first mailing, or (b) 30 cents for a mailing to all beneficial owners. The minimum recommended rate for all sets of either initial or follow-up proxy material mailings also would increase from three to five dollars. In addition, the proposal would increase from 10 to 20 cents the recommended rate for interim report mailings, and would set a two dollar recommended minimum for all sets mailed. Finally, the proposal clarifies that the term "proxy material" includes the proxy statement, form of proxy and annual report when mailed as a unit.

NYSE's Statement of the Purpose of the Proposed Rule Changes

Member organizations acting as custodians for their customers who are beneficial owners of securities are required by the rules of the Exchange to transmit proxy soliciting material, interim reports, and other material to each beneficial owner whenever the issuer shall furnish the material and give satisfactory assurance that it will reimburse member organizations for all out-of-pocket expenses, including reasonable clerical expenses.

The processing and transmitting of proxy material and the tabulation of votes demand a substantial amount of clerical work by the member organizations. Member organizations must be prepared to treat each proxy solicitation or other transmittal of material as an individual exercise demanding adherence to detailed corporate instructions. In most instances time is of the essence, since there is a limited period during which material received from an issuer must be mailed to beneficial owners and their votes received, tabulated and sent to the issuers in advance of the stockholders meeting date. Exchange rules require each member to maintain detailed records of the receipt and mailing of proxy material and to record the receipt of voting instructions from beneficial owners.

Absent the reimbursement arrangements provided by Rules 451 and 465, an issuer seeking to communicate with beneficial owners must reach an agreement each time on handling and mailing costs with each member organization which holds issuers' securities for beneficial owners. Each member organization, on the other hand, would have on each such occasion a need to reach a corresponding agreement with many hundreds of issuers. To eliminate the confusion and loss of valuable time that would result if each issuer and member organization had to reach agreement on forwarding fees, the Exchange has, beginning in 1952, published reimbursement rates it deems reasonable.

Member organizations are free to negotiate and accept lower, or higher, fees than those published, and both Rules 451 and 465 so provide. A member organization seeking reimbursement at a higher rate, or seeking reimbursement for items or services not listed in Rules 451 or 465, must, however, notify the issuer and receive its consent before forwarding the material or performing the service. Refusal by the issuer to pay a higher rate would not relieve the member organization of its obligation to perform as provided in Rules 451 and 465 as described above.

The rates in this proposed rule change were determined through discussions with representatives of the listed company community (American Society of Corporate Secretaries) which will pay them, and the member organizations (Securities Industry Association) who will receive them. The rates have been changed solely with the intent of achieving cost recoupment for member organizations. The cost impact on listed companies will not be significant. The increase in follow-up charges will affect not more than 10% of the listed companies.

NYSE's Statement of Basis Under the Act for the Proposed Rule Changes

The NYSE believes that the proposed rule change will further the protection of investors and the public interest by insuring the orderly processing and

transmittal of corporate communications to the beneficial owners. Absent such suggested rates, each proxy solicitation or transmission of a report might require extended negotiations between each member organization and each issuer whose securities are held by the member organization for beneficial owners. In the case of most proxy solicitations, there is little time between the receipt of material by the member and its required return date. Consequently, the effect of ad hoc establishment of rates of reimbursement would be chaotic, and beneficial owners might effectively be denied voting participation in corporate affairs. The increase will permit member organizations to maintain a clerical staff devoted to these services, avoiding delays and inefficient processing and therefore effectively protecting investors and the public interest.

NYSE's Statement Regarding Comments Received From Members, Participants, or Others on Proposed Rule Changes

The Securities Industry Association supports the proposed changes.

The American Society of Corporate Secretaries also supports the proposed changes. While the Society, through their Securities Industry Committee, has endorsed the proposed rate increases, they have requested certain clarifications in the Exchange rules since they feel the rules do not properly cover all transmitting situations and have been subject to diverse interpretation. They have also requested that the invoice form that members utilize to bill corporations for their proxy solicitation, etc. be modified so that charges can be more easily identified by issuers. These comments are reflected in the proposed rule change.

NYSE's Statement Regarding Burden on Competition

The NYSE does not believe that the amendments to Rules 451 and 465 impose any burden on competition.

The foregoing rule change has become effective, pursuant to Section 19(b)(3) of the Securities Exchange Act of 1934. At any time within sixty days of the filing of such proposed rule change, the Commission may summarily abrogate such rule change if it appears to the Commission that such action is necessary or appropriate in the public interest, for the protection of investors, or otherwise in furtherance of the purposes of Securities Exchange Act of 1934.

Interested persons are invited to submit written data, views and arguments concerning the foregoing. Persons desiring to make written submission should file 6 copies thereof with the Secretary of the Commission, Securities and Exchange Commission, Washington, D.C. 20549. Copies of the filing with respect to the foregoing and of all written submissions will be available for inspection and copying in the Public Reference Room, 1100 L Street, NW., Washington, D.C. Copies of such filing will also be available for inspection and copying at the principal office of the above-mentioned self-regulatory organization. All submissions should refer to the file number referenced in the caption above and should be submitted on or before January 31, 1980.

For the Commission, by the Division of Market Regulation, pursuant to delegated authority.

George A. Fitzsimmons,
Secretary.

January 2, 1980.

[FR Doc. 80-825 Filed 1-9-80; 8:45 am]
BILLING CODE 8010-01-M

[Release No. 34-16464; File No. SR-PHLX 79-13]

Philadelphia Stock Exchange, Inc.; Proposed Rule Change

January 3, 1980.

Pursuant to Section 19(b)(1) of the Securities Exchange Act of 1934, 15 U.S.C. 78s(b)(1), as amended by Pub. L. No. 94-29, 16 (June 4, 1975), notice is hereby given that on December 20, 1979, the above-mentioned self-regulatory organization filed with the Securities and Exchange Commmission a proposed rule change as follows:

Exchange's Statement of Terms of Substance of the Proposed Rule Change

The Philadelphia Stock Exchange, Inc. ("PHLX") pursuant to Rule 19b-4 of the Securities Exchange Act of 1934 ("Act"), hereby proposes new Rule 1059. (Italics indicates new language.)

Rule 1059: Cabinet trading shall be available for each series of options open for trading on the Exchange under the following terms and conditions:

(i) Trading shall be conducted in accordance with other Exchange Rules except as otherwise provided herein or unless the context otherwise requires.

(ii) The specialist registered in each class of option contracts shall supervise the operation of the cabinet for that class.

(iii) Only closing limit orders at a price of $1 per option contract for the accounts of customer, firm, specialists and ROT's may be placed in the cabinet. Such orders must be submitted to the specialist in writing.

(iv) All orders placed in the cabinet shall be assigned priority based upon the sequence in which such orders are received by the specialist.

(v) Bids or offers on orders to open for the accounts of customers firm, specialists and ROT's may be made at $1 per option contract, but such orders may not be placed in and must yield to all orders in the cabinet.

(vi) Specialists shall effect all cabinet transactions by matching closing purchase or sale orders which have been placed in the cabinet or, provided there is no matching closing purchase or sale order in the cabinet, by matching a closing purchase or sale order in the cabinet with an opening purchase or sale order.

(vii) Specialists and Registered Options Traders shall not be subject to the requirements of Rule 1014 in respect of orders placed pursuant to this Rule. The provisions of Rule 1033(b) and (c), Rule 1034 and Rule 1038 shall not apply to orders placed in the cabinet. Cabinet transactions shall not be reported on the ticker.

(viii) All cabinet transactions shall be reported to the Exchange following the close each business day.

Exchange's Statement of Basis and Purpose Under the Act for Proposed Rule Change

The purpose of the proposed rule change is to file as a rule the practice concerning cabinet trading of options contracts on the PHLX.

Cabinet or accommodation trading of option contracts is intended to accommodate persons wishing to effect closing transactions in those series of options dealt in on the Exchange for which, due to the absence of a bid at the lowest fractional price $6.25) per contract permitted by PHLX Rule 1034 there is no auction market. Only orders which would result in closing (liquidating) transactions may be placed in the cabinet. Orders placed in the cabinet must be submitted in writing and at a limit price of $1 per option contract. All orders so placed are assigned priority in accordance with the sequence in which they are recieved at the trading post by the specialist in the particular class of options. Specialists have the obligation to supervise accommodation trading.

Specialists may effect accommodation transactions either by (1) matching closing purchase or sale orders which have been placed in the cabinet or (2) matching a closing purchase or sale order which has been placed in the cabinet with the opening purchase or

sale order for the accounts of customer, firm, specialists and registered options traders ("ROT's") at the cabinet bid of offer ($1), provided there is no available matching closing purchase or sale order which has been placed in the cabinet. The second alternative is provided to accommodate orders for accounts wishing to close out their positions in option series for which there is currently no matching closing cabinet order. Further, by giving specialists and ROT's, in limited circumstances, the ability to engage in hedge transactions in a series subject to cabinet trading, it potentially increases their capacity to make markets in other series in the class. Under the same limited circumstances the public is also permitted to open at the cabinet bid or offer in a series of options which is not restricted pursuant to PHLX Rule 1036 (Restriction of Out-of-the-Money Options).

Since cabinet trading does not involve any of the principles of the exchange auction market, the market making obligations of specialists and registered options traders do not extend to these types of accounts, no priority is given based on the type of accounts (customers, members, member organizations, specialists, registered options traders) for orders placed in the cabinet (e.g., closing transactions), and the only priority given with respect to transactions placed in the cabinet is the time of entry of the order with the specialist. However, as noted above, opening transactions may not be initiated at the cabinet bid or offer ($1) unless there is no matching closing purchase or sale order available in the cabinet.

The basis for the proposed rule change is found in Section 6(b)(5) of the Act which provides in pertinent part, that the rules of the Exchange be designated to facilitate transactions in securities and to protect investors and the public interest.

Comments were neither solicited nor received.

The PHLX has determined that the proposed rule change will not impose any burden on competition.

On or before February 18, 1980, or within such longer period (i) as the Commission may designate up to 90 days of such date if it finds such longer period to be appropriate and publishes its reasons for so finding or (ii) as to which the above-mentioned self-regulatory organization consents, the Commission will:

(a) By order approve such proposed rule change, or

(b) Institute proceedings to determine whether the proposed rule change should be disapproved.

Interested persons are invited to submit written data, views and arguments concerning the foregoing. Persons desiring to make written submissions should file 6 copies thereof with the Secretary of the Commission, Securities and Exchange Commission, Washington, D.C. 20549. Copies of the submission, all subsequent amendments, all written statements with respect to the proposed rule change which are filed with the Commission, and of all written communications relating to the proposed rule change between the Commission and any person, other than those which may be withheld from the public in accordance with the provisions of 5 U.S.C. 552, will be available for inspection and copying in the Public Reference Room, 1100 "L" Street, N.W., Washington, D.C. Copies of such filings and of any subsequent amendments will also be available for inspection and copying at the principal office of the above mentioned self-regulatory organization. All submissions should refer to the file number referenced in the caption above and should be submitted on or before January 31, 1980.

For the Commission, by the Division of Market Regulation pursuant to delegated authority.

George A. Fitzsimmons,

Secretary.

January 3, 1980.

[FR Doc. 80-826 Filed 1-9-80; 8:45 am]

BILLING CODE 8010-01-M

[Release No. 16469; SR-SCCP-79-13]

Stock Clearing Corp. of Philadelphia ("SCCP"); Order Approving Proposed Rule Change

January 4, 1980.

On September 21, 1979, SCCP filed with the Commission, pursuant to Section 19(b)(1) of the Securities Exchange Act of 1934, 15 U.S.C. 78s(b)(1) (the "Act") and Rule 19b-4 thereunder, a proposed rule change establishing a monthly verification procedure for statements received by members concerning each type of account they maintain.

Notice of the proposed rule change together with the terms of substance of the proposed rule change was given by publication of a Commission Release (Securities Exchange Act Release No. 16250, October 5, 1979) and by publication in the **Federal Register** 44 FR 59306, October 15, 1979. No written comments were received by the Commission.

The Commission finds that the proposed rule change is consistent with the requirements of the Act and the rules and regulations thereunder applicable to registered clearing agencies, and in particular, the requirements of Section 17A of the Act.

It is therefore ordered, pursuant to Section 19(b)(2) of the Act, that the proposed rule change be approved.

For the Commission, by the Division of Market Regulation pursuant to delegated authority.

George A. Fitzsimmons,

Secretary.

[FR Doc. 80-822 Filed 1-9-80; 8:45 am]

BILLING CODE 8010-01-M

DEPARTMENT OF STATE

[CM-8/258]

Study Group D of the U.S. Organization for the International Telegraph & Telephone Consultative Committee (CCITT)—Meeting

The Department of State announces that Study Group D of the U.S. Organization for the International Telegraph and Telephone Consultative Committee (CCITT) will meet on January 31, 1980, at 10:00 a.m. in Room 1406 of the Department of State, 2201 C Street, N.W., Washington, D.C. This Study Group deals with matters in telecommunications relating to the development of international digital data transmission services.

The agenda for the January 31 meeting will include consideration of the following:

1. Last minute reports for the final meeting of CCITT Study Group VII (February 7-15, 1980);
2. Report on meeting of CCITT Study Group XVII Working Parties (Boulder, Sept. 1979);
3. Report on preparation for final meeting of CCITT Study Group XVII (April 25-May 1, 1980);
4. Any other business.

Members of the general public may attend the meeting and join the discussion subject to the instructions of the Chairman. Admittance of public members will be limited to the seating available. In that regard, entrance to the Department of State building is controlled and entry will be facilitated if arrangements are made in advance of the meeting. It is requested that prior to January 29, members of the general public who plan to attend the meeting so advise Mr. T. de Haas, Chairman of U.S. Study Group D. Mr. de Maas can be contacted at the Institute for Telecommunication Sciences, National Telecommunications and Information Administration, Boulder, Colorado 80303, telephone number (303) 499-1000, Ext. 3728. Persons in the Washington,

D.C. metropolitan area may contact Mr. Richard H. Howarth, Department of State, telephone number 632-1007. All non-Government attendees must use the C Street entrance to the building.

Dated: January 3, 1980.

[FR Doc. 80-713 Filed 1-9-80; 8:45 am]

BILLING CODE 4710-07-M

[CM-8/260]

Shipping Coordinating Committee; Subcommittee on Safety of Life at Sea; Meeting

The working group on Subdivision and Stability of SOLAS will conduct an open meeting at 10 a.m. on Wednesday, January 23, 1980 in Room 8238 of the Department of Transportation, 400 Seventh Street, SW., Washington, D.C.

The purpose of the meeting will be to review documents and prepare for the 21st Session of the IMCO Subcommittee on Containers and Cargoes to be held in London February 11-15, 1980.

Requests for further information should be directed to either Mr. Edward H. Middleton, U.S. Coast Guard (G-MM/TP24), Washington, D.C. 20593, telephone (202) 426-2170 or Captain S. Fraser Sammis, National Cargo Bureau, Inc., Suite 2757, One World Trade Center, New York, N.Y. 10048, telephone (212) 432-1280.

Dated: December 28, 1979.

James Treichel,

Acting Director, Office of Maritime Affairs.

[FR Doc. 80-827 Filed 1-9-80; 8:45 am]

BILLING CODE 4710-07-M

[CM-8/261]

Shipping Coordinating Committee; Subcommittee on Safety of Life at Sea; Meeting

The working group on Safety of Fishing Vessels of the Subcommittee on Safety of Life at Sea, in conjunction with the Working Group on Standards of Training and Watchkeeping will conduct an open meeting at 9:30 a.m. on January 23, 1980 in Room 8334 of the Department of Transportation, Nassif Building, 400 Seventh Street, S.W., Washington, D.C.

The purpose of the meeting will be to discuss the following topics:

—Review the results of the XXIInd Session of the Subcommittee on Fishing Vessel Safety held in London (2-6 July 1979);

—Discuss documents for submittal to the XXIIIrd Session;

—Review recently submitted documents by other delegations.

Requests for further information should be directed to Mr. Frank Perrini, U.S. Coast Guard (G-MMT-5/12), Washington, D.C. 20593, telephone (202) 426-2188.

Dated: December 28, 1979.

James Treichel,

Acting Director, Office of Maritime Affairs.

[FR Doc. 80-828 Filed 1-9-80; 8:45 am]

BILLING CODE 4710-07-M

[CM-8/262]

Shipping Coordinating Committee; Subcommittee on Safety of Life at Sea; Meeting

The Working Group on Standards of Training and Watchkeeping of the Subcommittee on Safety of Life at Sea will conduct an open meeting to be held at 9:30 a.m. on Wednesday, January 23, 1980 in Room 8334 of the Nassif Building, Department of Transportation, 400 Seventh Street, S.W., Washington, D.C.

The purpose of the meeting is to discuss the agenda for the Thirteenth Session of the IMCO Subcommittee on Standards of Training and Watchkeeping and its future work program

Requests for further information should be directed to Captain D. E. Hand, U.S. Coast Guard Headquarters (G-MVP/TP14), 2100 2nd Street, S.W., Washington, D.C. 20593, telephone (202) 426-1500.

The Chairman will entertain comments from the public as time permits.

Dated: December 28, 1979.

James Treichel,

Acting Director, Office of Maritime Affairs.

[FR Doc. 80-829 Filed 1-9-80; 8:45 am]

BILLING CODE 4710-07-M

DEPARTMENT OF TRANSPORTATION

Coast Guard

[CGD 77-087]

New York Vessel Traffic Service—Delay of Voluntary Operational Period

Notice is hereby given that, due to unforeseen technical delays, the commencement of voluntary operations of New York Vessel Traffic Service, scheduled for January 2, 1980 as published in the **Federal Register** (44 FR 70267, December 6, 1979), has been delayed indefinitely. Notification of the start of voluntary operations will be made in the **Federal Register**.

Dated: January 7, 1980.

K. G. Wiman,

Captain, U.S. Coast Guard, Acting Chief, Office of Marine Environment and Systems.

[FR Doc. 80-941 Filed 1-9-80; 8:45 am]

BILLING CODE 4910-14-M

Federal Aviation Administration

High Altitude Pollution Program Scientific Advisory Committee; Meeting

Pursuant to Section 10(a)(2) of the Federal Advisory Committee Act (Pub. L. 92-463; 5 U.S.C. App. I), notice is hereby given of a meeting of the Federal Aviation Administration High Altitude Pollution Program Scientific Advisory Committee to be held January 23-25, 1980, in Conference Rooms 8A, B and C at the FAA Headquarters, 800 Independence Avenue, SW., Washington, D.C. 20591, at the following times:

January 23, 1980 10:00 a.m. to 5:00 p.m.

January 24, 1980 9:00 a.m. to 5:30 p.m.

January 25, 1980 9:00 a.m. to 12:00 noon

The agenda for the meeting includes technical progress reports from contractors working on two-dimensional atmospheric model improvements and related topics for the High Altitude Pollution Program, followed by a discussion of the status of the two-dimensional models, particularly as applied to the effect on the stratospheric ozone layer by aircraft emissions.

Attendance is open to the interested public but limited to the space available. Any member of the public wishing to attend, make a presentation, or obtain additional information should contact Dr. Narasimhan Sundararaman, AEE-300, Federal Aviation Administration, 800 Independence Avenue, SW., Washington, D.C. 20591, 202-755-8933 or 202-755-1851 by close of business January 18, 1980.

Any member of the public may present a written statement for the consideration of the committee at any time.

Issued in Washington, D.C. on December 27, 1979.

N. Sundararaman,

Manager, High Altitude Pollution Program.

[FR Doc. 80-446 Filed 1-9-80; 8:45 am]

BILLING CODE 4910-13-M

National Highway Traffic Safety Administration

Federal Motor Vehicle Safety Standards; Denial of Petition for Rulemaking

AGENCY: National Highway Traffic Safety Administration, Department of Transportation.

ACTION: Denial of petition for rulemaking.

SUMMARY: This notice denies a petition filed by Goodyear Tire and Rubber Co. (Goodyear) requesting amendments to Federal Motor Vehicle Safety Standard No. 117, *Retreaded pneumatic tires*. The petition is denied because the requested changes would permit retreaded tires to be sold which might have serious structural defects.

FOR FURTHER INFORMATION CONTACT: Arturo Casanova, Office of Vehicle Safety Standards, National Highway Traffic Safety Administration, 400 Seventh Street, S.W., Washington, D.C. 20590 (202-426-1714).

SUPPLEMENTARY INFORMATION: Goodyear filed a petition on May 15, 1979, requesting amendments to Standard No. 117 (49 CFR 571.117). Specifically, Goodyear requested changes to § 5.2.1 of that standard to facilitate retreading tires by permitting the exposure of cord fabric on a tire before processing and by permitting penetration of cord fabric on a tire during processing. Goodyear stated that the amendments were necessary for the following reasons. As to the exposure of cord fabric, Goodyear stated that it found many tire carcasses have received minor damage in the toe area of the bead, which results in a clean exposure of the cord without damage or penetration. These tires can, according to Goodyear, be effectively repaired.

As to permitting penetration of cord fabric during processing, Goodyear stated that it is often necessary to penetrate the top layer of cord on an overlap splice to ensure that as much of the original tread material as possible is removed from the casing before retreading it. Excessive amounts of original tread left on the casing, in Goodyear's estimation, will lead to premature failure of the retreaded tire.

The petition is denied for the following reasons. Permitting exposed cord on a casing before processing could result in very serious latent degradation of the tire's structural integrity. The cord system in a tire consists of three components. These are (1) the cord fabric itself, (2) the complex adhesive solutions of resin and latex applied to the cord surface to promote adhesion of the cord to the rubber, and (3) the rubber which surrounds and protects the cord. When the rubber is removed, the only protection afforded the cord fabric is the adhesive. This adhesive is not intended by itself to protect the cord and is readily susceptible to removal when the rubber is missing. When gaps appear in the exposed adhesive the cord fabric itself is exposed and unprotected from external agents like moisture. The cord fabric is very prone to moisture absorption from the environment. When the cord is moistened, it is weakened and will eventually fail to perform its intended function as a strength reinforcement for the tire. Once the exposed cords have failed, the stress intended to be borne by these cords will have to be picked up by the adjoining cords. Further, the moisture in the exposed cords will be transferred to the adjoining cords. The increased stress and the moisture will combine to cause these cords also to fail. The process can repeat until all the cords have failed. Failure of the cords substantially weakens the structural integrity of the tire, and is very likely to cause a failure.

Goodyear's assertion that these tires can be effectively repaired is inaccurate, because it is not possible to determine the extent of any moisture absorption in the tire without destroying the tire by cutting it. Furthermore, the fact that a tire can be patched and pass the requirements of Standard No. 117 with possible moisture absorption in the cords now does not mean that the cord structure will not further degrade and fail to pass those requirements while actually being used by a purchaser. In fact, these latent hazards would be hidden from the unsuspecting purchaser, who would have no way of knowing that the tire might fail while on the highway.

Goodyear's second request, that penetration of the cord fabric on the tire be permitted during processing, poses the same safety hazards. Under Goodyear's proposed amendment, a casing which had been inadvertently overbuffed, so that a cord fabric was exposed in other locations of the tire, could be retreaded and sold. As explained above, once this cord fabric is exposed, there is no procedure whereby the potential moisture absorption, with its resultant safety hazards, can be undone.

In its petition, Goodyear asserted that excessive tread left on the casing would lead to excessive heat buildup and premature failure of the retread. This assertion is true, but not quite on point. If Goodyear means to imply that the present requirements of Standard No. 117 necessitate that a retreader leave an excessive amount of tread on the casing, this agency disagrees. There have been no complaints of this type from other retreaders nor are there any safety data indicating that retreader tires are failing prematurely. If Goodyear has some evidence to support its assertion, it did not include that evidence in its petition. The current requirements of the Standard do ensure that no structural cord is exposed during processing, and this agency continues to believe that permitting such exposure would almost certainly result in some premature failures with needless danger to users of the public roads. Therefore, Goodyear's petition is denied.

The program official and attorney principally responsible for the development of this position are Arturo Casanova and Stephen Kratzke, respectively.

(Secs. 103 and 119, Pub. L. 89-563, 80 Stat. 718 (15 U.S.C. 1392, 1407); delegations of authority at 49 CFR 1.50 and 49 CFR 501.8.)

Issued on January 2, 1980.

Michael M. Finkelstein,
Associate Administrator for Rulemaking.

[FR Doc. 80-508 Filed 1-9-80; 8:45 am]
BILLING CODE 4910-59-M

Final Determination and Order Regarding Safety Related Defects in the 1971 Fiat Model 850 and the 1970-74 Fiat Model 124 Automobiles Imported and Distributed by Fiat Motors of North America, Inc.; Ruling on Petition of Inconsequentiality

I. The 1971 Model 850 Recall Campaign, #79V-078

Pursuant to section 156 of the National Traffic and Motor Vehicle Safety Act of 1966, as amended (15 U.S.C. § 1416, hereafter the "Act"), the National Highway Traffic Safety Administration hereby notifies Fiat Motors of North America, Inc. (hereafter "Fiat") that it has failed to comply with its statutory obligations in conducting the recall campaign 79V-078 for the 1971 model 850 Spyder and Racer automobiles.

On October 3, 1979, the agency conducted a hearing to determine whether Fiat had reasonably met its obligations under the Act to remedy the subject vehicles.[1]

[1] Prior to the October 3 hearing, Fiat filed a civil action in the United States District Court for the Southern District of New York seeking to enjoin the scheduled hearing. Fiat alleged that the agency had violated its constitutional due process rights by failing to provide the manufacturer with all the information required under the Act; by soliciting witness' testimony at the hearing; by comingling in one hearing separate issues relating to the model

Footnotes continued on next page

The evidence and information presented at the hearing consisted of the testimony of twelve Fiat model 850 owners, written complaints submitted by owners, and a response by the manufacturer. Additional information was submitted by the manufacturer on October 17, 1979 pursuant to an agreement between the agency and Fiat to hold the record open until that date.

The agency finds the following actions by the manufacturer to be in violation of section 154 of the Act, 15 U.S.C. 1414:

(1) The repurchase figure offered owners by Fiat is inadequate in amount and does not comply with the statutory requirement to "refund the purchase price in full, less a reasonable allowance for depreciation." 15 U.S.C. § 1412(a)(2)(A)(iii).

(2) The repurchase amounts are non-negotiable figures and do not take into account the condition and accessories of an individual car; the application of a blanket depreciation figure (absent the mileage factor) violates the statutory requirement to allow for reasonable depreciation of the vehicle.

(3) Fiat has, through agent-dealers, field representatives, regional and zone personnel, conducted the recall campaign using coercive tactics toward the owners. Such actions tend to cause owners to accept inadequate compensation, continue to use or resell a vehicle which has been declared to be unsafe for highway use, or replace the vehicle at owner expense.

(4) The manufacturer has required, as a condition of remedying the recalled vehicle, proof of valid state registration or proof of ownership for a period of twelve consecutive months, thereby excluding bona fide purchasers of the vehicle, who fail to meet these requirements.

(5) Fiat has failed to provide a remedy to owners in a timely manner.

Inadequate Repurchase Amount

The agency finds that Fiat, in electing to repurchase its defective vehicles at a price below current retail market value, has not offered owners an adequate remedy under the Act.

When a manufacturer chooses the repurchase option, rather than repair or replacement options, the statute mandates refunding of the purchase price in full less a reasonable allowance for depreciation. Although Congress did not specify a particular method of depreciation calculation, both Houses clearly intended, as demonstrated by the legislative history of the 1974 Amendments to the Act,[2] that the repurchase price should be calculated to reflect the *value* of the vehicle. In addition, the calculation must result in a repurchase amount that is sufficient to induce owners to sell their unsafe vehicles back to the manufacturer in order to fulfill the legislative purpose of removing potentially hazardous vehicles from the highways.

The agency finds, from the manufacturer's presentations, that Fiat has employed a cost accounting, straight-line method of depreciation that has no reference to the value of the vehicle, either to its owner or in the market place, and which has produced an inadequate repurchase amount that is considerably lower than current retail book (replacement) value. This non-negotiable repurchase amount, a *maximum* sum of $600 for vehicles in good condition with under 70,000 registered miles, has been rejected by owners in many instances, as testimony at the Agency's October hearing and consumer correspondence demonstrate. Fiat is well aware of the agency's position on this matter. On May 22, 1979, Fiat was informed that the agency might consider the $600 figure to be inadequate, and that the agency objected to the non-negotiable aspect of Fiat's procedures.

The agency has determined that an adequate repurchase remedy under the Act may be obtained by use of a true valuation, or economic, calculation of depreciation. Under this concept, the value of a vehicle would be compared at two different dates, the value when purchased, and the value when the defect relating to safety is discovered. The value at the later date *is* the depreciated value of the vehicle; it also represents a figure approximating that for which an owner could replace the defective vehicle with an equivalent one, without allowing any windfall to the owner. The difference between purchase price and current retail value represents the portion of the purchase price that Fiat may retain to reflect the use of the vehicle over the years. An example of this calculation would be the following: For a Fiat Model 1971 850 Spyder or Racer, the original purchase price was @ $2,300 and the current retail book value [3] averages @ $850. Use of these figures would result in Fiat's retaining $1,450 or almost ⅔ of the original purchase price of the vehicle. The portion of the original price retained as a depreciation allowance would be greater than ⅔ if inflation were taken into account. The owner's repurchase amount of $850 should provide the owner, who is not to be penalized for a manufacturer's safety defect, with the means to replace the vehicle with an equivalent one.

This valuation method will fulfill the safety mandate of the Act by offering sufficient incentive to owners to remove potentially hazardous vehicles from the highways, while ensuring equitable treatment for both owners and Fiat.

Coercive Tactics

The complaints and testimony received by the agency refer to threatening and coercive tactics employed by Fiat representatives, dealer-agents or other Fiat personnel. The complaints describe a similar pattern of treatment which does not appear to be restricted to any single state or area. After owners have been notified to bring their cars in for inspection, and when their cars have failed inspection, they have been informed that their cars have advanced corrosion in the undercarriage, suspension or steering system attachment points and are no longer safe to operate. The dealers or zone representatives then have made offers to repurchase the vehicles for $600, $500 or $300, depending on the mileage of the vehicles. Owners refusing these offers have been told to sign a document in order to retrieve their cars. This document has been referred to by dealers or Fiat representatives as a "release." The document, signed by a Vice-President of Fiat, contains the following language: "We hereby disclaim any and all responsibility for any personal injury, property damage, loss, or expense of any nature whatsoever which you or any other

---

Footnotes continued from last page
850 and the model 124; by refusing to postpone the hearing date; and by failing to provide a fair and impartial tribunal to review the hearing's issues. The court denied Fiat's injunctive relief, after addressing and overruling each of Fiat's allegations. At the October 3 hearing, Fiat filed procedural objections to the hearing which raised the same allegations of denials of due process. The agency regards Fiat's renewed procedural objections to be insufficient to warrant any delay or alteration of the proceedings. In reaching this conclusion the agency adopts the reasoning of the court's order entered in denying Fiat's injunction on September 27, 1979. In addition the agency notes that its enforcement proceedings under the Safety Act are not formal adjudicatory proceedings within the meaning of the Administrative Procedure Act requiring the procedural strictures advocated by Fiat. The October 3 hearing was conducted in full compliance with the statutory mandates under section 152 and 156 of the Act, 15 U.S.C. 1412, 1416, to allow the manufacturer the opportunity to present data, views and arguments on the respective issues.

[2] Motor Vehicle and School Bus Safety Amendments of 1974, *Conference Report*, House of Representatives, Report No. 93-1452 *Report of the Senate Committee on Commerce on S. 355*, Report No. 93-150 *Report Together with Minority Views to Accompany H.R. 5529*, Report No. 93-1191.

[3] National Market Reports "Red Book" publication and National Automobile Order Associations "Blue Book" publication.

person may suffer as a result, directly or indirectly, of the use or operation of such motor vehicle."

Fiat has responded to these allegations by stating that the document referred to is a "declaration notice" issued dealers along with manufacturer's recall campaign booklet for the purpose of informing owners of Fiat's position. Fiat further states that the document was not intended to be used as a release; that no owner's signature was required, nor were dealers instructed to obtain a signature; and that any actions by the dealers to the contrary were unauthorized by Fiat.

The manufacturer's response concerning its dealers' lack of authority has been clearly contradicted in evidence obtained from the manufacturer itself which shows that Fiat closely supervised its dealers as to the use and purpose of the forms found in the campaign booklet.[4] Moreoever, the complaints from owners covered an extensive geographic area, negating the possibility that such statements were made randomly or solely on the initiative of mistaken dealers. Because dealers should not have a financial interest in minimizing the cost of a recall campaign,[5] there appears to be no reason why any number of Fiat dealers would make such a mistake unless they were instructed to do so by Fiat. While the document, which requires the owner's "name" to be entered at the bottom of the page, does not specify "signature", its form at least suggests that a signature is intended, and some owners testified they believed it was required.

In addition to being told that they must sign a release, several owners were told that the provisions of the recall compaign, including the repurchase price and the current registration requirement, had been agreed upon by the government. These statements were in clear contradiction to the agency's position, and Fiat was well aware that they were. The agency, on May 22, notified Fiat that it objected to the $600 repurchase figure, the non-negotiable aspects of the repurchase, and the current registration requirement. The effect of such statements by Fiat representatives could only be to further coerce owners to accept inadequate repurchase amounts.

Fiat claimed at the October 3 proceeding that it learned of these misrepresentations in July, 1979, and undertook immediate corrective measures to prevent further misrepresentations of the government's position from being made. The only evidence offered by Fiat to verify that such corrective measures were taken is a memorandum, dated October 16, 1979, and addressed to Fiat's legal counsel, which reconstructs the events in July.[6]

Fiat's October 3 and October 17 submissions implicitly acknowledge that these misrepresentations were made, while there is at least a suggestion that dealers, rather than Fiat's own employees, made the statements. The owners' reports of such statements are numerous and clearly identify Fiat employees as having made them. One owner gave a detailed description of a conversation occuring as late as August 20, 1979 with a Fiat employee, in which such a misrepresentation of the government's position was made.[7]

In sum, Fiat has not responded in good faith either to the agency or the owners regarding the allegations of coercive tactics employed during the recall campaign.

The Safety Act places the obligation to recall and remedy on the manufacturer.[8] This obligation cannot be evaded by shifting the blame or the responsibility to dealers for statements made and actions taken during a campaign. For purposes of carrying out any recall provision, the dealer is the manufacturer's agent, if the manufacturer elects to implement the recall through its dealers, and acts solely under the direction of the manufacturer.

We find these tactics by Fiat to be an attempt to induce owners to accept inadequate amounts for the recalled vehicles or, in the alternative, to release Fiat from liability resulting from the owner's continued use of a car which Fiat has found unsafe to operate. Both options result in the owner bearing the loss resulting from the defect.

Congress, in 1974, amended the Act in order to avoid the results that Fiat seeks to achieve. The Senate Committee on Commerce, when considering the repair provisions of the amendment, expressed the view that the consumer should not bear the loss brought about by a recall campaign; and that the manufacturer must provide a remedy that is attractive and convenient to the consumer to induce the consumer to have the vehicle remedied.[9] This philosophy was maintained throughout the passage of the bill and is reflected in the final version of the Act wherein the manufacturer is required to remedy defective vehicle free of charge, by electing one of these options—repair, replacement or repurchase. The tactics employed by Fiat during this campaign are designed to yield results which are in direct opposition to that spirit and purpose of the Act.

12-Month Ownership Requirement

Upon initiating the campaign, Fiat notified the agency that it would require proof that a recalled vehicle was currently registered before undertaking either to repair or repurchase vehicles found to be structurally corroded. On May 22, 1979, the agency informed Fiat that such a requirement violated the manufacturer's statutory obligation to remedy recalled vehicles, by excluding vehicles that clearly were subject to the recall campaign. In August, Fiat modified the registration requirement by requiring proof of ownership for a period of twelve consecutive months. Fiat contends that a car which cannot be lawfully driven does not constitute a threat to highway safety and therefore is not subject to the Act's recall and remedy provisions. Fiat further contends that the initial registration requirement was valid.

The Act requires the manufacturer to provide a remedy free of charge, to owners or purchasers of recalled vehicles. It does not limit that obligation through prerequisites such as length of ownership or current registration of the vehicle.

The fact that a car can no longer be lawfully driven is not conclusive proof that the car will never be in use on the highway. Nor does it diminish the obligation of the manufacturer to remove the unsafe vehicle from the highway and to repair, repurchase or replace it. The manufacturer cannot place the costs incurred on owners who have purchased the vehicles in good faith.

Another problem with the registration requirement is that a car may not be registerable due to excessive corrosion of the underbody. Congress did not intend that the remedy provisions of the Act allow the manufacturer to benefit from the defect which has necessitated the recall.

Timely Remedy

Many owners complained that after receiving notice from Fiat that their vehicles may contain a safety defect,

[4] Appendix E, *1971 Model 850 Recall* (C7-30, Ex. 33; Transcript, *Fiat Rust Investigation*, August 6, 1979, pp. 130-131.

[5] (See § 154(a)(3) of the Safety Act, 15 U.S.C. 1414(a)(3)).

[6] Appendix E, *1971 Model 850 Recall*, (C7-30, Ex. 33).

[7] Transcript: Recall of 1970-74 Fiat Spyders and 124's, October 3, 1979, pp. 23-24.

[8] 15 U.S.C. 1411 to 1414.

[9] Motor Vehicle and School Bus Safety Amendments of 1974, *Report of the Senate Committee on Commerce on S. 355*, Report No. 93-150, p. 7.

Fiat had unduly delayed in recontacting the owners to inspect the vehicle, and had failed to reimburse the owners in a timely manner upon subsequent repurchase. The owners were required to surrender the vehicle to Fiat for salvage prior to receiving reimbursement, and several owners complained of a four to eight-week delay.

The legislative history of the Act emphasized the need for timeliness of the remedy.[10] The remedy is not reasonable if it is not timely. Fiat's failure to reimburse owners for a period of one to two months is untimely and unreasonable. The repurchase of a vehicle does not involve ordering necessary repair parts or kits, and the sixty-day time period allowed the manufacturer under section 154(b) of the Act (15 U.S.C. 1414(b)) does not apply.

Conclusion

It is the practice of this agency to allow manufacturers, when conducting a recall campaign, to decide the terms and provisions of the campaign. It is usually impossible for the agency to determine the adequacy of a remedy in advance. The Act obligates the manufacturer to provide an adequate remedy and provides in section 156 a means for testing its adequacy in light of particular facts. Fiat has demonstrated to the agency, however, that it has not and will not conduct the 1971 model 850 campaign in accordance with the requirements of the Act. For this reason, the agency has established provisions to be followed by Fiat to correct the 1971 model 850 campaign #79V–078.

Pursuant to the authority under section 156 of the Safety Act, 15 U.S.C. 1416, I hereby order the manufacturer to correct the provisions and terms of recall campaign #79V–078 in the following manner:

(1) to re-notify all owners or purchasers of 1971 model 850 vehicles subject to the recall campaign, with the contents of such notification subject to agency approval;

(2) to provide a reasonable remedy for recalled vehicles found to be structurally corroded by either repairing, replacing or repurhasing the vehicles;

(3) where the vehicle is to be repurchased, the following repurchase procedure is to be used:

Step 1. Obtain from both the *Red Book*, published by National Market Reports, current for January 1, 1979, and the N.A.D.A. Book ("Blue Book") published by the National Automobile Dealers Association, current for January 1, 1979, the average retail price of the comparable 1972 model, using the version of the books which are applicable to the particular region in which the owner resides.

Step 2. Average the two prices.

Step 3. Take 80% of the value found by averaging.

Step 4. Subtract repair costs for substantial collision body damage from the amount arrived at in Step 3.

The amount arrived at after Step 4 is then to be used as the basic guideline for owner negotiations.

As there are always vehicles which are in extraordinarily good or poor condition (safety-related rust and corrosion to be excluded) certain flexibility on the manufacturer's part is expected when dealing with such vehicles.

With regard to mileage on 1971 vehicles, unless the mileage exceeds 100,000 miles, mileage will not be deemed to extraordinarily depreciate a vehicle. However, mileage of less than 50,000 miles should reflect a premium value.

(4) The manufacturer may not refuse to repurchase a vehicle solely on the basis of length of purchaser's ownership of the vehicle. Where the manufacturer refuses to repurchase a vehicle found to be structurally corroded, the manufacturer must submit to the agency in writing within fourteen days of its refusal, the reasons for refusal. If the agency determines that the manufacturer has wrongfully refused to repurchase the vehicle, the manufacturer must negotiate a price for the vehicle in accordance with the repurchase procedures in item (3), and must offer to repurchase the vehicle for the negotiated amount. The factors to be considered in refusing to repurchase are the amount paid for the car in conjunction with the time of purchase of the car, and the condition of the car.

(5) The manufacturer must submit the agency on a monthly basis, the following information:

# of offers to repurchase vehicles
# of offers accepted, listing the amount of each offer
# of offers rejected, listing the amount of each offer
# of vehicles repaired

For each offer and repair listed, state the name, address and phone number of the owner.

(6) Where the manufacturer repurchases the vehicle, reimbursement to the owner is to be made simultaneously with the owner's surrendering the vehicle to the manufacturer for salvage. Repurchase must occur within thirty days after the inspection procedure is completed.

II. The 1970–74 Model 124 Investigation, C7–30

Final Determination of Safety Related Defect

Pursuant to section 108 of the Act, (15 U.S.C. § 1412) the agency hereby notifies Fiat of its finding of action 108(a)(1)(D) (15 U.S.C. § 1411) in that Fiat has made or in good faith should have made a determination that a safety-related defect exists in the 1970–74 model 124, and has failed to issue notification to the agency and to all owners or purchasers of its determination, and has failed to remedy the vehicle in accordance with section 151 of the Act. (15 U.S.C. § 1414).

Further, the agency hereby notifies Fiat, pursuant to section 152 of the Act (15 U.S.C. 1412) of its finding that a defect which relates to motor vehicle safety exists in the 1970–74 model 124 due to excessive undercarriage corrosion of critical structural components, the failure of which may result in vehicle crash or loss of vehicle control.

Noncompliance With Section 151 of the Act

The agency opened its investigation on the 1970–74 model 124 in July, 1977. The investigation also included the model 850 for the same model years. The investigation was opened in response to complaints received on the two models which were virtually identical to the descriptions of undercarriage corrosion failure in a third Fiat, the model 128. Fiat had initiated a statutory recall campaign on June 24, 1974 for 1971–73 model 128 vehicles with undercarriage corrosion failure. At that time, there were no pending agency investigations regarding corrosion on any Fiat make or model.

On January 16, 1979, the agency issued its finding of an initial determination of a defect resulting from undercarriage corrosion for the 1970–74 models 124 and 850. After discussions between the agency and Fiat in March, 1979, Fiat agreed to recall the 1970–71 model 850 and the agency agreed to suspend its determination in the model 124 and remaining model 850s. The agency agreed to suspend the model 124 finding after Fiat represented to the agency, through a statistical analysis of the complaints on both the model 850 and 124, that the structural corrosion problem was concentrated in the 1970–71 model 850, and resulted from a quality control problem in the Bertone assembly plant which would not have affected other vehicles. It was agreed, however, that the agency would reopen the investigation should consumer reponse indicate the need to do so.

[10] Motor Vehicle and School Bus Safety Amendments of 1974, *Report Together With Minority Views to Accompany H.R. 5529*, Report No. 93–1199, p. 16.

Shortly after suspending the model 124 finding, the agency began receiving complaints from model 124 owners which described a repurchase campaign identical to the one being conducted on the model 850. Selected owners were notified by letter to bring their cars in for inspection and after inspection were told their cars were unsafe to drive; owners were then made repurchase offers for their vehicles and told to sign a relase. These owners alleged that Fiat used the same coercive tactics as found in the model 850 campaign. The offers reported to the agency generally did not exceed $600.

The agency learned through the testimony of three Fiat employees that Fiat was, in fact, conducting such a recall campaign. In April, 1979, two weeks after the close of negotiations with the agency, and the decision to withdraw the initial defect determination at Fiat's request, Fiat initiated a nation-wide repurchase program solely for vehicles with undercarriage structural corrosion which were not included in the model 850 campaign. A booklet issued to all regional offices instructed personnel to buy back only those cars found to be unsafe for highway use due to structural corrosion.[11] From April 1, 1979 to June 30, 1979, Fiat repurchased 58 1970–74 model 124s. Prior to this time, a total of 46 model 124s had been repurchased over a period of two years.[12]

The manufacturer's first defense to its repurchase actions on the model 124 is that Fiat undertook a good-will campaign in an effort to compensate owners with product complaints, and that such a campaign was in response to complaints generated by the agency's press release issued in March, 1979 announcing the terms of the agreement regarding the model 850 and 124.

Simply stated, the facts do not bear out the manufacturer's explanation of its activities. The facts before this agency show that Fiat is engaged in a systematic program to repurchase 1970–74 model 124 vehicles each of which Fiat has determined to be unsafe for highway use as a result of undercarriage corrosion; that Fiat represented to the agency in March, 1979 that a significant rust problem did not and would not exist in the model 124; that two weeks after convincing the agency to suspend the 124 finding, Fiat began this systematic buy back campaign of the model 124; that Fiat's behavior toward vehicle owners has been coercive and misleading in an attempt to induce owners to accept low repurchase offers.

Fiat's second defense to its buy back of model 124 vehicles is that the agency cannot review under section 156 of the Act the manufacturer's repurchase activities prior to its issuing a final determination under section 152 of the Act. It advances this argument as follows. Fiat argues that it made no determination of a safety-related defect, and that this is evidenced by its position during the March, 1979 negotiations; therefore, the manufacturer's obligations to recall and remedy under section 151 has not been invoked. Until the agency issues a final determination under section 152 and orders a recall, or until a manufacturer recalls under section 151, the agency cannot review a manufacturers' repurchase actions during the interim.

Under Fiat's interpretation of the Act, a manufacturer, after persuading the agency to suspend section 152 proceedings, may undertake to eliminate the vehicles which were the subject of the proceedings, and by doing so, may avoid the notification and remedy requirements of the Act as long as the manufacturer does not formally exhibit an intention to comply with section 151. Further, Fiat argues that until the agency reinstitutes section 152 proceedings or the manufacturer announces its intentions to comply with section 151, the agency is powerless to act. To interpret the Act and the agency's statutory authority under it in this manner is to cripple the agency's investigative power while allowing the manufacturer, through either negligence or bad faith, to circumvent its responsibilities under the Act.

Section 151 states, in pertinent part:

Sec. 151. If a manufacturer—

(1) obtains knowledge that any motor vehicle or item of replacement equipment manufactured by him contains a defect and determines in good faith that such defect relates to motor vehicle safety; . . . he shall furnish notification to the Secretary and to owners, purchasers, and dealers, in accordance with section 153, and he shall remedy the defect or failure to comply in accordance with section 154.

This section contemplates good faith on the part of the manufacturer, and its purpose is not to be manipulated to shield the bad faith conduct of a manufacturer in avoiding those requirements. Despite the fact that Fiat has not formally followed the requirements under section 151, the facts show that Fiat has nonetheless made a determination as defined by that section. Fiat has repurchased vehicles with undercarriage corrosion that, as Fiat has stated to owners, renders the vehicles unsafe for highway use, and has attempted either to remove those vehicles from the highway through a repurchase program or to force owners to release Fiat from liability resulting from the use of those vehicles. Fiat has intentionally avoided its section 151 obligations, and is attempting to repurchase the model 124 for amounts far below the retail value of the vehicles, so that, should the agency issue an order to recall and remedy, a large portion of the affected vehicles will have been repurchased, and thus outside the parameters of the statutory campaign.

Section 152 Finding

The final determination that a safety-related defect exists in the model 124 due to undercarriage corrosion is based primarily on an exceptionally large number of consumer complaints, and the manufacturer's repurchase activities following the suspension in March of the model 124 finding.

Fiat has asserted that the Agency cannot issue a finding of a safety-related defect due to undercarriage corrosion in the model 124. This assertion is based on the following arguments: (1) that the agency cannot establish a significant number of failures in the model 124 by using a comparative analysis of the complaint rate on the model 850 to the complaint rate on the model 124; (2) that the model 124 was manufactured in accordance with the "state of the art" at the time of manufacture; (3) that the agency in conducting the instant investigation is engaging in impermissible rulemaking by promulgating a safety standard in the context of a defect proceeding; (4) that the "alleged" defect does not relate to motor vehicle safety because no accidents or injuries were reported as of June, 1979; (5) that owners have adequate warning of a failure because rust is easily seen and progresses slowly; and (6) that the agency is bound by its actions in two earlier cases involving corrosion and is further bound by its statements in the June investigative summary on the model 124, which, in Fiat's view, contains deficiencies.

Failure Rate: During the March negotiations, Fiat demonstrated to the Agency through a presentation consisting of statistical charts and assembly plant diagrams, that the model 850 had a significant number of failures attributable to poor treatment of metal in assembly and that the model 124 did not and would not have such problems. The agency's willingness to suspend the model 124 finding was based in large measure on the strength of this

[11] Transcript: Fiat rust Investigation, August 6, 1979, p. 78–79, 119–124, and Exhibit 8.

[12] Appendix C, *The Alleged "Repurchase Campaign of the Model 124".*

statistical showing. The failure rate on the 1970–71 model 850 as of March 16, 1979, was .27%. Now, however, it appears that the failure rate of the model 124, to be inferred from the rate on consumer complaints, exceeds that of the model 850 at the time of the March negotiations. The agency has received or has knowledge of 399 complaints on the 1970–74 model 124 which specifically indicate undercarriage corrosion. The vehicle population is approximately 133,700, yielding a failure rate of .29%. Fiat now denies that it ever acknowledged that the failure rate of the model 850 was significant,[13] and argues that the agency cannot use a comparison of the rates for both models to establish a significant number of failures among model 124s. The documents submitted by Fiat in March of 1979 clearly contradict this assertion. Moreover, at that time Fiat demonstrated to the agency through a comparative analysis of the apparent failure rates that the problem in the model 850 exceeded the agency's preliminary findings.

The State of the Art: Fiat raises the argument that its model 124 vehicles are manufactured consistently with the state of the art of rust prevention and therefore cannot be found to be defective. The model 128, 850 and 124 are manufactured with unit body type construction, referred to as unibody or monocoque construction. The underbody and chassis frame are a single welded unit to which various steering and suspension components are attached. There are other manufacturers who also use this type frame or chassis in their automobile products.

The investigation of the model 124 and 850 was initiated after Fiat called attention to an undercarriage corrosion problem in the model 128 by recalling that model, and the agency began receiving complaints which described a similar problem in the model 850 and 124. These complaints were more numerous than complaints of structural corrosion received on comparable vehicles. This observation, coupled with the knowledge of the prior model 128 recall campaign for similar problems, led the agency to inquire further into the problem complained of on the model 850 and 124.

The agency's findings concerning the model 124 are based on specific facts which are unique to the investigation and the manufacturer and vehicles involved. In reinstating the initial determination on the model 124, and in making this final determination, the agency has relied primarily on the large number of owner complaints compared to the number of model 124 vehicles produced, and on Fiat's repurchase actions and Fiat's statements to owners. This investigation is not an examination of unibody construction in vehicles generally, nor would the agency contend that unibody frames in general are defective. Fiat's argument that the vehicles were manufactured in accordance with the state of the art does not disprove or nullify the evidence before this agency that the 1970–74 model 124 contains a defect which relates to motor vehicle safety.

Impermissible Rulemaking: Fiat argues that if the agency should find that structural rust and corrosion in 1970–74 model 124 vehicles constitutes a defect related to motor vehicle safety, this determination would be, in and of itself, a new safety standard promulgated improperly in the guise of an adjudicatory proceeding. Fiat further states that the agency cannot make a finding of a defect until a safety standard specifying "useful life of an automobile" has been adopted through the process of regular rulemaking.

If Fiat's argument were valid, the defect remedy provisions of the Act would be rendered inoperative, and the more than 60 million vehicles recalled for safety related defects since the passage of the Act would not have been recalled. For each defect determination necessarily implies the recognition of some "standard" as much as does the present standard regarding excessive rust and corrosion of critical components.

The agency, in administering the Safety Act, cannot treat the matter as solely one for rulemaking and thereby disregard apparent defects which might be found in vehicles made by individual manufacturers. Whenever a defect condition exists among an identifiable group of vehicles made by one manufacturer, and the condition poses an unreasonable risk, it is the agency's statutory duty to act.

In section 152 of the Act, 15 U.S.C. 1412, Congress recognized the need for the agency to act on defects which it might not be able to define with a limited number of standards. That section provides that the agency may conduct an investigation to determine whether a Federal motor vehicle safety standard has been violated, or to determine, as in the instant proceeding, whether there is a defect related to motor vehicle safety. These are independent, not interdependent investigations. Nowhere in the section or the Act is there any language that would lend itself to the interpretation used by Fiat that, in order for the agency to act, there must be a defect related to motor vehicle safety *and* the defect must also violate an established Federal motor vehicle safety standard.

The issue of a defect determination has been addressed at length by the courts, whose interpretations of the Act demonstrate the lack of validity of Fiat's contention that safety issues must be dealt with exclusively in a rulemaking framework.[14] It is further demonstrated in case law that structural components designed to function without repair or replacement for the life of the vehicle, such as the vehicle's undercarriage and frame, do not require the existence of a safety standard specifically relating to the defect at issue. The determination of the defect depends on particular facts and circumstances which must be examined, as they arise, on a case by case basis.[15]

No Accidents or Injuries: There is strong authority for the proposition that the agency, in establishing the existence of a safety-related defect, does not have to show that actual injuries or accidents have occurred, only that the possibility of an injury or accident can reasonably be inferred from the nature of the component involved.[16] The following language taken from Fiat's notification letter issued to consumers in the model 850 recall campaign succinctly states the effects that undercarriage corrosion can have on the safe operation of the vehicle: "A safety-related defect exists in that there is a possibility that either the suspension systems or the steering system and/or the floor pan where the seats are attached may separate from the undercarriage. Separation would result from an advanced state of corrosion in the undercarriage. Any such separation would cause impairment of handling of the vehicle and, therefore, present a risk of vehicle crash without prior warning."

The failure mode in the model 850 described above is identical to the failure mode in the model 124. Owner complaints for both the model 850 and model 124 have described failures resulting from underbody corrosion which clearly interfere with the safe operation of the vehicles. In one report, the area beneath the driver's seat was corroded to such an extent that it collapsed while the car was in operation causing the driver to lose control of the car and hit a fence. One owner, involved

[13] *Alleged Excessive Frame and Underbody Corrosion on 1970 through 1974 Model 124 Fiat Vehicles Imported by Fiat Motors of North America, Inc. ("FMNA"),* p. 20. (C7–30, Ex 33).

[14] *U.S. v. General Motors Corp.* (Wheels) 518 F.2d 420 (D.C. Circuit, 1975); *U.S. v. General Motors Corp.* (Pittman Arm) 561 F.2d 923 (D.C. Circuit, 1977).

[15] *Wheels* at 438.

[16] Pittman Arm at 929, (Levanthal, J. dissenting).

in a collision accident on a freeway, stated that the accident could have been avoided had the emergency brake on the car operated properly. Its failure to stop the vehicle was due to corrosion in the underbody area where the brake was installed. There have been reports of vehicle loss of control resulting from failure of corroded control arms or suspension mounts in the underbody, and reports of jack points rusting through and collapsing while the car was on the jack.

Prior Adequate Warning: The complaints submitted to this agency and the testimony received at the hearing October 3, refute Fiat's position that there is sufficient warning to the owner of the presence of undercarriage corrosion. The manufacturer's inspection procedures involve placing the car on a lift and tapping the frame in critical areas of the undercarriage with a chipping hammer. If there is a dull thud, or the sound of falling particles, the car is deemed structurally corroded.[17] In some instances, owners stated that holes were bored through the vehicle substructures in order to ascertain the degree or presence of the rust. These procedures indicate that the presence of corrosion is not easily ascertained.

The average car owner does not inspect the undercarriage of the car. Whatever rust was viewable on the undercarriage is not in view to the owner. In addition, one owner stated he was shocked to see the car's condition as it was revealed by the inspection procedures. The photographs of some of these same owners' vehicles submitted at the hearing exhibit well-cared for cars with no signs of exterior rust.

Further evidence refuting that there is prior adequate warning is found in materials submitted by the manufacturer during the course of the investigation wherein Fiat stated that the rusting process generally occurs from the inside of the affected structures outward. Thus, a car could have interior corrosion damage prior to its becoming visible in the exterior of the undercarriage.

Prior Decisions and Findings: Upon issuing notice of an initial determination of a defect, Section 152 of the Act requires that the agency must provide the manufacturer with the information on which that determination is based. In many instances, the information is summarized in a report by the Office of Defects Investigation engineer assigned to the case. The manufacturer and others are then afforded the opportunity to present data, views and arguments with respect to that information. Fiat, in analyzing the information furnished by the agency raised a number of objections to and has based certain arguments upon statements and conclusions in the investigative summary. Fiat contends that the agency is bound by those statements and conclusions, and that if such findings are dispproven in some detail, or if they appear to support Fiat's position, the agency cannot proceed with a final determination. Fait misconstrues the purpose of the report and the weight to be accorded it in this essentially investigative proceeding.

The agency's only purpose here is to determine as accurately as possible whether a vehicle defect poses an unreasonable risk to safety. If, in the manufacturer's opinion, the deficiencies are vital to the issue of the defect finding, the Act entities the manufacturer to challenge the agency's findings in a federal district court and requires the agency to prove the existence of a defect.[18]

Fiat also states that the agency is bound by observations made by agency employees which Fiat has culled from earlier investigative cases in which vehicle corrosion was examined but no agency action was taken. Fiat has requested the agency to consider such material from two particular cases in conjunction with its model 124 deliberations.[19]

In these two cases, one involving corrosion of a brake system component in school buses and the other involving corrosion in the frames of certain General Motors vehicles, the agency made no determinations or decisions. The lack of agency action in these cases is not to be confused with determinations that no defects were present, and the statements of individual agency employees are not to be confused with fact findings of the agency. These statements were nothing more than observations and opinions made by agency employees in a deliberative process which was never concluded. The agency does not have authority to adopt any such statements as binding procedents, and to do so would be contrary to the purposes of the Safety Act.

In any event, I have reviewed the facts and analysis of both earlier investigative cases discussed by Fiat, and I have concluded that no controlling principle or factual observation found in either case file is contrary to the determination made here. General statements found in consumer advisory press releases issued during those investigations described the susceptibility of all vehicles to rust and the effect of road salt on the rust and corrosion process. Such generally statements might remain true, but obviously they would not justify agency inaction where critical structural components of vehicles of a certain model are found to rust prematurely and excessively and where this condition poses an unreasonable risk of accident.

Conclusion

In accordance with its statutory authority under sections 152 and 156, (15 U.S.C. 1412, 1416) the agency hereby notifies Fiat of its finding that a defect which relates to motor vehicle safety exists in the 1970–74 model 124 due to excessive undercarriage corrosion of critical structural components, the failure of which may result in loss of vehicle control. Further, the agency orders the manufacturer to correct the non-statutory recall it is pesently conducting on the 1970–74 model 124 in the following manner:

(1) to issue notification letters to all owners or purchasers of 1970–74 model 124 vehicles, presently or formerly involved in or subject to the campaign;

(2) to issue notification letters to all remaining owners or purchasers of the subject vehicles;

(3) all notification letters are subject to final approval by the agency;

(4) to provide a reasonable remedy to 1971–74 model 124 owners or purchasers in accordance with section 154 of the Act;

(5) where the vehicle is to be repurchased, the following repurchase procedure is to be used.

Step 1. For 1972–74 models, obtain from both the *Red Book*, published by National Market Reports, current for January 1, 1979, and the N.A.D.A. Book ("Blue Book") published by the National Automobile Dealers Association, current for January 1, 1979, the average retail price of the comparable 1972 model, using the version of the books which are applicable to the particular region in which the owner resides.

Step 2. Average the two prices.

Step 3. For the 1971 model vehicles, take 80% of the value for the comparable 1972 model 124 found by averaging.

Step 4. Subtract repair costs for substantial collision body damage from the amount arrived at in Steps 2 or 3, whichever is applicable.

The amount arrived at after Step 4 is then to be used as the basic guideline for owner negotiations.

As there are always vehicles which are in extraordinarily good or poor condition (safety-related rust and corrosion to be excluded) certain flexibility on the manufacturer's part is expected when dealing with such vehicles.

[17] *Recall Campaign Ref. No. 125, 850 Spyders and Racers, May, 1979*, p. 3–6.

[18] 15 U.S.C. 1399, 1415.

[19] Investigations C2–21, and C2–25.

With regard to mileage on 1971 vehicles, unless the mileage exceeds 100,000 miles, mileage would not be deemed to extraordinarily depreciate a vehicle. However, mileage of less than 50,000 miles should reflect a premium value.

(6) In addition, the manufacturer cannot refuse to repurchase a vehicle solely on the basis of length of ownership of the vehicle. Where the manufacturer refuses to repurchase a vehicle found to be structurally corroded, the manufacturer must submit to the agency in writing within fourteen days of its refusal, the reasons for refusal. If the agency determines that the manufacturer has wrongfully refused to repurchase the vehicle, the manufacturer must negotiate a price for the vehicle in accordance with the repurchase procedures in item (3), and must offer to repurchase the vehicle for the negotiated amount.

(7) The manufacturer must submit to the agency on a monthly basis, the following information:

# of offers to repurchase vehicles
# of offers accepted, listing the amount of each offer
# of offers registered, listing the amount of each offer
# of vehicles repaired

For each offer and repair listed, state the name, address and phone number of the owner.

(8) Where the manufacturer repurchases the vehicle, reimbursement to the owner is to be made simultaneously with the owner's surrendering the vehicle to the manufacturer for salvage. Repurchase must occur within thirty days after the inspection procedure is completed.

III. Ruling on Petition for Inconsequentiality

Fiat has petitioned the agency to be exempted from the notification and remedy requirements of the Act, in the event the agency issues an order pursuant to section 152 of the Act, 15 U.S.C. 1412, requiring Fiat to recall and remedy the 1970–74 model 124 vehicles. The basis of the petition is that the defect is inconsequential as it relates to motor vehicle safety because no collision accidents or injuries have been attributed to the defect and owners have adequate prior warning of the existence of the defect.

Notice of receipt of the petition was published in the **Federal Register** on October 18, 1979 (44 FR 60193) and an opportunity afforded for comment. No comments were received on the petition.

The arguments presented in the petition were raised by Fiat in their presentation October 3, and in their supplemental materials submitted October 17 in responding to the issue of whether a defect relating to motor vehicle safety existed in the subject vehicles. Those arguments were considered during the agency's deliberations and have been addressed in the above decision regarding the model 124. The agency finds that Fiat has failed to meet its burden of persuasion in establishing that the defect is one that does not relate to motor vehicle safety or that it is inconsequential. The petition is hereby denied.

Notice of the denial of the petition and the agency's findings and order regarding the 1971 model 850 and the 1970–74 model 124 will be published in the **Federal Register** in accordance with sections 157 and 158 of the Act, 15 U.S.C. 1417 and 1418.

(Sec. 102 and 103, Pub. L. 93–492, 88 Stat. 1470 (15 U.S.C. 1417 and 1418); delegations of authority at 49 CFR 1.50 and 49 CFR 501.8)

Issued on January 4, 1980.

Joan Claybrook,

Administrator, National Highway Traffic Safety Administration.

[FR Doc. 80-683 Filed 1-4-80; 4:31 pm]
BILLING CODE 4910-59-M

[Docket No. 79-15; Notice 4]

Heavy Truck Safety Panel; Public Meeting

AGENCY: National Highway Traffic Safety Administration. This notice reschedules a public meeting that was announced in the December 13, 1979 **Federal Register** of the Heavy Truck Safety Panel in Room 2230 of the Department of Transportation Headquarters (Nassif) Building. The meeting will begin at 9:00 a.m. on February 19, 1980. The purpose of this meeting is to review the problems, issues, and possible actions in the area of truck safety that were presented to the panel at a Heavy Truck Safety Meeting held on September 10 and 11, 1979, and to recommend a set of priority actions for the Government, manufacturers, carriers, and unions. The panel is comprised of representatives of the Government, manufacturers, carriers and labor organizations. The public is invited to attend this meeting of the panel as observers but only limited space for 75 is available.

FOR FURTHER INFORMATION CONTACT: Mr. Anees Adil, Crash Avoidance Division, National Highway Traffic Safety Administration, 400 Seventh Street, SW., Washington, D.C. 20590 (202–426–2715).

(Secs. 103, 112, 119, Pub. L. 89–563, 80 Stat. 718 (15 U.S.C. 1392, 1401, 1407); delegations of authority at 49 CFR 1.50 and 501.8)

Issued on January 7, 1980.

Michael M. Finkelstein,

Associate Administrator for Rulemaking.

[FR Doc. 80-767 Filed 1-9-80; 8:45 am]
BILLING CODE 4910-59-M

Safety, Bumper, and Consumer Information Programs; Public Meetings

Note—This document originally appeared in the **Federal Register** for January 8, 1980. It is reprinted in this issue to meet requirements for publication on an assigned day of the week. (See CFR notice 41 FR 32914, August 6, 1976.)

The National Highway Traffic Safety Administration (NHTSA) will hold a meeting on January 23, 1980, to answer questions from the public and industry regarding the Agency's safety, bumper, and consumer information programs. The meeting will begin at 10:30 a.m., run until 1:00 p.m., and reconvene at 2:00 p.m., if necessary. It will be held in Conference Room 2230 of the Department of Transportation Headquarters Building, 400 Seventh Street, SW., Washington, D.C.

At the January meeting, representatives of DOT will answer questions received in writing from the industry and the public relating to NHTSA's vehicle safety, bumper, or consumer information programs which are technical, interpretative or procedural in nature. The questions may relate to the research and development, rulemaking, or enforcement (including defects) phases of these activities. (Questions regarding the Agency's fuel economy program will continue to be addressed at the EPA's meetings on vehicle emissions.)

Questions for the January 23 meeting must be submitted in writing by January 18 to Michael M. Finkelstein, Associate Administrator for Rulemaking, Room 5401, 400 Seventh Street, SW., Washington, D.C. 20590. Every effort will be made to answer appropriate questions received. Questions received after the January 18 date may be answered at the meeting if sufficient time is available. The individual, group, or company submitting a question does not have to be present for the question to be answered. A consolidated list of questions submitted by January 18 will be available at the meeting and this list will serve as the agenda.

A transcript of the meeting will be available for public inspection in the NHTSA Technical Reference Section in Washington, D.C., within four weeks after the meeting. Copies of the transcript will be availabe in four or five

weeks at twenty-five cents for the first page and five cents for each additional page (length has varied from 100 to 150 pages) upon request to NHTSA, Technical Reference Section, Room 5108, 400 Seventh Street, SW., Washington, D.C. 20590.

Issued in Washington, D.C. on January 7, 1980.

Michael M. Finkelstein,

Associate Administrator for Rulemaking.

[FR Doc. 80-762 Filed 1-9-80; 8:45 am]

BILLING CODE 4910-59-M

DEPARTMENT OF THE TREASURY

Office of the Secretary

United States, Trinidad and Tobago To Discuss Income Tax Treaty

The Treasury Department announced today that representatives of the United States and Trinidad and Tobago have recently concluded exploratory talks in Washington with a view to beginning negotiations on amendments to the present income tax treaty between the two countries. Trinidad and Tobago initiated the exploratory meeting to discuss some of the problems in the scope and administration of the present income tax treaty which was ratified in 1970 and remains in force. It is expected that negotiations will resume in Trinidad and Tobago early in 1980.

The Treasury invites persons wishing to submit comments concerning problems under the present treaty or to suggest changes to write to H. David Rosenbloom, International Tax Counsel, U.S. Treasury, Room 3064, Washington, D.C. 20220.

Dated: January 4, 1980.

Donald C. Lubick,

Assistant Secretary (Tax Policy).

[FR Doc. 80-754 Filed 1-9-80; 8:45 am]

BILLING CODE 4810-25-M

United States and Tunisia; Discussion of Income Tax Treaty

The Treasury Department today announced that representatives of the United States and the Republic of Tunisia will meet in Tunis during the week of February 4, 1980, to undertake negotiations of a bilateral treaty to avoid double taxation of income.

There is no income tax treaty now in effect between the United States and Tunisia. Prior negotiations took place in September 1975, and a preliminary review of the issues to be covered was undertaken at that time. After preliminary discussions in May 1979, the Government of Tunisia recently invited the United States to send a delegation to Tunisia to resume the negotiations.

The negotiations are expected to be based on the draft texts exchanged in 1975, the model texts published by the United States and by the Organization for Economic Cooperation & Development (OECD) in 1977, and the income tax treaty between the United States and Morocco, which was signed in August 1977 and has been submitted to the Senate for approval prior to ratification. The issues to be discussed will include the taxation by each country of income derived there by residents of the other country, whether from business activity, personal services or investment, as well as assurances of nondiscrimination in tax matters and provisions for administrative cooperation between the tax authorities of the two countries.

Interested persons are invited to send written comments and suggestions concerning the forthcoming negotiations to H. David Rosenbloom, International Tax Counsel, U.S. Treasury, Room 3064, Washington, D.C. 20220.

Dated: January 7, 1980.

Donald C. Lubick,

Assistant Secretary (Tax Policy).

[FR Doc. 80-791 Filed 1-9-80; 8:45 am]

BILLING CODE 4810-25-M

INTERSTATE COMMERCE COMMISSION

Permanent Authority Decisions; Decision-Notice

The following applications, filed on or after March 1, 1979, are governed by Special Rule 247 of the Commission's *Rules of Practice* (49 CFR 1100.247). These rules provide, among other things, that a petition for intervention, either in support of or in opposition to the granting of an application, must be filed with the Commission within 30 days after the date notice of the application is published in the **Federal Register**. Protests (such as were allowed to filings prior to March 1, 1979) *will be rejected.* A petition for intervention without leave must comply with Rule 247(k) which requires petitioner to demonstrate that it (1) Holds operating authority permitting performance of any of the service which the applicant seeks authority to perform, (2) has the necessary equipment and facilities for performing that service, and (3) has performed service within the scope of the application either (a) for those supporting the application, or, (b) where the service is not limited to the facilities of particular shippers, from and to, or between, any of the involved points.

Persons unable to intervene under Rule 247(k) may file a petition for leave to intervene under Rule 247(l) setting forth the specific grounds upon which it is made, including a detailed statement of petitioner's interest, the particular facts, matters, and things relied upon, including the extent, if any, to which petitioner (a) Has solicited the traffic or business of those supporting the application, or, (b) where the identity of those supporting the application is not included in the published application notice, has solicited traffic or business identical to any part of that sought by applicant within the affected marketplace. The Commission will also consider (a) The nature and extent of the property, financial, or other interest of the petitioner, (b) the effect of the decision which may be rendered upon petitioner's interest, (c) the availability of other means by which the petitioner's interest might be protected, (d) the extent to which petitioner's interest will be represented by other parties, (e) the extent to which petitioner's participation may reasonably be expected to assist in the development of a sound record, and (f) the extent to which participation by the petitioner would broaden the issues or delay the proceeding.

Petitions not in reasonable compliance with the requirements of the rule may be rejected. An original and one copy of the petition to intervene shall be filed with the Commission indicating the specific rule under which the petition to intervene is being filed, and a copy shall be served concurrently upon applicant's representative, or upon applicant if no representative is named.

Section 247(f) provides, in part, that an applicant which does not intend to timely prosecute its application shall promptly request that it be dismissed, and that failure to prosecute an application under the procedures of the Commission will result in its dismissal.

If an applicant has introduced rates as an issue it is noted. Upon request, an applicant must provide a copy of the tentative rate schedule to any protestant.

Further processing steps will be by Commission notice, decision, or letter which will be served on each party of record. *Broadening amendments will not be accepted after the date of this publication.*

Any authority granted may reflect administrative acceptable restrictive amendments to the service proposed below. Some of the applications may have been modified to conform to the Commission's policy of simplifying grants of operating authority.

Findings: With the exception of those applications involving duly noted

problems (e.g., unresolved common control, unresolved fitness questions, and jurisdictional problems) we find, preliminarily, that each common carrier applicant has demonstrated that its proposed service is required by the present and future public convenience and necessity, and that each contract carrier applicant qualifies as a contract carrier and its proposed contract carrier service will be consistent with the public interest and the transportation policy of 49 U.S.C. 10101. Each applicant is fit, willing, and able properly to perform the service proposed and to conform to the requirements of Title 49, Subtitle IV, United States Code, and the Commission's regulation. Except where specifically noted, this decision is neither a major Federal action significantly affecting the quality of the human environment nor a major regulatory action under the Energy Policy and Conservation Act of 1975.

In those proceedings containing a statement or note that dual operations are or may be involved we find, preliminarily and in the absence of the issue being raised by a petitioner, that the proposed dual operations are consistent with the public interest and the transportation policy of 49 U.S.C. 10101 subject to the right of the Commission, which is expressly reserved, to impose such terms, conditions or limitations as it finds necessary to insure that applicant's operations shall conform to the provisions of 49 U.S.C. 10930(a) [formerly section 210 of the Interstate Commerce Act].

In the absence of legally sufficient petitions for intervention, filed within 30 days of publication of this decision-notice (or, if the application later becomes unopposed), appropriate authority will be issued to each applicant (except those with duly noted problems) upon compliance with certain requirements which will be set forth in a notification of effectiveness of the decision-notice. To the extent that the authority sought below may duplicate an applicant's other authority, such duplication shall be construed as conferring only a single operating right.

Applicants must comply with all specific conditions set forth in the following decision-notices within 30 days after publication, or the application shall stand denied.

Note.—All applications are for authority to operate as a common carrier, by motor vehicle, in interstate or foreign commerce, over irregular routes, except as otherwise noted.

Volume No. 248

Decided: December 17, 1979.

By the Commission, Review Board Number 3, Members Parker, Fortier and Hill.

MC 730 (Sub-445F), filed June 4, 1979. Applicant: PACIFIC INTERMOUNTAIN EXPRESS CO., 25 No. Via Monte, Walnut Creek, CA 94596. Representative: Edgar E. Reddick (same address as applicant). Transporting (1) *iron pipe, iron pipe fittings, plastic pipe, plastic pipe fittings,* and (2) *materials, equipment, and supplies* used in the manufacture of the commodities in (1) above, between the facilities of Charlotte Pipe and Foundry Co., at or near Charlotte and Bakers, NC, on the one hand, and, on the other, points in AL, AR, CT, DE, FL, GA, IL, IN, IA, KS, KY, LA, ME, MD, MA, MI, MN, MO, MS, NE, NH, NJ, NY, NC, ND, OH, OK, PA, RI, SC, SD, TN, TX, VT, VA, WV, WI, and DC. (Hearing site: Charlotte, NC, or Atlanta, GA.)

MC 890 (Sub-2F), filed June 4, 1979. Applicant: ADKINS TRUCKING AND FREIGHT LINES, INC., 7235 Boulevard Ave., Pennsauken, NJ 08110. Representative: Robert B. Einhorn, 3220 PSFS Building, 12 So. 12th St., Philadelphia, PA 19107. Transporting (1) *pulpboard, fiberboard, and pulpboard and fiberboard containers,* from Philadelphia, Port Providence, North Wales, and Lansdale, PA, to New York City, NY, points in NJ and Nassau and Suffolk Counties, NY, and (2) *boxes, machinery parts, and materials and equipment* used in the manufacture of boxes, from New York City, NY, points in NJ and Nassau and Suffolk Counties, NY, to Philadelphia and Port Providence, PA. (Hearing site: Camden, NJ and Philadelphia, PA.)

MC 890 (Sub-3F), filed June 4, 1979. Applicant: ADKINS TRUCKING AND FREIGHT LINES, INC., 7235 Boulevard Ave., Pennsauken, NJ 08110. Representative: Robert B. Einhorn, 3220 P.S.F.S. Building, 12 South 12th St., Philadelphia, PA 19107. Transporting (1) *foodstuff, bakery goods, and animal, fish, and poultry feed,* (except commodities in bulk), from Camden and Pennsauken, NJ, to New York City and points in Nassau and Suffolk Counties, NY, and (2) *materials, equipment, and supplies* used in the manufacture of foodstuffs and bakery goods, from New York City and points in Nassau and Suffolk Counties, NY, to Camden, NJ. (Hearing site: Camden, NJ and Philadelphia, PA.)

MC 2900 (Sub-384F), filed May 30, 1979. Applicant: RYDER TRUCK LINES, INC., Ranger Division, 2050 Kings Road, P.O. Box 2408–R, Jacksonville, FL 32203. Representative: John Carter (same address as applicant). Transporting (1) *radiator cores, air conditioning, and ice-making and heat exchange machinery,* and (2) *materials, equipment, and supplies* used in the manufacture of the commodities in (1) above, from the facilities McQuay-Perfex, Inc., at or near (a) Spirit Lake, Vinton, and Washington, IA, (b) Louisville, KY, (c) Faribault, MN, (d) Grenada, MS, and (e) Milwaukee and Berlin, WI, to points in the United States (except AK and HI), and (3) *materials, equipment, and supplies* used in the manufacture of the commodities in (1) above, in the reverse direction, restricted in (1), (2), and (3) above to the transportation of traffic originating at named origins and destined to the indicated destinations. (Hearing site: Minneapolis, MN.)

MC 65660 (Sub-15F), filed May 16, 1979. Applicant: WARNER & SMITH MOTOR FREIGHT, INC., 66 Third St. Masury, OH 44438. Representative: C. R. Johnson (same address as applicant). To operate as a *common carrier,* by motor vehicle, in interstate or foreign commerce, over regular routes, transporting *general commodities* (except those of unusual value, classes A and B explosives, household goods as defined by the Commission, commodities in bulk, and those requiring special equipment), serving Medina, OH, as an off-route point in connection with applicant's otherwise authorized regular-route operations. (Hearing site: Cleveland, OH, or Washington, DC.)

MC 82841 (Sub-278F), filed June 4, 1979. Applicant: HUNT TRANSPORTATION, INC., 10770 "I" St. Omaha, NE 68127. Representative: Donald L. Stern, 610 Xerox Bldg., 7171 Mercy Road, Omaha, NE 68106. Transporting *fabricated metal products,* from the facilities of United States Gypsum Company, at (a) Pinckneyville, IL, and (b) Warren, OH, to those points in the United States in and west of MN, IA, MO, AR, and LA (except AK and HI). (Hearing site: Chicago, IL.)

MC 102401 (Sub-23F), filed March 15, 1979. Applicant: TAYLOR HEAVY HAULING, INC., 20601 W. Ireland Rd. South Bend, IN 46614. Representative: Alki E. Scopelitis, 1301 Merchants Plaza, Indianapolis, IN 46204. Transporting *machinery and steel shot,* from the facilities of Wheelabrator-Frye, Inc., at Mishawaka, IN, to those points in the United States in and east of MN, IA, MO, AR, and TX (except IN). (Hearing site: Indianapolis IN, or Chicago, IL.)

MC 110420 (Sub-823F), filed June 11, 1979. Applicant: QUALITY CARRIERS, INC., P.O. Box 186, Pleasant Prairie, WI 53158. Representative: John R. Sims, Jr., 915 Pennsyvania Bldg., 425 13th St. NW., Washington, DC 20004. Transporting *petroleum products,* as described in

Appendix XIII to the report in *Descriptions in Motor Carrier Certificates*, 61 M.C.C. 209, in bulk, in tank vehicles, from Congo, WV, to points in CO, IL, IA, KS, MI, MN, MO, NE, ND, SD, WI, and WY. (Hearing site: Washington, DC.)

MC 117820 (Sub-33F), filed May 18, 1979. Applicant: AURELIA TRUCKING CO., a corporation, 2121 Petit Ave., Port Huron, MI 48060. Representative: Robert D. Schuler, 100 West Long Lake Road, Suite 102, Bloomfield Hills, MI 48013. Transporting (1) *auto body parts and trim*, from the facilities of Inmont Corporation, at Port Huron, MI, to those points in the United States in and east of KS, OK, ND, NE, SD, and TX, and (2) *materials and supplies* used in the manufacture of the commodities in (1) above, in the reverse direction, restricted in (1) and (2) above to the transportation of traffic originating at the indicated origins and destined to the indicated destinations. (Hearing site: Port Huron, MI.)

MC 119670 (Sub-40F), filed March 12, 1979. Applicant: THE VICTOR TRANSIT CORPORATION, 5250 Este Ave., Cincinnati, OH 45232. Representative: Robert H. Kinker, 314 W. Main St., P.O. Box 464, Frankfort, KY 40602. Transporting (1) *paper and paper products* (except building and roofing paper), from Miamisburg, OH, to points in IL, IN, the lower peninsula of MI, those points in NY on and west of U.S. Hwy 15, those points in PA on and west of a line extending along U.S. Hwy 15 from the NY-PA State line to the PA-MD State line, those points in WI on, south and east of a line extending west along U.S. Hwy 18 from Lake Michigan to junction U.S. Hwy 14, then along U.S. Hwy 14 to junction U.S. Hwy 51, then along U.S. Hwy 51 to the WI-IL State line, and those in Jefferson, Kenton, Campbell, Mason, and Boyd Counties, KY, Cabel, Kanawha, Wood, Ohio, Brooke, and Hancock Counties, WV, and St. Louis County, MO, and (2) *materials, equipment, and supplies* used in the manufacture of paper and paper products, in the reverse direction. (Hearing site: Cincinnati, OH.)

MC 121450 (Sub-11F), filed June 11, 1979. Applicant: McCOMAS TRUCK LINES, INC., 604 N. Second St., Chickasha, OK 73018. Representative: G. Timothy Armstrong, 200 North Choctaw, P.O. Box 24, El Reno, OK 73036. To operate as a *common carrier*, by motor vehicle, in interstate or foreign commerce, over regular routes, transporting *general commodities* (except those of unusual value, classes A and B explosives, household goods as defined by the Commission, commodities in bulk, and those requiring special equipment), (1) between Chickasha, OK, and junction OK Hwy 7 and U.S. Hwy 81, from Chickasha over U.S. Hwy 277 to junction OK Hwy 7, then over OK Hwy 7 to junction U.S. Hwy 81 and return over the same route, serving all intermediate points, (2) between Chickasha, and Rush Springs, OK, from Chickasha over U.S. Hwy 62 to junction U.S. Hwy 277, then over U.S. Hwy 277 to junction OK Hwy 17, then over OK Hwy 17 to Rush Springs and return over the same route, serving all intermediate points, (3) between Sterling, OK and junction OK Hwy 65 and U.S. Hwy 70, over OK Hwy 65, serving all intermediate points, (4) between Randlett and Waurika, OK, over U.S. Hwy 70, serving all intermediate points, (5) between Wichita Falls, TX and Waurika, OK, from Wichita Falls over TX Hwy 79 to junction OK Hwy 79 at TX-OK boundary line, then over OK Hwy 79 to junction U.S. Hwy 70, then over U.S. Hwy 70 to Waurika, OK, and return over the same route, serving all intermediate points, (6) between Terral, OK and junction TX Hwy 240 and U.S. Hwy 277, from Terral over U.S. Hwy 81 to junction U.S. Hwy 82, then over U.S. Hwy 82 to junction U.S. Hwy 287, then over U.S. Hwy 287 to junction TX Hwy 25, then over TX Hwy 25 to junction TX Hwy 240, then over TX Hwy 240 to junction U.S. Hwy 277, and return over the same route, serving all intermediate points. (Hearing site: Oklahoma City, OK.)

MC 127730 (Sub-4F), filed June 13, 1979. Applicant: A.A.A. CARTAGE, INC., 5938 South 13th St., Milwaukee, WI 53221. Representative: Rolfe E. Hanson, 121 West Doty St., Madison, WI 53703. Transporting (1) *general commodities* (except those of unusual value, classes A and B explosives, household goods as defined by the Commission, commodities in bulk, and those requiring special equipment, and (2) empty containers, between Hartford, WI, on the one hand, and, on the other, Milwaukee, WI, and Chicago, IL, restricted in (1) above to the transportation of traffic having an immediately prior or subsequent movement by rail or water. (Hearing site: Milwaukee or Madison, WI.)

MC 129480 (Sub-41 F), filed May 29, 1979. Applicant: TRI-LINE EXPRESSWAYS, LTD., 550 71st Ave., S. E., Calgary, Alberta, Canada T2H OS6. Representative: Richard S. Mandelson, 1600 Lincoln Center Bldg., 1660 Lincoln St., Denver, CO 80204. Transporting (1) *agricultural machinery and implements*, (2) *tractors*, (3) *industrial construction, excavating, and material handling equipment*, (4) *cargo trailers*, and (5) *parts, components, and accessories* for the commodities in (1), (2), (3), and (4) above, from Bettendorf, Burlington, Des Moines, Griswold, and Pella, IA, Oregon, IL, Terre Haute, IN, Harper, KS, Joplin, MO, Owatonna, MN, Fargo, ND, Madison, SD, Midland, PA, and Racine, WI, to points on the international boundary line between the United States and Canada. (Hearing site: Des Moines, IA.)

MC 129830 (Sub-11F), filed April 26, 1979. Applicant: JACOBSMA TRANSPORTATION, INC., 2600 Highway 75 North, Sioux City, IA 51105. Representative: Edward A. O'Donnell, 1004 29th St., Sioux City, IA 51104. Transporting (1) *hides*, from Sioux City and Hospers, IA, to points in IL, MN, and WI, and (2) *empty containers, trailers, and container chassis*, in the reverse direction, restricted to the transportation of traffic having a prior or subsequent movement by rail or water, or originating at the named origin and destined to the indicated destinations (except traffic moving in foreign commerce). (Hearing site: Sioux City, IA.)

MC 136511 (Sub-66F), filed June 13, 1979. Applicant: VIRGINIA APPALACHIAN LUMBER CORP., 9640 Timberlake Road, Lynchburg, VA 24502. Representative: E. Stephen Heisley, 805 McLachlen Bank Bldg., 666 Eleventh St., N. W., Washington, DC 20001. Transporting (1) *chemicals, compounds, solvents, paints, lacquer, varnish, gum, resins, plastic liquids, plastic sheeting, defoaming compounds, ink, pallets, and containers*, and (2) *equipment* used in the manufacture and distribution of the commodities in (1) above, (except commodities in bulk), (a) between points in Orange County, CA, on the one hand, and, on the other, points in the United States (except AK and HI), and (b) from Moss Points, MS, to points in the United States (except AK and HI).

MC 136640 (Sub-15F), filed June 13, 1979. Applicant: ROBERT L. ALLEN, d.b.a. R. ALLEN TRANSPORT, P.O. Box 456, Pocomoke City, MD 21851. Representative: S. Michael Richards, P.O. Box 225, Webster, NY 14580. To operate as a *contract carrier*, by motor vehicle, in interstate or foreign commerce, over irregular routes, transporting *canned citrus beverages, citrus sections, canned fruit, and fruit drinks*, from Orlando, FL, to points in CT, IN, KY, MD, MA, NJ, OH, PA, RI, VA, WV, and DC, under continuing contract(s) with Southern Fruit Distributors, Inc., of Orlando, FL. (Hearing site: Washington, DC.)

MC 141961 (Sub-4F), filed May 21, 1979. Applicant: CARMAN CARRIER, INC., P.O. Box 2139, Clarksville, IN 47130. Representative: Donald W. Smith, P.O. Box 40248, Indianapolis, IN 46240.

Transporting (1) *construction and furniture paneling,* from the facilities of (a) Universal Woods, Inc., at Louisville, KY, and (b) J. L. Gilbert Co., Inc., at Sellersburg, IN, to points in the United States (except AK and HI), and (2) *materials and equipment* used in the manufacture of construction and furniture paneling, in the reverse direction. (Hearing site: Louisville, KY, or Indianapolis, IN.)

MC 143671 (Sub-2F), filed June 2, 1979. Applicant: BILL BLANN, d.b.a. BLANN TRACTOR CO., P.O. Box 557, Hampton, AR 71744. Representative: James M. Duckett, 927 Pyramid Life Bldg., Little Rock, AR 72201. To operate as a *contract carrier,* by motor vehicle, in interstate or foreign commerce, over irregular routes, transporting (1) *clothing,* and (2) *materials, equipment and supplies* used in the manufacture of clothing, between the facilities of M. J. Industries, Inc., at (a) St. Louis, MO and (b) East Camden, AR, under continuing contract(s) with M. J. Industries, Inc., of St. Louis, Mo. (Hearing site: Little Rock, AR.)

MC 144751 (Sub-1F), filed May 16, 1979. Applicant: RONALD D. WILSON AND RHONDA WILSON d.b.a. CARRIAGE MOBILE HOME SALES, 2821 West Third St., Elk City, OK 73644. Representative: Wilburn L. Williamson, Suite 615-East, The Oil Center, 2601 Northwest Expressway, Oklahoma City, OK 73112. Transporting (1) *mobile homes and portable buildings,* and (2) *materials, equipment, and supplies* used in the distribution and installation of the commodities in (1) above, between points in AR, KS, LA, MO, NM, OK, and TX. (Hearing site: Oklahoma City, OK.)

MC 145470 (Sub-3F), filed May 21, 1979. Applicant: ALL FREIGHT SYSTEMS, INC., 1026 South 10th St., Kansas City, KS 66105. Representative: Donald J. Quinn, 1012 Baltimore, Suite 900, Kansas City, MO 64105. To operate as a *contract carrier,* by motor vehicle, in interstate or foreign commerce, over irregular routes, transporting *printed paper forms and printed pads,* and *materials, equipment, and supplies* used in the manufacture and distribution of printed checks, deposit tickets, and printed forms, under continuing contract(s) with Deluxe Check Printers, Inc., of St. Paul, MN. (Hearing site: Kansas City, MO, or St. Paul, MN.)

MC 147101 (Sub-2F), filed June 11, 1979. Applicant: L D F, INC., 30 Enterprise Ave., Secaucus, NJ 07094. Representative: J. A. Kundtz, 1100 National City Bank Bldg., Cleveland, OH 44114. To operate as a *contract carrier,* by motor vehicle, in interstate or foreign commerce, ove irregular routes, transporting *foodstuffs,* in vehicles equipped with mechanical refrigeration, from Charlotte, NC, to points in GA, VA, and SC, and those points in TN on and east of Hwy 127, under continuing contracts with (1) The Nestle Company, Inc., of White Plains, NY, and (2) Piedmont Distribution Centers, of Charlotte, NC. NOTE: The person or persons who appear to be engaged in common control must either file an application under 49 U.S.C. § 11343(a) [formerly section 5(2) of the Interstate Commerce Act], or submit an affidavit indicating why such approval is unnecessary. (Hearing site: Washington, DC.)

MC 147171F, filed May 3, 1979. Applicant: LLOYD J. JOHNSON and MARY J. JOHNSON d.b.a. WEGNER TRUCKING, 13005 Ingersoll Ave., Hugo, MN 55038. Representative: Lloyd J. Johnson (same address as applicant). To operate as a *contract carrier,* by motor vehicle, in interstate or foreign commerce, over irregular routes, transporting (1) *steel coils, riveted metal pipe, and corrugated steel sheets,* from Minneapolis MN, to Fargo, ND, and (2) *finished culverts,* from Fargo ND, to points in MN, under continuing contract(s) with H. V. Johnston Culvert Co., of Blaine, MN. (Hearing site: Minneapolis or St. Paul, MN.)

Volume No. 254

Decided: December 20, 1979.

By the Commission, Review Board Number 1, Members Carleton, Joyce and Jones.

MC 63417 (Sub-212F), filed May 31, 1979. Applicant: BLUE RIDGE TRANSFER CO., INC., P.O. Box 13447, Roanoke, VA 24034. Representative: William E. Bain (same address as applicant). Transporting (1) *plastic and paper products,* and (2) *materials, supplies and equipment* used in the manufacture and distribution of the commodities named in (1) above (except in bulk), between points in the United States (except AK and HI), restricted to the transportation of traffic originating at or destined to the facilities of the Continental Group, Inc. (Hearing site: Roanoke, VA, or Washington, DC.)

MC 113666 (Sub-178F), filed June 5, 1979. Applicant: FREEPORT TRANSPORT, INC., 1200 Butler Road, Freeport, PA 16229. Representative: R. Scott Mahood (same address as applicant). Transporting *steel,* from Pittsburgh, and New Kensington, PA, to Cincinnati, OH. (Hearing site: Pittsburgh, PA, or Washington, DC.)

MC 115557 (Sub-20F), filed May 31, 1979. Applicant: CHARLES A. McCAULEY, 308 Leasure Way, New Bethlehem, PA 16242. Representative: Henry M. Wick, Jr., 2310 Grant Bldg., Pittsburgh, PA 15219. Transporting (1)(a) *artificial Christmas trees, decorations and ornaments,* and (b) *equipment, materials and supplies* used in the manufacture and distribution of the commodities named in (1)(a), (2)(a) *plastic articles* and (b) *equipment, materials and supplies* used in the manufacture and distribution of the commodities named in (2)(a), between Lexington, KY, on the one hand, and, on the other, points in the United States, including AK, but excluding HI. (Hearing site: Lexington, KY, or Washington, DC.)

MC 119656 (Sub-59F), filed May 30, 1979. Applicant: NORTH EXPRESS, INC., 219 Main St., Winamac, IN 46996. Representative: Donald W. Smith, P.O. Box 40248, Indianapolis, IN 46240. Transporting (1) *wire products and springs,* (a) from Logansport, IN, to points in KY, IL, MI, OH, and IN, and (b) from Jackson, MI, to Belvidere, IL, and (2) *wire,* from E. Alton, IL, to Chelsea, MI, and Logansport, IN. (Hearing site: Detroit, MI.)

MC 119777 (Sub-383F), filed June 5, 1979, 1979. Applicant: LIGON SPECIALIZED HAULER, INC., Highway 85—East, Madisonville, KY 42431. Representative: Carl U. Hurst, P.O. Drawer "L" Madisonville, KY 42431. Transporting *iron and steel articles,* from Kansas City, MO, to points in the United States (except AK and HI). (Hearing site: Kansas City, MO.)

MC 123407 (Sub-581F), May 30, 1979. Applicant: SAWYER TRANSPORT, INC., Sawyer Center, Route 1, Chesterton, IN 46304. Representative: H. E. Miller, Jr. (same address as applicant). Transporting *lumber, lumber products, and wood products,* between points in AZ, CA, CO, MT, NM, ID, NV, OR, WA, UT, and WY. (Hearing site: Portland, OR, or San Francisco, CA.)

MC 126736 (Sub-123F), filed May 31, 1979. Applicant: FLORIDA ROCK AND TANK LINES, INC., 155 East 21st St., Jacksonville, FL 32206. Representative: L. H. Blow, P.O. Box 1559, Jacksonville, FL 32201. Transporting *silica sand,* in bulk, from points in Talbot County, GA to Jacksonville, FL. (Hearing site: Jacksonville, FL.)

MC 126736 (Sub-124F), filed June 6, 1979. Applicant: FLORIDA ROCK AND TANK LINES, INC., 155 East 21st Street, Jacksonville, FL 32206. Representative: L. H. Blow, P.O. Box 1559, Jacksonville,

FL 32201. Transporting *ferrous sulfate*, in bulk, from Baltimore, MD and South Amboy, NJ, to points in AL, FL, and GA. (Hearing site: Jacksonville, FL.)

MC 127187 (Sub-53F), filed June 6, 1979. Applicant: FLOYD DUENOW, INC., 1728 Industrial Park Blvd., P.O. Box 492, Fargo, ND 56537. Representative: James B. Hovland, 414 Gate City Building, P.O. Box 1680, Fargo, ND 58107. Transporting *agricultural chemicals* (except in bulk), between points in the United States (except AK and HI), restricted to the transportation of traffic originating at or destined to the facilities of the Monsanto Company. (Hearing site: Chicago, IL.)

MC 129387 (Sub-96F), filed June 5, 1979. Applicant: PAYNE TRANSPORTATION, INC., P.O. Box 1271, Huron, SD 57350. Representative: Charles E. Dye (same address as applicant). Transporting (1) *automobile accesssories*, (2) *home canning kits*, (3) *cleaning compounds*, (4) *plastic, metal, wooden and rubber articles*, and (5) *materials, equipment and supplies* used in the manufacture of commodities in (1), (2), (3) and (4), (a) between Huron, SD, and Minneapolis, MN, and (b) between Huron, SD, and Minneapolis, MN, on the one hand, and, on the other, points in the United States (except AK and HI), restricted to the transportation of traffic originating at or destined to the facilities of Mastermotive, Inc. (Hearing site: St. Paul, MN, or Chicago, IL.)

MC 133566 (Sub-139F), filed May 31, 1979. Applicant: GANGLOFF & DOWNHAM TRUCKING CO., INC., P.O. Box 479, Logansport, IN 46947. Representative: Thomas J. Beener, Suite 4959, One World Trade Center, New York, NY 10048. Transporting *pickles*, in containers, from the facilities of Pilgrim Farms, Inc. at or near Plymouth, IN, to points in NY, MA, PA, NJ, and MD. (Hearing site: New York, NY.)

MC 135797 (Sub-217F), filed May 23, 1979. Applicant: J. B. HUNT TRANSPORT, INC., P.O. Box 130, Lowell, AR 72745. Representative: Paul R. Bergant (same address as applicant). Transporting *new furniture, furniture parts, and materials* used in the manufacture of furniture, from the facilities of Samsonite Corp. Furniture Div. at (a) Ft. Smith, AR and (b) Murfreesboro, TN, to points in the United States (except AK and HI). (Hearing site: Washington, DC.)

MC 139906 (Sub-51F), filed May 29, 1979. Applicant: INTERSTATE CONTRACT CARRIER CORP., 2156 West 2200 South, P.O. Box 30303, Salt Lake City, UT 84125. Representative: Richard A. Peterson, 521 South 14th Street, Lincoln, NE 68501. Transporting *books*, from Colorado Springs, CO to Manchester, MO. (Hearing site: Lincoln, NE, or Salt Lake City, UT.)

Note.—Dual operations may be involved.

MC 140166 (Sub-13F), filed June 5, 1979. Applicant: JOHN L. SMITH, P.O. Box 186, Moreland, ID 83256. Representative: Dennis M. Olsen, 485 "E" Street, Idaho Falls, ID 83401. Transporting *animal feed*, between Pocatello, ID, on the one hand, and, on the other, points in OR, MT, WY, UT, NV, AZ, and CA. (Hearing site: Boise or Idaho Falls, ID.)

MC 140176 (Sub-19F), filed June 6, 1979. Applicant: POWELL TRUCKING CO., INC., Route 3, Box 13, Sumrall, MS 39482. Representative: Fred W. Johnson, Jr., 1500 Deposit Guaranty Plaza, P.O. Box 22628, Jackson, MS 39205. To operate as a *contract carrier*, by motor vehicle, over irregular routes, transporting *lumber and forest products*, from the facilities of Crown Zellerbach Corporation, at or near Joyce, Ponchatoula, Pine Grove, Bogalusa, and Powhatan, LA and Lumberton, MS, to points in AL, AR, FL, GA, IL, IN, IA, KS, KY, LA, MI, MN, MS, MO, NE, NJ, OH, OK, PA, SC, TN, TX, WV and WI, under continuing contract(s) with Crown Zellerbach Corporation of Bogalusa, LA. (Hearing site: Jackson, MS or New Orleans, LA.)

MC 143267 (Sub-75F), filed June 5, 1979. Applicant: CARLTON ENTERPRISES, INC., P.O. Box 520, Mantua, OH 44255. Representative: Neal A. Jackson, 1156 15th St., NW., Washington, DC 20005. Transporting *refractory products*, between the facilities of C–E Refractories Division of Combustion Engineering, Inc., at (1) Siloam, KY, on the one hand, and, on the other, points in CT, DE, IL, IN, MD, MI, MO, NJ, NY, OH, PA, VA and WV; (2) Aurora and Chicago Heights, IL, on the one hand, and, on the other, points in DE, KY, MD, MI, MO, NJ, NY, OH, PA, WV and those in IN on and south of Interstate Hwy 70; and (3) Vandalia, MO, on the one hand, and, on the other, points in DE, KY, MD, MI, NJ, NY, OH, PA, VA and WV. (Hearing site: Cleveland, OH, or Washington, DC.)

MC 144406 (Sub-1F), filed May 31, 1979. Applicant: PACKARD TRANSFER, INC., 253 Reeves Ave., Trenton, NJ 08610. Representative: Donald W. Smith, P.O. Box 40248, Indianapolis, IN 46240. Transporting *malt beverages*, from the facilities of Champale, Inc. at (a) Trenton, NJ and (b) Norfolk, VA, to points in AL, FL, GA, NC, SC, and VA. (Hearing site: Washington, DC.)

MC 147446F, filed May 30, 1979. Applicant: TOWN TRUCKING CO., a corporation, 1500 South Roslyn Road, Roselle, IL 60172. Representative: Albert A. Andrin, 180 North La Salle St., Chicago, IL 60601. Transporting (1) *building and construction materials*, from Chicago, and Wilmington, IL, to points in IN, IA, MI, MN, MO, and WI, restricted to the transportation of traffic originating at the named origins and destined to the indicated destinations, and (2) *materials and supplies* used in the manufacture of the commodities named in (1) above, from points in IN, IA, MI, MN, MO, and WI, to Chicago and Wilmington, IL, restricted to the transportation of traffic originating at the named origins and destined to the indicated destinations. (Hearing site: Chicago, IL, or Tampa, FL.)

Volume No. 256

Decided: December 20, 1979.

By the Commission, Review Board Number 3, Members Parker, Fortier and Hill.

MC 26396 (Sub-237F), filed March 14, 1979, and previously noticed in the **Federal Register** issue of August 21, 1979. Applicant: POPELKA TRUCKING CO. d.b.a. THE WAGGONERS, P.O. Box 990, Livingston, MI 59047. Representative: Bradford E. Kistler, P.O. Box 82028, Lincoln, NE 68501. To operate as a *common carrier*, by motor vehicle, in interstate or foreign commerce, over irregular routes, transporting *fireplace logs*, from the facilities or Northwest Forest Fuels, Inc., at or near Livingston, MT, to (1) points in AZ, CA, CO, FL, ID, IL, IA, IN, KS, MD, MO, MS, MN, NE, NM, NY, ND, OH, OR, WA, WI and WY, and (2) to ports of entry on the international boundary line between the United States and Canada located in MT. (Hearing site: Billings, MT.)

Note.—This republication is to reflect correctly the territorial description.

MC 41406 (Sub-135F), filed March 21, 1979, and previously noticed in the **Federal Register** issue of August 21, 1979. Applicant: ARTIM TRANSPORTATION SYSTEM, INC., 7105 Kennedy Ave., Hammond, IN 46323. Representative: Wade H. Bourdon (same address as applicant). Transporting *aluminum, zinc and lead articles*, between the facilities of U.S. Reduction Co. at Toledo, OH, Alton and Madison, IL, Gary, Hammond, and East Chicago, IN, Marietta, PA, and Russellville and Anniston, AL, on the one hand, and, on the other, those points in the United States in and east of ND, SD, NE, KS, OK, and TX. (Hearing site: Chicago, IL.)

Note.—This republication is to reflect correctly the territorial description.

MC 95876 (Sub-285F), filed May 29, 1979. Applicant: ANDERSON TRUCKING SERVICE, INC., 203 Cooper Ave. North, St. Cloud, MN 56301. Representative: Robert D. Gisvold, 1000 First National Bank Bldg., Minneapolis, MN 55402. Transporting *cast iron pipe, fittings, valves, hydrants and accessories therefor,* from the facilities of United States Pipe and Foundry Company at points in Hamilton County, TN and Jefferson County, AL, to points in CO, IL, IA, KS, MI, MN, MO, MT, NE, ND, OK, SD, TX, WI, and WY. (Hearing site: Birmingham, AL, or Minneapolis, MN.)

MC 102616 (Sub-997F), filed May 29, 1979. Applicant: COASTAL TANK LINES, INC., 250 North Cleveland-Massillon Rd., Akron, OH 44313. Representative: David F. McAllister (same address as applicant). Transporting *petroleum products,* in bulk, in tank vehicles, from Dayton, OH, to points in KY on and west of US Hwy 31W. (Hearing site: Chicago, IL, or Wasington, DC.)

MC 105566 (Sub-193F), filed May 31, 1979. Applicant: SAM TANKSLEY TRUCKING, INC., P.O. Box 1120, Cape Girardeau, MO 63701. Representative: Thomas F. Kilroy, Suite 406 Executive Bldg., 6901 Old Keene Mill Rd., Springfield, VA 22150. Transporting *chemicals* (except in bulk) and *personal safety devices,* from Bound Brook, NJ, Marietta, OH, and Willow Island, WV, to points in AZ, CA, CO, ID, MT, NV, NM, OR, UT, WA, and WY. (Hearing site: Washington, DC, or New York, NY.)

MC 114896 (Sub-75F), filed May 25, 1979. Applicant: PUROLATOR SECURITY, INC., 255 Old New Brunswick Road, Piscataway, NJ 08854. Representative: Carl T. Kessler (same address as applicant). To operate as a *Contract Carrier, by motor vehicle, in interstate or foreign commerce, over irregular routes, transporting new currency,* (1) From Washington, D.C. to Atlanta, GA; Baltimore, MD; Birmingham, AL; Boston, MA; Buffalo and New York, NY; Charlotte, NC; Chicago, IL; Cincinnati and Cleveland, OH; Culpeper and Richmond, VA; Dallas, El Paso, Houston, and San Antonio, TX; Denver, CO; Detroit, MI; Helena, MT; Jacksonville and Miami, FL; Kansas City and St. Louis, MO; Little Rock, AR; Louisville, KY; Memphis and Nashville, TN; Los Angeles and San Francisco, CA; Minneapolis, MN; New Orleans, LA; Oklahoma City, OK; Omaha, NE; Philadelphia and Pittsburgh, PA; Portland, OR; Salt Lake City, UT and Seattle, WA. and (2) From Culpeper, VA to Atlanta, GA; Baltimore, MD; Birmingham, Al; Boston, MA; Buffalo and New York, NY; Charlotte, NC; Chicago, IL; Cincinnati and Cleveland, OH; Dallas, El Paso, Houston, and San Antonio, TX; Denver, CO; Detroit, MI; Helena, MT; Jacksonville and Miami, FL; Kansas City and St. Louis, MO; Little Rock, AR; Louisville, KY; Memphis and Nashville, TN; Los Angeles and San Francisco, CA; Minneapolis, MN; New Orleans, LA; Oklahoma City, OK; Omaha, NE; Philadelphia and Pittsburgh, PA; Portland, OR; Richmond, VA; Salt Lake City, UT; Seattle, WA and Washington, DC, under continuing contract(s) with Board of Governors of the Federal Reserve System, Washington, D.C. (Hearing site: Washington, DC.)

MC 121607 (Sub-11F), filed April 9, 1979. Applicant: COLUMBIA-PACIFIC TRANSPORT CO., 208 North Gum St., P.O. Box 6407, Kennewick, WA 99336. Representative: Michael B. Crutcher, 2000 IBM Bldg., Seattle, WA 98101. Transporting (1) *general commodities* (except household goods as defined by the Commission, commodities of unusual value, and classes A and B explosives), in containers or trailers having a prior or subsequent movement by water or rail, between points in Benton, Franklin, Walla Walla, Columbia, Garfield, Asotin, Whitman, Adams, Grant, Yakima, Lincoln, and Spokane Counties, WA; Morrow, Umatilla, Wallowa, LaGrande, Baker, Sherman and Gilliam Counties, OR, and Kootenai, Benewah, Latah, and Nez Perce Counties, ID, (2) *empty used containers, used trailers, and used trailer chassis,* between the points described in (1) above, and (3) *foodstuffs,* in refrigerated containers, vans, or trailers having an immediately prior or subsequent movement by rail, between Hinkle, OR, Wheeler and Othello, WA, and points in the Counties named in (1) above. (Hearing site: Kennewick or Spokane, WA.)

Note.—Dual operations may be involved.

MC 124887 (Sub-87F), filed May 30, 1979. Applicant: SHELTON TRUCKING SERVICE, INC., Route 1, Box 230, Altha, FL 32421. Representative: Sol H. Proctor, 1101 Blackstone Bldg., Jacksonville, FL 32202. Transporting (1)(a) *hydraulic lifts and petroleum metering devices* and (b) *materials and supplies* used in the installation thereof from Greensboro, NC, to points in AL, FL, GA, LA, MS, SC, TN, TX, and VA, and (2) *materials* used in the manufacture of the commodities named in (1)(a) above, in the reverse direction. (Hearing site: Jacksonville or Tallahassee, FL.)

MC 124887 (Sub-88F), filed May 31, 1979. Applicant: SHELTON TRUCKING SERVICE, INC., Route 1, Box 230, Altha, FL 32421. Representative: Sol H. Proctor, 1101 Blackstone Bldg., Jacksonville, FL 32202. Transporting *iron and steel articles,* from Aberdeen, NC, to points in AL, FL, GA, LA, MS, SC, and TN. (Hearing site: Jacksonville or Tallahassee, FL.)

MC 126276 (Sub-204F), May 31, 1979. Applicant: FAST MOTOR SERVICE, INC., 9100 Plainfield Road, Brookfield, IL 60513. Representative: Albert A. Andrin, 180 North La Salle St., Chicago, IL 60601. To operate as a *contract carrier,* by motor vehicle, in interstate or foreign commerce, over irregular routes, transporting *bottle caps and closures,* from Milwaukee, WI, to those points in the United States in and east of MT, WY, CO, NM, and TX, under continuing contract(s) with Crown Cork & Seal Company, Inc. of Philadelphia, PA. (Hearing site: Chicago, IL.)

MC 135326 (Sub-19F), filed May 31, 1979. Applicant: SOUTHERN GULF TRANSPORT, INC., 4277 North Market St., P.O. Box 7959, Shreveport, LA 71107. Representative: Hugh T. Matthews, 2340 Fidelity Union Tower, Dallas, TX 75201. Transporting *posts, poles, and piling,* from the facilities of International Paper Company, at or near DeRidder, LA, to points in AR, OK, and TX. (Hearing site: Dallas, TX.)

MC 139906 (Sub-52F), filed May 29, 1979. Applicant: INTERSTATE CONTRACT CARRIER CORP., 2157 West 2200 South, P.O. Box 30303, Salt Lake City, UT 84125. Representative: Richard A. Peterson, 521 South 14th St., P.O. Box 81849, Lincoln, NE 68501. Transporting (1) *non-motorized vehicles, parts and accessories,* from Little Rock, AR to points in the United States (except AK, HI and AR); (2) *materials, parts and accessories* used in the manufacture of the commodities described in (1) above, between Little Rock, AR, and Olney, IL; (3) *internal combustion engines,* from Los Angeles, CA, to Olney, IL; (4) *non-motorized children's vehicles, and mopeds, parts and accessories,* from Olney, IL, to points in the United States (except AK, HI, and IL), and (5) *materials, parts and accessories* used in the manufacture of commodities described in (3) and (4) above, between Little Rock, AR and Olney, IL. (Hearing site: Lincoln, NE, or Salt Lake City, UT.)

Note.—Dual operations may be involved.

MC 139906 (Sub-53F), filed May 29, 1979. Applicant: INTERSTATE CONTRACT CARRIER CORP., 2156 West 2200 South, P.O. Box 30303, Salt Lake City, UT 84125. Representative: Richard A. Peterson, 521 South 14th St.,

P.O. Box 81849, Lincoln, NE 68501. Transporting *carbon black* in bags, from Borger, TX, to Cadillac, Grand Rapids, Morenci, Sandusky and White Cloud, MI. (Hearing site: Lincoln, or Salt Lake City, UT.)

Note.—Dual operations are involved.

MC 146247 (Sub-2F), filed May 31, 1979. Applicant: DELTA MOTOR EXPRESS, INC., 1309 Fifth St., NE, Washington, DC 20002. Representative: Neal A. Jackson, 1155 15th St., NW, Washington, DC 20005. Transporting (1) *bananas*, and (2) *agricultural commodities* otherwise exempt from regulation under 49 U.S.C. § 10526(a)(6) when transported in mixed shipments with bananas, from Baltimore, MD, Wilmington, DE, New York, NY, Charleston, SC, to points in DE, MD, NJ, NY, PA, VA, and WV, and DC. (Hearing site: Washington, DC.)

Volume No. 259

Decided: January 2, 1980.

By the Commission, Review Board Number 2, Members Boyle, Eaton, and Uberman.

MC 26396 (Sub-260F), filed June 6, 1979. Applicant: POPELKA TRUCKING CO., d.b.a. The Waggoners, P.O. Box 31357, Billings, MT 59107. Representative: Bradford E. Kistler, P.O. Box 82028, Lincoln, NE 68501. Transporting *steel buildings and steel grain bins*, (1) from Chicago, IL, Omaha, NE, and Jamestown, ND, to points in MT and WY; and (2) from the ports of entry on the international boundary line between the United States and Canada located in MT and ND, to points in MT and WY, restricted in (2) above to the transportation of traffic in foreign commerce only. (Hearing site: Billings, MT.)

MC 41406 (Sub-144F), filed June 6, 1979. Applicant: ARTIM TRANSPORTATION SYSTEM, INC., 8400 Westlake Drive, Merrillville, IN 46410. Representative: Wade H. Bourdon (same address as applicant). Transporting *automobile and truck parts and accessories*, from Dayton and Vandalia, OH, to Detroit, Flint, Lansing, Pontiac, and Warren, MI, Atlanta, GA, Arlington, TX, Baltimore, MD, Wilmington, DE, Tarrytown, NY, Linden, NJ, Kansas City and St. Louis, MO, and Janesville, WI. (Hearing site: Dayton, or Cincinnati, OH.)

MC 41406 (Sub-145F), filed June 6, 1979. Applicant: ARTIM TRANSPORTATION SYSTEM, INC., 8400 Westlake Drive, Merrillville, IN 46410. Representative: Wade H. Bourdon (same address as applicant). Transporting (1) (a) *iron and steel wood burning stoves, and* (b) *agricultural implements*, from the plantsites of Durham Lehr, Inc., and All Nighter Stove Works West, Inc., at Richmond, IN, to points in the United States (except AK and HI), and (2) materials, equipment and supplies, used in the manufacture of the commodities named in (1) above, in the reverse direction. (Hearing site: Indianapolis, IN, or Chicago, IL.)

MC 41406 (Sub-148F), filed June 7, 1979. Applicant: ARTIM TRANSPORTATION SYSTEM, INC., 8400 Westlake Drive, Merrillville, IN 46410. Representative: Wade H. Bourdon (same address as applicant). Transporting *iron and steel articles*, between Houston, TX, and Chicago, IL, on the one hand, and, on the other, points in the United States (except AK and HI). (Hearing site: Houston, TX or Chicago, IL.)

MC 41406 (Sub-149F), filed June 7, 1979. Applicant: ARTIM TRANSPORTATION SYSTEM, INC., 8400 Westlake Drive, Merrillville, IN 46410. Representative: Wade H. Bourdon (same address as applicant). Transporting *iron and steel articles*, from points in Ramsey County, MN, to those points in the United States in and east of ND, SD, NE, KS, OK, and TX. (Hearing site: Minneapolis or St. Paul, MN.)

MC 42487 (Sub-924F), filed June 7, 1979. Applicant: CONSOLIDATED FREIGHTWAYS CORPORATION OF DELAWARE, 175 Linfield Drive, Menlo Park, CA 94025. Representative: H. P. Strong, P.O. Box 3062, Portland, OR 97208. To operate as a *common carrier*, by motor vehicle, in interstate or foreign commerce, over regular routes, transporting *general commodities* (except those of unusual value, classes A and B explosives, household goods as defined by the Commission, commodities in bulk, and those requiring special equipment), between Fort Worth, TX, and Denver, CO: From Fort Worth over U.S. Hwy 287 to Childress, TX, then over U.S. Hwy 83 to Garden City, KS, then over U.S. Hwy 50 to Lamar, CO, then over U.S. Hwy 287 to junction Interstate Hwy 70 near Limon, CO, then over Interstate Hwy 70 to Denver, and return over the same route, as an alternate route for operating convenience only in connection with carrier's otherwise authorized regular-route operations, serving no intermediate points. (Hearing site: Dallas, TX, or Denver, CO.)

MC 45736 (Sub-58F), filed June 6, 1979. Applicant: GUIGNARD FREIGHT LINES, INC., P.O. Box 26067, Charlotte, NC 28213. Representative: Edward G. Villalon, 1032 Pennsylvania Bldg., Pennsylvania Avenue & 13th St., NW., Washington, DC 20004. Transporting (1) *paper and paper products*, and (2) *materials, equipment and supplies* used in the manufacture of the commodities in (1) above, between the facilities of Union Camp Corporation, at or near Savannah and Tifton, GA, on the one hand, and, on the other, points in FL. (Hearing site: Savannah, GA.)

MC 115826 (Sub-483F), filed June 7, 1979. Applicant: W. J. DIGBY, INC., 6015 East 58th Ave., Commerce City, CO 80022. Representative: Howard Gore (Same address as applicant). Transporting *such commodities* as are dealt in by (a) hardware, drug, discount, and department stores, and (b) supermarkets, (except foodstuffs and commodities in bulk), from the facilities of action Industries, Inc., at or near Cheswick, PA, to points in AL, AZ, CA, CO, FL, GA, IA, ID, IL, KS, MN, MS, NC, NE, NM, OR , SC, TN, TX, UT, WA, WI, and WY. (Hearing site: Denver, CO.)

MC 134286 (Sub-118F), filed June 7, 1979. Applicant: ILLINI EXPRESS, INC., P.O. Box 1564, Sioux City, IA 51102. Representative: Julie Humbert (same address as applicant). Transporting *frozen foodstuffs*, from the facilities of Continental Freezers of Illinois, at or near Chicago, IL, to points in CO, IN, IA, KS, KY, MI, MO, NE, and OH. (Hearing site: Chicago, IL, or Denver, CO.)

Note.—Dual operations may be involved.

MC 135797 (Sub-165F), filed June 8, 1979. Applicant: J. B. HUNT TRANSPORT, INC., P.O. Box 130, Lowell, AR 72745. Representative: Paul R. Bergant (Same address as applicant). Transporting (1) *aluminum and aluminum foil*, from Lebanon, PA, Terre Haute, IN, Richmond, VA, Sumter, SC, and San Jose, CA, to Fayetteville, AR; and (2) *aluminum trays*, from Fayetteville, AR, to Omaha, NE. (Hearing site: Washington, DC.)

MC 136786 (Sub-230F), filed June 7, 1979. Applicant: ROBCO TRANSPORTATION, INC., 4333 Park Ave., Des Moines, IA 50321. Representative: Stanley C. Olsen, Jr., 4601 Excelsior Blvd., Minneapolis, MN 55416. Transporting *meats, meat products and meat by-products, and articles distributed by meat-packing houses*, as described in Sections A and C of Appendix I to the report in *Descriptions in Motor Carrier Certificates*, 61 M.C.C. 209 and 766 (except hides and commodities in bulk), from the facilities of Swift & Co., at or near (a) Omaha, NE, and (b) Glenwood, Marshalltown, Des Moines, and Sioux City, IA, to points in AZ, CA, DE, MD, NV, NJ, NY, PA, VA, WV, and DC.

(Hearing site: Minneapolis, MN, or Chicago, IL.)

MC 141076 (Sub-27F), filed June 7, 1979. Applicant: ROGER MOTOR LINES, INC., R. D. #2, P.O. Box 388 D2 Hackettstown, NJ 07840. Representative: Eugene M. Malkin, Suite 6193, 5 World Trade Center, New York, NY 10040. Transporting *vegetable oil, vegetable shortening, and margarine,* (except commodities in bulk), from the facilities of Capital City Products Company, at or near Columbus, OH, to those points in NY on and south of Interstate Hwy 84, and those points in NJ on and north of NJ Hwy 33. (Hearing site: New York, NY.)

Note.—Dual operations may be involved.

MC 142096 (Sub-11F), filed June 7, 1979. Applicant: MILLER BROS. TRUCKING CO., INC., 4100 West Mitchell Street, Milwaukee, WI 53215. Representative: James A. Spiegel, Olde Towne Office Park, 6425 Odana Road, Madison, WI 53719. Transporting *containers,* between Milwaukee, WI, and Chicago, IL, restricted to the transportation of traffic originating at or destined to the facilities of W. B. Bottle Supply Co., Inc. (Hearing site: Milwaukee, WI.)

MC 146846 (Sub-1F), filed June 8, 1979. Applicant: LOUIS J. LANE, Box 148, Trego, WI 54888. Representative: Nancy J. Johnson, 103 East Washington, St., Crandon, WI 54520. Transporting *paper and paper products,* from Brokaw, WI, to points in CA, OR, and WA. (Hearing site: Minneapolis or St. Paul, MN.)

Volume No. 260

Decided: January 3, 1980.

By the Commission, Review Board Number 3, Members Parker, Forrier, and Hill.

MC 11207 (Sub-472F), filed March 21, 1979, and previously noticed in the **Federal Register** issues of August 21, 1979 and December 11, 1979. Applicant: DEATON, INC., 317 Avenue W, P.O. Box 938, Birmingham, AL 35201. Representative: Kim D. Mann, Suite 1010, 7101 Wisconsin Avenue, Washington, DC 20014. Transporting *metal articles* (except commodities in bulk) between the facilities of O'Neal Steel, Inc., at or near (a) Birmingham and Mobile, AL, (b) Little Rock, AR, (c) Jacksonville and Tampa, FL, (d) Atlanta, GA, (e) Lafayette, Monroe, and Shreveport, LA, (f) Jackson, MS, and (g) Chattanooga and Knoxville, TN, on the one hand, and, on the other, points in AL, AR, FL, GA, KY, LA, MD, MS, MO, NC, OK, SC, TN, TX, VA and WV.

Note.—Applicant indicates this authority could be tacked at Birmingham and Jackson with existing regular-route general commodities authority to perform through service between the base area herein and existing general commodities territory in MS, specified areas in Al, and by further tacking operations in Tishomingo County, MS, points in TN, AL, and AR. Applicant states no tacking is presently intended. This republication is to show Jackson, MS in lieu of Jackson, MN as a base radial point, and to include the tacking statement.

MC 26396 (Sub-252F), filed June 6, 1979. Applicant: POPELKA TRUCKING CO., d.b.a. The Waggoners, P.O. Box 31357, Billings, MT 59107. Representative: Bradford E. Kistler, P.O. Box 82028, Lincoln, NE 68501. Transporting, *crushed limestone,* from Valley, WA, to ports of entry on the international boundary line between the United States and Canada at points in MT, ID, and WA. (Hearing site: Billings, MT.)

MC 41406 (Sub-147F), filed June 6, 1979. Applicant: ARTIM TRANSPORTATION SYSTEM, INC., 8400 Westlake Drive, Merrillville, IN 46410. Representative: Wade H. Bourdon, 8400 Westlake Drive, Merrillville, IN 46410. Transporting *iron and steel articles,* from Beaumont, TX, to points in IL, IN, KY, MI, MO, TN, and WI. (Hearing site: Houston, TX, or Chicago, IL.)

MC 57697 (Sub-18F), filed June 6, 1979. Applicant: LESTER SMITH TRUCKING, INC., 2645 East 51st Avenue, Denver, CO 80216. Representative: David J. Lister, 3841 North Columbia Boulevard, P.O. Box 17039, Portland, OR 97217. Transporting (1)(a) *commodities* the transportation of which because of size or weight requires the use of special equipment, and (b) *machinery, parts,* and *contractors' materials and supplies*; (2) *self-propelled articles,* and *machinery, tools, parts and supplies* moving in connection with self-propelled articles; and (3) *metal and metal articles,* between points in MT, ND, SD, WY, ID, UT, CO, NE, MN and IA. (Hearing site: Denver, CO.)

MC 59457 (Sub-46F), filed June 5, 1979. Applicant: SORENSEN TRANSPORTATION COMPANY, INC., Old Amity Road, Bethany, CT 06525. Representative: Thomas W. Murrett, 342 North Main Street, West Hartford, CT 06117. Transporting (1) *ice cream, ice products, dairy products, frozen and refrigerated desserts,* and (2) *materials and supplies* used in the manufacture and distribution of the commodities named in (1) above, between Fort Wayne, IN, Pittsburgh, PA, Canton, OH, Baltimore, MD, Syracuse, NY, and Milford, DE, on the one hand, and, on the other, points in ME, NH, VT, MA, RI, CT, NY, PA, NJ, DE, and MD, restricted to the transportation of traffic originating at or destined to the facilities of Borden, Inc. (Hearing site: Hartford, CT or Columbus, OH.)

MC 105457 (Sub-97F), filed May 17, 1979, published in the **Federal Register** issue of November 16, 1979, and republished this issue. Applicant: THURSTON MOTOR LINES, INC., 600 Johnston Road, P. O. Box 10638, Charlotte, NC 28206. Representative: Roland Rice, Suite 501, Perpetual Building, 1111 E Street, NW, Washington, DC 20004. To operate as a *common carrier,* by motor vehicle, in interstate or foreign commerce, over regular routes, transporting *general commodities* (except those of unusual value, classes A and B explosives, household goods as defined by the Commission, commodities in bulk and those requiring special equipment), (1) between Memphis, TN and Natchez, MS over U.S. Hwy 61, (2) between Memphis, TN and McComb, MS (a) over U.S. Hwy 51 and (b) over Interstate Hwy 55, (3) between Clarksdale, MS and Gulfport, MS: From Clarksdale over U.S. Hwy 49 to junction U.S. Hwy 49E and 49W at or near Tutwiler, MS, then over U.S. Hwys 49E and 49W to junction U.S. Hwy 49 at or near Yazoo City, MS, then over U.S. Hwy 49 to Gulfport, and return over the same routes, (4) between Clarksdale, MS and Tupelo, MS over MS Hwy 6, (5) between Cleveland, MS and Houston, MS over MS Hwy 8, (6) between Houston, MS and Meridian, MS: From Houston over MS Hwy 15 to junction MS Hwy 19 at or near Philadelphia, MS, then over MS Hwy 19 to Meridian and return over the same routes, (7) between Greenville, MS and Columbus, MS over U.S. Hwy 82, (8) between Aberdeen, MS and Mobile, AL over U.S. Hwy 45, (9) between Okolona, MS and Brookville, MS over Alternate U.S. Hwy 45, (10) between Macon, MS and Durant, MS: From Macon over MS Hwy 14 to Kosciusko, MS, then over MS Hwy 12 to Durant, and return over the same route, (11) between Meridian, MS and Vicksburg, MS, (a) over U.S. Hwy 80 and (b) over Interstate Hwy 20, (12) between Memphis, TN and the Benton-Union County, MS line over U.S. Hwy 78, (13) between Gadsden, AL and junction U.S. Hwy 41 and U.S. Hwy 411, near Carterville, GA over U.S. Hwy 411, (14) between Chattanooga, TN and the MS–LA state line, (a) over U.S. Hwy 11, and (b) over Interstate Hwy 59, (15) between Jacksonville, FL and the LA–MS state line (a) over U.S. Hwy 90, and (b) over Interstate Hwy 10, (16) between Decatur, AL and (a) junction U.S. Hwy 31 and U.S. Hwy 64 near Pulaski, TN, over U.S. Hwy 31, and (b) junction Interstate Hwy 65 and U.S. Hwy 64, also near Pulaski,

TN, over Interstate Hwy 65, (17) between Nashville, TN and Mobile, AL: From Nashville over U.S. Hwy 31 to Columbia, TN, then over U.S. Hwy 43 to Mobile, and return over the same routes, (18) between Fayetteville, TN and Panama City, FL over U.S. Hwy 231, (19) between Columbus, MS and junction U.S. Hwys 82 and 17, near Midway, GA, over U.S. Hwy 82, (20) between Natchez, MS and Brunswick, GA over U.S. Hwy 84, (21) between Corinth, MS and Humboldt, TN: From Corinth over U.S. Hwy 45 to junction U.S. Hwy 45W, then over U.S. Hwy 45W to Humboldt, and return over the same routes, (22) between Cullman, AL and Mobile, AL (a) over U.S. Hwy 31 and (b) over Interstte Hwy 65, (23) between Vicksburg, MS and Savannah, GA over U.S. Hwy 80, (24) between Dothan, AL and Huntsville, AL over U.S. Hwy 431, (25) between Columbus, GA and Birmingham, AL over U.S. Hwy 280, (26) between Atlanta, GA and Montgomery, AL over Interstate Hwy 85, (27) between Atlanta, GA and the AL–MS state line: (a) from Atlanta over N.S. Hwy 78 to the AL–MS state line, and (b) from Atlanta over Interstate Hwy 20 to Birmingham, AL then over U.S. Hwy 78 to the AL–MS state line, and return over the same routes, (28) between Chattanooga, TN and Florence, AL over U.S. Hwy 72, (29) between Augusta, GA and Nettleton, MS over U.S. Hwy 278, (30) between Atlanta, GA and Pensacola, FL over U.S. Hwy 29, (31) between Cartersville, GA and Chattanooga, TN (a) over U.S. Hwy 41, and (b) over Interstate Hwy 75, (32) between Atlanta, GA and Miami, FL: (a) over U.S. Hwy 41 and (b) from Atlanta over Interstate Hwy 75 to Tampa, then over U.S. Hwy 41 to Miami, and return over the same routes, (33) between Cumming, GA and Sarasota, FL over U.S. Hwy 19, (34) between Athens, GA and West Palm Beach, FL: From Athens over U.S. Hwy 441 to Okeechobee, FL, then over U.S. Hwy 98 to West Palm Beach, and return over the same routes; (35) between Savannah, GA and Punta Gorda, FL over U.S. Hwy 17, (36) between Augusta, GA and Homestead, FL over U.S. Hwy 1, (37) between Savannah, GA and Miami, FL over Interstate Hwy 95, (38) between Daytona Beach, FL and Tampa, FL over Interstate Hwy 4, (39) between Sarasota, FL and Ft. Pierce, FL: From Sarasota over FL Hwy 72 to junction FL Hwy 70, then over FL Hwy 70 to Ft. Pierce, and return over the same routes; (40) between Chattanooga, TN and Miami, FL over U.S. Hwy 27, (41) between Allendale, SC and Bradenton, FL over U.S. Hwy 301, (42) between Clearwater, FL and Vero Beach, FL over FL Hwy 60, (43) between Titusville, FL and Weeki Wachee, FL over FL Hwy 50, (44) between Holly Hill, FL and Ocala, FL over FL Hwy 40, (45) between Bunnell, FL and Lake City, FL over FL Hwy 100, (46) between Brunswick, GA and Perry, Ga over U.S. Hwy 341, (47) between Columbus, Ga and junction U.S. Hwy 80 and U.S. Hwy 280, near Butchton, GA, over U.S. Hwy 280, (48) between Statesboro, Ga and Augusta, GA over U.S. Hwy 25, (49) between Bronson, FL and Gainesville, GA: From Bronson over Alternate U.S. Hwy 27 to Chiefland, FL, the over U.S. Hwy 129 to Gainesville, and return over the same routes, (50) between Perry, FL and Greenwood, SC over U.S. Hwy 221, (51) between Perry, FL and Pensacola, FL over U.S. Hwy 98, (52) between Nashville, TN and Louisville, KY (a) over U.S. Hwy 31W, and (b) over Interstate Hwy 65, (53) between Knoxville, TN and Louisville, KY: (a) from Knoxville over U.S. Hwy 25W to junction U.S. Hwy 25, then over U.S. Hwy 25 to Lexington, KY, then over U.S. Hwy 60 to Louisville, and return over the same routes, (b) From Knoxville over Interstate Hwy 75 to junction Interstate Hwy 64, then over Interstate Hwy 64 to Louisville, and return over the same routes, (54) between Elizabethtown, KY and Lexington, KY over U.S. Hwy 62, (55) serving all points in AL, FL, GA and MS as off-route points in connection with routes (1) through (51) above, (56) serving all points in Allen, Anderson, Barren, Bourbon, Bullitt, Butler, Clark, Edmonson, Fayette, Franklin, Hardin, Hart, Jefferson, Jessamine, Larue, Logan, Nelson, Oldham, Scott, Shelby, Simpson, Spencer, Warren, and Woodford Counties, KY and Clark, Floyd and Harrison Counties, IN as off-route points in connection with routes (52) through (54) above, (57) serving all intermediate points in (1) through (54) above. (Hearing site: Charlotte, NC and Birmingham, AL.)

Note.—Applicant states its intention to tack the authority herein with all other operating authority under No. MC–105457. The purpose of this republication is to show the correct territorial descriptions.

MC 110567 (Sub-15F), filed June 6, 1979. Applicant: SOONER TRANSPORT CORP., 666 Grand Avenue, Des Moines, IA 50309. Representative: E. Check, P.O. Box 855, Des Moines, IA 50304. Transporting *ink oil, in bulk,* in tank vehicles, from San Antonio, TX, to points in MI, IN, and MO. (Hearing site: Kansas City, MO, or Des Moines, IA.)

MC 112696 (Sub-64F), filed June 6, 1979. Applicant: HARTMANS, INCORP., P.O. Box 898, Harrisonburg, VA 22801. Representative: Lawrence E. Lindeman, 425 13th St., NW Suite 1032, Washington, DC 20004. Transporting *malt beverages and wine,* from Pabst, GA and Newark and Secaucus, NJ, to points in Rockingham County, VA. (Hearing site: Washington, DC.)

MC 128246 (Sub-46F), filed June 6, 1979. Applicant: SOUTHWEST TRUCK SERVICE, a corporation, P.O. Box AD, Watsonville, CA 95076. Representative: William F. King, Suite 400, Overlook Bldg., 6121 Lincolnia Road, Alexandria, VA 22312. To operate as a contract carrier, by motor vehicle, in interstate or foreign commerce over irregular routes, transporting (1) *foodstuffs,* (2) *such commodities as are dealt in by hotels, restaurants and food business houses,* and (3) *equipment, materials and supplies used in the conduct of such business (except commodities in bulk)* from the facilities of Lyons-Magnus and Wawona Frozen Foods at or near Clovis, CA, to points in AZ, AR, CO, ID, KS, LA, MN, MO, NE, NV, NM, ND, OK, OR, SD, TX, UT, WA and WI, under continuing contract(s) with Lyons-Magnus and Wawona Frozen Foods of Clovis, CA. (Hearing site: San Francisco or Fresno, CA.)

MC 145406 (Sub-42F), filed June 5, 1979. Applicant: MIDWEST EXPRESS, INC., 380 East Fourth Street, Dubuque, IA 52001. Representative: Richard A. Westley, 4506 Regent Street, Suite 100, Madison, WI 53705. Transporting *meats, meat products, meat byproducts and articles distributed by meat-packing houses* as defined in Sections A and C of Appendix I to the report in *Descriptions in Motor Carrier Certificates,* 61 M.C.C. 209 and 766 (except hides and commodities in bulk), from the facilities of Wilson Foods Corporation at or near Albert Lea, MN, Cedar Rapids, Cherokee, and Des Moines, IA, to points in OR and WA, restricted to the transportation of traffic originating at the above named origins and destined to the above named destinations. (Hearing site: Dallas, TX, or Kansas City, MO.)

MC 146466 (Sub-8F), filed June 6, 1979. Applicant: SUMMIT TRUCK LINES, LTD., Route 3, Pella, IA 50219. Representative: Robert R. Rydell, 1020 Savings and Loan Bldg., Des Moines, IA 50309. Transporting *meats, meat products, meat byproducts, and articles distributed by meat-packing houses,* as described in Sections A and C of Appendix I to the report in *Descriptions in Motor Carrier Certificates,* 61 M.C.C. 209 and 766 (except hides and commodities in bulk), from the facilities of Tama Meat Packing Corp., at Tama, IA, to points in CA, TN and Chicago, IL.

(Hearing site: Des Moines, IA, or Minneapolis, MN.)

MC 146797 (Sub-2F), filed June 6, 1979. Applicant: LAWRENCE SUMPTER d.b.a. SUMPTER EXPRESS, R #10 Box 463A, Columbus, IN 47201. Representative: Stephen M. Gentry, 1500 Main Street, Speedway, IN 46224. Transporting *plastic articles*, from the facilities of Amoco Container Company, at or near Seymour, IN, to points in CA. (Hearing site: Indianapolis, IN.)

Agatha L. Mergenovich,

Secretary.

[FR Doc. 80-753 Filed 1-9-80; 8:45 am]

BILLING CODE 7035-01-M

Fourth Section Applications for Relief

January 7, 1980.

These applications for long-and-short-haul relief have been filed with the I.C.C.

Protests are due at the I.C.C. within 15 days from the date of publication of this notice.

FSA No. 43785, Prudential Lines, Inc, No. 1, general commodities in marine type trailers or containers between U.S. Gulf and Pacific Coast ports and ports in the Mediterranean and Black Seas, the Sea of Marmara and Atlantic coast of Spain and Morocco via U.S. North and South Atlantic coast ports in its Tariff 300, ICC PGLU 300, effective January 31, 1980. Grounds for relief—water competition.

FSA No. 43786, Southwestern Freight Bureau, Agent, No. B-42, sheet steel, in carloads, from Brackenridge, Leechburg and West Leechburg, PA to Ft. Smith, AR in Supplement 464 to its Tariff ICC SWFB 4850, effective February 8, 1980. Grounds for relief—market competition.

By the Commission.

Agatha L. Mergenovich,

Secretary.

[FR Doc. 80-748 Filed 1-9-80; 8:45 am]

BILLING CODE 7035-01-M

[Docket No. AB-84 (Sub-5F)]

Illinois Terminal Railroad Co. Abandonment Near Carlinville, Ill.; Findings

Notice is hereby given pursuant to 49 U.S.C. 10903 that by a Certificate and Decision decided December 19, 1979, a finding, which is administratively final, was made by the Commission, Review Board Number 5, stating that, subject to the conditions for the protection of railway employees prescribed by the Commission in *Oregon Short Line R. Co.-Abandonment Goshen*, 360 I.C.C. 91 (1979), the present and future public convenience and necessity permit the abandonment by the Illinois Terminal Railroad Company of a line of railroad known as the Carlinville Branch extending from railroad milepost 53.07 to milepost 59.31 near Carlinville, IL, a distance of 6.24 miles, in Macoupin County, IL. A certificate of public convenience and necessity permitting abandonment was issued to the Illinois Terminal Railroad Company. Since no investigation was instituted, the requirement of § 1121.38(a) of the Regulations that publication of notice of abandonment decisions in the **Federal Register** be made only after such a decision becomes administratively final was waived.

Upon receipt by the carrier of an actual offer of financial assistance, the carrier shall make available to the offeror the records, accounts, appraisals, working papers, and other documents used in preparing Exhibit I (§ 1121.45 of the Regulations). Such documents shall be made available during regular business hours at a time and place mutually agreeable to the parties.

The offer must be filed and served no later than 15 days after publication of this Notice. The offer, as filed, shall contain information required pursuant to § 1121.38(b) (2) and (3) of the Regulations. If no such offer is received, the certificate of public convenience and necessity authorizing abandonment shall become effective 45 days from the date of this publication.

Agatha L. Mergenovich,

Secretary.

[FR Doc. 80-750 Filed 1-9-80; 8:45 am]

BILLING CODE 7035-01-M

[Docket No. AB-84 (Sub-4F)]

Illinois Terminal Railroad Co. Abandonment Between Decatur and Forsyth, Ill.; Findings

Notice is hereby given pursuant to 49 U.S.C. 10903 that by a Certificate and Decision decided December 19, 1979, a finding, which is administratively final, was made by the Commission, Review Board Number 5, stating that, subject to the conditions for the protection of railway employees prescribed by the Commission in *Oregon Short Line R. Co.-Abandonment Goshen*, 360 I.C.C. 91(1979), the present and future public convenience and necessity permit the abandonment by the Illinois Terminal Railroad Company of a line of railroad known as the Forsyth Branch extending from railroad milepost 2.5 to milepost 7.0 near Forsyth, IL, a distance of 4.5 miles, in Macon County, IL. A certificate of public convenience and necessity permitting abandonment was issued to the Illinois Terminal Railroad Company. Since no investigation was instituted, the requirement of § 1121.38(a) of the Regulations that publication of notice of abandonment decisions in the **Federal Register** be made only after such a decision becomes administratively final was waived.

Upon receipt by the carrier of an actual offer of financial assistance, the carrier shall make available to the offeror the records, accounts, appraisals, working papers, and other documents used in preparing Exhibit I (§ 1121.45 of the Regulations). Such documents shall be made available during regular business hours at a time and place mutually agreeable to the parties.

The offer must be filed and served no later than 15 days after publication of this Notice. The offer, as filed, shall contain information required pursuant to § 1121.38(b) (2) and (3) of the Regulations. If no such offer is received, the certificate of public convenience and necessity authorizing abandonment shall become effective 45 days from the date of this publication.

Agatha L. Mergenovich,

Secretary.

[FR Doc. 80-749 Filed 1-9-80; 8:45 am]

BILLING CODE 7035-01-M

[Docket No. AB-84 (Sub-3F)]

Illinois Terminal Railroad Co. Abandonment Near Springfield, Ill.; Findings

Notice is hereby given pursuant to 49 U.S.C. 10903 that by a Certificate and Decision decided December 19, 1979, a finding, which is administratively final, was made by the Commission, Review Board Number 5, stating that, subject to the conditions for the protection of railway employees prescribed by the Commission in *Oregon Short Line R. Co.-Abandonment Goshen*, 360 I.C.C. 91 (1979), the present and future public convenience and necessity permit the abandonment by the Illinois Terminal Railroad Company of a line of railroad known at the Springfield Belt Line extending from railroad milepost 1.84 to milepost 4.90 near Springfield, IL, a distance of 3.06 miles, in Sangamon County, IL. A certificate of public convenience and necessity permitting abandonment was issued to the Illinois Terminal Railroad Company. Since no investigation was instituted, the requirement of § 1121.38(a) of the Regulations that publication of notice of abandonment decisions in the **Federal Register** be made only after such a decision becomes administratively final was waived.

Upon receipt by the carrier of an actual offer of financial assistance, the carrier shall make available to the offeror the records, accounts, appraisals, working papers, and other documents used in preparing Exhibit I (§ 1121.45 of the Regulations). Such documents shall be made available during regular business hours at a time and place mutually agreeable to the parties.

The offer must be filed and served no later than 15 days after publication of this Notice. The offer, as filed, shall contain information required pursuant to § 1121.38(b) (2) and (3) of the Regulations. If no such offer is received, the certificate of public convenience and necessity authorizing abandonment shall become effective 45 days from the date of this publication.

Agatha L. Mergenovich,

Secretary.

[FR Doc. 80-752 Filed 1-9-80; 8:45 am]

BILLING CODE 7035-01-M

[Docket No. AB-26 (Sub-20F)]

Live Oak, Perry & South Georgia Railway Co., Abandonment Between Foley Junction and Slade, Fla.; Findings

Notice is hereby given pursuant to 49 U.S.C. 10903 that by a Certificate and Decision decided December 19, 1979, a finding, which is administratively final, was made by the Commission, Review Board Number 5, stating that, subject to the conditions for the protection of railway employees prescribed by the Commission in *Oregon Short Line R. Co.-Abandonment Goshen,* 360 I.C.C. 91 (1979), the present and future public convenience and necessity permit the abandonment by the Live Oak, Perry & South Georgia Railway Company of its line of railroad extending from railroad milepost 39.54-LO at Foley Junction, FL, to milepost 2.66-LO at Slade, FL, and from milepost 1.51-LO to milepost 1.0-LO within Slade, FL, a distance of approximately 37.4 miles, in Taylor, Lafayette, and Suwanee Counties, FL. A certificate of public convenience and necessity permitting abandonment was issued to the Live Oak, Perry & South Georgia Railway Company. Since no investigation was instituted, the requirement of § 1121.38(a) of the Regulations that publication of notice of abandonment of decisions in the Federal Register be made only after such a decision becomes administratively final was waived.

Upon receipt by the carrier of an actual offer of financial assistance, the carrier shall make available to the offeror the records, accounts, appraisals, working papers, and other documents used in preparing Exhibit I (§ 1121.45 of the Regulations). Such documents shall be made available during regular business hours at a time and place mutually agreeable to the parties.

The offer must be filed and served no later than 15 days after publication of this Notice. The Offer, as filed, shall contain information required pursuant to § 1121.38(b)(2) and (3) of the Regulations. If no such offer is received, the certificate of public convenience and necessity authorizing abandonment shall become effective 45 days from the date of this publication.

Agatha L. Mergenovich,

Secretary.

[FR Doc. 80-751 Filed 1-9-80; 8:45 am]

BILLING CODE 7035-01-M

Permanent Authority Applications

The following applications seek approval to consolidate, purchase, merge, lease operating rights and properties, or acquire control of motor carriers pursuant to 49 U.S.C. 11343 or 11344. Also, applications directly related to these motor finance applications (such as conversions, gateway eliminations, and securities issuances) may be involved.

The applications are governed by Special Rule 240 of the Commission's Rules of Practice (49 1100.240). These rules provide, among other things, that opposition to the granting of an application must be filed with the Commission within 30 days after the date of notice of filing of the application is published in the **Federal Register.** Failure seasonably to oppose will be construed as a waiver of opposition and participation in the proceeding. Opposition under these rules should comply with Rule 240(c) of the Rules of Practice which requires that it set forth specifically the grounds upon which it is made, and specify with particularity the facts, matters and things relied upon, but shall not include issues or allegations phrased generally. Opposition not in reasonable compliance with the requirements of the rules may be rejected. The original and one copy of any protest shall be filed with the Commission, and a copy shall also be served upon applicant's representative or applicant if no representative is named. If the protest includes a request for oral hearing, the request shall meet the requirements of Rule 240(c)(4) of the special rules and shall include the certification required.

Section 240(e) further provides, in part, that an applicant who does not intend timely to prosecute its application shall promptly request its dismissal.

Further processing steps will be by Commission notice or order which will be served on each party of record. *Broadening amendments will not be accepted after the date of this publication except for good cause shown.*

Any authority granted may reflect administratively acceptable restrictive amendments to the transaction proposed. Some of the applications may have been modified to conform with Commission policy.

We find with the exception of those applications involving impediments (e.g., jurisdictional problems, unresolved fitness questions, questions involving possible unlawful control, or improper divisions of operating rights) that each applicant has demonstrated, in accordance with the applicable provisions of 49 U.S.C. 11301, 11302, 11343, 11344, and 11349, and with the Commission's rules and regulations, that the proposed transaction should be authorized as stated below. Except where specifically noted this decision is neither a major Federal action significantly affecting the quality of the human environment nor does it appear to qualify as a major regulatory action under the Energy Policy and Conservation Act of 1975.

In those proceedings containing a statement or note that dual operations are or may be involved we find, preliminarily and in the absence of the issue being raised by a protestant, that the proposed dual operations are consistent with the public interest and the national transportation policy subject to the right of the Commission, which is expressly reserved, to impose such conditions as it finds necessary to insure that applicant's operations shall conform to the provisions of 49 U.S.C. 10930.

In the absence of legally sufficient protests as to the finance application *or* any application directly related thereto filed within 30 days of publication (or, if the application later becomes unopposed), appropriate authority will be issued to each applicant (except those with impediments) upon compliance with certain requirements which will be set forth in a notification of effectiveness of this decision-notice. To the extent that the authority sought below may duplicate an applicant's existing authority, the duplication shall not be construed as conferring more than a single operating right.

Applicant(s) must comply with all conditions set forth in the grant or grants of authority within the time period specified in the notice of effectiveness of this decision-notice, or

the application of a non-complying applicant shall stand denied.

Dated: January 3, 1980.

By the Commission, Review Board Number 5, Members Krock, Pohost, and Taylor.

Agatha L. Mergenovich,
Secretary.

MC-F-14224F, filed November 23, 1979. JAMES B. SWING AND ARLENE L. SWING (320 Northside Drive, Lexington, NC 27292), Continuance in Control—SWING TRANSPORT (Swing) AND CONTRACT TRANSPORT, INC. (Contract) (P.O. Box 190, Lexington, NC 27292). Representative: Joseph W. Eason, P.O. Box 2058, Raleigh, NC 27602. James B. Swing and Arlene L. Swing seek to continue in control of contract upon the institution by Contract of operation, in interstate or foreign commerce, as a motor contract carrier. They are sole shareholders and directors of Swing and Contract. The corporation also share common officers. Swing holds authority pursuant to its permit in MC 115176 (Sub-1), to operate as a motor contract carrier in interstate or foreign commerce. Contract pursuant to the approval conditionally granted in MC 144792 (Sub-1F), was authorized to receive permit to operate in interstate or foreign commerce, as a motor carrier, over irregular routes, in the transportation of *aluminum cans*, between points in NC, under continuing contract(s) with Reynolds Metals Company of Richmond, VA. (Hearing site: Charlotte or Raleigh, NC.)

Note.—An application for temporary authority has been filed.

MC-F-14238, filed November 29, 1979. SUNDERMAN TRANSFER, INC. (Sunderman) (Box 63, Windon, MN, 56101)—Purchase (Portion)—DAKOTA EXPRESS, INC. (Dakota) (550 East 5th Street South, South St. Paul, MN 55075. Sunderman seeks to purchase a portion of the operating rights of Dakota. Eugene Sunderman and I. E. Sunderman who jointly control Sunderman through equal stock ownership, seek to acquire control of the rights through the transaction. Representative: Carl E. Munson, 469 Fischer Building, Dubuque, IA 52001. The interstate operating rights to be acquired by Sunderman are contained in Dakota certificates which authorize operations, in interstate or foreign commerce, over irregular routes, as follows: MC 83217 Sub-51 transporting *meats, meat products, and meat byproducts, and articles distributed by meat packing-houses*, as described in sections A and C of Appendix I to the report in *Descriptions in Motor Carrier Certificates*, 61 M.C.C. 209 and 766 (except hides and commodities in bulk), from the facilities of Scottsbluff Packing Company at Scottsbluff, NE, to Chicago, IL, to points in CT, DE, ME, MA, MD, NH, NJ, NY, PA, RI, VA, VT, WV, and DC, restricted to the transportation of traffic originating at the above-named points and destined to the above named destination points; and MC 83211 Sub-56 transporting (1) *meats*, with or without other ingredients, in hermetically sealed containers, from the plant site of Armour Dial, Inc., at Fort Madison, IA, to points in CT, MN, NY, PA, and WV, restricted to the transportation of traffic originating at the named plant site and destined to the above-named destination states, and (2) *meat, meat products and meat byproducts, and articles distributed by meat packing-houses*, as described in sections A and C of Appendix I to the report in *Descriptions in Motor Carrier Certificates*, 61 M.C.C. 209 and 766 (except hides and commodities in bulk), from points in SD, NE, KS, MN, MO, WI, IL, and IN, to the plant site of Armour-Dial, Inc., at Fort Madison, IA, restricted to the transportation of traffic destined to the named plant site. Dakota will retain authority from its Sub-51 authorizing *meats, meat products and meat byproducts*, and *articles distributed by meat packing-houses* as described in sections A and C of Appendix I to the report in *Descriptions in Motor Carrier Certificates*, 61 M.C.C. 209 and 766 (except hides and commodities in bulk), (1) from the facilities of George A. Hormel and Co., at Fort Dodge, IA, to points in CT, DE, ME, MD, MA, NH, NJ, NY, PA, RI, SD, VT, VA, WV, and DC, (2) from the facilities of George A. Hormel and Company at Algona, IA, to Chicago, IL, and points in CT, DE, ME, MD, MA, NH, NJ, NY, PA, RI, VT, VA, WV, and DC, and (3) from the facilities of George A. Hormel and Company at Fremont, NE, to points in CT, DE, ME, MD, MA, NH, NJ, NY, PA, RI, SD, VT, VA, WV, and DC, restricted in (1), (2) and (3) to the transportation of traffic originating at the above-named origin points and destined to the above-named destination points. Sunderman is authorized to operate in interstate or foreign commerce, as a motor common and motor contract carrier, pursuant to its certificates MC 145842 and subs thereunder, and its permits No. MC 125103 and subs thereunder. (Hearing site: Minneapolis, MN.)

Notes.—(1) Dual operations may be involved. (2) Application for temporary authority has been filed.

MC-F-14232F, filed November 27, 1979. TRANSFEREE DEETZ TRUCKING, INC. (Deetz) P.O Box 2 Strum, WI 54770)—PURCHASE (PORTION)—LTL PERRISHABLES, INC. (LTL) AND DAKOTA EXPRESS, INC. (DAKOTA) (550 East 5th Street South, South St. Paul, MN 55075). Vendee's Attorney: Charles J. Kimball, 350 Capitol Life Center, 1600 Sherman Street, Denver, CO 80203. Vendors' Attorney: Donald L. Stern, Suite 610, 7171 Mercy Road, Omaha, NE 68106. Deetz, seeks to purchase portions of the operating rights of LTL and Dakota. Russell K. Deetz, Verle Deetz, Bruce Deetz, and Sherman Deetz, who control Deetz through equal stock ownership, seek to acquire control of the rights through the transaction. LTL and Dakota are commonly owned and controlled by Noel Transfer, Inc., a non-carrier, pursuant to authority granted by the Commission in No. MC-F-12139 and No. MC-F-12411 respectively. Noel Transfer, Inc. also owns and controls Ajax Transfer Company. The interstate operating rights to be acquired by Deetz are contained in (A) Dakota's certificates authorizing the transportation over irregular routes, by motor vehicle, in interstate or foreign commerce, as a common carrier as follows: Certificate No. MC 83217 Sub-36 authorizing *Meats, meat products, and meat by-products*, and *articles distributed by meat packinghouses*, as described in sections A and C of Appendix I to the report in *Descriptions in Motor Carrier Certificates*, 61 M.C.C. 209 and 766 (except commodities in bulk and hides), (1) From Huron, SD, to points in CT, DE, IA, IL, IN, MA, MD, ME, MI, MN, ND, NE, NH, NJ, NY, OH, PA, RI, VA, VT, WI, WV, and DC, restricted to the transportation of traffic originating at Huron, SD, and destined to the indicated destinations, and (2) from the facilities of George A. Hormel and Company at Austin, MN, to points in CT, DE, MA, ME, MD, NH, NJ, NY, PA, RI, VA, VT, WV, and DC, restricted to the transportation of traffic originating at the named facilities and destined to the indicated destinations; Sub-52, that portion authorizing *meats, meat products, and meat byproducts, and articles distributed by meat packing-houses*, as described in sections A and C of Appendix I to the report in *Descriptions in Motor Carrier Certificates*, 61 M.C.C. 209 and 766 (except hides and commodities in bulk), from the facilities of Needham Packing Co., Inc. at or near Fargo, ND, to points in CT, DE, ME, MD, MA, NH, NJ, NY, PA, RI, VT, VA, WV, and DC, restricted to the transportation of traffic originating at the named origins and destined to the indicated destinations; Sub-No. 63 authorizing *confectionery*,

chocolate and *chocolate products*, from the facilities of Hershey Foods Corporation and its subsidiary H. B. Reese Candy Co., in Dauphin County, PA, to points in MN and WI, restricted to the transportation of traffic originating from the named origins and destined to the indicated destinations; (B) LTL's certificates authorizing the transportation over irregular routes, by motor vehicle, in interstate or foreign commerce, as a common carrier as follows: Certificate No. MC 135874 Sub-65, that portion authorizing *such commodities* as are dealt in by retail and wholesale department and hardware stores (except commodities in bulk, foodstuffs, and flat glass), from points in IL, IN, KY, MI, MO, and WI, to Brookings, SD, restricted to the transportation of traffic originating at the named origins and destined to the facilities of Coast-to-Coast Stores Central Organization, Inc., at or near the named destinations; Sub-100F authorizing *Foodstuffs* (except in bulk), in vehicles equipped with mechanical refrigeration, from the facilities of Kraft, Inc., at New Ulm, MN, to points in CT, PA, VA, DE, ME, MD, MA, NH, NY, NJ, RI, VT, OH, IN, MI, WV, KY, IL, ND, SD, NE, IA, MO and DC. Restriction: The operations authorized herein are restricted to the transportation of traffic originating at the named origin and destined to the indicated destinations. Sub-104F authorizing *foodstuffs* (except commodites in bulk), from the facilities of American Home Foods at or near LaPorte, IN, to points in IA, KS, MN, MO, NE, ND, SD, and WI, restricted to the transportation of traffic originating at the facilities of Americen Home Foods at or near LaPorte, IN, and destined to the indicated destinations; Sub-121F authorizing *foodstuffs* (except in bulk), from the facilities of American Home Foods at or near Milton, PA, to LaPorte, IN, and Chicago, IL, restricted to the transportation of traffic originating at the named facilities and destined to the indicated destinations; Sub-122F authorizing *such commodities* as are dealt in or used by grocery and food business houses (except commodities in bulk), in vehicles equipped with mechanical refrigeration, from points, in CT, MA, RI, DE, NJ, NY, PA, MD, OH, IN, and IL, to St. Paul, MN, restricted to the transportation of traffic originating at the indicated origins and destined to the facilities of Gourment Foods, Inc. at St. Paul, MN; Sub-135F authorizing *foodstuffs* (except commodities in bulk), in vehicles equipped with mechanical refrigeration, from Garden City Park, NY, to points in OH, MI, IL, IN, WI, MN, ME, ND, SD, MO, and KS, restricted to the transportation of traffic originating at the facilities of Fruit Crest, Inc., at Garden City Park, NY, and destined to the indicated destinations; Sub-136F authorizing *foodstuffs* (except commodities in bulk), in vehicles equipped with mechanical refrigeration, from the facilities of Termicold Corporation and Ore-Ida Foods, Inc. at or near Plover, WI, to points in CO, CT, DE, IL, IN, IA, KS, KY, ME, MD, MA, MI, MN, MO, NE, NH, NJ, NY, NC, ND, OH, PA, RI, SC, SD, TN, VT, VA, WV, WI, and DC, restricted to the transportation of traffic originating at the named facilities and destined to the indicated destinations; and Sub-138F authorizing *frozen foods* (except commodities in bulk), from the facilities of the Kitchens of Sara Lee at (a) Deerfield, IL, and (b) New Hampton, IA, to points in OH, WV, VA, MD, DE, NJ, PA, NY, CT, RI, MA, NH, VT, ME, and DC, restricted to the transportation of traffic originating at the named origin facilities and destined to the indicated destinations. LTL will retain authority from its Sub-65 authorizing *such commodities* as are dealt in by retail and wholesale department and hardware stores (except commodities in bulk, foodstuffs, and flat glass), (1) from points in CT, DE, ME, MD, MA, NH, NY, NJ, OH, PA, RI, VT, VA, WV, and DC, to Crawfordsville, IN, Brookings, SD, and Kansas City, MO, and (2) from points in IL, IN, KY, MI, and WI, to Kansas City, MO, restricted in (1) and (2) above to the transportation of traffic originating at the named origins and destined to the facilities of Coast-to-Coast Stores Central Organization, Inc. at or near the named destinations. Dakota will retain authority from its Sub-52 authorizing *meats, meat products and meat byproducts, and articles distributed by meat packing-houses* as described in sections A and C of Appendix I to the report in *Descriptions in Motor Carrier Certificates*, 61 M.C.C. 209 and 766 (except hides and commodities in bulk), from the facilities of Needham Packing Co., Inc. at or near Sioux City, IA, and Omaha, NE, to points in CT, DE, ME, MD, MA, NH, NJ, NY, PA, RI, VT, VA, WV, and DC, restricted to the transportation of traffic originating at the named origins and destined to the indicated destinations; and Sub-63 authorizing *confectionery, chocolate and chocolate products*, from the facilities of Hershey Foods Corporation and its subsidiary, H.B. Reese Candy Co. in Dauphin County, PA, to points in IL, and MO, restricted to the transportation of traffic originating from the named origins and destined to the indicated destinations. Deetz is authorized to operate in interstate or foreign commerce, as a motor common carrier, pursuant to its certificates No. MC-146071 and subs thereunder. (Hearing site: Chicago, IL.)

Notes.—(1) Application for temporary authority has been filed. (2) The commodity descriptions have been changed to reflect current Commission policy.

MC-F-14234F, filed November 21, 1979. HARBOURT AIR FREIGHT SERVICE, INC. (Harbourt) (3570 Quakerbridge Rd., Trenton, NJ 08619)—Controlling—NEWHART EXPRESS, INC. (Newhart) (1719 Hamilton Ave., Trenton, NJ 08619). Representative: Russell S. Bernhard, 1625 K St., NW, Washington, DC 20006. Harbourt seeks to acquire control of Newhart through the purchase by Harbourt of all the capital stock of Newhart, and in turn, Richard A. Harbourt, Marion Harbourt, and Erna Magnus (3570 Quakerbridge Rd., Trenton, NJ 08619), who control Harbourt through equal stock ownership, seek to acquire control of Newhart through the transaction. The interstate operating rights to be controlled are contained in Newhart's Certificate in MC 1928 which authorizes the transportation of general commodities except liquor and usual exceptions, over irregular routes, between Trenton, NJ, and Philadelphia, PA. Harbourt is a motor common carrier which holds authority pursuant to Certificates issued in MC 123579 and sub-numbers thereunder which authorize the transportation of general commodities with usual exceptions, over irregular routes, (a) between Philadelphia International Airport, Philadelphia, PA, LaGuardia and John F. Kennedy International Airports, New York, NY, and Newark Municipal Airport, Newark, NJ, on the one hand, and, on the other, Neshanic, Flemington, Frenchtown, Rocky Hill, Plainsboro, Monmouth Junction, Dayton, Cranbury and Lambertville, NJ, points in Mercer and Burlington Counties, NJ, north of Rancocas Creek, and points in Bucks County, PA, on and south and east of PA Hwy 232, and (b) between Philadelphia International Airport and Newark Municipal Airport, restricted in (a) and (b) above to the transportation of traffic having a prior or subsequent movement by air. Condition: Authorization and approval of this transaction is conditioned upon the modification of Harbourt's Certificate in MC 123579 to eliminate that portion which duplicates Newhart's authority. Therefore, MC 123579 will be restricted against the transportation of traffic between Trenton, NJ, and the Philadelphia

International Airport, Philadelphia, PA. (Hearing site: Washington, DC.)

[FR Doc. 80-746 Filed 1-9-80; 8:45 am]

BILLING CODE 7035-01-M

[Rule 19; Ex Parte No. 241, 36th Rev. Exemption No. 129]

Exemption Under Provision of Mandatory Car Service Rules

Correction

In FR Doc. 79-38831, appearing on page 75260, in the issue of Wednesday, December 19, 1979, the heading should have read as set forth above.

BILLING CODE 1505-01-M

Sunshine Act Meetings

Federal Register
Vol. 45, No. 7
Thursday, January 10, 1980

This section of the FEDERAL REGISTER contains notices of meetings published under the "Government in the Sunshine Act" (Pub. L. 94-409) 5 U.S.C. 552b(e)(3).

CONTENTS

	Items
Federal Maritime Commission	1
National Transportation Safety Board	2
Securities and Exchange Commission	3
U.S. Railroad Retirement Board	4

1

FEDERAL MARITIME COMMISSION.

TIME AND DATE: 10 a.m., January 17, 1980.

PLACE: Hearing room one—1100 L Street NW., Washington, D.C. 20573.

STATUS: Open.

MATTERS TO BE CONSIDERED:

1. Monthly Report of actions taken pursuant to authority delegated to the Managing Director.
2. Application for independent ocean freight forwarder license: Dynamic International Freight Forwarders, Inc.—Proposed order of investigation.
3. Docket No. 79-58: Dual Rate Contract Systems in the Foreign Commerce of the United States—Discussion of comments.
4. Special Docket No. 678: Application of Yamashita-Shinnihon Line for the Benefit of Nissho-Iwai American Corp.—Review of Initial Decision.
5. Special Docket No. 684: Application of Sea-Land Service, Inc., for the Benefit of Solytex Polymers Corp.—Review of Initial Decision.
6. Docket No. 79-55: Matson Navigation Company Proposed Bunker Surcharge in the Hawaii Trade—Petition of Hearing Counsel for clarification.

CONTACT PERSON FOR MORE INFORMATION: Francis C. Hurney, Secretary (202) 523-5725.

[S-44-80 Filed 1-8-80; 11:55 am]

BILLING CODE 6730-01-M

2

[NM-80-3]

NATIONAL TRANSPORTATION SAFETY BOARD.

TIME AND DATE: 9 a.m., Thursday, January 17, 1980.

PLACE: NTSB Board Room, National Transportation Safety Board, 800 Independence Avenue, SW., Washington, D.C. 20594.

STATUS: Open.

MATTERS TO BE CONSIDERED:

1. *Aircraft Accident Report.*—Trans World Airlines, Inc., B-727, N840TW, near Saginaw, Michigan, April 4, 1979.
2. *Recommendation* to the Federal Aviation Administration re flightcrew controllability of B-727 with asymmetrical slats.
3. *Marine Accident Report.*—Collision of S/T Texaco Iowa and the M/T Burmah Spar on the Mississippi River, Pilottown, Louisiana, October 3, 1978, and *Recommendations* to U.S. Coast Guard, National Ocean Survey, Associated Branch Pilots, and the Crescent River Port Pilots Association.
4. *Recommendation* to Federal Aviation Administration re pilot-in-command seating for Part 135 operations.
5. *Special Study.*—Railroad Emergency Procedures.
6. Staff review of Joint NTSB-USCG Regulations.
7. *Safety Objective Program* on Grade Cross Safety—Train Delineation.

CONTACT PERSON FOR MORE INFORMATION: Sharon Flemming, 202-472-6022.

January 8, 1980.

[S-47-80 Filed 1-8-80; 3:18 pm]

BILLING CODE 4910-58-M

3

SECURITIES AND EXCHANGE COMMISSION.

Notice is hereby given, pursuant to the provisions of the Government in the Sunshine Act, Pub. L. 94-409, that the Securities and Exchange Commission will hold the following meetings during the week of January 14, 1980, in Room 825, 500 North Capitol Street, Washington, D.C.

An open meeting will be held on Monday, January 14, 1980, at 2:30 p.m., immediately followed by a closed meeting.

The Commissioners, their legal assistants, the Secretary of the Commission, and recording secretaries will attend the closed meeting. Certain staff members who are responsible for the calendared matters may be present.

The General Counsel of the Commission, or his designee, has certified that, in his opinion, the items to be considered at the closed meeting may be considered pursuant to one or more of the exemptions set forth in 5 U.S.C. 552b(c)(4)(8)(9)(A) and (10) and 17 CFR 200.402 (a)(4)(8)(9)(i) and (10).

Chairman Williams and Commissioners Loomis, Evans, Pollack and Karmel determined to hold the aforesaid meeting in closed session.

The subject matter of the open meeting scheduled for Monday, January 14, 1980, at 2:30 p.m., will be: Consideration of a release announcing the adoption of a proposed amendment to Securities Exchange Act Rule 15b10-12 to achieve uniformity in the application of the SECO fair practice rules to SECO brokers and dealers.

The subject matter of the closed meeting scheduled for Monday, January 14, 1980, immediately following the 2:30 p.m. open meeting, will be:

Formal orders of investigation.
Litigation matter.
Freedom of Information Act appeal.
Amendment of injunctive action.
Institution of injunctive action.
Regulatory matter regarding financial institution.

At time changes in Commission priorities require alterations in the scheduling of meeting items. For further information and to ascertain what, if any, matters have been added, deleted or postponed, please contact: John Ketels at (202) 272-2462.

January 7, 1980.

[S-46-80 Filed 1-8-80; 12:21 pm]

BILLING CODE 8010-01-M

4

U.S. RAILROAD RETIREMENT BOARD.

TIME AND DATE: 9 a.m., January 17, 1980.

PLACE: Board's meeting room on the eighth floor of its headquarters building at 844 Rush Street, Chicago, Illinois 60611.

STATUS: Part of this meeting will be open to the public. The rest of the meeting will be closed to the public.

MATTERS TO BE CONSIDERED: Portion open to the public:

(1) Interview by industrial psychologist.
(2) Federal Women's Program.
(3) Personnel matters—Bureau of Research.

Portion closed to the public:

(4) Appeal from referee's denial of disability annuity application, Leonard Lucious.
(5) Appeal of Patricia F. Saunders under the Railroad Unemployment Insurance Act.

CONTACT PERSON FOR MORE INFORMATION: R. F. Butler, Secretary of the Board, COM No. 312-741-4920; FTS No. 387-4920.

[S-45-80 Filed 1-8-80; 11:55 am]

BILLING CODE 7905-01-M

Sunshine Act Meetings

This section of the FEDERAL REGISTER contains notices of meetings published under the "Government in the Sunshine Act" (Pub. L. 94-409), 5 U.S.C. 552b(e)(3).

CONTENTS

	Items
Federal Maritime Commission	1
National Transportation Safety Board	2
Securities and Exchange Commission	3
U.S. Railroad Retirement Board	4

1

FEDERAL MARITIME COMMISSION.

TIME AND DATE: 10 a.m., January 17, 1990.

PLACE: Hearing room one—1100 L Street NW., Washington, D.C. 20573.

STATUS: Open.

MATTERS TO BE CONSIDERED:

1. Monthly Report of actions taken pursuant to authority delegated to the Managing Director.

2. Application for independent ocean freight forwarder license: Dynamic International Freight Forwarders, Inc.—Proposed order of investigation.

3. Docket No. 75-60: Dual Rate Contract Systems in the Foreign Commerce of the United States—Discussion of comments.

4. Docket No. 87-9: Application of Yuasa-Inc Steamship Line for the Benefit of Nissho Iwai American Corp.—Review of Initial Decision.

5. Docket No. 88-1: Application of Yuasa Lines Service, Inc. for the benefit of Indiana Polymers Corp.—Review of Initial Decision.

6. Docket No. 88-42: Matson Navigation Company Proposed Surcharge in the Hawaii Trade—Motion of Hearing Counsel for clarification.

CONTACT PERSON FOR MORE INFORMATION: Francis C. Hurney, Secretary, (202) 523-5725.

[illegible]

2

[1990-90-2]

NATIONAL TRANSPORTATION SAFETY BOARD.

TIME AND DATE: 9 a.m., Thursday, January 17, 1990.

PLACE: Board Room, National Transportation Safety Board, 800 Independence Avenue, SW., Washington, D.C. 20594.

STATUS: Open.

MATTERS TO BE CONSIDERED:

1. *Aircraft Accident Briefs*—Trans World Airlines, Inc., B-727, N52STW, near Saginaw, Michigan, April 4, 1989.

2. Recommendation to the Federal Aviation Administration *re Engineering* [illegible] of B-727 with aft cargo door.

3. *Marine Accident Report*—Collision of M/V Tenaco Iowa and the M/V Peoples Spirit on the Mississippi River, Pilottown, Louisiana, October 5, 1989, and Recommendations to U.S. Coast Guard, National Ocean Service, Associated Branch Pilots, and the Crescent River Port Pilots Association.

4. Recommendation to Federal Aviation Administration to [illegible] and testing for Part 121 operations.

5. Special Briefing—Railroad Emergency Preparedness.

6. Staff review of Joint NTSB-OSHA Regulations.

7. *Safety Objective Program on Grade Crossing Safety*—Twin Bridge Intersection.

CONTACT PERSON FOR MORE INFORMATION: Thomas Thoroughgood, 202-382-6525.

January 5, 1990.

[illegible]

3

SECURITIES AND EXCHANGE COMMISSION.

Notice is hereby given, pursuant to the provisions of the Government in the Sunshine Act, Pub. L. 94-409, that the Securities and Exchange Commission will hold the following meetings during the week of January 14, 1990, in Room 825, 450 Fifth Street, N.W., Washington, D.C.

An open meeting will be held on Monday, January 15, 1990, at 2:30 p.m., immediately followed by a closed meeting.

The [illegible], their legal advisors, the Secretary of the Commission and recording secretaries will attend the closed meeting. Certain staff members who are responsible for the subject matters may be present.

MATTERS TO BE CONSIDERED: Portion open to the public.

(1) Interview by [illegible] of a [illegible].

(2) Federal Worker's Program.

(3) Personnel matters—Bureau of Enforcement.

Portion closed to the public.

The Commission will hold a closed meeting to [illegible] the following matters:

(1) A report of Office of Inspector General [illegible].

(2) A report of Office of Inspector General [illegible].

(3) Adjudicatory matters.

(4) [illegible]

CONTACT PERSON FOR MORE INFORMATION: [illegible], Secretary of the Commission, (202) 272-[illegible].

[illegible] and Kornel [illegible] will be [illegible] a closed meeting in [illegible].

The subject matter of the open meeting scheduled for Monday, January 15, 1990, at 2:30 p.m., will be:

Consideration of a release announcing the adoption of a proposed amendment to Securities Exchange Act Rule 15c10-12 to achieve uniformity in the application of the SECO fair practice rules to SECO brokers and dealers.

The subject matter of the closed meeting scheduled for Monday, January 15, 1990, immediately following the 2:30 p.m. open meeting, will be:

Formal orders of investigations.

Litigation matters.

Implementation of Liquidation Act appeal.

Assessment of adjudicatory actions.

Consideration of enforcement actions.

Regulatory matters regarding financial institutions.

At times changes in Commission priorities require alterations in the scheduling of meeting items. For further information and to ascertain what, if any, matters have been added, deleted or postponed, please contact: John Ketels at (202) 272-2467.

January 5, 1990.

[illegible]

4

U.S. RAILROAD RETIREMENT BOARD.

TIME AND DATE: 9 a.m., January 17, 1990.

PLACE: Board's meeting room on the eighth floor of its Headquarters Building at 844 Rush Street, Chicago, Illinois 60611.

STATUS: Part of this meeting will be open to the public. The rest of the meeting will be closed to the public.

federal register

Thursday
January 10, 1980

Part II

Department of Justice

Privacy Act of 1974; Annual Publication of Systems of Records

DEPARTMENT OF JUSTICE

[AAG/A Order No. 39-79]

Privacy Act System Notices; 1979 Annual Publication

Agency: Department of Justice.

Action: Annual publication of Privacy Act Issuances.

Summary: Federal agencies are required by the Privacy Act of 1974 to give annual notice of records they maintain from which information can be retrieved by name or other personal identifier. Accordingly, the Department of Justice published on September 30, 1977 in FEDERAL REGISTER Volume 42 a notice of all such systems of records maintained by the Department. On September 28, 1978 the Department published in FEDERAL REGISTER Volume 43 the annual update which reflected only those systems which had been added, amended, or revoked during the year, and those which we proposed to amend at that time. Subsequently for the convenience of the public, the Office of the FEDERAL REGISTER issued a publication which combined the 1977 notice and the 1978 update into a single document entitled "Privacy Act Issuances Compilation—1978, Volume III." This document reflected all systems of records issued through September 1978. Now, by way of this notice, the Department is publishing the 1979 annual update which reflects only those systems which have been added, amended or revoked during 1978, and those which we propose to amend or delete at this time.

These publications can be examined free of charge at Regional Depository Libraries at 50 locations around the country, and at the General Services Administration Federal Information Centers at 38 central locations around the country. They can also be purchased from the Superintendent of Documents, U.S. Government Printing Office, Washington, D.C. 20402. In addition, upon request the Office of the Federal Register will furnish a photocopy of the full text of a particular records system for a nominal fee.

Published here are:

Part I: a table of contents listing *all* the systems of records published here in full text;

Part II: the full text of systems of records which the Department *amended* during the year, and the full text of *new* systems of records which the Department *established* during the year;

Part III: notice citing those systems of records *merged* or *deleted* during the year and one system of records which was published in error and which the Bureau of Prisons now proposes to delete; and

Part IV: the full text of systems of records which the Department *now proposes to amend.*

DATES: This document fulfills the annual notice requirements of the Privacy Act for 1979.

FOR FURTHER INFORMATION CONTACT: William J. Snider (202-633-3452).

Dated: December 26, 1979.

Harry H. Flickinger,
Kevin D. Rooney,
Acting Assistant Attorney General for Administration.

Part I

TABLE OF CONTENTS

Composite listing of all systems of records published here in full text

JUSTICE/AAG-013, Freedom of Information and Privacy Appeals Index.
JUSTICE/CIV-001, The Civil Division Case File System.
JUSTICE/CIV-002, The Civil Division Case File System; Customs Litigation.
JUSTICE/CRT-007, The Files on Employment Civil Rights Matters Referred by the Equal Opportunity Commission System.
JUSTICE/CRS-001, Operational Data Information System.
JUSTICE/CFM-023, Weekly Statistical Report.
JUSTICE/CFM-026, Index of Prisoners Transferred Under Prisoner Transfer Treaties.
JUSTICE/DAG-007, The United States National Central Bureau (USNCB) (Department of Justice) of the International Criminal Police Organization (INTERPOL) Criminal Investigative Records System.
JUSTICE/DEA-008, Investigative Reporting and Filing System.
JUSTICE/DEA-010, Office of Internal Security Records.
JUSTICE/DEA-011, Operations Files.
JUSTICE/DEA-012, Registration Status/Investigation Records.
JUSTICE/DEA-013, Security Files.
JUSTICE/DEA-014, System to Retrieve Information from Drug Evidence (STRIDE/Ballistics).
JUSTICE/DEA-015, Training Files.
JUSTICE/DEA-020, Essential Chemical Reporting System.
JUSTICE/DEA-021, DEA Air Wing Reporting System.
JUSTICE/DEA-INS-111, Automated Intelligence Records System.
JUSTICE/FBI-001, National Crime Information Center (NCIC).
JUSTICE/FBI-002, The FBI Central Records System.
JUSTICE/FBI-009, Indentification Division Records System.
JUSTICE/INS-004, Top Priority Program (TPP).
JUSTICE/INS-005, Integrated Case Control System.
JUSTICE/INS-999, INS Appendix: List of Principal Offices of the Immigration and Naturalization Service.
JUSTICE/JMD-001, Background Investigation Check-off Card.
JUSTICE/JMD-002, Controlled Substances Act Nonpublic Records.
JUSTICE/JMD-003, Department of Justice Payroll System.
JUSTICE/JMD-007, Legal and General Administration Accounting System (LAGA).
JUSTICE/JMD-008, Security Clearance Information System (SCIS).
JUSTICE/JMD-009, Justice Data Management Service Center Utilization Report.
JUSTICE/JMD-010, Document Information System (DIS).
JUSTICE/JMD-011, Justice Data Management Service Center Tape Library System.
JUSTICE/JMD-012, Executive Biography.
JUSTICE/JMD-013, Employee Locator File.
JUSTICE/JMD-015, EEO (Equal Emloyment Opportunity) Volunteer Representative Roster.
JUSTICE/JMD-017, Department of Justice Controlled Parking Records.
JUSTICE/JMD-018, Occupational Health Physical Fitness Files.
JUSTICE/JMD-019, Freedom of Information/Privacy Act Records.
JUSTICE/LDN-006, Citizens' Mail File.
JUSTICE/LEAA-005, The Financial Management System.
JUSTICE/LEAA-008, The Civil Rights Investigative System.
JUSTICE/LEAA-010, The Technical Assistance Resources Files.
JUSTICE/LEAA-012, The Public Safety Officers' Benefits System.
JUSTICE/OLC-003, Office of Legal Counsel Central File.
JUSTICE/OPA-001, Executive Clemency Files.
JUSTICE/PRC-001, Docket, Scheduling and Control.
JUSTICE/PRC-002, Freedom of Information Act Record System.
JUSTICE/PRC-003, Inmate and Supervision Files.
JUSTICE/PRC-004, Labor and Pension Case, Legal File and General Correspondence System.
JUSTICE/PRC-005, Office Operation and Personnel System.
JUSTICE/PRC-006, Statistical, Educational and Development System.
JUSTICE/PRC-007, Workload Record, Decision Result, and Annual Report System.
JUSTICE/BOP-005, Inmate Central Records System.
JUSTICE/BOP-999, Appendix of Field Location for the Bureau of Prisions.

Part II

Systems of records *amended* and published during the year and systems of records *established* and published during the year are listed below. The date published, the FEDERAL REGISTER volume number, and the page number are cited in parentheses. Following the list, the systems are reprinted in full text.

Amended

JUSTICE/CRM-023, Weekly Statistical Report (November 15, 1978, FR Vol. No. 43, page 53067).

JUSTICE/DEA-INS-111, Automated Intelligence Records System (December 11, 1978, FR Vol. No. 43, page 57990).

JUSTICE/FBI-001, National Crime Information Center (NCIC) (May 22, 1979, FR Vol. No. 44, page 29742).

JUSTICE/FBI-002, The FBI Central Records System (October 12, 1979, FR Vol. No. 44, page 58981).

JUSTICE/FBI-009, Identification Division Records System (July 9, 1979, FR Vol. 44, page 40145).

New

JUSTICE/CRM-026, Index of Prisoners Transferred Under Prisoner Transfer Treaties (July 30, 1979, FR Vol. No. 44, page 44629).

JUSTICE/DAG-007, The United States National Central Bureau (USNCB) (Department of Justice) of the International Criminal Police Organization (INTERPOL) Criminal Investigative Records System (October 12, 1979, FR Vol. No. 44, page 58993).

JUSTICE/DEA-015, Training Files (November 16, 1979, FR Vol. No. 44, page 66087).

JUSTICE/DEA-020, Essential Chemical Reporting System (January 22, 1979, FR Vol. No. 44, page 4542).

JUSTICE/DEA-021, DEA Air Wing Reporting System (September 6, 1979, FR Vol. No. 44, page 52052.

JUSTICE/INS-004, Top Priority Program (TPP) (March 8, 1979, FR Vol. No. 44, page 12779).

JUSTICE/INS-005, Integrated Case Control System (December 20, 1979, FR Vol. No. 44, page 75530).

JUSTICE/INS-999, INS Appendix: List of Principal Offices of the Immigration and Naturalization Service (December 20, 1979, FR Vol. No. 44, page 75531).

JUSTICE/LDN-006, Citizens' Mail File (December 7, 1979, FR Vol. No. 44, page 70587).

JUSTICE/OLC-003, Office of Legal Counsel Central File (November 16, 1979, FR Vol. No. 44, page 66088).

JUSTICE/CRM-023

System name: Weekly Statistical Report.

System location: U.S. Department of Justice; Criminal Division; 10th & Constitution Avenue, N.W.; Washington, D.C. 20530.

Categories of individuals covered by the system: Past or present attorneys and paralegals of the Criminal Division.

Categories of records in the system: The system consists of weekly statistical reports submitted by each attorney and paralegal of the Criminal Division detailing the time expended on case or matter oriented activities and on noncase and nonmatter oriented activities. The system also includes periodic computer printout summaries.

Authority for maintenance of the system: This system is established and maintained pursuant to 44 U.S.C. 3101.

Routine uses of records maintained in the system, including categories of users and the purposes of such uses: Statistical compilations arranged by Section and by Division are submitted to the Congress and the Office of Management and Budget in connection with annual appropriations. There are no other uses of the records in this system outside of the Department of Justice.

Release of information to the news media: Information permitted to be released to the news media and the public pursuant to 28 C.F.R. 50.2 may be made available from systems of records maintained by the Department of Justice unless it is determined that release of the specific information in the context of a particular case would constitute an unwarranted invasion of personal privacy.

Release of information to Members of Congress. Information contained in systems of records maintained by the Department of Justice, not otherwise required to be released pursuant to 5 U.S.C. 552, may be made available to a Member of Congress or staff acting upon the Member's behalf when the Member or staff requests the information on behalf of and at the request of the individual who is the subject of the record.

Release of information to the National Archives and Records Service: A record from a system of records may be disclosed as a routine use to the National Archives and Records Service (NARS) in records management inspections conducted under the authority of 44 U.S.C. 2904 and 2906.

Policies and practices for storing, retrieving, accessing, retaining, and disposing of records in the system:

Storage: Original Weekly Statistical Reports are retained and the information contained thereon is also stored at the Department's computer center. Summaries are also retained on computer printout paper. Records not at the computer center are stored in file cabinets in the Criminal Division.

Retrievability: The record is retrieved by date, section, unit, and name of attorney or paralegal.

Safeguards: The computer center is maintained by the Office of Management and Finance which has designated security procedures consistent with the sensitivity of the data. Materials related to the system maintained at locations other than the location of the computer center are protected and safeguarded in accordance with applicable Departmental rules.

Retention and disposal: Information as to individuals is destroyed at the computer center annually. Original weekly reports are destroyed approximately every two years. Statistical data and compilations are maintained indefinitely.

System manager(s) and address: Assistant Attorney General; Criminal Division; U.S. Department of Justice; 10th & Constitution Avenues, N.W.; Washington, D.C. 20530.

Notification procedure: Same as above.

Record access procedures: A request for access to a record from this system shall be made in writing with the envelope and the letter clearly marked 'Privacy Access Request.' Include in the request the name of the past or present attorney or paralegal employed by the Criminal Division. The requestor shall also provide a return address for transmitting the information. Access requests will be directed to the System Manager listed above.

Contesting record procedures: Individuals desiring to contest or amend information maintained in the system should direct their request to the System Manager listed above, stating clearly and concisely what information is being contested, the reasons for contesting it, and the proposed amendment to the information sought.

Record source categories: Attorneys and paralegals of the Criminal Division.

Systems exempted from certain provisions of the act: None.

JUSTICE/DEA-INS-111

System name: Automated Intelligence Records System (Pathfinder)

System location: U.S. Department of Justice, Drug Enforcement Administration, 1405 Eye Street, N.W., Washington, D.C. 20537 and El Paso Intelligence Center (EPIC), El Paso, Texas 79902.

Categories of individuals covered by the system: (1) Those individuals who are known, suspected, or alleged to be involved in (a) narcotic trafficking, (b) narcotic-arms trafficking, (c) alien smuggling or transporting, (d) illegally procuring, using, selling, counterfeiting, reproducing, or altering identification documents relating to status under the immigration and nationality laws, (e) terrorist activities (narcotic, arms or alien trafficking/smuggling related), (f) crewman desertions and stowaways, and (g) arranging or contracting a marriage to defraud the immigration laws; (2) In addition to the categories of individuals listed above, those individuals who (a) have had citizenship or alien identification documents put to fraudulent use or have reported them as lost or stolen, (b) arrive in the United States from a foreign territory by private aircraft, and (c) are informants or witnesses (including non-implicated persons) who have pertinent knowledge of some circumstances or aspect of a case or suspect may be the subject of a file within this system; and (3) In the course of criminal investigation and intelligence gathering, DEA and INS may detect violation of non-drug or non-alien related laws. In the interests of effective law enforcement, this information is retained in order to establish patterns of criminal activity and to assist other law enforcement agencies that are charged with enforcing other segments of criminal law. Therefore, under certain limited circumstances, individuals known, suspected, or alleged to be involved in non-narcotic or non-alien criminal activity may be the subject of a file maintained within this system.

Categories of records in the system: In general, this system contains computerized and manual intelligence information gathered from DEA and INS investigative records and reports. Specifically, intelligence information is gathered and collated from the following DEA and INS records and reports: (1) DEA Reports of Investigation (DEA-6), (2) DEA and INS Intelligence Reports, (3) INS Air Detail Office Index (I-92A), (4) INS Anti-Smuggling Indices (G-170), (5) INS Marine Intelligence Index, (6) INS Fraudulent Document Center Index, (7) INS Terrorist Index, and (8) INS Reports of Investigation and Apprehension (I-44, I-213, G-166). In addition, data is obtained from commercially available flight plan information concerning individuals known, suspected or alleged to be involved in criminal smuggling activities using private aircraft.

Authority for maintenance of the system: This system has been established in order for DEA and INS to carry out their law enforcement, regulatory, and intelligence functions mandated by the Comprehensive Drug Abuse Prevention and Control Act of 1970 (84 Stat. 1236), Reorganization Plan No. 2 of 1973, the Single Convention on Narcotic Drugs, (18 UST 1407), and Sections 103, 265, and 290 and Title III of the Immigration and Nationality Act, as amended, (8 U.S.C. 1103, 1305, 1360, 1401 et seq.). Additional authority is derived from Treaties, Statutes, Executive Orders and Presidential Proclamations which DEA and INS have been charged with administering.

Routine uses of records maintained in the system, including categories of users and the purposes of such uses: This system will be used to produce association and link analysis reports and such special reports as required by intelligence analysts of DEA and INS. The system will also be used to provide 'real-time' responses to queries from Federal, state, and local agencies charged with border law enforcement responsibilities.

Information from this system will be provided to the following categories of users for law enforcement and intelligence purposes provided a legitimate and lawful 'need to know' is demonstrated: (a) Other Federal law enforcement agencies, (b) state and local law enforcement agencies, (c) foreign law enforcement agencies with whom DEA and INS maintain liaison, (d) U.S. intelligence and military intelligence agencies involved in border criminal law enforcement, (e) clerks and judges of courts exercising appropriate jurisdiction over subject matter maintained within this system, and (f) in the event there is an indication of a violation or potential violation

of law whether civil, criminal, regulatory, or administrative in nature, the relevant information may be referred to the appropriate agency, whether Federal, state, local or foreign, charged with the responsibility of investigating or prosecuting such violation or charged with enforcing or implementing the statute or rule, regulations, or order issued pursuant thereto.

Release of information to the National Archives and Records Service: A record from a system of records may be disclosed as a routine use to the National Archives and Records Service (NARS) in records management inspections conducted under the authority of 44 U.S.C. 2904 and 2906.

Policies and practices for storing, retrieving, accessing, retaining, and disposing of records in the system:

Storage: Manual subsets of the Pathfinder Information System are maintained on standard index cards and manual folders. Standard security formats are employed. The automated Pathfinder Information System is stored on digital computers in the Drug Enforcement Administration Office of Intelligence Secured Computer facilities located at DEA Headquarters and El Paso, Texas.

Retrievability: Access to individual records can be accomplished by reference to either the manual indices or the automated information system. Access is achieved by reference to personal identifiers, other data elements or any combination thereof.

Safeguards: The Pathfinder System of Records is protected by both physical security methods and dissemination and access controls. Fundamental in all cases is that access to intelligence information is limited to those persons or agencies with a demonstrated and lawful need to know for the information in order to perform assigned functions.

Physical security when intelligence files are attended is provided by responsible DEA and INS employees. Physical security when files are unattended is provided by the secure locking of material in approved containers or facilities. The selection of containers or facilities is made in consideration of the sensitivity or National Security Classification, as appropriate, of the files, and the extent of security guard and/or surveillance afforded by electronic means.

Protection of the automated information system is provided by physical, procedural, and electronic means. The master file resides in the DEA Office of Intelligence Secured Computer System and is physically attended or safe-guarded on a full time basis. Access or observation to active telecommunications terminals is limited to those with a demonstrated need to know for retrieval information. Surreptitious access to an unattended terminal is precluded by a complex authentication procedure. The procedure is provided only to authorized DEA and INS employees. Transmission from DEA Headquarters to El Paso, Texas is accomplished via a dedicated secured line.

An automated log of queries is maintained for each terminal. Improper procedure results in no access and under certain conditions completely locks out the terminal pending restoration by the master controller at DEA Headquarters after appropriate verification. Unattended terminals are otherwise located in locked facilities after normal working hours.

The dissemination of intelligence information to an individual outside the Department of Justice is made in accordance with the routine uses as described herein and otherwise in accordance with conditions of disclosure prescribed in the Privacy Act. The need to know is determined in both cases by DEA and INS as a prerequisite to the release of information.

Retention and disposal: Records maintained within this system are retained for fifty-five (55) years.

System manager(s) and address: Assistant Administrator for Intelligence, Drug Enforcement Administration, 1405 Eye Street, N.W., Washington, D.C. 20537 and Associate Commissioner, Management, Immigration and Naturalization Service, 425 Eye Street, N.W., Washington, D.C. 20536.

Notification procedure: Inquiries should be addressed to Freedom of Information Unit, Drug Enforcement Administration, 1405 Eye Street, N.W., Washington, D.C. 20537.

Record access procedures: Same as notification procedure.

Contesting record procedures: Same as notification procedure.

Record source categories: Commercially available flight plan information source; DEA intelligence and investigative records/reports; INS investigative, intelligence and statutory mandated records/reports; records and reports of other Federal, state and local agencies; and reports and records of foreign agencies with whom DEA maintains liaison.

Systems exempted from certain provisions of the act: The Attorney General has proposed exemption of this system from subsections (c) (3) and (4), (d), (e) (1), (2), and (3), (e) (4) (g), (H) and (I), (e) (5) and (8), (f), (g), and (h) of the Privacy Act pursuant to 5 U.S.C. 552a (j) and (k). Regulations have been promulgated in accordance with the requirements of 5 U.S.C 553 (b), (c) and (e) and have been published in the Federal Register.

JUSTICE/FBI-001

System name: National Crime Information Center (NCIC).

System location: Federal Bureau of Investigation; J. Edgar Hoover Bldg., 10th and Pennsylvania Avenue NW., Washington, D.C. 20535.

Categories of individuals covered by the system: A. Wanted Persons: 1. Individuals for whom Federal warrants are outstanding. 2. Individuals who have committed or have been identified with an offense which is classified as a felony or serious misdemeanor under the existing penal statutes of the jurisdiction originating the entry and felony or misdemeanor warrant has been issued for the individual with respect to the offense which was the basis of the entry. Probation and parole violators meeting the foregoing criteria. 3. A "Temporary Felony Want" may be entered when a law enforcement agency has need to take prompt action to establish a "want" entry for the apprehension of a person who has committed, or the officer has reasonable grounds to believe has committed, a felony and who may seek refuge by fleeing across jurisdictional boundaries and circumstances preclude the immediate procurement of a felony warrant. A "Temporary Felony Want" shall be specifically identified as such and subject to verification and support by a proper warrant within 48 hours following the initial entry of a temporary want. The agency originating the "Temporary Felony Want" shall be responsible for subsequent verification or re-entry of a permanent want.

B. Individuals who have been charged with serious and/or significant offenses.

C. Missing Persons: 1. A person of any age who is missing and who is under proven physical/mental disability or is senile, thereby subjecting himself or others to personal and immediate danger. 2. A person of any age who is missing under circumstances indicating that his disappearance was not voluntary. 3. A person of any age who is missing and in the company of another person under circumstances indicating that his physical safety is in danger. 4. A person who is missing and declared unemanicipated as defined by the laws of his state of residence and does not meet any of the entry criteria set forth in 1, 2, or 3 above.

Categories of records in the system: A. Stolen Vehicle File: 1. Stolen vehicles. 2. Vehicles wanted in conjunction with felonies or serious misdemeanors. 3. Stolen vehicle parts, including certificates of origin or title.

B. Stolen License Plate File: 1. Stolen or missing license plate.

C. Stolen/Missing Gun File: 1. Stolen or missing guns, 2. Recovered gun, ownership of which has not been established.

D. Stolen Article File.

E. Wanted Person File: Described in "Categories of individuals covered by the system: A. Wanted Persons".

F. Securities File: 1. Serially numbered stolen, embezzled, counterfeited, missing securities. 2. "Securities" for present purposes of this file are currency (e.g. bills, bank notes) and those documents or certificates which generally are considered to be evidence of debt (e.g. bonds, debentures, notes) or ownership of property (e.g. common stock, preferred stock), and documents which represent subscription rights, warrants) and which are of those types traded in the securities exchanges in the United States, except for commodities futures. Also included are warehouse receipts, travelers checks and money orders.

G. Boat File.

H. Computerized Criminal History File: A cooperative Federal-State program for the interstate exchange of criminal history record information for the purpose of facilitating the interstate exchange of such information among criminal justice agencies.

I. Missing Person File: Described in "Categories of individuals covered by the system: C. Missing Persons".

Authority for maintenance of the system: The system is established and maintained in accordance with Title 28, United States Code, Section 534 and Title 28—Judicial Administration, Chapter I—Department of Justice (Order No. 601-75) Part 20—Criminal Justice Information Systems.

Routine uses of records maintained in the system, including categories of users and the purposes of such uses: Data in NCIC files is exchanged with and for the official use of authorized officials of the Federal Government, the States, cities, and penal and other institutions in accordance with title 28, U.S. code, section 534. The data is exchanged through NCIC lines to Federal criminal justice agencies, criminal justice agencies in the 50 States, the District of Columbia, Puerto Rico, U.S Possessions and U.S. Territories. Additionally, data contained in the various "want files," i.e., the stolen vehicle file, stolen license plate file, stolen/missing gun file, stolen article file,

wanted person file, sucurities file, and boat file may be accessed by the Royal Canadian Mounted Police. Dissemination of criminal history record information is set forth in Title 28 of the Code of Federal Regulations—Judicial Administration, Chapter I—Department of Justice (Order No. 601-75) Part 20—Criminal Justice Information Systems, Subpart C, Section 20.33.

Release of information to the news media: Information permitted to be released to the news media and the public pursuant to 28 C.F.R. 50.2 may be made available from systems of records maintained by the Department of Justice unless it is determined that release of the specific information in the context of a particular case would constitute an unwarranted invasion of personal privacy.

Release of information to Members of Congress: Information contained in systems of records maintained by the Department of Justice, not otherwise required to be released pursuant to 5 U.S.C. 552, may be made available to a Member of Congress or staff acting upon the Member's behalf when the Member or staff requests the information on behalf of and at the request of the individual who is the subject of the record.

Release of information to the National Archives and Records Service: A record from a system of records may be disclosed as a routine use to the National Archives and Records Service (NARS) in records management inspections conducted under the authority of 44 U.S.C. 2904 and 2906.

Policies and practices for storing, retrieving, accessing, retaining, and disposing of records in the system:

Storage: Information maintained in the NCIC system is stored electronically for use in a computer environment.

Retrievability: On-line access to data in NCIC is achieved by using the following search descriptors. 1. Vehicle file: (a) Vehicle identification number; (b) License plate number; (c) NCIC number (unique number assigned by the NCIC computer to each NCIC record). 2. License Plate file: (a) License plate number; (b) NCIC number. 3. Gun File: (a) Serial number of gun; (b) NCIC number. 4. Article File: (a) Serial number of article; (b) NCIC number. 5. Wanted Person File: (a) Name and one of the following numerical identifiers, date of birth, FBI number (number assigned by the Federal Bureau of Investigation to an arrest fingerprint record), Social Security number (It is noted the requirements of the Privacy Act with regard to the solicitation of Social Security numbers have been brought to the attention of the members of the NCIC system), Operator's license number (driver's license number), Miscellaneous identifying number (military number or number assigned by Federal, state, or local authorities to an individual's record), Originating agency case number, (b) Vehicle or license plate known to be in the possession of the wanted person; (c) NCIC number (unique number assigned to each NCIC record). 6. Securities File. (a) Type, serial number, denomination of security; (b) Type of security and name of owner of security; (c) Social Security number of owner of security, (d) NCIC number. 7. Boat File: (a) Registration document number; (b) Hull serial number; (c) NCIC number. 8. Computerized Criminal History File; (a) Name, sex, race, and date of birth; (b) FBI number, (c) State identification number; (d) Social Security number; (e) Miscellaneous number. 9. Missing Person file—Same as "Wanted Person" File.

Safeguards: Data stored in the NCIC is documented criminal justice agency information and access to that data is restricted to duly authorized criminal justice agencies. The following security measures are the minimum to be adopted by all criminal justice agencies having access to the NCIC Computerized Criminal History File. These measures are designed to prevent unauthorized access to the system data and/or unauthorized use of data obtained from the computerized file.

1. Computer Centers: a. The criminal justice agency computer site must have adequate physical security to protect against any unauthorized personnel gaining access to the computer equipment or to any of the stored data. b. Since personnel at these computer centers can access data stored in the system, they must be screened thoroughly under the authority and supervision of an NCIC control terminal agency. (This authority and supervision may be delegated to responsible criminal justice agency personnel in the case of a satellite computer center being serviced through a state control terminal agency.) This screening will also apply to non-criminal justice maintenance or technical personnel. c. All visitors to these computer centers must be accompanied by staff personnel at all times. d. Computers having access to the NCIC must have the proper computer instructions written and other built-in controls to prevent criminal history data from being accessible to any terminals other than authorized terminals. e. Computers having access to the NCIC must maintain a record of all transactions against the criminal history file in the same manner the NCIC computer logs all transactions. The NCIC identifies each specific agency entering or receiving information and maintains a record of those transactions. This transaction record must be monitored and reviewed on a regular basis to detect any possible misuse of criminal history data. f. Each state control terminal shall build its data system around a central computer, through which each inquiry must pass for screening and verification. The configuration and operation of the center shall provide for the integrity of the data base.

2. Communications: a. Lines/channels being used to transmit criminal history information must be dedicated solely to criminal justice use, i.e., there must be no terminals belonging to agencies outside the criminal justice system sharing these lines/channels. b. Physical security of the lines/channels must be protected to guard against clandestine devices being utilized to intercept or inject system traffic.

3. Terminal Devices Having Access to NCIC: a. All agencies having terminals on the system must be required to physically place these terminals in secure locations within the authorized agency. b. The agencies having terminals with access to criminals history must have terminal operators screened and restrict access to the terminal to a minimum number of authorized employees. c. Copies of criminal history data obtained from terminal devices must be afforded security to prevent any unauthorized access to or use of that data. d. All remote terminals on NCIC Computerized Criminal History will maintain a hard copy of computerized criminal history inquiries with notations of individual making request for record (90 days).

Retention and disposal: Unless otherwise removed, records will be retained in file as follows:

1. Vehicle File: a. Unrecovered stolen vehicle records (including snowmobile records) which do not contain vehicle identification numbers (VIN) therein, will be purged from file 90 days after the end of the license plate's expiration year as shown in the record. Unrecovered stolen vehicle records (including snowmobile records) which contain VIN's will remain in file for the year of entry plus 4. b. Unrecovered vehicles wanted in conjunction with a felony will remain in file for 90 days after entry. In the event a longer retention period is desired, the vehicle must be reentered. c. Unrecovered stolen VIN plates, certificates of origin or title, and serially numbered stolen vehicle engines or transmissions will remain in file for the year of entry plus 4.

2. License Plate File: Unrecovered stolen license plates not associated with a vehicle will remain in file for one year after the end of the plate's expiration year as shown in the record.

3. Gun File: a. Unrecovered weapons will be retained in file for an indefinite period until action is taken by the originating agency to clear the record. b. Weapons entered in file as "recovered" weapons will remain in file for the balance of the year entered plus 2.

4. Article File: Unrecovered stolen articles will be retained for the balance of the year entered plus one year.

5. Wanted Person File: Persons not located will remain in file indefinitely until action is taken by the originating agency to clear the record (except "Temporary Felony Wants", which will be automatically removed from file after 48 hours).

6. Securities File: Unrecovered, stolen, embezzled, counterfeited or missing securities will be retained for the balance of the year entered plus 4, except for travelers checks and money orders, which will be retained for the balance of the year entered plus 2.

7. Boat File: Unrecovered stolen boats will be retained in file for the balance of the year entered plus 4.

8. Missing Person File: Will remain in the file until the individual is located or, in the case of unemancipated persons, the individual reaches the age of emancipation as defined by laws of his state.

9. Computerized Criminal History File: When an individual reaches age of 80.

System manager(s) and address: Director, Federal Bureau of Investigation; J. Edgar Hoover F.B.I. Building, 9th and Pennsylvania Avenue N.W., Washington, D.C. 20535.

Notification procedure: Same as the above.

Record access procedures: It is noted the Attorney General is exempting this system from the access and contest procedures of the Privacy Act. However, the following alternative procedures are available to a requester. The procedures by which an individual may obtain a copy of his Computerized Criminal History are as follows:

If an individual has a criminal record supported by fingerprints and that record has been entered in the NCIC CCH File, it is available to that individual for review, upon presentation of appropriate identification, and in accordance with applicable State and Federal administrative and statutory regulations.

Appropriate identification includes being fingerprinted for the purpose of insuring that he is the individual that he purports to be. The record on file will then be verified as his through comparison of fingerprints.

Procedure 1. All requests for review must be made by the subject of his record through a law enforcement agency which has access to the NCIC CCH File. That agency within statutory or regulatory limits can require additional identification to assist in securing a positive identification.

2. If the cooperating law enforcement agency can make an identification with fingerprints previously taken which are in file locally and if the FBI identification number of the individual's record is available to that agency, it can make an on-line inquiry of NCIC to obtain his record on-line or, if it does not have suitable equipment to obtain an on-line response, obtain the record from Washington, D.C., by mail. The individual will then be afforded the opportunity to see that record.

3. Should the cooperating law enforcement agency not have the individual's fingerprints on file locally, it is necessary for that agency to relate his prints to an existing record by having his identification prints compared with those already on file in the FBI or possibly, in the State's central identification agency.

Contesting record procedures: The subject of the requested record shall request the appropriate arresting agency, court, or correctional agency to initiate action necessary to correct any stated inaccuracy in his record or provide the information needed to make the record complete.

Record source categories: Information contained in the NCIC system is obtained from local, State, Federal and international criminal justice agencies.

Systems exempted from certain provisions of the act: The Attorney General has exempted this system from subsections (c) (3) and (4), (d), (e) (1), (2) and (3), (e)(4) (G), (H), (e)(8) (f), and (m) of the Privacy Act pursuant to 5 U.S.C. 552a(j). Rules have been promulgated in accordance with the requirements of 5 U.S.C. 553 (b), (c) and (e) and have been published in the Federal Register.

JUSTICE/FBI-002

System name: The FBI Central Records System.

System location: a. Federal Bureau of Investigation, J. Edgar Hoover FBI Building, 10th and Pennsylvania Avenue NW., Washington, D.C. 20535; b. 59 field divisions (see Appendix); c. 12 Legal Attaches (see Appendix).

Categories of individuals covered by the system: a. Individuals who relate in any manner to official FBI investigations including, but not limited to suspects, victims, witnesses, and close relatives and associates that are relevant to an investigation.

b. Applicants for and current and former personnel of the FBI and persons related thereto that are considered relevant to an applicant investigation, personnel inquiry, or persons related to personnel matters.

c. Applicants for and appointees to sensitive positions in the United States Government and persons related thereto that are considered relevant to the investigation.

d. Individuals who are the subject of unsolicited information, who offer unsolicited information, request assistance, and make inquiries concerning record material, including general correspondence, contacts with other agencies, businesses, institutions, clubs, the public and the news media.

e. Individuals, associated with administrative operations or services including pertinent functions, contractors and pertinent persons related thereto.

(All manner of information concerning individuals may be acquired in connection with and relating to the varied investigative responsibilities of the FBI which are further described in "Categories of Records in the System." Depending on the nature and scope of the investigation this information may include, among other things, personal habits and conduct, financial information, travel and organizational affiliation of individuals. The information collected is made a matter of record and placed in FBI files.)

Categories of records in the system:

The FBI Central Records System—The FBI utilizes a central records system of maintaining its investigative, personnel, applicant, administrative, and general files. This system consists of one numerical sequence of subject matter files, an alphabetical index to the files, and a supporting abstract system to facilitate processing and accountability of all important mail placed in file. Files kept in FBI field offices are also structured in the same manner, except they do not utilize an abstract system.

The FBI has 210 classifications used in its basic filing system. They pertain primarily to Federal violations over which the FBI has investigative jurisdiction. However, included in the 210 classifications are personnel, applicant, and administrative matters to facilitate the overall filing scheme. These classifications are as follows (the word "obsolete" following the name of the classification indicates the FBI is no longer initiating investigative cases in these matters, although the material is retained for reference purposes):

1. Training Schools; National Academy Matters; FBI National Academy Applicants. Covers general information concerning the FBI National Academy, including background investigations of individual candidates.

2. Neutrality Matters. Title 18, United States Code, Sections 956 and 958–962; Title 22, United States Code, Sections 1934 and 401.

3. Overthrow or Destruction of the Government, Title 18, United States Code, Section 2385.

4. National Firearms Act; Federal Firearms Act; State Firearms Control Assistance Act; Unlawful Possession or Receipt of Firearms. Title 26, United States Code, Sections 5801–5812; Title 18, United States Code, Sections 921–928; Title 18, United States Code, Sections 1201–1203.

5. Income Tax. Covers violations of Federal income tax laws reported to the FBI. Complaints are forwarded to the Commissioner of the Internal Revenue Service.

6. Interstate Transportation of Strikebreakers. Title 18, United States Code, Section 1231.

7. Kidnaping. Title 18, United States Code, Sections 1201 and 1202.

8. Migratory Bird Act. Title 18, United States Code, Section 43; Title 16, United States Code, Sections 703 through 718.

9. Extortion. Title 18, United States Code, Sections 876, 877, 875, and 873.

10. Red Cross Act. Title 18, United States Code, Sections 706 and 917.

11. Tax (Other than Income). This classification covers complaints concerning violations of Internal Revenue laws as they apply to other than alcohol, social security and income and profits taxes, which are forwarded to the Internal Revenue Service.

12. Narcotics. This classification covers complaints received by the FBI concerning alleged violations of Federal drug laws. Complaints are forwarded to the Administrator, Drug Enforcement Administration (DEA), or the nearest district office of DEA.

13. Miscellaneous. Section 125, National Defense Act; Prostitution; Selling Whiskey Within Five Miles Of An Army Camp. 1920 only. Subjects were alleged violators of abuse of U.S. flag, fraudulent enlistment, selling liquor and operating houses of prostitution within restricted bounds of military reservations. Violationis of Section 13 of the Selective Service Act (Conscription Act) were enforced by the Department of Justice as a war emergency measure with the Bureau exercising jurisdiction in the detection and prosecution of cases within the purview of that Section.

14. Sedition. Title 18, United States Code, Sections 2387, 2388, and 2391.

15. Theft from Interstate Shipment. Title 18, United States Code, Section 659; Title 18, United States Code, Section 660; Title 18, United States Code, Section 2117.

16. Violation Federal injunction (obsolete). FBI records do not provide an explanation of the nature of this classification.

17. Veterans Administration Matters. Title 18, United States Code, Sections 287, 289, 290, 371, or 1001; and Title 38, United States Code, Sections 787(a), 787(b), 3405, 3501, and 3502.

18. May Act. Title 18, United States Code, Section 1384.

19. Censorship Matter (obsolete). Pub. L. 354, 77th Congress.

20. Federal Grain Standards Act. 1920 only. Subjects were alleged violators of contracts for sale, shipment of interstate commerce, Section 5, U.S. Grain Standards Act.

21. Food and Drugs. This classification covers complaints received concerning alleged violations of the Food, Drug and Cosmetic Act; Tea Act; Import Milk Act; Caustic Poison Act; and Filled Milk Act. These complaints are referred to the Commissioner of the Food and Drug Administration or the field component of that Agency.

22. National Motor Vehicle Traffic Act. 1922–27. Subjects possible violators of the National Motor Vehicle Theft Act; Automobiles seized by Prohibition Agents.

23. Prohibition. This classification covers complaints received concerning bootlegging activities and other violations of the alcohol tax laws. Such complaints are referred to the Bureau of Alcohol, Tobacco and Firearms, Department of the Treasury, or field representatives of that Agency.

24. Profiteering. 1920–42. Subjects are possible violators of the Lever Act—Profiteering in food and clothing or accused company was subject of file. Bureau conducted investigations to ascertain profits.

25. Selective Service Act; Selective Training and Service Act. Title 50, United States Code, Section 462; Title 50, United States Code, Section 459.

26. Interstate Transportation of Stolen Motor Vehicle; Interstate Transportation of Stolen Aircraft. Title 18, United States Code, Sections 2311 (in part), 2312, and 2313.

27. Patent Matter. Title 35, United States Code.

28. Copyright Matter. Title 17, United States Code, Sections 104 and 105.

29. Bank Fraud and Embezzlement. Title 18, United States Code, Sections 212, 213, 215, 334, 655–657, 1004–1006, 1008, 1009, 1014, and 1306; Title 12, United States Code, Section 1725(g).

30. Interstate Quarantine Law. 1922–25. Subjects alleged violators of Act of February 15, 1893, as amended, regarding interstate travel of persons afflicted with infectious diseases. Cases also involved unlawful transportation of animals, Act of February 2, 1903. Referrals were made to Public Health Service and the Department of Agriculture.

31. White Slave Traffic Act. Title 18, United States Code, Sections 2421–2424.

32. Identification (Fingerprint Matters). This classification covers general information concerning Identification (fingerprint) matters.

33. Uniform Crime Reporting. This classification covers general information concerning the Uniform Crime Reports, a periodic compilation of statistics of criminal violations throughout the United States.

34. Violation of Lacy Act. 1922–43. Unlawful transportation and shipment of black bass and fur seal skins.

35. Civil Service. This classification covers complaints received by the FBI concerning Civil Service matters which are referred to the United States Civil Service Commission in Washington or regional offices of that Agency.

36. Mail Fraud. Title 18, United States Code, Section 1341.

37. False Claims Against the Government. 1921–22. Subjects submitted claims for allotment, vocational training, compensation as veterans under the Sweet Bill. Letters were generally referred elsewhere (Veterans Bureau). Violators apprended for violation of Article No. 1, War Risk Insurance Act.

38. Application for Pardon to Restore Civil Rights. 1921–35. Subjects allegedly obtained their naturalization papers by fraudulent means. Cases later referred to Immigration and Naturalization Service.

39. Falsely Claiming Citizenship. Title 18, United States Code, Sections 911 and 1015(a)(b).

40. Passport and Visa Matter. Title 18, United States Code, Sections 1541–1546.

41. Explosives (obsolete). Title 50, United States Code, Sections 121 through 144.

42. Deserter; Deserter, Harboring. Title 10, United States Code, Sections 808 and 885.

43. Illegal Wearing of Uniforms; False Advertising or Misuse of Names, Words, Emblems or Insignia; Illegal Manufacture, Use, Possession, or Sale of Emblems and Insignia; Illegal Manufacture, Possession, or Wearing of Civil Defense Insignia; Miscellaneous, Forging or Using Forged Certificate of Discharge from Military or Naval Service; Miscellaneous, Falsely Making or Forging Naval, Military, or Official Pass; Miscellaneous, Forging or Counterfeiting Seal of Department or Agency of the United States; Misuse of the Great Seal of the United States or of the Seals of the President or the Vice President of the United States; Unauthorized Use of "Johnny Horizon" Symbol; Unauthorized Use of Smokey Bear Symbol. Title 18, United States Code, Sections 702, 703, and 704; Title 18, United States Code, Sections 701, 705, 707, and 710; Title 36, United States Code, Section 182; Title 50, Appendix, United States Code, Sections 2284; Title 46, United States Code, Section 249; Title 18, United States Code, Sections 498, 499, 506, 709, 711, 711a, 712, 713, and 714; Title 12, United States Code, Sections 1457 and 1723a; Title 22, United States Code, Section 2518.

44. Civil Rights; Civil Rights, Election Laws, Voting Rights Act, 1965, Title 18, United States Code, Sections 241, 242, and 245; Title 42, United States Code, Section 1973, Title 18, United States Code, Section 243; Title 18, United States Code, Section 244, Civil Rights Act—Federally Protected Activities; Civil Rights Act—Overseas Citizens Voting Rights Act of 1975.

45. Crime on the High Seas (Includes stowaways on boats and aircraft). Title 18, United States Code, Sections 7, 13, 1243, and 2199.

46. Fraud Against the Government; Anti-Kickback Statute; Dependent Assistance Act of 1950; False Claims, Civil; Federal-Aid Road Act; Lead and Zinc Act; Public Works and Economic Development Act of 1965; Renegotiation Act, Criminal; Renegotiation Act, Civil; Trade Expansion Act of 1962; Unemployment Compensation Statutes; Economic Opportunity Act. Title 50, United States Code, Section 1211 et seq.; Title 31, United States Code, Section 231; Title 41, United States Code, Section 119; Title 40, United States Code, Section 489.

47. Impersonation. Title 18, United States Code, Sections 912, 913, 915, and 916.

48. Postal. Violation (Except Mail Fraud). This classification covers inquiries concerning the Postal Service and complaints pertaining to the theft of mail. Such complaints are either forwarded to the Postmaster General or the nearest Postal Inspector.

49. National Bankruptcy Act. Title 18, United States Code, Sections 151–155.

50. Involuntary Servitude and Slavery. U.S. Constitution, 13th Amendment; Title 18, United States Code, Sections 1581–1588, 241, and 242.

51. Jury Panel Investigations. This classification covers jury panel investigations which are requested by the appropriate Assistant Attorney General as authorized by 28 U.S.C. 533 and AG memorandum #781, dated 11/9/72. These investigations can be conducted only upon such a request and consist of an indices and arrest check, and only in limited important trials where defendant could have influence over a juror.

52. Theft, Robbery, Embezzlement, Illegal Possession or Destruction of Government Property. Title 18, United States Code, Sections 641, 1024, 1660, 2112, and 2114. Interference With Government Communications, Title 18, U.S.C., Section 1632.

53. Excess Profits On Wool. 1918. (obsolete) Subjects possible violator of Government Control of Wool Clip of 1918.

54. Customs Laws and Smuggling. This classification covers complaints received concerning smuggling and other matters involving importation and entry of merchandise into and the exportation of merchandise from the United States. Complaints are referred to the nearest district office of the U.S. Customs Service or the Commissioner of Customs, Washington, D.C.

55. Counterfeiting. This classification covers complaints received concerning alleged violations of counterfeiting of U.S. coins, notes, and other obligations and securities of the Government. These complaints are referred to either the Director, U.S. Secret Service, or the nearest office of that Agency.

56. Election Laws. Title 18, United States Code, Sections 241, 242, 245, 591, 592, 593, 594, 595, 596, 597, 598, 599, 600, 601, 602, 603, 604, 605, 606, and 607; Title 42, United States Code, Section 1973; Title 26, United State Code, Sections 9012 and 9042; title 2, United States Code, Sections 431, 432, 433, 434, 435, 436, 437, 439, and 441.

57. War Labor Dispute Act (obsolete). Pub. L. 89—77th Congress.

58. Bribery; Conflict of Interest. Title 18, United States Code, Sections 201–203, 205–211; Pub. L. 89–4 and 89–136.

59. World War Adjusted Compensation Act 1924–44. Bureau of Investigation was charged with the duty of investigating alleged violations of all sections of the World War Adjusted Compensation Act (Pub. L. 472, 69th Congress (H.R. 10277)) with the exception of section 704.

60. Anti-Trust. Title 15, United States Code, Sections 1–7, 12–27, and 13.

61. Treason or Misprison of Treason. Title 18, United States Code, Sections 2381, 2382, 2389, 2390, 756, and 757.

62. Administrative Inquiries. Misconduct Investigations of Officers and Employees of the Department of Justice and Federal Judiciary; Census Matters (Title 13, United States Code, Sections 211–214, 221–224, 304, and 305) Domestic Police Cooperation; Eight-Hour-Day Law (Title 40, United States Code, Sections 321, 322, 325a, 326); Fair Credit Reporting Act (Title 15, United States Code, Sections 1681q and 1681r); Federal Cigarette Labeling and Advertising Act (Title 15, United States Code, Section 1333); Federal Judiciary Investigations; Kickback Racket Act (Title 18, United States Code, Section 874); Lands Division Matter; Other Violations and/or Matters; Civil Suits—Miscellaneous; Soldiers' and Sailors' Civil Relief Act of 1940 (Title 50, Appendix, United States Code, Sections 510–590); Tariff Act of 1930 (Title 19, United States Code, Section 1304); Unreported Interstate Shipment of Cigarettes (Title 15, United States Code, Sections 375 and 376); Fair Labor Standards Act of 1938 (Wage and Hour Law) (Title 29, United States Code, Sections 2010219); conspiracy (Title 18, United States Code, Section 371 (formerly Section 88, title 18, United States Code); effective September 1, 1948).

63. Miscellaneous—Nonsubversive. This classification concerns correspondence from the public which does not relate to matters within FBI jurisdiction.

64. Foreign Miscellaneous. This classification is a control file utilized as a repository for intelligence information of value identified by country. More specific categories are place in classification 108–113.

65. Espionage. Attorney General Guidelines on Foreign Counterintelligence; Internal Security Act of 1950; Executive Order 11905.

66. Administrative Matters. This classification covers such items as supplies, automobiles, salary matters and vouchers.

67. Personnel Matters. This classification concerns background investigations of applicants for employment with the FBI.

68. Alaskan Matters (obsolete). This classification concerns FBI investigations in the Territory of Alaska prior to its becoming a State.

69. Contempt of Court Title 18, United States Code, Sections 401, 402, 3285, 3691, 3692; Title 10, United States Code, Section 847; and Rule 42, Federal Rules of Criminal Procedure.

70. Crime on Government Reservation; Title 18, United States Code, Sections 7 and 13.

71. Bills of Lading Act. Title 49, United States Code, Section 121.

72. Obstruction of Criminal Investigations. Title 18, United States Code, Sections 1503 through 1510.

73. Application for pardon After Completion of Sentence and Application for Executive Clemency. This classification concerns the FBI's background investigation in connection with pardon applications and requests for executive clemency.

74. Perjury. Title 18, United States Code, Sections 1621, 1622, and 1623.

75. Bondsmen and Sureties. Title 18, United States Code, Section 1506.

76. Escaped Federal Prisoner; Escape and Rescue; Probation Violator; Parole violator; Mandatory Release Violator. Title 18, United States Code, Sections 751–757, 1072; Title 18, United States Code, Sections 3651–3656; and Title 18, United States Code, Sections 4202–4207, 5037, and 4161–4166.

77. Applicants (Special Inquiry, Departmental and Other Government Agencies, except those having special classifications). This classification covers the background investigations conducted by the FBI in connection with the aforementioned positions.

78. Illegal Use of Government Transportation Requests. Title 18, United States Code, Sections 287, 495, 508, 641, 1001 and 1002.

79. Missing Persons. This classification covers the FBI's Identification Division's assistance in the locating of missing persons.

80. Laboratory Research Matters. At FBI Headquarters this classification is used for Laboratory research matters. In field office files this classification covers the FBI's public affairs matters and involves contact by the FBI with the general public, Federal and State agencies, the Armed Forces, corporations, the news media and other outside organizations.

81. Gold Hoarding. 1933–45. Gold Hoarding investigations conducted in accordance with an Act of March 9, 1933 and Executive Order issued August 28, 1933. Bureau instructed by Department to conduct no further investigations in 1935 under the Gold Reserve Act of 1934. Thereafter, all correspondence referred to Secret Service.

82. War Risk Insurance (National Life Insurance) (obsolete). This classification covers investigations conducted by the FBI in connection with civil suits filed under this statute.

83. Court of Claims. This classification covers requests for investigation of cases pending in the Court of Claims from the Assistant Attorney General in charge of the Civil Division of the Department of Justice.

84. Reconstruction Finance Corporation Act (obsolete). Title 15, United States Code, Chapter 14.

85. Home Owner Loan Corporation (obsolete). This classification concerned complaints received by the FBI about alleged violations of the Home Owners Loan Act, which were referred to the Home Owners Loan Corporation. Title 12, United States Code, Section 1464.

86. Federal Lending and Insurance Agencies. Title 15, United States Code, Section 645; Title 18, United States Code, Sections 212, 213, 215, 216, 217, 657, 658, 1006, 1011, 1013, 1014, 1907, 1908 and 1909.

87. Interstate Transportation of Stolen Property (Fraud by wire, Radio, or Television). Title 18, United States Code, Sections 2311, 2314, 2315, and 2318.

88. Unlawful Flight to Avoid Prosecution, Custody, or Confinement; Unlawful Flight to Avoid Giving Testimony. Title 18, United States Code, Sections 1073 and 1074.

89. Assaulting or Killing a Federal Officer, Congressional Assassination Statute. Title 18, United States Code, Sections 111, 1114, 2232.

90. Irregularities in Federal Penal Institutions. Title 18, United States Code, Sections 1791 and 1792.

91. Bank Burglary; Bank Larceny; Bank Robbery. Title 18, United States Code, Section 2113.

92. Anti-Racketeering; Title 18, United States Code, Section 3237.

93. Ascertaining Financial Ability. This classification concerns requests by the Department of Justice for the FBI to ascertain a person's ability to pay a claim, fine or judgement obtained against him by the United States Government.

94. Research Matters. This classification concerns all general correspondence of the FBI with private individuals which does not involve any substantive violation of Federal law.

95. Laboratory Cases (Examination of Evidence in Other Than Bureaus Cases). This classification concerns non-FBI cases where a duly constituted State,, county or a municipal law enforcement agency in a criminal matter has requested an examination of evidence by the FBI Laboratory.

96. Alien Applicant (obsolete). Title 10, United States Code, Section 310.

97. Foreign Agents Registration Act. Title 18, United States Code, Section 951; Title 22, United States Code, Sections 611–621; Title 50, United States Code, Sections 851–857.

98. Sabotage. Title 18, United States Code, Sections 2151–2156; Title 50, United States Code, Section 797.

99. Plant Survey (obsolete). This classification covers a program where in the FBI inspected industrial plants for the purpose of making suggestions to the operators of those plants to prevent espionage and sabotage.

100. Domestic Security. This classification covers investigations by the FBI in the domestic security field, e.g., Smith Act violations.

101. Hatch Act (obsolete). Pub. L. 252. 76th Congress.

102. Voorhis Act. Title 18, United States Code, Section 1386.

103. Interstate Transportation of Stolen Cattle. Title 18, United States Code, Sections 2311, 2316 and 2317.

104. Servicemen's Dependents Allowance Act of 1942 (obsolete). Pub. L. 625, 77th Congress, Sections 116–119.

105. Foreign Counterintelligence Matters. Attorney General Guidelines on Foreign Counterintelligence. Executive Order 11905.

106. Alien Enemy Control; Escaped Prisoners of War and Internees. 1944–55. Suspects were generally suspected escaped prisoners of war, members of foreign organizations, failed to register under the Alien Registration Act. Cases ordered closed by Attorney General after alien enemies returned to their respective countries upon termination of hostilities.

107. Denaturalization Proceedings (obsolete). This classification covers investigations concerning allegations that an individual fraudulently swore allegiance to the United States or in some other manner illegally obtained citizenship to the U.S., Title 8, United States Code, Section 738.

108. Foreign Travel Control (obsolete). This classification concerns security-type investigations wherein the subject is involved in foreign travel.

109. Foreign Political Matters. This classification is a control file utilized as a repository for intelligence information concerning foreign political matters broken down by country.

110. Foreign Economic Matters. This classification is a control file utilized as a repository for intelligence information concerning foreign economic matters broken down by country.

111. Foreign Social Conditions. This classification is a control file utilized as a repository for intelligence information concerning foreign social conditions broken down by country.

112. Foreign Funds. This classification is a control file utilized as a repository for intelligence information concerning foreign funds broken down by country.

113. Foreign Military and Naval Matters. This classification is a control file utilized as a repository for intelligence information concerning foreign military and naval matters broken down by country.

114. Alien Property Custodian Matter (obsolete). Title 50, United States Code, Sections 1 through 38. This classification covers investigations concerning ownership and control of property subject to claims and litigation under this statute.

115. Bond Default; Bail Jumper. Title 18, United States Code, Sections 3146–3152.

116. Department of Energy Applicant; Department of Energy, Employee. This classification concerns background investigations conducted in connection with employment with the Department of Energy.

117. Department of Energy, Criminal. Title 42, United States Code, Sections 2011–2281; Pub. L. 93–438.

118. Applicant, intelligence Agency (obsolete). This classification covers applicant background investigations conducted of persons under consideration for employment by the Central Intelligence Group.

119. Federal Regulations of Lobbying Act. Title 2, United States Code, Sections 261–270.

120. Federal Tort Claims Act. Title 28, United States Code, Sections 2671 to 2680. Investigations are conducted pursuant to specific request from the Department of Justice in connection with cases in which the Department of Justice represents agencies sued under the Act.

121. Loyalty of Government Employees (obsolete). Executive Order 9835.

122. Labor Management Relations Act, 1947. Title 29, United States Code, Sections 161, 162, 176–178 and 186.

123. Special Inquiry, State Department, Voice of America (U.S. Information Center) (Pub. L. 402, 80th Congress). (obsolete) This classification covers loyalty and security investigations on personnel

employed by or under consideration for employment for Voice of America.

124. European Recovery Program (International Cooperation Administration), formerly Foreign Operations Administration, Economic Cooperation Administration or E.R.P., European Recovery Programs; A.I.D., Agency for International Development (obsolete). This classification covers security and loyalty investigations of personnel employed by or under consideration for employment with the European Recovery Program. Pub. L. 472, 80th Congress.

125. Railway Labor Act; Railway Labor Act—Employer's Liability Act. Title 45, United States Code, Sections 151-163 and 181-188.

126. National Security Resources Board, Special Inquiry (obsolete). This classification covers loyalty investigations on employees and applicants of the National Security Resources Board.

127. Sensitive Positions in the United States Government, Pub. L. 266 (obsolete). Pub. L. 266, 81st Congress.

128. International Development Program (Foreign Operations Administration). (obsolete) This classification covers background investigations conducted on individuals who are to be assigned to duties under the International Development Program.

129. Evacuation Claims (obsolete). Pub. L. 886, 80th Congress.

130. Special Inquiry, Armed Forces Security Act (obsolete). This classification covers applicant-type investigations conducted for the Armed Forces security agencies.

131. Admiralty Matter. Title 46, United States Code, Sections 741 to 752 and 781 to 799.

132. Special Inquiry, Office of Defense Mobilization (obsolete). This classification covers applicant-type investigations of individuals associated with the Office of Defense Mobilization.

133. National Science Foundation Act, Applicant (obsolete). Pub. L. 507, 81st Congress.

134. Foreign Counterintelligence Assets. This classification concerns individuals who provide information to the FBI concerning Foreign Counterintelligence matters.

135. PROSAB (Protection of Strategic Air Command Bases of the U.S. Air Force). (obsolete) This classification covered contacts with individuals with the aim to develop information useful to protect bases of the Strategic Air Command.

136. American Legion Contact (obsolete). This classification covered liaison contacts with American Legion officers.

137. Informants, Other than Foreign Counterintelligence Assets. This classification concerns individuals who furnish information to the FBI concerning criminal violations on a continuing and confidential basis.

138. Loyalty of Employees of the United Nations and Other Public International Organizations. This classification concerns FBI investigations based on referrals from the Civil Service Commission wherein a question or allegation has been received regarding the applicant's loyalty to the U.S. Government as described in Executive Order 10422.

139. Interception of Communications (Formerly, Unauthorized Publication or Use of Communications). Title 47, United States Code, Section 605; Title 47, United States Code, Section 501; Title 18, United States Code, Sections 2510-2513.

140. Security of Government Employees; S.G.E., Fraud Against the Government. Executive Order 10450.

141. False Entries in Records of Interstate Carriers. Title 47, United States Code, Section 220; Title 49, United States Code, Section 20.

142. Illegal Use of Railroad Pass. Title 49, United States Code, Section 1.

143. Interstate Transportation of Gambling Devices. Title 15, United States Code, Sections 1171 through 1180.

144. Interstate Transportation of Lottery Tickets. Title 18, United States Code, Section 1301.

145. Interstate Transportation of Obscene Matter; Broadcasting Obscene Language. Title 18, United States Code, Sections 1462, 1464 and 1465.

146. Interstate Transportation of Prison-Made Goods. Title 18, United States Code, Sections 1761 and 1762.

147. Department of Housing and Urban Development. Matters. Title 18, United States Code, Sections 1010, 709, 657, and 1006; Title 12, United States Code, Sections 1715 and 1709.

148. Interstate Transportation of Fireworks. Title 18, United States Code, Section 836.

149. Destruction of Aircraft or Motor Vehicles. Title 18, United States Code, Sections 31 through 35.

150. Harboring of Federal Fugitives, Statistics.

151. (Referral cases received from CSC under Pub. L. 298). Agency for International Development; Department of Energy (Civil Service Commission); National Aeronautics and Space Administration; National Science Foundation; Peace Corps.; Action; U.S. Arms Control and Disarmament Agency; World Health Organization; International Labor Organization; U.S. Information Agency. This classification covers referrals from the Civil Service Commission where an allegation has been received regarding an applicant's loyalty to the U.S. Government. These referrals refer to applicants from Peace Corps., Department of Energy, National Aeronautics and Space Administration, Nuclear Regulatory Commission, United States Arms Control and Disarmament Agency and the United States Information Agency.

152. Switchblade Knife Act. Title 15, United States Code, Sections 1241 through 1244.

153. Automobile Information Disclosure Act. Title 15, United States Code, Sections 1231, 1232 and 1233.

154. Interstate Transportation of Unsafe Refrigerators. Title 15, United States Code, Sections 1211 through 1214.

155. National Aeronautics and Space Act of 1958. Title 18, United States Code, Section 799.

156. Employee Retirement Income Security Act. Title 29, United States Code, Sections 1021-1029, 1111, 1131, and 1141; Title 18, United States Code, Sections 644, 1027, and 1954.

157. Civil Unrest. This classification concerns FBI responsibility for reporting information on civil disturbances or demonstrations. The FBI's investigative responsibility is based on the Attorney General's Guidelines for Reporting on Civil Disorders and Demonstrations Involving a Federal Interest which became effective April 5, 1976.

158. Labor-Management Reporting and Disclosure Act of 1959 (Security Matter) (obsolete). Pub. L. 86-257, Section 504.

159. Labor-Management reporting and Disclosure Act of 1959 (Investigative Matter). Title 29, United States Code, Sections 501, 503, 504, 522, and 530.

160. Federal Train Wreck Statute. Title 18, United States Code, Section 1992.

161. Special Inquiries for White House, Congressional Committee and Other Government Agencies. This classification covers investigations requested by the White House, Congressional committees or other Government agencies.

162. Interstate Gambling Activities. This classification covers information acquired concerning the nature and scope of illegal gambling activities in each field office.

163. Foreign Police Cooperation. This classification covers requests by foreign police for the FBI to render investigative assistance to such agencies.

164. Crime Aboard Aircraft. Title 49, United States Code, Sections 1472 and 1473.

165. Interstate Transmission of Wagering Information. Title 18, United States Code, Section 1084.

166. Interstate Transportation in Aid of Racketeering. Title 18, United States Code, Section 1952.

167. Destruction of Interstate Property. Title 15, United States Code, Sections 1281 and 1282.

168. Interstate Transportation of Wagering Paraphernalia. Title 18, United States Code, Section 1953.

169. Hydraulic Brake Fluid Act (obsolete); 76 Stat. 437, Pub. L. 87-637.

170. Extremist Informants (obsolete). This classification concerns individuals who provided information on a continuing basis on various extremist elements.

171. Motor Vehicle Seat Belt Act (obsolete). Pub. L. 88-201, 80th Congress.

172. Sports Bribery. Title.

173. Public Accommodations, Civil Rights Act of 1964 Public Facilities, Civil Rights Act of 1964 Public Education, Civil Rights Act of 1964 Employment, Civil Rights Act of 1964. Title 42, United States Code, Section 2000; Title 18, United States Code, Section 245.

174. Explosives and Incendiary Devices; Bomb Threats (Formerly, Bombing Matters; Bombing Matters, Threats). Title 18, United States Code, Section 844.

175. Assaulting the President (or Vice President) of the United States. Title 18, United States Code, Section 1751.

176. Anti-riot Laws. Title 18, United States Code, Section 245.

177. Discrimination in Housing. Title 42, United States Code, Sections 3601-3619 and 3631.

178. Interstate Obscene or Harassing Telephone Calls. Title 47, United States Code, Section 223.

179. Extortionate Credit Transactions. Title 18, United States Code, Sections 891-896.

180. Desecration of the Flag. Title 18, United States Code, Section 700.

181. Consumer Credit Protection Act. Title 15, United States Code, Section 1611.

182. Illegal Gambling Business; Illegal Gambling Business, Obstruction; Illegal Gambling Business, Forfeiture. Title 18, United

States Code, Section 1955; Title 18, United States Code, Section 1511.

183. Racketeer, Influence and Corrupt Organizations. Title 18, United States Code, Sections 1961-1968.

184. Police Killings. This classification concerns investigations conducted by the FBI upon written request from local Chief of Police or duly constituted head of the local agency to actively participate in the investigation of the killing of a police officer. These investigations are based on a Presidential Directive dated June 3, 1971.

185. Protection of Foreign Officials and Officials Guests of the United States. Title 18, United States Code, Sections 112, 970, 1116, 1117 and 1201.

186. Real Estate Settlement Procedures Act of 1974. Title 12, United States Code, Section 2602; Title 12, United States Code, Section 2606; and Title 12, United States Code, Section 2607.

187. Privacy Act of 1974, Criminal. Title 5, United States Code, Section 552a.

188. Crime Resistance. This classification covers FBI efforts to develop new or improved approaches, techniques, systems, equipment and devices to improve and strengthen law enforcement as mandated by the Omnibus Crime Control and Safe Streets Act of 1968.

189. Equal Credit Opportunity Act. Title 15, United States Code, Section 1691.

190. Freedom of Information/Privacy Acts. This classification covers the creation of a correspondence file to preserve and maintain accurate records concerning the handling of requests for records submitted pursuant to the Freedom of Information—Privacy Acts.

191. False Identify Matters. This classification covers the FBI's study and examination of criminal elements efforts to create false identities.

192. Hobbs Act—Financial Institutions. Title 18, United States Code, Section 1951.

193. Hobbs Act—Commerical Institutions. Title 18, United States Code, Section 1951; and Title 47, United States Code, Section 506.

194. Hobbs Act—Corruption of Public Officials. Title 18, United States Code, Section 1951.

195. Hobbs Act—Labor Related. Title 18, United States Code, Section 1951.

196. Fraud by Wire. Title 18, United States Code, Section 1343.

197. Civil Actions or Claims Against the Government. This classification covers all civil suits involving FBI matters and most administrative claims filed under the Federal Tort Claims Act arising from FBI activities.

198. Crime on Indian Reservations. Title 18, United States Code, Sections 1151, 1152, and 1153.

199. Foreign Counterintelligence—Terrorism. Attorney General Guidelines on Foreign Counterintelligence. Executive Order 11905.

200. Foreign Counterintelligence Matters. Attorney General Guidelines on Foreign Counterintelligence. Executive Order 11905.

201. Foreign Counterintelligence Matters. Attorney General Guidelines on Foreign Counterintelligence. Executive Order 11905.

202. Foreign Counterintelligence Matters. Attorney General Guidelines on Foreign Counterintelligence. Executive Order 11905.

203. Foreign Counterintelligence Matters. Attorney General Guidelines on Foreign Counterintelligence. Executive Order 11905.

204. Federal Revenue Sharing. This classification covers FBI investigations conducted where the Attorney General has been authorized to bring civil action whenever he has reason to believe that a pattern or practice of discrimination in disbursement of funds under the Federal Revenue Sharing statute exists.

205. Foreign Concept Practices Act of 1977. Title 15, United States Code, Section 78.

206. Fraud Against the Government—Department of Defense. (See classification 46 (supra) for statutory authority for this and the four following classifications).

207. Fraud Against the Government—Environmental Protection Agency.

208. Fraud Against the Government—General Services Administration.

209. Fraud Against the Government—Department of Health, Education and Welfare.

210. Fraud Against the Government—Department of Labor.

Title of index	Description and use	Status of index	Maintained at—	
			Headquarters	Field office
Administrative Index (ADEX)	Consists of cars with descriptive data on individuals who were subject to investigation in a national emergency because they believed to constitute a potential or active threat to the internal security of the United States. When ADEX was started in 1971, it was made up of people who were formerly on the Security Index, Reserve Index, and Agitator Index. The index is maintained in two separate locations in FBI Headquarters. ADEX was discontinued in January 1976. The computer section of the FBI has in storage on computer tape all the individuals who were on ADEX when it was discontinued.	Inactive	Yes	Yes (29)
Anonymous Letter File	*Consists of photographs of anonymous communications and extortionate credit transactions; kidnapping, extortion and threatening letters.*	*Active*	*Yes*	*No*
Associates of DEA Class I Narcotics Violators Listing.	Consists of a computer listing of individuals whom DEA has identified as associates of Class I Narcotics Violators.	Active	Yes	Yes (59)
Background Investigation Index—Department of Justice.	Consists of cards on persons who have been the subject of a full field investigation in connection with their consideration for employment in sensitive positions with Department of Justice, such as U.S. Attorney, Federal judge, or a high level Departmental position.	Active	Yes	No
Background Investigation Index—White House, Other Executive Agencies, and Congress.	Consists of cards on persons who have been the subject of a full field investigation in connection with their consideration for employment in sensitive positions with the White House, Executive agencies (other than the Department of Justice) and the Congress.	Active	Yes	No
Bank Fraud and Embezzlement Index	Consists of individuals who have been the subject of "Bank Fraud and Embezzlement" investigation. This file is used as an investigative aid.	Active	No	Yes (1)
Bank Robbery Album	Consists of photos of bank robbers, burglarers, and larency subjects. In some field offices it will also contain pictures obtained from local police departments of known armed robbers and thus potential bank robbers. This index is used to develop investigative leads in bank robbery cases and may also be used to show to witnesses of bank robberies. It is usually filed by race, height, and age. This index is also maintained in one resident agency (a suboffice of a field office).	Active	No	Yes (47)
Bank Robbery Nickname Index	Consists of nicknames used by known bank robbers. The index card on each would contain the real name and method of operation and are filed in alphabetical order.	Active	No	Yes (1)
Bank Robbery Note File	Consists of photographs of notes used in bank robberies in which the suspect has been identified. This index is used to help solve robberies in which the suspect has not been identified but a note was left. The note is compared with the index to try to match the sentence structure and handwriting for the purpose of identifying possible suspects.	Active	Yes	No
Bank Robbery Suspect Index	Consists of a control file or index cards with photos, if available, or bank robbers of burglars. In some field offices these people may be part of the bank robbery album. This index is generally maintained and used in the same manner as the bank robbery album.	Active	No	Yes (33)
Car Ring Case Photo Album	Consists of photos of subject and suspects involved in a large car theft ring investigation. It is used as an investigative aid.	Active	No	Yes (3)
Car Ring Case Photo Album and Index	Consists of photos of subjects and suspects involved in a large car theft ring investigation. The card index maintained in addition to the photo album contains the names and addresses appearing on fraudulent title histories for stolen vehicles. Most of these names appearing on these titles are fictitious. Both the photo album and card indexes are used as an investigative aid.	Active	No	Yes (1)
Car Ring Case Toll Call Index	Consists of cards with information on persons who subscribe to telephone numbers to which toll calls have been placed by the major subjects of a large car theft ring investigation. It is maintained numerically by telephone number. It is used to facilitate the development of probable cause for a court-approved wiretap.	Active	No	Yes (2)

Title of index	Description and use	Status of index	Maintained at— Headquarters	Field office
Car Ring Theft Working Index	Contains cards on individuals involved in car ring theft cases on which the FBI laboratory is doing examination work.	Active	Yes	No
Cartage Album	Consists of photos with descriptive data of individuals who have been convicted of theft from interstate shipment or interstate transportation of stolen property where there is a reason to believe they may repeat the offense. It is used in investigating the above violations.	Active	No	Yes (3)
Channelizing Index	Consists of cards with the names and case file numbers of people who are frequently mentioned in informant reports. The index is used to facilitate the distributing or channeling of informant reports to appropriate files.	Active	No	Yes (9)
Check Circular File	Consists of fliers filed numerically in a control file on fugitives who are notorious fraudulent check passers and who are engaged in a continuing operation of passing checks. The fliers which include the subject's name, photo, a summary of the subject's method of operation and other identifying data is used to alert other FBI field offices and business establishments which may be the victims of bad checks.	Active	Yes	Yes (43)
Classified Alphabetical Retrieval and Reference Index.	Contains cards on foreign nationals. U.S. citizens and hostile intelligence service targets identified by highly sensitive sources. It is used only for reference and retrieval purposes.	Active	Yes	No

Records Maintained in FBI Field Divisions—FBI field divisions maintain for limited periods of time investigative, administrative and correspondence records, including files, index cards and related material, some of which are duplicated copies of reports and similar documents forwarded to FBI Headquarters. Most investigative activities conducted by FBI field divisions are reported to FBI Headquarters at one or more stages of the investigation. There are, however, investigative activities wherein no reporting was made to FBI Headquarters, e.g., pending cases not as yet reported and cases which were closed in the field division for any of a number of reasons without reporting to FBI Headquarters.

Duplicate records and records which extract information reported in the main files are also kept in the various divisions of the FBI to assist them in their day-to-day operation. These records are lists of individuals which contain certain biographic data, including physical description and photograph. They may also contain information concerning activities of the individual as reported to FBIHQ by the various field offices. The establishment of these lists is necessitated by the needs of the Divisions to have immediate access to pertinent information duplicative of data found in the Central Records without the delay caused by a time-consuming manual search of central indices. The manner of segregating these individuals varies depending on the particular needs of the FBI Division. The information pertaining to individuals who are a part of the list is derivative of information contained in the Central Records System. These duplicative records fall into the following categories:

(1) Listings of individuals used to assist in the location and apprehension of individuals for whom legal process is outstanding (fugitives);

(2) Listings of individuals used in the identification of particular offenders in cases where the FBI has jurisdiction. These listings include various photograph albums and background data concerning persons who have been formerly charged with a particular crime and who may be suspect in similar criminal activities; and photographs of individuals who are unknown but suspected of involvement in a particular criminal activity, for example, bank surveillance photographs;

(3) Listings of individuals as part of an overall criminal intelligence effort by the FBI. This would include photograph albums, lists of individuals known to be involved in criminal activity, including theft from interstate shipment, interstate transportation of stolen property, and individuals in the upper echelon of organized crime;

(4) Listings of individuals in connection with the FBI's mandate to carry out Presidential directives on January 8, 1943, July 24, 1950, December 15, 1953, and February 18, 1976, which designated the FBI to carry out investigative work in matters relating to espionage, sabotage, and foreign counterintelligence. These listings may include photograph albums and other listings containing biographic data regarding individuals. This would include lists of identified and suspected foreign intelligence agents and informants;

(5) Special indices duplicative of the central indices used to access the Central Records System have been created from time to time in conjunction with the administration and investigation of major cases. This duplication and segregation facilities access to documents prepared in connection with major cases.

In recent years, as the emphasis on the investigation of white collar crime, organized crime, and hostile foreign intelligence operations has increased, the FBI has been confronted with increasingly complicated cases, which require more intricate information processing capabilities. Since these complicated investigations frequently involve massive volumes of evidence and other investigative information, the FBI uses its computers, when necessary, to collate, analyze, and retrieve investigative information in the most accurate and expeditious manner possible. It should be noted that all investigative information, which is placed in computerized form, is actually extracted from the main files and that the duplicative computerized information is only maintained as necessary to support the FBI's investigative activities. Information from these internal computerized subsystems of the "Central Records System" is not accessed by any other agency. All disclosures of computerized information are made in printed form in accordance with the routine uses which are set forth below.

Records also are maintained on a temporary basis relevant to the FBI's domestic police cooperation program, where assistance in obtaining information is provided to state and local police agencies.

Also, personnel type information dealing with such matters as attendance and production and accuracy requirements is maintained by some divisions.

(The following chart idenifies various listings or indexes maintained by the FBI which have been or are being used by various divisions of the FBI in their day-to-day operations. The chart identifies the list by name, description, and use, and where maintained, i.e., FBI Headquarters and/or Field Office. The number in parenthesis in the field office column indicates, the number of field offices which maintain these. The chart indicates, under "status of index," those indexes which are in current use (designated by the word "active") and those which are no longer being used, although maintained (designated by the word "inactive"). There are 24 separate indices which are classified in accordance with existing regulations and are not included in this chart. The following indices are no longer being used by the FBI and are being maintained at FBIHQ pending receipt of authority to destory: Black Panther Party Photo Index; Black United Front Index; Security Index; and Wounded Knee Album.

Title of index	Description and use	Status of index	Maintained at— Headquarters	Field office
Computerized Telephone Number File (CTNF) Intelligence.	Consists of a computer listing of telephone numbers (and subscriber's names and addresses) *utilized by subjects and/or certain individuals which come to the FBI's attention during major investigations of organized crime and gambling matters and the intelligence activities of hostile foreign powers. During subsequent investigations, telephone numbers, obtained through subpoenas, are matched with the telephone numbers on file to determine connections or associations with known foreign agents or organized crime or gambling figures. The subscriber's names and addresses of the telephone numbers in the file are retrievable by name.*	Active	Yes	No

Title of index	Description and use	Status of index	Maintained at— Headquarters	Field office
Con Man Index	*Consists of index cards with names of individuals, along with company affiliation, who travel nationally and internationally while participating in large-dollar-value financial swindles.*	*Active*	*Yes*	*No*
Confidence Game (Flim Flam) Album	Consists of photos with descriptive information on individuals who have been arrested for confidence games and related activities. It is used as an investigative aid.	Active	No	Yes (4)
Copyright Matters Index	Consists of cards of individuals who are film collectors and film titles. It is used as a reference in the investigation of copyright matters.	Active	No	Yes (1)
Criminal Intelligence Index	Consists of cards with name and file number of individuals who have become the subject of an antiracketeering investigation. The index is used as a quick way to ascertain file numbers and the correct spelling of names. This index is also maintained in one resident agency.	Active	No	Yes (2)
Criminal Informant Index	Consists of cards containing identity and brief background information on all active and inactive informants furnishing information in the criminal area.	Active	Yes	No
DEA Class I Narcotics Violators Listing	Consists of a computer listing of narcotic violators—persons known to manufacture, supply, or distribute large quantities of illicit drugs—with background data. It is used by the FBI in their role of assisting DEA in disseminating intelligence data concerning illicit drug trafficking. This index is also maintained in two resident agencies.	Active	Yes	Yes (59)
Deserter Index	Contains cards with the names of individuals who are known military deserters. It is used as an investigative aid.	Active	No	Yes (4)
Evidence Control Index	Consists of cards maintained by the FBI laboratory containing the names of suspects victims, etc., in matters which are currently under examination or have undergone examination within the last 3 years. The index is used to facilitate the efficient management of evidence examinations.	Active	Yes	No
Extremist Informant Index	Consists of cards with identity and background data on all inactive extremist informants. It was used as a reference to aid in the supervision of the informant program. This index was discontinued in November 1976.	Inactive	Yes	No
Extremist Photo Album	Consists of photos mounted on pages containing descriptions of known extremist fugitives and informants. All persons in the Key Extremist program were included in this album. Used for ready reference and fugitive identification. This photo album was discontinued in January 1977.	Inactive	Yes	Yes (20)
False Identities Index	Contains cards with the names of deceased individuals whose birth certificates have been obtained by other persons for possible false identification uses and in connection with which the FBI laboratory has been requested to perform examinations.	*Inactive*	Yes	No
False Identities Program List	Consists of a listing of names of deceased individuals whose birth certificates have been obtained after the person's death, and thus whose names are possibly being used for false identification purposes. The listing is maintained as part of the FBI's program to find persons using false identities for illegal purposes.	*Inactive*	No	Yes (31)
False Identity Photo Album	Consists of names and photos of people who have been positively identified as using a false identification. This is used as an investigative aid in the FBI's investigation of false identities.	*Inactive*	No	Yes (2)
FBI Wanted Persons Index	Consists of cards on persons being sought on the basis of Federal warrants covering violations which fall under the jurisdiction of the FBI. It is used as a ready reference to identify those fugitives.	Active	Yes	No
Foreign Counterintelligence (FCI) Asset Index	Consists of cards with identity background data on all active and inactive operational and informational assets in the foreign counterintelligence field. It is used as a reference aid of the FCI Asset program.	Active	Yes	No
Fraud Against the Government Index	Consists of individuals who have been the subject of a "fraud against the Government" investigation. It is used as an investigative aid.	Active	No	Yes (1)
Fugitive Bank Robbers File	Consists of fliers on bank robbery fugitives filed sequentially in a control file. FBI Headquarters distributes to the field offices filers on bank robbers in a fugitive status for 15 or more days to facilitate their location.	Active	Yes	Yes (43)
Gambling Case Listing	Consists of a listing of persons under investigation for gambling on which the FBI laboratory has provided assistance since 1969.	Active	Yes	No
General Security Index	Contains cards on all persons that have been the subject of a security classification investigation by the FBI field office. These cards are used for general reference purposes.	Active	No	Yes (1)
Hoodlum License Plate Index	Consists of cards with the license plates numbers and descriptive data on known hoodlums and cars observed in the vicinity of hoodlum homes. It is used for quick identification of such persons in the course of investigation. The one index which is not fully retrievable is maintained by a resident agency.	Active	No	Yes (3)
Identification Order Fugitive Flyer File	Consists of fliers filed numerically in a control file. When immediate leads have been exhausted in fugitive investigations and a crime of considerable public interest has been committed, the fliers are given wide circulation among law enforcement agencies throughout the United States and are posted in post offices. The fliers contain the fugitive's photograph, fingerprints, and description.	Active	Yes	Yes (49)
Informant Index	Consists of cards with the name, symbol numbers, and brief background information on the following categories of active and inactive informants, top echelon criminal informants, security informants, criminal informants, operational and informational assets, extremist informants (discontinued), plant informant—informants on and about certain military bases (discontinued), and potential criminal informants.	Active	No	Yes (59)
Informants in Other Field Offices, Index of	Consists of cards with names and/or symbol numbers of informants in other FBI field offices that are in a position to furnish information that may be of value to other field offices. Basic background information would also be included on the index card.	Active	No	Yes (15)
Interstate Transportation of Stolen Aircraft Photo Album.	Consists of photos and descriptive data on individuals who are suspects known to have been involved in interstate transportation of stolen aircraft. It is used as an investigative aid.	Active	No	Yes (1)
IRS Wanted List	Consists of one-page fliers from IRS on individuals with background information who are wanted by IRS for tax purposes. It is used in the identification of persons wanted by IRS.	Active	No	Yes (11)
Key Activist Program Photo Album	Consists of photos mounted on pages containing descriptive data on selected individuals advocating civil disobedience and other unlawful and disruptive acts. It was used to intensify the investigative effort on those persons. This index was discontinued in February 1975.	Inactive	Yes	Yes (47)
Key Extremist Program Listing	Contains a listing of selected individuals who were under investigation for extremist activities and on whom investigation was to be intensified. Individuals included those who traveled extensively and called for civil disobedience and unlawful or disruptive acts. It was used to intensify the investigative effort on those persons. This index was discontinued in February 1975.	Inactive	Yes	No
Kidnapping Book	Consists of data, filed chronologically, on kidnappings that have occurred since the early fifties. The victims' names and the suspects, if known, would be listed with a brief description of the circumstances surrounding the kidnapping. The file is used as a reference aid in matching up prior methods of operation in unsolved kidnapping cases.	Active	Yes	No
Known Check Passers Album	Consists of photos with descriptive data of persons known to pass stolen, forged, or counterfeit checks. It is used as an investigative aid.	Active	No	Yes (4)

Title of index	Description and use	Status of index	Maintained at— Headquarters	Field office
Known Gambler Index	Consists of cards with names, descriptive data, and sometimes photos of individuals who are known bookmakers and gamblers. The index is used in organized crime and gambling investigations. Subsequent to GAO's review, and at the recommendation of the inspection team at one of the two field offices where the index was not fully retrievable, the index was destroyed and thus is not included in the total.	Active	No	Yes (5)
La Cosa Nostra (LCN) Membership Index	Contains cards on individuals having been identified as members of the LCN index. The cards contain personal data and pictures. The index is used solely by FBI agents for assistance in investigating organized crime matters.	Active	Yes	Yes (55)
Leased Line Letter Request Index	Contains cards on individuals and organizations who are or have been the subject of a national security electronic surveillance where a leased line letter was necessary. It is used as an administrative and statistical aid.	Active	Yes	No
Mail Cover Index	Consists of cards containing a record of all mail covers conducted on individuals and groups since about January 1973. It was used for reference in preparing mail cover requests. This index was discontinued in 1975.	Inactive	Yes	No
Military Deserter Index	Consists of cards containing the names of all military deserters where the various military branches have requested FBI assistance in locating. It is used as an administrative aid.	Active	Yes	No
National Bank Robbery Album	Consists of fliers on bank robbery suspects filed sequentially in a control file. When an identifiable bank camera photograph is available and the case has been under investigation for 30 days without identifying the subject, FBIHQ sends a flier to the field offices to help identify the subject.	Active	Yes	Yes (42)
National Fraudulent Check File	Contains photographs of the signatures on stolen and counterfeit checks. It is filed alphabetically but there is no way of knowing if the names are real or fictitious. The index is used to help solve stolen check cases by matching checks obtained in such cases against the index to identify a possible suspect.	Active	Yes	No
National Security Electronic Surveillance Card File (Institutions).	Contains cards on individuals and organizations on whom a National Security Electronic Surveillance has been instituted. It is used as an administrative and statistical aid.	Active	Yes	No
National Security Electronic Surveillance Card File (Requests).	Contains cards on individuals and organizations on whom a National Security Electronic Surveillance has been requested. It is used as an administrative and statistical aid.	Active	Yes	No
Night Depository Trap Index	Contains cards with the names of persons who have been involved in the theft of deposits made in bank night depository boxes. Since these thefts have involved various methods, the FBI uses the index to solve such cases by matching up similar methods to identify possible suspects.	Active	Yes	No
Organized Crime Photo Album	Consists of photos and background information on individuals involved in organized crime activities. The index is used as a ready reference in identifying organized crime figures within the field offices' jurisdiction.	Active	No	Yes (13)
Photospread Identification Elimination File	Consists of photos of individuals who have been subjects and suspects in FBI investigations. It also includes photos received from other law enforcement agencies. These pictures can be used to show witnesses of certain crimes.	Active	No	Yes (14)
Prostitute Photo Album	Consists of photos with background data on prostitutes who have prior local or Federal arrests for prostitution. It is used to identify prostitutes in connection with investigations under the White Slave Traffic Act.	Active	No	Yes (4)
Real Estate Listings Computer Printout	Consists of a computer printout maintained by name of (a particular city's) real estate listings in Multiple Listing Service for 1974–1975. It was used in connection with an investigation.	Inactive	No	Yes, Springfield, Ill.
Royal Canadian Mounted Police (RCMP) Wanted Circular File.	Consists of a control file of individuals with background information of persons wanted by the RCMP. It is used to notify the RCMP if an individual is located.	Active	No	Yes (17)
Security Informant Index	Consists of cards containing identity and brief background information on all active and inactive informants furnishing information in the criminal area.	Active	Yes	No
Security Subjects Control Index	Consists of cards containing the names and case file numbers of individuals who have been subject to security investigations check. It is used as a reference source.	Active	No	Yes (1)
Security Telephone Number Index	Contains cards with telephone subscriber information subpenaed from the telephone company in any security investigation. It is maintained numberically by the last three digits in the telephone number. It is used for general reference purposes in security investigations.	Active	No	Yes (1)
Selective Service Violators Index	Contains cards on individuals being sought on the basis of Federal warrants for violation of the Selective Service Act.	Active	Yes	No
Skyjack Fugitive Album	Contains photographs with descriptive data of fugitives wanted for skyjacking. It is used as a reference aid in cases where the fugitive may reenter the United States.	Active	Yes	Yes (5)
Sources of Information Index	Consists of cards on individuals and organizations such as banks, motels, local governments that are willing to furnish information to the FBI with sufficient frequency to justify listing for the benefit of all agents. It is maintained to facilitate the use of such sources.	Active	No	Yes (10)
Special Services Index	Contains cards of prominent individuals who are in a position to furnish assistance in connection with FBI investigative responsibilities.	Active	No	Yes (28)
Stolen Checks and Fraud by Wire Index	Consists of cards on individuals involved in check and fraud by wire violations. It is used as an investigative aid.	Active	No	Yes (1)
Stop Notices Index	Consists of cards on names of subjects or property where the field office has placed a stop at another law enforcement agency or private business such as pawn shops in the event information comes to the attention of that agency concerning the subject or property. This is filed numerically by investigative classification. It is used to insure that the agency where the stop is placed is notified when the subject is apprehended or the property is located or recovered.	Active	No	Yes (43)
Surveillance Locator Index	Consists of cards with basic data on individuals and businesses which have come under physical surveillance in the city in which the field office is located. It is used for general reference purposes in antiracketeering investigations.	Inactive	Yes	Yes (2)
Symbionese Liberation Army (SLA) Index	Contains cards with mixed subject entries such as individuals, weapons, vehicles, etc., thought to have a connection with the SLA. It was used to tabulate and retrieve data relating to SLA activities.	Inactive	Yes	Yes (2)
Telephone Number Index—Gamblers	Contains information on persons identified usually as a result of a subpena for the names of subscribers to particular telephone numbers or toll records for a particular phone number of area gamblers and bookmakers. The index cards are filed by the last three digits of the telephone number. The index is used in gambling investigations.	Active	No	Yes (2)
Telephone Subscriber and Toll Record Check Index.	Contains cards with information on person identified as the result of a formal request or subpena to the phone company for the identity of subscribers to particular telephone numbers. The index cards are filed by telephone number and would also include iden<tity of the subscriber, billing parties identity, subscribers address, date of request from the telephone company, and file number.	Active	No	Yes (1)
Thieves, Couriers, and Fences Photo Index	Consists of photos and background information on individuals who are or are suspected of being thieves, couriers, or fences based on their past activity in the area of interstate transportation of stolen property. It is used as an investigative aid.	Active	No	Yes (4)
Toll Record Request Index	Contains cards on individuals and organizations on whom toll records have been obtained in national security related cases and with respect to which FBIHQ had to prepare a request letter. It is used primarily to facilitate the handling of repeat requests on individuals listed.	Active	Yes	No

Title of index	Description and use	Status of index	Maintained at—	
			Headquarters	Field office
Top Burglar Album	Consists of photos and background data of known and suspect top burglars involved in the area of interstate transportation of stolen property. It is used as an investigative aid.	Active	No	Yes (4)
Top Echelon Criminal Informant Program (TECIP) Index.	Consists of cards containing identity and brief background information on individuals who are either furnishing high level information in the organized crime area or are under development to furnish such information. The index is used primarily to evaluate, corroborate, and coordinate informant information and to develop prosecutive data against racket figures under Federal, State, and local statutes.	Active	Yes	No
Top Ten Program File	Consists of fliers, filed numerically in a control file, on fugitives considered by the FBI to be 1 of the 10 most wanted. Including a fugitive on the top 10 usually assures a greater national news coverage as well as nationwide circularization of the flier.	Active	Yes	Yes (44)
Top Thief Program Index	Consists of cards of individuals who are professional burglars, robbers, or fences dealing in items likely to be passed in interstate commerce or who travel interstate to commit the crime. Usually photographs and background information would also be obtained on the index card. The index is used as an investigative aid.	Active	No	Yes (27)
Truck Hijack Photo Album	Contains photos and descriptive data of individuals who are suspected truck hijackers. It is used as an investigative aid and for displaying photos to witnesses and/or victims to identify unknown subjects in hijacking cases.	Active	No	Yes (4)
Truck Thief Suspect Photo Album	Consists of photos and background data on individuals previously arrested or are currently suspects regarding vehicle theft. the index is used as an investigative aid.	Active	No	Yes (1)
Traveling Criminal Photo Album	Consists of photos with identifying data of individuals convicted of various criminal offenses and may be suspects in other offenses. It is used as an investigative aid.	Active	No	Yes (1)
Veterans Administration (VA)/Federal Housing Administrative Matters (FHA) Index.	Consists of cards of individuals who have been subject of an investigation relative to VA and FHA matters. It is used as an investigative aid.	Active	No	Yes (1)
Wanted Fliers File	Consists of fliers, filed numerically in a control file, on badly wanted fugitives whose apprehension may be facilitated by a flier. The flier contains the names, photograph, aliases, previous convictions, and a caution notice.	Active	Yes	Yes (46)
Wheeldex	Contains the nicknames and case file numbers of organized crime members. It is used in organized crime investigations.	Active	No	Yes (1)
White-Collar Crime Index—SBA Loans	Consists of a computer printout of individuals who received an SBA loan in one county because of a flood in 1973. This was used to help determine which loan to investigate for possible fraud.	Inactive	No	Yes, Springfield, Ill.
White House Special Index	Contains cards on all potential White House appointees, staff members, guests, and visitors that have been referred to the FBI by the White House security office for a records check to identify any adverse or derogatory information. This index is used to expedite such checks in view of the tight time frame usually required.	Active	Yes	No
Witness Protection Program Index	Contains cards on individuals who have been furnished a new identity by the U.S. Justice Department because of their testimony in organized crime trials. It is used primarily to notify the U.S. Marshal's Service when information related to the safety of a protected witness comes to the FBI's attention.	Active	Yes	No

Authority for maintenance of the system: Federal Records Act of 1950, Title 44, United States Code, Chapter 31, Section 3101; and Title 41, Code of Federal Regulations Subpart 101-11.202, requires Federal agencies to insure that adequate and proper records are made and preserved to document the organization, functions, policies, decisions, procedures and transactions and to protect the legal and financial rights of the Federal Government. Title 28, United States Code, Section 534, delegates authority to the Attorney General to acquire, collect, classify, and preserve identification, criminal identification, crime and other records.

Routine uses of records maintained in the system, including categories of users and the purposes of such uses: Records, both investigative and administrative, are maintained in this system in order to permit the FBI to function efficiently as an authorized, responsive component of the Department of Justice. Therefore, information in this system is disclosed to officials and employees of the Department of Justice, and/or all components thereof, who have need of the information in the performance of their official duties.

Personal information from this system may be disclosed as a routine use to any Federal agency where the purpose in making the disclosure is compatible with the law enforcement purpose for which it was collected, e.g., to assist the recipient agency in conducting a lawful criminal or intelligence investigation, to assist the recipient agency in making a determination concerning an individual's suitability for employment and/or trustworthiness for access clearance purposes, or to assist the recipient agency in the performance of any authorized function where access to records in this system is declared by the recipient agency to be relevant to that function.

In addition, personal information may be disclosed from this system to members of the Judicial Branch of the Federal Government in response to a specific request, or at the initiation of the FBI, where disclosure appears relevant to the authorized function of the recipient judicial office or court system. An example would be where an individual is being considered for employment by a Federal judge.

Information on this system may be disclosed as a routine use to any state or local government agency directly engaged in the criminal justice process, e.g., police, prosecution, penal, probation and parole, and the judiciary, where access is directly related to a law enforcement function of the recipient agency, e.g., in connection with a lawful criminal or intelligence investigation, or making a determination concerning an individual's suitability for employment as a state or local law enforcement officer. Disclosure to a state or local government agency, (a) not directly engaged in the criminal justice process or, (b) for a licensing or regulatory function, is considered on an individual basis only under exceptional circumstances, as determined by the FBI.

Information in this system may be disclosed as a routine use to an organization or individual in both the public or private sector pursuant to an appropriate legal proceeding, or if deemed necessary to elicit information or cooperation from the recipient for use by the FBI in the performance of an authorized activity. An example would be where the activities of an individual are disclosed to a member of the public in order to elicit his/her assistance in our apprehension or detection efforts.

Information in this system may be disclosed as a routine use to an organization or individual in the public or private sector where there is reason to believe the recipient is or could become the target of a particular criminal activity or conspiracy, to the extent the information is relevant to the protection of life or property.

Information in this system may be disclosed to legitimate agency of a foreign government where the FBI determines that the information is relevant to that agency's responsibilities, and dissemination serves the best interests of the U.S. Government, and where the purpose in making the disclosure is compatible with the purpose for which the information was collected.

Relevant information may be disclosed from this system to the news media and general public where there exists a legitimate public interest, e.g., to assist in the location of Federal fugitives, to provide notification of arrests, and where necessary for protection from imminent threat of life or property.

A record relating to an actual or potential civil or criminal violation of the copyright statute, Title 17, United States Code, may be disseminated to a person injured by such violation to assist him/her in the institution or maintenance of a suit brought under such title.

The FBI has received inquiries from private citizens and Congressional offices on behalf of constituents seeking assistance in locating individuals such as missing children and heirs to estates. Where the need is acute, and where it appears FBI files may be the only lead in locating the individual, consideration will be given to furnishing relevant information to the requester. Information will be provided only in those instances where there are reasonable grounds to conclude from available information the individual being sought would want the information to be furnished, e.g., an heir to a large estate. Information with regard to missing children will not be provided where they have reached their majority.

Release of information to Members of Congress. Information contained in this system, the release of which is required by the Freedom

of Information-Privacy Acts, may be made available to a Member of Congress or staff acting upon the Member's behalf when the Member or staff requests the information in behalf of and at the request of the individual who is the subject of the record.

Release of information to the National Archives and Records Service: A record from a system of records may be disclosed as a routine use to the National Archives and Records Service (NARS) in records management inspections conducted under the authority of 44 U.S.C. 2904 and 2906.

Policies and practices for storing, retrieving, accessing, retaining, and disposing of records in the system:

Storage: The active main files are maintained in hard copy form and some inactive records are maintained on microfilm. Investigative information which is maintained in computerized form may be stored in memory, on disk storage, on computer tape, or on a computer printed listing.

Retrievability: The FBI General Index must be searched to determine what information, if any, the FBI may have in its files. The index cards are on all manner of subject matters, but primarily a name index of individuals. It should be noted the FBI does not index all individuals that furnish information or names developed in an investigation. Only that information that is considered pertinent and relevant and essential for future retrieval, is indexed. In certain major cases most persons contacted are indexed in order to facilitate the proper administrative handling of a large volume of material. The FBI is in the process of automating the General Index and, therefore, the retrieval of certain information from the main files will be accomplished through the use of peripheral computer equipment, that is, Cathode Ray Tubes (CRTs) and printers. Automation will not change the "Central Records System"; it will only facilitate more economic and expeditious access to the main files. The automated General Index will not cause the "Central Records System" to be interfaced with any other system of records, nor will it allow any outside agency to access FBI information. Since the General Index of all of the field offices will not be automated for quite some time, certain complicated investigative matters are presently supported with special computerized indices which allow retrieval of information from the main files. These special indices are either maintained on printed listings or on disk storage and then accessed through the use of CRTs.

Safeguards: Records are maintained in a restricted area and are accessed only by FBI employees. All FBI employees receive a complete background investigation prior to being hired. All employees are cautioned about divulging confidential information or any information contained in FBI files. Failure to abide by this provision violates Department of Justice regulations and may violate certain statutes providing maximum severe penalties of a ten thousand-dollar fine or 10 years' imprisonment or both. Employees that resign or retire are also cautioned about divulging information acquired in the job. Registered mail is used to transmit routine hard copy records between field offices. Highly classified records are hand carried by Special Agents or personnel of the Armed Forces Courier Service. Highly classified or sensitive privacy information, which is electronically transmitted between field offices, is transmitted in encrypted form to prevent interception and interpretation. Information transmitted in teletype form is placed in the main files of both the receiving and transmitting field offices. Field offices involved in certain complicated investigative matters may be provided with on-line access to the duplicative computerized information which is maintained for them on disk storage in the FBI Computer Center in Washington, D.C., and this computerized data is also transmitted in encrypted form.

Retention and disposal: The Bureau, by its investigative mandate, collects and maintains information from a wide variety of sources. The records support the Bureau's investigative and administrative needs and its obligation to act as a clearinghouse under Executive Order 10450 regarding the security of Government employees. An active destruction program includes microfilming of certain files over 10 years old and researching files, to determine whether they contain sufficient historical, research, investigative, or intelligence value to warrant their retention. The Code of Federal Regulations, Title 41, and Title 44 of the U.S. Code set forth Records Management procedures to be followed by government agencies in relation to their records. All agencies are required to retain any material made or received during the course of public business which has been preserved or is appropriate for preservation. Accordingly, disposition of records material must be in accordance with established regulations. Subsequent destruction is accomplished through authority granted by National Archives and Records Service, GSA, utilizing either the General Records Schedules or a specific request for record destruction which is approved by the Archivist. Records are also destroyed or returned to source as a result of Court Order. Subsequent to January 27, 1975, a Congressional moratorium on all destruction, and a later decision rendered on further retention of security and intelligence material, has substantially reduced the tangible effects of the destruction program. Hard copy computer printed listings of investigative information which have been placed in the main files are retained in accordance with the established regulations for all information in the "Central Records System." Computerized information, restricted to internal FBI use to support its need to collate, analyze, and retrieve investigative information from the main files, is disposed of when it is no longer required.

System manager(s) and address: Director; Federal Bureau of Investigation; Washington, D.C. 20535.

Notification procedure: Same as above.

Record access procedures: A request for access to a record from the system shall be made in writing with the envelope and the letter clearly marked "Privacy Access Request". Include in the request your full name, complete address, date of birth, place of birth, notarized signature, and other identifying data you may wish to furnish to assist in making a proper search of our records. Also include the general subject mater of the document or its file number. The requester will also provide a return address for transmitting the information. Access requests can be addressed to the Director, Federal Bureau of Investigation, Washington, D.C. 20535, or individually to one or more of the FBI field divisions or Legal Attaches listed in the appendix to this system notice.

Contesting record procedures: Individuals desiring to contest or amend information maintained in the system should also direct their request to the Director, Federal Bureau of Investigation, Washington, D.C. 20535, stating clearly and concisely what information is being contested, the reasons for contesting it, and the proposed amendment to the information sought.

Record source categories: The FBI, by the very nature and requirment to investigate violations of law within its investigative jurisdiction and its responsibility for the internal security of the United States, collects information from a wide variety of sources. Basically it is the result of investigative efforts and information furnished by other Government agencies, law enforcement agencies, and the general public, informants, witnesses, and public source material.

Systems exempted from certain provisions of the act: The Attorney General has exempted this system from subsections (c)(3)(d), (e) (1), (2) and (3), (e)(4) (G) and (H), (e) (5) and (8), (f), (g), of the Privacy Act pursuant to 5 U.S.C. 552a (j) and (k), Rules have been promulgated in accordance with the requirements of 5 U.S.C. 553 (b), (c) and (e) and are being published in the proposed rules section of today's Federal Register.

Appendix of Field Divisions for the Federal Bureau of Investigation Field Office

502 U.S. Post Office and Court House, Albany, N.Y. 12207.
4303 Federal Office Building, Albuquerque, N. Mex. 87101.
Room 500, 300 North Lee Street, Alexandria, Va. 22314.
Room 238, Federal Building, Anchorage, Alaska 99510.
275 Peachtree Street, N.E., Atlanta, Ga. 30303.
7142 Ambassador Road, Baltimore, Md. 21207.
Room 1400-2121 Building, Birmingham, Ala. 35203.
John F. Kennedy Federal Office Building, Boston, Mass. 02203.
Room 1400-111 West Huron Street, Buffalo, N.Y. 14202.
115 U.S. Court House and Federal Building, Butte, Mont. 59701.
1120 Jefferson Standard Life Building, Charlotte, N.C. 28202.
Room 905, Everett McKinley Dirksen Building, Chicago, Ill. 60604.
400 U.S. Post Office and Court House Building, Cincinnati, Ohio 45202.
3005 Federal Office Building, Cleveland, Ohio 44199.
1529 Hampton Street, Columbia, S.C. 29201.
Room 200, 1810 Commerce Street, Dallas, Tex. 75201.
Room 18218, Federal Office Building, Denver, Colo. 80202.
Patrick V. McNamara Building, 477 Michigan Avenue, Detroit, Mich. 48226.
202 U.S. Court House Building, El Paso, Tex. 79901.
Kalanianaole Federal Building, Room 4307, 300 Ala. Moana Boulevard, Honolulu, Hawaii 96850.
6015 Federal Building and U.S. Court House, Houston, Tex. 77002.
575 North Pennsylvania Street, Indianapolis, Ind. 46202.
800 Unifirst Federal Savings & Loan Building, Jackson, Miss. 39205.
Oaks V, Fourth Floor, 7820 Arlington Expressway, Jacksonville, Fla. 32211
Room 300-U.S. Courthouse, Kansas City, Mo. 64106.
Room 800, 1111 Northshore Drive, Knoxville, Tenn. 37919.
Room 2-011, Federal Office Building, Las Vegas, Nev. 89101.

215 U.S. Post Office Building, Little Rock, Ark. 72201.
11000 Wilshire Boulevard, Los Angeles, Calif. 90024.
Room 502, Federal Building, Louisville, Ky. 40202.
841 Clifford Davis Federal Building, Memphis, Tenn. 38103.
3801 Biscayne Boulevard, Miami, Fla. 33137.
Room 700, Federal Building and U.S. Court House, Milwaukee, Wis. 53202.
392 Federal Building, Minneapolis, Minn. 55401.
520 Federal Building, Mobile, Ala. 36602.
Gateway I, Market Street, Newark, N.J. 07101.
Federal Building, 170 Orange Street, New Haven, Conn. 06510.
701 Loyola Avenue, New Orleans, La. 70113.
26 Federal Plaza, New York, N.Y. 10007.
Room 300, 870 Military Highway, Norfolk Va. 23502.
50 Penn Place, N.W., 50th at Pennsylvania, Oklahoma City, Okla. 73118.
Room 7401, Federal Building, 215 North 17th Street, Omaha, Nebr. 68102.
8th Floor, Federal Office Building, 600 Arch Street, Philadelphia, Pa. 19106.
2721 North Central Avenue, Phoenix, Ariz. 85004.
1300 Federal Office Building, Pittsburgh, Pa. 15222.
Crown Plaza Building, Portland, Oreg. 97201.
200 West Grace Street, Richmond, Va. 23220.
Federal Building, 2800 Cottage Way, Sacramento, Calif. 95825.
2704 Federal Building, St. Louis, Mo. 63103.
3203 Federal Building, Salt Lake City, Utah 84138.
433 Federal Building, Box 1630, San Antonio, Tex. 78296.
Federal Office Building, Room 6S31, 880 Front Street, San Diego, Calif. 92188.
450 Golden Gate Avenue, San Francisco, Calif. 94102.
U.S. Courthouse and Federal Building, Room 526, Hato Rey, P.R. 00918.
5401 Paulson Street, Savannah, Ga. 31405.
915 Second Avenue, Seattle Washington 98174.
535 West Jefferson Street, Springfield, Ill. 62702.
Room 610, Federal Office Building, Tampa, Fla. 33602.
Washington Field Office, Washington, D.C. 20535.
Federal Bureau of Investigation Academy, Quantico, Va. 22135.
Legal Attache (AH c/o the American Embassy for the Cities Indicated):
Bern, Switzerland.
Bonn, Germany (Box 310, APO, New York 09080).
Buenos Aires, Argentina.
Caracas, Venezuela (APO, New York 09893).
Hong Kong, B.C.C. (FPO, San Francisco 96659).
London, England (Box 40, FPO, New York 09510).
Manila, Phillippines (APO, San Francisco 96528).
Mexico City, Mexico.
Ottawa, Canada.
Paris, France (APO, New York 09777).
Rome, Italy (APO, New York 09794).
Tokyo, Japan (APO, San Francisco 96503).

JUSTICE/FBI-009

System name: Identification Division Records System.

System location: Federal Bureau of Investigation: J. Edgar Hoover Bldg.; 10th and Pennsylvania Avenue, N.W.; Washington, D.C. 20535.

Categories of individuals covered by the system: A. Individuals fingerprinted as a result of arrest or incarceration by Federal, State or local law enforcement agencies.

B. Persons fingerprinted as a result of Federal employment applications, military service, alien registration and naturalization purposes and individuals desiring to have their fingerprints placed on record with the FBI for personal identification purposes.

Categories of records in the system: A. Criminal fingerprint cards and related criminal justice information submitted by authorized agencies having criminal justice responsibilities.

B. Civil fingerprint cards submitted by Federal agencies and civil fingerprint cards submitted by persons desiring to have their fingerprints placed on record for personal identification purposes.

C. Identification records sometimes referred to as 'rap sheets' which are compilations of criminal history information pertaining to individuals who have criminal fingerprint cards maintained in the system.

D. An alphabetical name index pertaining to each individual whose fingerprints are maintained in the system. The criminal records and the civil records are maintained in separate files and each file has an alphabetical name index related to the data contained therein.

Authority for maintenance of the system: The system is established, maintained and used under authority granted by 28 U.S.C. 534 and P.L. 92-544 (86 Stat. 1115). The authority is also codified in 28 C.F.R. 0.85 (b), and (j).

Routine uses of records maintained in the system, including categories of users and the purposes of such uses: The FBI operates the Identification Division Records System to perform identification and criminal history record information functions for federal, state, local, and foreign criminal justice agencies, and for noncriminal justice agencies, and other entities where authorized by Federal statute, state statute pursuant to Public Law 92-544 (86 Stat. 1115), Presidential executive order, or regulation of the Attorney General of the United States. In addition, identification assistance is provided in disasters, missing person cases, and for other humaintarian pruposes. With regard to missing persons, the FBI Identification Division receives inquiries from private citizens, insurance companies, law enforcement agencies and members of Congress on behalf of constituents, seeking assistance in locating missing children, relatives and heirs of estates. Where the need is acute and where it appears the FBI Identification Division files may be the only source or means of locating the missing person, consideration is given to furnishing information, limited to identity and whereabouts, to the inquiring invividual/agency. Information is provided only in those instances where there is a reasonable belief, based on the information at hand, that the missing individual would want the information to be furnished. Dissemination is also conducted in accordance with Public Law 94-29, known as the Securities Acts Amendments of 1975.

Release of information to the news media: Information permitted to be released to the news media and the public pursuant to 28 C.F.R. 50.2 may be made available from systems of records maintained by the Department of Justice unless it is determined that release of the specific information in the context of a particular case would constitute an unwarranted invasion of personal privacy.

Release of information to Members of Congress: Information contained in systems of records maintained by the Department of Justice, not otherwise required to be released pursuant to 5 U.S.C. 552, may be made available to a Member of Congress or staff acting upon the Member's behalf when the Member or staff requests the information on behalf of and at the request of the individual who is the subject of the record.

Release of information to the National Archives and Records Service: A record from a system of records may be disclosed as a routine use to the National Archives and Records Service (MARS) in records management inspections conducted under the authority of 44 U.S.C. 2904 and 2906.

Policies and practices for storing, retrieving, accessing, retaining, and disposing of records in the system:

Storage: Information in the system is stored manually in file cabinets either in its natural state or on microfilm. In addition, some of the information is stored electronically in converting the manual system to an automated system.

Retrievability: (1) All information in the system is retrievable by technical fingerprint classification index and positive identification is effected only by comparison of the unique characteristics obtained from fingerprint impressions submitted for search against the fingerprint cards maintained within the system.

(2) An auxiliary means of retrieval is through the alphabetical same indexes which contain names of the individuals, their birth date, other physical descriptors and the individuals' technical fingerprint classifications and FBI numbers, if such have been assigned.

(3) The name of an individual and his FBI number may assist in retrieval of information about that individual from within the system. Since July, 1971, all individuals whose fingerprints have been placed in the criminal file have been assigned unique FBI numbers. Prior to July, 1971, all individuals who had two or more fingerprint cards in the criminal file were assigned FBI numbers.

Safeguards: Information in the system is unclassified. Disclosure of information from within the system is made only to authorized recipients upon authentication and verification of the right to access the system by such persons and agencies. The physical security and maintenance of information within the system is provided by FBI rules, regulations and procedures.

Retention and disposal: (1) The Archivist of the United States has approved the destruction of records maintained in the criminal file when the records indicate individuals have reached 80 years of age and the destruction of records maintained in the civil file when the records indicate individuals have reached 75 years of age.

(2) Fingerprint cards and related arrest data in the system are destroyed seven years following notification of the death of an individual whose record is maintained within the system.

(3) Fingerprint cards submitted by state and local criminal justice agencies are returned upon requests of the submitting agencies. The return of a fingerprint card under this procedure results in the deletion from the system of all arrest information related to that fingerprint card.

(4) Fingerprint cards and related arrest data are removed from the Identification Division Records System upon receipt of Federal court orders for expunctions when accompanied by necessary identifying information. Recognizing lack of jurisdiction of local and state courts over an entity of the Federal Government, the Identification Division Records System, as a matter of comity, returns fingerprint cards and related arrest data to local and state criminal justice agencies upon receipt of orders of expunction directed to such agencies by local and state courts when accompanied by necessary identifying informations.

System manager(s) and address: Director, Federal Bureau of Investigation, 10th and Pennsylvania Avenue N.W., Washington, D.C. 20535.

Notification procedure: Address inquiries to the System Manager. The Attorney General has exempted the Identification Division Records System from compliance with subsection (d) of the Act.

Record access procedures: The Attorney General has exempted the Identification Division Records System from compliance with subsection (d) of the Act. However, pursuant to 28 C.F.R. 16.30-34, and Rules and Regulations promulgated by the Department of Justice on May 20, 1975 at 40 Fed. Reg. 22114 (Section 20.34) for Criminal Justice Information Systems, an individual its permitted access to his identification record maintained in the Identification Divison Records System and procedures are furnished for correcting or challenging alleged deficiencies appearing therein.

Contesting record procedures: Same as the above.

Record source categories: See Categories of Individuals.

Systems exempted from certain provisions of the act: The Attorney General has exempted this system from subsections (c)(3) and (4), (d), (c)(1), (2) and (3), (c)(4)(G), (H), (e)(5) and (8), (f), (g) and (m) of the Privacy Act pursuant to 5 U.S.C. 552a (j). Rules have been promulgated in accordance with the requirements of 5 U.S.C. 553(b), (c) and (e) and have been published in the Federal Register.

JUSTICE/CRM—026

System name: Index of Prisoners Transferred Under Prisoner Transfer Treaties.

System location: U.S. Department of Justice; Criminal Division; 10th and Constitution Ave., N.W., Washington, D.C. 20530.

Categories of individuals covered by the system: Prisoners transferred to or from prisons in the United States under prisoner transfer treaties with other countries.

Categories of records in the system: The system consists of alphabetical indicies bearing individual names of prisoners involved in transfers and the tape recordings and occasional verbatim transcripts of consent verification hearings held pursuant to 18 U.S.C. 4107 and 4108, as well as copies of consent verification forms.

Authority for maintenance of the system: ths system is maintained to implement the provisions of 18 U.S.C. 4107(e) and 4108(e). The records maintained in the system are used in conjunction with litigation relating to transfer of prisoners under prisoner transfer treaties.

Routine uses of records maintained in the system, including categories of users and the purposes of such uses: The file is used by personnel of the Office of International Affairs of the Criminal Division to confirm the status of verification consent proceedings and to provide a readily retrievable record in the event of litigation on the issue of consent to the transfer. In addition, a record may be disseminated to the court, to court personnel, and to parties and their counsel in any litigation brought on the issue of proper consent to a prisoner transfer; to a state, local or foreign government, at its request, when the record relates to one of its past or present prisoners who have been the subject of a consent verification hearing; and, to any foreign government that is a party to an applicable treaty in a scheduled report that is required by the treaty.

Release of information to the news media and the public: Information permitted to be released to the news media and the public pursuant to 28 CFR 50.2 may be made available from systems of records maintained by the Department of Justice unless it is determined that release of the specific information in the context of a particular case would constitute an unwarrented invasion of personal privacy.

Release of information to Members of Congress: Information contained in the system not otherwise required to be relaesed pursuant to 5 U.S.C. 552, may be made available to a Member of Congress or staff acting upon the Member's behalf when the Member or staff requests the information on behalf of and at the request of the individual who is the subject of the record.

Release of information to the National Archives and Records Service: A record of the system of records may be disclosed to the National Archives and Records Service (NARS) for records management inspections conducted under the authority of 44 U.S.C. 2904 and 2906.

Policies and practices for storing, retrieving, accessing, retaining, and disposing of records in the system:

Storage: Verification consent forms and tape recordings are stored in file drawer safes.

Retrievability: A record is retrieved from indes cards by the name of the individual and from the file jackets by location and date of the verification consent hearings which appear on the index cards.

Safeguards: The records are stored in file drawer safes. Access to them is limited to personnel of the Office of International Affairs, Criminal Division, United States Department of Justice. The office in which the records are contained is securely locked at night and on weekends.

Retention and disposal: Currently it is planned to maintain records for 10 years in file safes referred to above and then transfer them to the Federal Records Center for retention.

System manager(s) and address: Assistant Attorney General, Criminal Division; U.S. Department of Justice; 10th and Constitution Avenue, N.W., Washington, D.C. 20530.

Notification procedure: Inquiry concerning this system should be in writing and made to the system manager listed above.

Record access procedures: A request for access to a record contained in this system shall be made in writing to the system manager, with the envelope and letter clearly marked 'Privacy Act Request'. the request shall include the name of the individual involved, his birth date and place, or any other identifying number or information which may be of assistance in locating the record, the name of the case or matter involved, if known. The requester shall also provide a return address for transmitting the information.

Contesting record procedures: Individuals desiring to contest or amend information maintained in the system should direct their request to the system manager lsited above, stating clearly and concisely what information is being contested, the reasons for contesting it, and the proposed amendment to the information.

Record source categories: Court records and prisoner statements.

Systems exempted from certain provisions of the act: None.

JUSTICE/DAG-007

System name: The United States National Central Bureau (USNCB) (Department of Justice) of the International Criminal Police Organization (INTERPOL) Criminal Investigative Records System.

System location: Department of Justice, Room 6649, 9th and Pennsylvania Avenue, NW., Washington, D.C. 20530.

Categories of individuals covered by the system: Individuals who have been convicted or are subjects of a criminal investigation with international aspects; specific missing persons; specific deceased persons in connection with death notices; individuals who may be associated with certain weapons, motor vehicles, artifacts, etc., stolen and/or involved in a crime; victims of criminal violations in the United States or abroad; and USNCB personnel involved in litigation.

Categories of records in the system: Information concerning fugitives, wanted persons, lookouts (temporary and permanent), specific missing persons, deceased persons in connection with death notices. Information about individuals includes name, alias, date of birth, address, physical description, various identification numbers, reason for the record or lookout, and details and circumstances surrounding the actual or suspected violation.

Authority for maintenance of the system: 22 U.S.C. 263a.

Routine uses of records maintained in the system, including categories of users and the purposes of such uses: Information is used by the following categories of users to conduct or to assist in the conduct of criminal investigations by law enforcement agencies in the United States and abroad. Local, State, and Federal agents and employees of the United States National Central Bureau of INTERPOL who have a need for the records in the performance of their duties; law enforcement agencies and criminal justice agencies in the United States and abroad; INTERPOL General Secretariat and INTERPOL National Central Bureaus in member countries; employees and officials of financial and commercial business firms and private individuals where such release is considered reasonably necessary to obtain in-

formation to further investigative efforts or to apprehend criminal offenders; and translators of foreign languages as necessary.

Policies and practices for storing, retrieving, accessing, retaining, and disposing of records in the system:

Storage: Information is stored in file folders and on magnetic disks at the United States National Central Bureau and is accessed only by USNCB-INTERPOL personnel except that certain limited data, i.e., that which concerns fugitives and wanted persons, is stored in the Treasury Enforcement Communications System (TECS), TREASURY/OS 00.102, which is accessed by all law enforcement agencies.

Retrievability: Information is retrieved primarily by name, file number, system identification number, personal identification number, and by weapon or motor vehicle number.

Retention and disposal: Upon inactivity for five years the case file is destroyed except for judicial case files involving personnel in the USNCB. These files are retained for 20 years from the date of the judicial action. Files on deceased persons are destroyed within one year of the person's death. Certain records, such as death notifications and missing person records, are normally destroyed within the year after the matter is received and/or resolved. Records not of continuing interest may be destroyed at any time. Disposal of records is by shredding or burning.

System manager(s) and address: Chief, United States National Central Bureau, INTERPOL, Department of Justice, Room 6649, 9th and Pennsylvania Avenue, N.W., Washington, D.C. 20530.

Notification procedure: Inquiries regarding whether the system contains a record pertaining to an individual may be addressed to the Chief, United States National Central Bureau, INTERPOL, Department of Justice, Room 6649, 9th and Pennsylvania Avenue, N.W., Washington, D.C. 20530. To enable INTERPOL to identify whether the system contains a record relating to an individual, the requester must submit a written request identifying the record system, identifying the category and type of records sought, and providing the individual's full name and at least two items of secondary information (date of birth, social security number, employee identification number, or similar identifying information).

Systems exempted from certain provisions of the act: The Attorney General has proposed exemption of this system from subsections (c)(3) and (4), (d), (e)(1), (2), and (3), (e)(4)(G) and (H), (e)(5) and (8), (f), and (g) of the Privacy Act pursuant to 5 U.S.C. 552a(j) and (k). Rules have been promulgated in accordance with the requirements of 5 U.S.C. 553(b), (c), and (e) and are being published in the Proposed Rules Section of today's Federal Register.

JUSTICE/DEA-015

System name: Training Files

System location: Drug Enforcement Administration; 1405 Eye Street, N.W.; Washington, D.C. 20537. Also, field offices. See Appendix 1 for list of addreses.

Categories of individuals covered by the system: Individuals who have attended training programs sponsored by the Drug Enforcement Administration National Training Institute.

Categories of records in the system: (A) Student names; (B) Dates and locations of schools; (C) Class average and individual student grades; (D) Locations of student's employers; (E) Number of years experience in general law enforcement and drug law enforcement; (F) Classification of student's employers by State, local, county, or Federal; (G) Type of school attended; (H) Class rosters; (I) Biographic data; (J) Evaluation reports; (K) Application and attendance records.

Authority for maintenance of the system: This system is maintained to provide educational and training programs on drug abuse and controlled substances law enforcement pursuant to the Comprehensive Drug Abuse Prevention and Control Act of 1970.

Routine uses of records maintained in the system, including categories of users and the purposes of such uses: This system is maintained to assist in performing the administrative functions of the National Training Institute and is used to prepare Class Directories, Class Rosters, Program Evaluation Reports and Statistical Reports. In addition, information from this system is provided to federal, state and local law enforcement and regulatory agencies employing former students and to students in the programs.

Release of information to the news media: Information permitted to be released to the news media and the public pursuant to 28 C.F.R. 50.2 may be made available from systems of records maintained by the Department of Justice unless it is determined that release of the specific information in the context of a particular case would constitute an unwarranted invasion of personal privacy.

Release of information to Members of Congress. Information contained in systems of records maintained by the Department of Justice, not otherwise required to be released pursuant to 5 U.S.C. 552, may be made available to a Member of Congress or staff acting upon the Member's behalf when the Member or staff requests the information on behalf of and at the request of the individual who is the subject of the record.

Release of information to the National Archives and Records Service: A record from a system of records may be disclosed as a routine use to the National Archives and Records Service (NARS) in records management inspections conducted under the authority of 44 U.S.C. 2904 and 2906.

Policies and practices for storing, retrieving, accessing, retaining, and disposing of records in the system:

Storage: The manual records in this system are maintained on index cards and in file folders and the automated portion is maintained on magnetic tape.

Retrievability: Data may be retrieved by the student's last name, school location code, or by begining course dates.

Safeguards: This system of records is maintained at DEA Headquarters which is protected by twenty-four hour guard service and electronic surveillance. Access to the building is restricted to DEA employees and those persons transacting business within the building who are escorted by DEA employees. In addition, the records are maintained in locked file cabinets and access is limited to National Training Institute Personnel on a need-to-know basis.

Retention and disposal: Records in this system are currently maintained indefinitely.

System manager(s) and address: Director; Office of Training; Drug Enforcement Administration; 1405 Eye Street, N.W.; Washington, D.C. 20537.

Notification procedure: Inquiries should be addressed to: Freedom of Information Unit, Drug Enforcement Administration, 1405 Eye Street, N.W., Washington, D.C. 20537. Inquiries should contain: Name; Date and Place of Birth; Dates of attendance at the National Training Institute.

Record access procedures: Same as the above.

Contesting record procedures: Same as the above.

Record source categories: A) Students; B) Instructors.

Systems exempted from certain provisions of the act: None

JUSTICE/DEA-020

System name: Essential Chemical Reporting System

System location: Drug Enforcement Administration (DEA), 1405 I Street, N.W., Washington, DC 20537. Also, DEA Field Offices. See Appendix 1 for list of addresses.

Categories of individuals covered by the system: A. Individuals who submit reports concerning the sale, loss, or theft of piperidine or other chemical essential to the manufacture of controlled substances.

B. Individuals who are reported as the purchaser, importer, or individual suffering the loss or theft of piperidine or other chemical essential to the manufacture of controlled substances.

C. Individuals who are reported as the person placing an order for piperidine or other chemical essential to the manufacture of controlled substances.

D. Individuals who are reported as being involved in or having knowledge of the details relative to the loss or theft of piperidine or other chemical essential to the manufacture of controlled substances.

Categories of records in the system: The system contains: (1) Piperidine reports submitted to DEA pursuant to Pub. L. No. 95-633. (2) Information extracted from piperidine reports and maintained on magnetic tape. (3) Reports submitted voluntarily to DEA concerning chemicals essential to the manufacture of controlled substances.

Authority for maintenance of the system: This system of records is maintained pursuant to the reporting requirements contained in Pub. L. 95-633.

Routine uses of records maintained in the system, including categories of users and the purposes of such uses: Information contained in this system is provided to the following categories of users for the purposes stated:

(A) Other Federal law enforcement and regulatory agencies for law enforcement or regulatory purposes.

(B) State and local law enforcement and regulatory agencies for law enforcement and regulatory purposes.

(C) Release of information to the news media: Information permitted to be released to the news media and the public pursuant to 28 CFR 50.2 may be made available from systems of records maintained by the Department of Justice unless it is determined that release of the specific information in the context of a particular case would constitute an unwarranted invasion of personal privacy.

(D) Release of information to Members of Congress: Information contained in systems of records maintained by the Department of Justice, not otherwise required to be released pursuant to 5 U.S.C. 552, may be made available to a Member of Congress or staff acting upon the Member's behalf when the Member or staff requests the information on behalf of or at the request of the individual who is the subject of the record.

(E) Release of information to the National Archives and Records Service: A record from a system of records may be disclosed as a routine use to the National Archives and Records Service (NARS) in management inspections under the authority of 44 U.S.C. 2904 and 2906.

Policies and practices for storing, retrieving, accessing, retaining, and disposing of records in the system:

Storage: Essential chemical report documents will be maintained in manual file folders. Information extracted will be maintained on magnetic tape.

Retrievability: The information maintained on magnetic tape will be retrievable by the name of any individual mentioned in the report.

Safeguards: The proposed system of records will be maintained in DEA Headquarters which is protected by twenty-four hour guard service and electronic surveillance. Access to the building is restricted to DEA employees and those persons transacting business within the building who are escorted by DEA employees. Manual files will be maintained in the DEA central files and access to these documents will be restricted to DEA employees on a need-to-know basis. Access to information maintained on magnetic tape will require a specific computer program to extract information. Access to information through ADP terminals will require a user identification code which will be issued to authorized DEA employees on a strict need-to-know basis.

Retention and disposal: Until DEA gains experience to establish the useful life of the records in this system, the records will be maintained indefinitely.

System manager(s) and address: Assistant Administrator for Enforcement, Drug Enforcement Administration, 1405 I Street, N.W., Washington, D.C. 20537.

Notification procedure: Inquiries should be addressed to Freedom of Information Division, Drug Enforcement Administration, 1405 I Street, N.W., Washington, D.C. 20537.

Record access procedures: Same as above.

Contesting record procedures: Same as above.

Record source categories: Individuals required to submit piperidine reports pursuant to Pub. L. 95-633, and individuals who voluntarily submit reports concerning the sale, distribution or importation of chemicals essential to the manufacture of controlled substances.

Systems exempted from certain provisions of the act: None.

JUSTICE/DEA-021

System name: DEA Air Wing Reporting System.

System location: Drug Enforcement Administration (DEA) Aviation Division, DEA/Justice, P.O. Box 534, Addison, Texas 75001.

Categories of individuals covered by the system: DEA pilots.

Categories of records in the system: The system contains: (1) Records relating to the operation and maintenance of DEA aircraft. (2) Records relating to pilot qualifications (CSC Form 671).

This system is maintained to monitor the utilization and maintenance of DEA aircraft and the qualifications of DEA pilots in furtherance of DEA enforcement operations conducted pursuant to the Comprehensive Drug Abuse Prevention and Control Act of 1970 (Public Law 91-513).

Routine uses of records maintained in the system, including categories of users and the purposes of such uses: (1) Federal Aviation Administration for purposes of aircraft documentation and pilot certification.

(2) Department of Defense for communication purposes.

(3) United States Coast Guard for communication purposes.

(4) Communications relay services under contract with DEA for communications purposes.

(5) Release of information to the news media: Information permitted to be released to the news media and the public pursuant to 28 CFR 50.2 may be made available from systems of records maintained by the Department of Justice unless it is determined that release of the specific information in the context of a particular case would constitute an unwarranted invasion of personal privacy.

(6) Release of information to Members of Congress. Information contained in the systems of records maintained by the Department of Justice, not otherwise requested to be released pursuant to 5 U.S.C. 552, may be made available to a Member of Congress or staff acting upon the Member's behalf when the Member or staff requests the information on behalf of and at the request of the individual who is the subject of the record.

(7) Release of Information to the National Archives and Records Service: A record from a system of records may be disclosed as a routine use to the National Archives and Records Service (NARS) in records management inspections conducted under the authority of 44 U.S.C. 2904 and 2906.

Policies and practices for storing, retrieving, accessing, retaining, and disposing of records in the system:

Storage: The automated portions of the records is maintained on an ADP disk storage device. Documentary records are maintained in manual file folders.

Retrievability: Information relating to individuals in the system is retrieved by pilot name or identifying number assigned by DEA.

Safeguards: Access to the system is restricted to DEA personnel on a need-to-know basis. The records are maintained in a secure room at the Addison Aviation Facility in accordance with DEA security procedures and are protected by an electronic alarm system.

Retention and disposal: The automated records are maintained for five years and then purged from the data base. Manual records are maintained indefinitely.

System manager(s) and address: Chief, Aviation Division, Drug Enforcement Administration, 1405 I Street, N.W., Washington, D.C. 20537.

Notification procedure: Inquiries should be addressed to the Freedom of Information Divisdion, Drug Enforcement Administration, 1405 I Street, N.W., Washington, D.C. 20537.

Record access procedures: Same as above.

Contesting record procedures: Same as above.

Record source categories: Information pertaining to individuals in the system is obtained from reports submitted by DEA pilots.

Systems exempted from certain provisions of the act: None.

JUSTICE/INS-004

System name: Top Priority Program (TPP).

System location: Central Office, Immigration and Naturalization Service, 425 I Street, N.W., Washington, D.C.

Categories of individuals covered by the system: Individuals, groups of individuals, or organizations that are expected to generate continuing public interest over a period of time and whose activities lie within the jurisdiction of the Immigration and Nationality Act, including but not limited to those involved in schemes to defraud the government, natorious crime figures, and perpetrators of horrendous or unusual crimes.

Categories of records in the system: 1. Index records of individuals covered by the system, including name of person, group, or organization, and status, reference, and locator information on the related INS case file, if any, in field offices.

2. Temporary file folders established at headquarters containing personal information about the individuals, such as the date and place of birth, immigration status in the United States, marital status, and names of family members and associates; and progress reports on the priority cases.

Authority for maintenance of the system: Section 103 of the Immigration and Nationality Act, as amended (8 U.S.C. 1103).

Routine uses of records maintained in the system, including categories of users and the purposes of such uses: Information regarding status and progress of top priority cases is disseminated to INS managers, the Attorney General, officials of other Federal law enforcement agencies, Members of Congress, and to the President. No personal information is diseminated outside the Department of Justice.

Release of information to the news media and the public: Information permitted to be released to the news media and the public pursuant to 28 CFR 50.2 may be made available from systems of records maintained by the Department of Justice unless it is determined that release of the specific information in the context of a particular case would constitute an unwarranted invasion of personal privacy.

Release of information to Members of Congress: Information contained in systems of records maintained by the Department of Justice, not otherwise required to be released pursuant to 5 U.S.C. 552, may be made available to a Member of Congress or staff acting upon the Member's behalf when the Member or staff requests the information on behalf of or at the request of the individual who is the subject of the record.

Release of information to the National Archives and Records Service: A record from a system of records may be disclosed as a routine

use to the National Archives and Records Service (NARS) in records management inspections conducted under the authority of 44 U.S.C. 2904 and 2906.

Policies and practices for storing, retrieving, accessing, retaining, and disposing of records in the system:

Storage: Records are maintained as paper documents in manually operated index machines and file drawers.

Retrievability: Records are retrieved by the name of the individual, group of individuals, or organization.

Safeguards: The data is safeguarded and protected in accordance with Department of Justice and INS rules and procedures. INS offices are located in buildings under security guard, and access to premises is by official identification. Access to records is restricted to INS employees. All records are stored in locked containers outside normal office hours.

Retention and disposal: Records are deleted from the system one year after the individual or orgainzation ceases to be active in the Top Priority Program. Records are destroyed by shredding or burning.

System manager(s) and address: Assistant Commissioner, Investigations, Immigration and Naturalization Service, 425 I Street, N.W, Washington, D.C. 20536.

Notification procedure: Inquiries should be addressed to the Assistant Commissioner, Investigations, Immigration and Naturalization Service, 425 I Street, N.W, Washington, D.C. 20536. To enable INS ro identify whether the system contains a record relating to an individual, the requester must provide the individual's full name, date of birth, and place of birth; name of organization, if any; description of subject matter; and, if known, the related file number.

Record access procedures: A person desiring to access or contest a record shall submit his request in writing to the agency official designated under "Notification Procedure" above. If a request to access or contest a record is made by mail, the envelope and letter shall be clearly marked "Privacy Act Request." If a requester wishes access to a record, he must identify the record by furnishing the information listed under "Notification Procedure" above. If the requester wishes to contest a record, he must also clearly state which record(s) is being contested, the reason(s) for contesting, and the proposed amendment(s) to the record(s). In addition, he must provide a return address for transmitting any information.

Contesting record procedures: A person desiring to access or contest a record shall submit his request in writing to the agency official designated under "Notification Procedure" above. If a request to access or contest a record is made by mail, the envelope and letter shall be clearly marked "Privacy Act Request." If a requester wishes access to a record, he must identify the record by furnishing the information listed under "Notification Procedure" above. If the requester wishes to contest a record, he must also clearly state which record(s) is being contested, the reason(s) for contesting, and the proposed amendment(s) to the record(s). In addition, he must provide a return address for transmitting any information.

Record source categories: Data is obtained from official records of the Immigration and Naturalization Service. These records include information obtained from other Government agencies.

Systems exempted from certain provisions of the act: None.

Justice/INS-005

System name: Integrated Case Control System (ICCS).

System location: District offices and suboffices of the Immigration and Naturalization Service (INS) in the United States, as detailed in JUSTICE/INS-999.

Categories of individuals covered by the system: Individuals who are covered by various provisions of the immigration and nationality laws of the United States, including current and former applicants or petitioners for benefits; petitioners for naturalization or citizenship; individuals under detention, supervised department, or deportation processes; individuals who are under investigation; students; and others whose case files have been assigned to the INS Office having jurisdiction over the individual's place of residence.

Categories of records in the system: The system contains automated index and summary records to aid in the management of files and administrative control of the processing of various kinds of active cases within each office where a part of this system is located:

A. "A-file" tracking: index records of individuals covered by the system, including name of person, identification or file number, location of file within the office, immigration status, case status (if any), processing checklist;

B. Application and petition control: name and address of applicant or petitioner and/or beneficiary and authorized representative (if any), date and country of birth, file number, form number of application of petition, date filed or received, control number, status, case assignment, scheduling data;

C. Automated file summary: name, file number, abstracts of documents on file in permanent manual file;

D. Closed file docket: name, file number, Federal Records Center accession number and location, date closed;

E. Deportation and detention docket control: name, file number, charge, amount of bond, hearing date, case assignment, scheduling data;

F. Investigations control: name, file number, reason for investigation, case assignment, scheduling data;

G. Naturalization and citizenship docket control: name, file number, petition number, date of receipt of petition, date and place of filing, number of court where petition was filed, code of authorized representative (if any), scheduling data;

H. Student registration control: name, file number, date of admission, length of approved stay, school attended.

Authority for maintenance of the system: Section 103 of the Immigration and Nationality Act, as amended (8 U.S.C. 1103).

Routine uses of records maintained in the system, including categories of users and the purposes of such uses: Information regarding the status and progress of cases is disseminated to the individuals of their authorized representatives, concerned employees of INS and other components of the Department of Justice, officials of other Federal law enforcement agencies, Members of Congress, and to the President. No personal information from this system of records is disseminated outside the Department of Justice.

Release of information to the news media and the public: Information permitted to be released to the news media and the public pursuant to 28 CFR 50.2 may be made available from systems of records maintained by the Department of Justice unless it is determined that release of the specific information in the context of a particular case would constitute an unwarranted invasion of personal privacy.

Release of information to Members of Congress: Information contained in systems of records maintained by the Department of Justice, not otherwise required to be released pursuant to 5 U.S.C. 552, may be made available to a Member of Congress or staff acting upon the Member's behalf when the Member or staff requests the information on behalf of and at the request of the individual who is the subject of the record.

Release of information to the National Archives and Records Service: A record from a system of records may be disclosed as a routine use to the National Archives and Records Service (NARS) in records management inspections conducted under the authority of 44 U.S.C. 2904 and 2906.

Policies and practices for storing, retrieving, accessing, retaining, and disposing of records in the system:

Storage: Records are maintained on magnetic disks, tapes, and other computer-readable media.

Retrievability: Records are retrieved by the name or file number of the individual, control number of the case, date of filing or last action, pending status, case assignment, or scheduling data.

Safeguards: The data is safeguarded and protected in accordance with Department of Justice and INS rules and procedures. INS offices are located in buildings under security guard, and access to premises is by official indentification. Access to terminals is restricted to INS employees, and access to records is further protected by the use of passwords and controlled data base search arguments.

Retention and disposal: Case control records (those identified under "Categories of records in the system" as "B," "C," "E," "F," "G," and "H") are deleted from the automated data base ninety (90) days after final action. File index records (those identified under "Categories of records in the systems" as "A" and "D") are deleted six months after disposal of the manual files.

System manager(s) and address: Associate Commissioner, Operations Support, Central Office; District Director or Officer in Charge in each office where a part of this system is located.

Notification procedure: Inquiries should be addressed to the District Director or Officer in Charge of the INS office where the file is located. If the file location is not known, inquiries may be addressed to the Associate Commissioner, Operations Support, 425 I Street NW, Washington, DC 20536. To enable INS to identify whether the system contains a record relating to an individual, the requester must provide the individual's full name, date of birth, and place of birth; description of subject matter; and, if known, the related file number.

Record access procedure: A person desiring access to a record shall submit his request in writing to the agency official designated under "Notification procedure" above. He must also identify the record by

furnishing the information listed under that procedure. If a request to access a record is made by mail, the envelope and letter shall be clearly marked "Privacy Act Request", and a return address must be provided for transmitting any record to him.

Contesting record procedures: A person desiring to contest a record shall submit his request in writing to the agency official designated under "Notification procedure" above. He must also identify the record by furnishing the information listed under that caption and clearly stating which record(s) is being contested, the reason(s) for contesting, and the proposed amendment(s) to the record(s). If a request to access or contest a record is made by mail, the envelope and letter shall be clearly marked "Privacy Act Request", and a return address must be provided for transmitting any information to him.

Record source categories: Data is obtained from official INS records pertaining to the individuals, together with reference and locator data from the centralized Master Index of INS case files.

Systems exempted from certain provisions of the act: None.

Justice/INS-999

System name: INS Appendix: List of principal offices of the Immigration and Naturalization Service.

Central Office: Immigration and Naturalization Service; 425 "I" Street NW, Washington, DC 20536.

Regional Offices: Easter Regional Office, Federal Building, Burlington, VT 05401.

Northern Regional Office, Fort Snelling, Twin Cities, St. Paul, MN 55111.

Southern Regional Office, First International Building, 1201 Elm Street, Room 2300, Dallas, TX 75270.

Wester Regional Office, Terminal Island, San Pedro, CA 90731.

District Offices in the United States: Anchorage District Office, Federal Building, U.S. Courthouse, Room D—229, 701 "C" Street, Anchorage, AK 99513.

Atlanta District Office, Richard B. Russell Federal Building, Room 1408, 75 Spring Street SW, Atlanta, GA 20303.

Baltimore District Office, E. A. Garmatz Federal Building, 100 South Hanover Street, Baltimore, MD 21201.

Boston District Office, John Fitzgerald Kennedy Federal Building, Government Center, Boston, MA 02203.

Buffalo District Office, 68 Court Street, Buffalo, NY 14202.

Chicago District Office, Dirkson Federal Office Building, 219 South Dearborn Street, Chicago, IL 60604.

Cleveland District Office, Anthony J. Celebrezze Federal Building, Room 1917, 1240 East Ninth Street, Cleveland, OH 44199.

Dallas District Office, Federal Building, Room 6A21, 1100 Commerce Street, Dallas, TX 75242.

Denver District Office, Federal Building, Room 17027, Denver, CO 80202.

Detroit District Office, Federal Building, 333 Mt. Elliott Street, Detroit, MI 48207.

El Paso District Office, U.S. Courthouse, room 343, El Paso, TX 79984.

Harlingen District Office, 719 Grimes Avenue, Harlingen, TX 78550.

Hartford District Office, 900 Asylum Avenue, Hartford, CT 06105.

Helena District Office, Federal Building, Room 512, 301 South Park Helena, Mt 59601.

Honolulu District Office, 595 Ala Moana Boulevard, Honolulu, HI 96809.

Houston District Office, Federal Avenue, Houston, TX 77208.

Kansas City District Office, 324 East Eleventh Street, Suite 1100, Kansas City, Mo 64106.

Los Angeles District Office, 300 North Los Angeles Street, Los Angeles, CA 90012.

Miami District Office, Federal Building, Room 1324, 51 SW First Avenue Miami, FL 33130.

Newark District Office, Federal Building, 970 Broad Street, Newark, NJ 07102.

New Orleans District Office, Postal Services Building, 701 Loyola Avenue, New Orleans, LA 70113.

New York District Office, 26 Federal Plaza, New York, NY 10007.

Omaha District Office, 106 South 15th Street, Omaha, NE 68102.

Philadelphia District Office, U.S. Courthouse, Room 1321, 601 Market Street, Philadelphia, PA 19106.

Phoenix District Office, Federal Building, 230 North First Avenue, Phoenix, AZ 85025.

Portland, Maine, District Office, 76 Pearl Street, Portland, ME 04112.

Portland, Oregon, District Office, Federal Office Building, 511 NW Broadway, Portland, OR 97209.

St. Albans District Office, Federal Building, St. Albans, VT 05478.

St. Paul District Office, New Post Office Building, Room 932 180 East Kellogg Boulevard, St. Paul, MN 44101.

San Antonio District Office, U.S. Federal Building, Suite A301, 727 Eastr Durango, San Antonio,m TX 78206.

San Diego District Office, 880 Front Street, San Diego, CA 92188.

San Francisco District Office, 630 Sansome Street, San Francisco, CA 94111.

San Juan District Office, GPO Box 5068, San Juan, PR 00936.

Seattle District Office, 815 Airport Way, South Seattle, WA 98134.

Washington, DC, District Office, 1025 Vermont Avenue NW, Washington, DC 20538.

District Offices in Foreign Countries:

Hong Kong District Office, U.S. Immigration and Naturalization Service, c/o American Consulate General, Box 30, FPO San Francisco, CA 96659.

Mexico District Office, U.S. Immigration and Naturalization Service, c/o American Embassy Aparato Postal 88 BIS, Mexico City 5, D.F., Mexico.

Rome District Office, Immigration and Naturalization Service, c/o American Embassy, APO New York, NY 09794.

Suboffices (Files Control Offices) in the United States:

Agana Office, 801 Pacific News Building, 238 O'Hare Street, Agana, GU 96910.

Albany Office, U.S. Postoffice and Courthouse, Room 220 Albany, NY 12207.

Charlotte Office, Charles R. Jonas Federal Building, 401 West Trade Street, Charlotte, NC 28231.

Cincinnati Office, U.S. Post Office and Courthouse, 5th and Walnut Streets, Cincinnati, OH 45201.

Hammond Office, Federal Building, Room 104, 507 State Street, Hammond, IN 46320.

Las Vegas Office, Federal Building, U.S. Courthouse, 300 Las Vegas Boulevard, South Las Vegas, NV 89101.

Memphis Office, Federal Building, Room 814, 167 North Main Street, Memphis, TN 38103.

Milwaukee Office, 186 Federal Building, Room 186, 517 East Wisconsin Avenue, Milwaukee, WI 53202.

Norfolk Office, Norfolk Federal Building, Room 439, 200 Granby Mall, Norfolk, VA 23510.

Pittsburgh Office, Federal Building, Room 2130, 1000 Liberty Avenue, Pittsburgh, PA 15222.

Providence Office, Federal Building, U.S. Post Office, Exchange Terrace, Providence, RI 02903.

Reno Office, 350 South Center Street, Suite 150, Reno, NV 89502.

St. Louis Office, U.S. Courthouse and Customhouse, Room 423, 1114 Market Street, St. Louis, Mo 63101.

Salt Lake City Office, New Federal Building, Room 4103, 125 South State Street, Salt Lake City, UT 84138.

Spokane Office, U.S. Courthouse Building, Room 691, Spokane, WA 99201.

Border Patrol Sector Headquarters:

Blaine Sector Headquarters, 1590 H Street, Blaine, WA 98230.

Buffalo Sector Headquarters, 231 Grant Island Boulevard, Tonawanda, NY 14150.

Chula Vista Sector Headquarters, 3752 Beyer Boulevard, San Ysidro, CA 92073.

Del Rio Sector Headquarters, San Antonio Highway, Eagle Pass, TX 78852.

Detroit Sector Headquarters, P.O. Box 32639, Detroit, MI 48232.

El Centro Sector Headquarters, 1111 North Imperial Avenue, El Centro, CA 92243.

El Paso Sector Headquarters, 8901 Montana Avenue, El Paso, TX 79986.

Grand Forks Sector Headquarters, 2320 South Washington Street, Grand Forks, ND 58201.

Havre Sector Headquarters, Beaver Creek Road, Havre, MT 59501.

Houlton Sector Headquarters, Route 1, Houlton, ME 04730.

Laredo Sector Headquarters, Del Mar Boulevard, East of I.H. 35, Laredo, TX 78041.

Livermore Sector Headquarters, Building 312, Camp Parks, Pleasanton, CA 94566.

Marfa Sector Headquarters, Madrid Street, Marfa, TX 79843.

McAllen Sector Headquarters, 2301 South Main Street, McAllen, TX 78501.

Miami Sector Headquarters, 161 NE 183rd Street, Miami, FL 33169.

New Orleans Sector Headquarters, 3819 Patterson Drive, New Orleans, LA 70174.

Ogdensburg Sector Headquarters, 127 North Water Street, Odgensburg, NY 13669.

Spokane Sector Headquarters, 10710 North State Highway No. 6, Spokane, WA 99208.

Swanton Sector Headquarters, Grand Avenue, Swanton, VT 05488.

Tucson Sector Headquarters, 1970 West Ajo Way, Tucson, AZ 85726.

Yuma Sector Headquarters, 350 First Street, Yuma, AZ 85364.

Border Partol Academy: Officer Development and Training Facility, c/o Federal Law Enforcement Training Center (FLETC), Glynco, GA 31520.

Charlotte Amalie, St. Thomas, Virgin Islands, New Federal Building, Room 117, Charlotte Amalie, St. Thomas, VI 00801.

Suboffices (Files Control Offices) in Foreign Countries:

Athens Office, U.S. Immigration and Naturalization Service, c/o American Embassy, APO New York 09253.

Manila Office, U.S. Immigration and Naturalization Service, c/o American Embassy, APO San Francisco, CA 96528.

Naples Office, U.S. Immigration and Naturalization Service, c/o American Consulate General, Box 18, FPO New York 09521.

Palermo Office, U.S. Immigration and Naturalization Service, c/o American Embassy (P), APO New York 09794.

Seoul, Korea, Office, U.S. Immigration and Naturalization Service, c/o American Embassy, APO San Francisco, CA 96301.

Vienna Office, U.S. Immigration and Naturalization Service, c/o American Embassy, 1010 Vienna, Austria.

El Paso Intelligence Center (EPIC), 2211 East Missouri Street, El Paso, TX 79903.

JUSTICE/LDN-006

System name: Citizens' Mail File.

System location: U.S. Department of Justice; 10th and Constitution Avenue, N.W.; Washington, D.C. 20530.

Categories of individuals covered by the system: All private persons whose correspondence is directly or indirectly routed to the Land and Natural Resoures Division for action or response.

Categories of records in the system: Alphabetized file, by last name of correspondent, containing his/her correspondence and any reply thereto; annual docket which identifies all mail received and disposition thereof.

Authority for maintenance of the system: This file is maintained pursuant to requirements for maintenance of records by Federal agencies (see 44 U.S.C. 3101 et seq.).

Routine uses of records maintained in the system, including categories of users and the purposes of such uses: This file is routinely consulted by personnel of the Land and Natural Resources Division to determine past action on specific matters and to expedite action on additional correspondence received from the individual file subject.

Release of information to the news media: Information permitted to be released to the news media and the public pursuant to 28 CFR 50.2 may be made available from systems of records maintained by the Department of Justice unless it is determined that release of the specific information in the context of a particular case would constitute an unwarranted invasion of personal privacy.

Release of information to Members of Congress: Information contained in systems of records maintained by the Department of Justice, not otherwise required to be released pursuant to 5 U.S.C. 552, may be made available to a member of Congress or staff acting upon the Member's behalf when the Member or staff requests the information on behalf of and at the request of the individual who is the subject of the record.

Release of information to the National Archives and Records Service: A record from a system of records may be disclosed as a routine use of the National Archives and Records Service (NARS) in records management inspections conducted under the authority of 44 U.S.C. 2904 and 2906.

Policies and practices for storing, retrieving, accessing, retaining, and disposing of records in the system:

Storage: Information is stored in file folders in form received, or in photostatic copies if additional referral for response has become necessary.

Retrievability: Information is retrieved by alphabetized name of the subject.

Safeguards: Information contained in the system is unclassified. It is safeguarded in accordance with Departmental rules and procedures governing Justice records.

Retention and disposal: Records are retained in the alphabetical file for a year. At the end of that time, they are transferred to the File Unit, Land and Natural Resources Division, where they are segregated and refiled according to Department of Justice file number and date. Records are subject to destruction 15 years after the pertinent subject has ceased to be in an active status.

System manager(s) and address: Division Control Officer; Land and Natural Resources Division; U.S. Department of Justice; P.O. Box 7415; Washington, D.C. 20044.

Notification procedure: Address inquiries to the Assistant Attorney General; Land and Natural Resources Division; U.S. Department of Justice; P.O. Box 7415; Washington, D.C. 20044.

Record access procedures: A request for access to a record from this system shall be made in writing to the system manager with the envelope and the letter clearly marked "Privacy Access Request." The request shall identify the system and sufficiently describe the record sought.

Contesting record procedures: Individuals desiring to contest or amend information maintained in the system should direct their request to the System Manager listed above, stating clearly and concisely what information is being contested, the reasons for contesting it, and the proposed amendment to the information sought.

Record source categories: Sources of information contained in this system are the individual subjects with whom correspondence is conducted, and in appropriate cases, those agencies furnishing information to assist in responding to the subjects.

Systems exempted from certain provisions of the act: None.

JUSTICE/OLC-003

System name: Office of Legal Counsel Central File.

System location: U.S. Department of Justice; Office of Legal Counsel; 10th and Constitution Avenue, N.W.; Washington, D.C. 20530.

Categories of individuals covered by the system: The system will permit retrieval of information concerning persons mentioned in the legal opinions, memoranda, correspondence, testimony and other writings of the Office of Legal Counsel. These will include:

(A) Addresses, authors and employees of the Office of Legal Counsel whose name appears in memoranda, opinions, correspondence, testimony and other writings of the Office;

(B) Individuals who are the subject of opinions, particularly on such subjects as conflict of interest, employee standards of conduct, and immigration;

(C) Attendees at meetings described in a memorandum included in the file;

(D) Litigants and judges identified in connection with reported court decisions and pending cases described in memoranda; and

(E) Other individuals identified in connection with questions presented to the Office of Legal Counsel for resolution or comment.

Categories of records in the system: The system consists of memoranda, correspondence, testimony and other writings of the Office of Legal Counsel from 1945 to the present.

Authority for maintenance of the system: The system is maintained pursuant to the responsibilities of the Office of Legal Counsel set forth in 28 CFR 0.25.

Routine uses of records maintained in the system, including categories of users and the purposes of such uses: Information contined in this system is provided to the following categories of users for the purposes stated:

(A) Access to the computerized files of the Office of Legal Counsel will be confoned to employees of the Office of Legal Counsel and other employees of the Department of Justice with specific permission, but the records will be available initially to the contractor preparing the records for computerization;

(B) With the approval of the addressees, selected recent opinions of the Office of Legal Counsel will be published for general use, but normally personal information about individuals will be deleted;

(C) Unpublished opinions of the Office of Legal Counsel are ordinarily made available upon request only with the approval of the addresse of the opinion.

Policies and practices for storing, retrieving, accessing, retaining, and disposing of records in the system:

Storage: The indices are maintained on 5 x 7 cards in a master subject-matter index on all Office of Legal Counsel memoranda, opinions, correspondence, testimony and other writings. In addition, to facilitate Freedom of Information Act/Privacy Act searches, an alphabetical assortment of cards has been established within the immigration and conflict of interest opinion indicies which contain the names of individuals who are the subjects of these opinions. These are, in effect, cross-indices to a small portion of the Office of Legal Counsel's overall opinions that are otherwise indexed and retrieved according to subject matter. These indices are maintained to assist in the retrieval of opinions and memoranda from chronological files. However, because the system is undergoing gradual conversion to a

computerized system to facilitate legal research, some opinions are also now stored on magnetic disks. Even though the software design creates the capability for name retrieval, the purpose of the design is to facilitate retrieval by legal subject matter and the Office of Legal Counsel will continue to utilize the system in this manner.

Retrievability: the alphabetical card index on conflict of interest and immigration opinions will be retrieved by name. In addition, while that information which has been entered into the computer to date may be retrieved by name, all information, except that on conflict of interest and immigration opinions, will ordinarily continue to be retrieved by legal subject matter since the Office seldom has need to focus on a name in legal research.

Safeguards: Index cards and chronological files are kept in locked offices when unattended. Access is restricted to those personnel with a need to know.

The compilation of Office of Legal Counsel opinions available on magnetic tape is subject to three access limitations designed to insure that only authorized attorneys of the office of Legal Counsel have access. First, the opinions in the computer system can be retrieved only by those persons having a specified identification number, and numbers are assigned only to attorneys of the office of Legal Counsel. Second, there is an access code word in addition to the identification number required for access to the opinions, and the code word is made known only to the Office of Legal Counsel attorneys. Third, with the limited exception noted below, the opinions can be retrieved only on the terminal located in the Office of the Legal Counsel, and the terminal is in a locked room to which only Office of Legal Counsel personnel (and building maintenance personnel) have keys.

During the period in which the opinions are being computerized an exception to these access restrictions has been made so that the contracting assistant in the Justice Management Division who is overseeing the computerization also has access to the opinions. Once computerization is complete, the access will cease.

Retention and disposal: The records will be maintained indefinitely.

System manager(s) and address: Administrative Officer, Office of Legal Counsel; U.S. Department of Justice; 10th and Constitution Avenue, N.W.; Washington, D.C. 20530.

Notification procedure: Inquiries should be addressed to the Assistant Attorney General, Office of Legal Counsel, at the address above.

Record access procedures: Same as above.

Contesting record procedures: Same as above.

Record source categories: General legal research sources and individuals and agencies requesting opinions from the Office of Legal Counsel.

Systems exempted from certain provisions of the act: None.

Part III

Systems of records which the Department either merged with another record system or deleted during 1978 are listed below. The date deleted or merged, the FEDERAL REGISTER Volume number, and the page are cited in parentheses.

JUSTICE/CRM-009, Narcotic and Dangerous Drug Witness Security Program File (September 18, 1979, FR Vol. No. 44, page 54131, merged with JUSTICE/CRM-002, Criminal Division Witness Security File which was last published on September 30, 1977, FR Vol. No. 42, page 53333)

JUSTICE/CRM-010, Organized Crime and Racketeering Information System (September 18, 1979, FR Vol. No. 44, page 54131 deleted)

JUSTICE/CRM-011, Organized Crime and Racketeering Section File Checkout System (September 18, 1979, FR Vol. No. 44, page 54131 deleted)

JUSTICE/CRM-013, Organized Crime Information Management System (September 18, 1979, FR Vol. No. 44, page 54131 deleted)

JUSTICE/CRM-015, Organized Crime and Racketeering Section Intelligence and Special Services Unit Visitor Pass System (September 18, 1979, FR Vol. No. 44, page 54131 deleted)

JUSTICE/CRM-020, Requests to the Attorney General for Approval of Applications to Federal Judges for Electronic Interceptions in Narcotic and Dangerous Drug Cases (September 18, 1979, FR Vol. No. 44, page 54131, merged with JUSTICE/CRM-019, Requests to the Attorney General for Approval of Applications to Federal Judges for Electronic Interceptions which was last published on September 30, 1977, FR Vol. No. 42, page 53346)

JUSTICE/FBI-013, Investigative Support Information System (ISIS) (October 12, 1979, FR Vol. No. 44, page 58980 deleted)

JUSTICE/OMF-004, Employee Clearance Record (December 7, 1978, FR Vol. No. 43, page 57357 deleted)

JUSTICE/OMF-005, Employee Time Distribution Record (December 7, 1978, FR Vol. No. 43, page 57357 deleted)

JUSTICE/OMF-006, Interim Performance Appraisal Record (December 7, 1979, FR Vol. No. 43, page 57357 deleted)

JUSTICE/OMF-016, Inter-Divisional Information System (IDIS) (April 19, 1979, FR Vol. No. 44, page 23386 deleted)

In addition, it is hereby noticed that the Bureau of Prisons proposes to delete the Inmate Safety and Accident Compensation Record System (JUSTICE/BOP-005) which was published in error in the last annual publication on September 28, 1978, Vol. No. 43, page 44736)

Part IV

Systems of records which the Department now proposes to amend are listed below. Following the list, the systems are reprinted in full text. Except where noted otherwise, these systems were last published in volume 43 of the the FEDERAL REGISTER on September 28, 1978. Changes have been italicized for the convenience of the reader.

Interested persons are invited to comment on any change to the routine use of information in the record systems to the Administrative Counsel, Justice Management Division, Room 1214, Department of Justice, Washington, D.C. 20530. All comments must be received by February 11, 1980. If no comments are received on or before February 11, 1980, the amendments will be adopted as set forth. No oral hearings are contemplated.

JUSTICE/AAG-013, Freedom of Information and Privacy Appeals Index.

JUSTICE/CIV-001, The Civil Division Case File System (September 30, 1977, FR Vol. 42)

JUSTICE/CIV-002, The Civil Division Case File System; Customs Litigation

JUSTICE/CRT-007, The Files on Employment Civil Rights Matters Referred by the Equal Employment Opportunity Commission System.

JUSTICE/CRS-001, Operational data Information System

JUSTICE/DEA-008, Investigative Reporting and Filing system (December 1, 1978, FR Vol. No. 43)

JUSTICE/DEA-010, Office of Internal Security Records

JUSTICE/DEA-011, Operations Files

JUSTICE/DEA-012, Registration Status/Investigation Records

JUSTICE/DEA-013, Security Files

JUSTICE/DEA-014, System to Retrieve Information from Drug Evidence (STRIDE/Ballistics)

JUSTICE/JMD-001, Background Investigation Check-off Card

JUSTICE/JMD-002, Controlled Substances Act Nonpublic Records

JUSTICE/JMD-003, Department of Justice Payroll System

JUSTICE/JMD-007, Legal and General Administration Accounting System (LAGA)

JUSTICE/JMD-008, Security Clearance Information System (SCIS)

JUSTICE/JMD-009, Justice Data Management Service Center Utilization Report

JUSTICE/JMD-010, Document Information System (DIS)

JUSTICE/JMD-011, Justice Data Management Service Center Tape Library System

JUSTICE/JMD-012, Executive Biography

JUSTICE/JMD-013, Employee Locator File

JUSTICE/JMD-015, EEO (Equal Employment Opportunity) Volunteer Representative Roster

JUSTICE/JMD-017, Department of Justice Controlled Parking Records

JUSTICE/JMD-018, Occupational Health Physical Fitness Files

JUSTICE/JMD-019, Freedom of Information/Privacy Act Records

JUSTICE/LEAA-005, The Financial Management System

JUSTICE/LEAA-008, The Civil Rights Investigative System

JUSTICE/LEAA-010, The Technical Assistance Resources Files

JUSTICE/LEAA-012, The Public Safety Officers' Benefits System

JUSTICE/OPA-001, Executive Clemency Files

JUSTICE/PRC-001, Docket, Scheduling and Control

JUSTICE/PRC-002, Freedom of Information Act Record System

JUSTICE/PRC-003, Inmate and Supervision Files

JUSTICE/PRC-004, Labor and Pension Case, Legal File and General Correspondence System

JUSTICE/PRC-005, Office Operation and Personnel System

JUSTICE/PRC-006, Statistical, Educational and Developmental System

JUSTICE/PRC-007, Workload Record, Decision Result, and Annual Report System

JUSTICE/BOP-005, Inmate Central Records System

JUSTICE/BOP-999, Appendix of Field Locations for the Bureau of Prisons

Associate Attorney General (AAG)

As a result of a reorganization made effective on October 1, 1978, the Office of Privacy and Information Appeals was transferred from the Office of the Deputy Attorney General to the Office of the Associate Attorney General. Accordingly, JUSTICE/DAG-002 is now redesignated JUSTICE/AAG-013. The fact that the Office of Privacy and Information Appeals is now a part of the Office of the Associate Attorney General is reflected in the system reprinted below.

JUSTICE/*AAG-013*

System name: Freedom of Information and Privacy Appeals Index.

System location: Office of the *Associate* Attorney General; United States Department of Justice; 10th and Constitution Avenue, N.W., Washington, D.C. 20530.

Categories of individuals covered by the system: The system encompasses all individuals who submit administrative appeals under the Freedom of Information or Privacy Acts and initial requests for access to records located in the Office of the Attorney General, Deputy Attorney General or Associate Attorney General.

Categories of records in the system: The system contains copies of administrative requests, appeals and other related correspondence filed under the Freedom of Information and Privacy Acts and copies are filed sequentially by date of receipt based on a numerical identifier assigned to each appeal. Also included are index cards which list the name of the appellant and the numerical identifier assigned.

Authority for maintenance of the system: The system was established and is maintained to enable the Office of the *Associate* Attorney General to comply with the reporting requirements set forth in 5 U.S.C. 552 and 552a.

Routine uses of records maintained in the system, including categories of users and the purposes of such uses: These records are maintained for the purpose of processing administrative requests and appeals under the Freedom of Information and Privacy Acts and to comply with the reporting requirements of those Acts.

Release of information to the news media: Information permitted to be released to the news media and the public pursuant to 28 CFR 50.2 may be made available from systems of records maintained by the Department of Justice unless it is determined that release of the specific information in the context of a particular case would constitute an unwarranted invasion of personal privacy.

Release of information to Members of Congress. Information contained in systems of records maintained by the Department of Justice, not otherwise required to be released pursuant to 5 U.S.C. 552, may be made available to a Member of Congress or staff acting upon the Member's behalf when the Member or staff requests the information on behalf of and at the request of the individual who is the subject of the record.

Release of information to the National Archives and Records Service: A record from a system of records may be disclosed as a routine use to the National Archives and Records Service (NARS) in records management inspections conducted under the authority of 44 U.S.C. 2904 and 2906.

Policies and practices for storing, retrieving, accessing, retaining, and disposing of records in the system:

Storage: These records are stored in file folders in cabinets.

Retrievability: These folders are filed by the number assigned to each.

Safeguards: These records are stored in cabinets in a lockable room.

Retention and disposal: These folders are kept indefinitely.

System manager(s) and address: Director, Office of Privacy and Information Appeals, Office of the *Associate* Attorney General: United States Department of Justice; 10th and Constitution Avenue, N.W.; Washington, D.C. 20530.

Notification procedure: Same as the System Manager.

Record access procedures: Same as the System Manager.

Contesting record procedures: Same as the System Manager.

Record source categories: Those individuals who submit certain requests and all appeals under the Freedom of Information and Privacy Acts.

Systems exempted from certain provisions of the act: None.

Civil Division (CIV)

The Civil Division Case File System (JUSTICE/CIV-001) was last published in Volume 42 of the FEDERAL REGISTER on September 30, 1977. The system is reprinted below to reflect a change in organizational title which resulted from a recent reorganization. In addition, a minor change to the method of storage is shown. The Civil Division Case File System; Customs Litigation (JUSTICE/CIV-002) is reprinted below to show a change in organizational title which also was effected by the reorganization.

JUSTICE/CIV-001

System name: Civil Division Case File System.

System location: U.S. Department of Justice; 10th and Constitution Avenue, N.W.; Washington, D.C. 20530.

Categories of individuals covered by the system: Any and all parties involved in the cases handled by the Civil Division will have identifying data contained in this system.

Categories of records in the system:

1) The main record of the system is the case file which is retained on each case under the jurisdiction of the Civil Division except for those cases for which files are maintained in the Civil Division Case File System: *Field Office, Customs Litigation, Commercial Litigation Branch* and the Office of Alien Property File System, and constitutes the official record of the Department of Justice. All record material relating to a case is retained in the file. Each case is assigned a number comprised of the category designation for the subject matter, the code number for the judicial district where the action originated, and the number of cases of that category which have arisen in that district.

2) Alphabetical and numerical indices are utilized as a means of access to the proper file by the cross-referencing of the names of all parties to a suit with the file number. Forms CV-54 and carbon-interleaf index cards are used in these indices.

3) A Docket Card Index is maintained on each case in order to follow the progress of all Division cases and to obtain statistical data for monthly and fiscal reports. However, all information contained on the cards has been taken from the record material contained in the official file.

Authority for maintenance of the system: General authority to maintain the system is contained in 5 U.S.C. 301 and 44 U.S.C. 3101. The particular system was established in accordance with 28 C.F.R. 0.77(f) and was delegated to the Civil Division pursuant to the memorandum from the Deputy Attorney General, dated July 17, 1974.

Routine uses of records maintained in the system, including categories of users and the purposes of such uses: Any record pertaining to any case or matter in the Civil Division may be disseminated to any other component of the Department of Justice, including the F.B.I. and the United States Attorneys' Offices, for use in connection with the consideration of that case or matter or any other case or matter under consideration by the Civil Division or any other component of the Department of Justice. A record maintained in this system of records may be disseminated as a routine use of such record as follows: (1) in any case in which there is an indication of a violation or potential violation of law, whether civil, criminal or regulatory in nature, the record in question may be disseminated to the appropriate federal, state, local or foreign agency charged with the responsibility for investigating or prosecuting such violation or charged with enforcing or implementing such law; (2) in the course of investigating the potential or actual violation of any law, whether civil, criminal or regulatory in nature, or during the course of a trial or hearing, or the preparation for a trial or hearing for such violation, a record may be disseminated to a federal, state, local or foreign agency, or to an individual or organization, if there is reason to believe that such agency, individual or organization possesses information relating to the investigation, trial or hearing and the dissemination is reasonably necessary to elicit such information or to obtain the cooperation of a witness or an informant; (3) a record relating to a case or matter may be disseminated in an appropriate federal, state, local or foreign court or grand jury proceeding in accordance with established constitutional, substantive, or procedural law or practice; (4) a record relating to a case or matter may be disseminated to a federal, state, or local administrative or regulatory proceeding or hearing in accordance with the procedures governing such proceeding or hearing; (5) a record relating to a case or matter may be disseminated to an actual or potential party or his attorney for the purpose of negotiation or discussion of such matters as settlement of the case or matter, plea bargaining, or formal or informal discovery proceedings; (6) a record relating to a case or matter that has been referred by an agency for investigation, prosecution, or enforcement, or that involves a case or matter within the jurisdiction of an agency, or where the agency or officials thereof are a party to litigation or where the agency or officials may be affected by a case or matter, may be disseminated to such agency to notify the agency of the status of the case or matter or of any decision or determination that has been made, or to make such other inquiries and reports as are necessary during the processing of the case or matter; (7) a record relating to a person held in

custody pending or during arraignment, trial, sentence or extradition proceedings, or after conviction or after extradiction proceedings, may be disseminated to a federal, state, local or foreign prison, probation, parole, or pardon authority, or to any other agency or individual concerned with the maintenance, transportation, or release of such a person; (8) a record relating to a case or matter may be disseminated to a foreign country pursuant to an international treaty or convention entered into and ratified by the United States or to an executive agreement; (9) a record may be disseminated to a federal, state, local, foreign, or international law enforcement agency to assist in the general crime prevention and detection efforts of the recipient agency or to provide investigative leads to such agency; (10) a record may be disseminated to a federal agency, in response to its request, in connection with the hiring or retention of an employee, the issuance of a security clearance, the reporting of an investigation of an employee, the letting of a contract, or the issuance of a license, grant or other benefit by the requesting agency, to the extent that the information relates to the requesting agency's decision on the matter; (11) a record may be disseminated to the public, news media, trade associations, or organized groups, when the purpose of the dissemination is educational or informational, provided that the record does not contain any information identifiable to a specific individual other than is necessary to identify the matter or where the information has previously been filed in a judicial or administrative office, including the clerk of the court; (12) a record may be disseminated to a foreign country, through the United States Department of State or directly to the representative of such country, to the extent necessary to assist such country in civil or criminal proceedings in which the United States or one of its officers or agencies has an interest; (13) a record that contains classified national security information and material may be disseminated to persons who are engaged in historical research projects, or who have previously occupied policy making positions to which they were appointed by the President, in accordance with the provisions of 28 C.F.R. 17.60.

Release of information to the news media: Information permitted to be released to the news media and the public pursuant to 28 C.F.R. 50.2 may be made available from systems of records maintained by the Department of Justice unless it is determined that release of the specific information in the context of a particular case would constitute an unwarranted invasion of personal privacy.

Release of information to Members of Congress. Information contained in systems of records maintained by the Department of Justice, not otherwise required to be released pursuant to 5 U.S.C. 552, may be made available to a Member of Congress or staff acting upon the Member's behalf when the Member or staff requests the information on behalf of and at the request of the individual who is the subject of the record.

Routine uses of records maintained in the system, including categories of users and the purposes of such uses: Release of information to the National Archives and Records Service: A record from a system of records may be disclosed as a routine use to the National Archives and Records Service (NARS) in records management inspections conducted under the authority of 44 U.S.C. 2904 and 2906.

Policies and practices for storing, retrieving, accessing, retaining, and disposing of records in the system:

Storage: 1) The case files utilize standard file jackets and are retained in electronic, rotary power files; *or in standard file cabinets* 2) The alphabetical and numerical index cards, as well as the docket cards, are retained in standard file cabinets.

Retrievability: The files and docket cards must be retrieved by file number. The file number can be ascertained from the alphabetical index if the name of any party to the suit is known.

Safeguards: Information contained in the system is unclassified. However, only attorneys who have their names recorded in the File Unit can be issued a case file. Minimal information about a case is provided from the various indices to telephone callers, since there is a problem with identifying the identity of a caller. If a party desires detailed information, he is referred directly to the attorney of record.

Retention and disposal: When a case file is closed by the *responsible attorney,* it is sent to the Federal Records Center for retention in accordance with the authorized Record Disposal Schedule for the classification of the case. Such schedules are approved by the National Archives. After the designated period has passed, the file is destroyed. However, the index and docket cards are not purged.

System manager(s) and address: Assistant Attorney General; Civil Division; U.S. Department of Justice; 10th and Constitution Avenue, N.W.; Washington, D.C. 20530,

Notification procedure: Address inquiries to: Assistant Attorney General; Civil Division; U.S. Department of Justice; 10th and Constitution Avenue, N.W.; Washington, D.C. 20530.

Record access procedures: A request for information concerning the cases of the Civil Division should be submitted in writing, with the envelope and letter clearly marked 'Privacy Access Request'. The request should include the file number and/or the names of any litigants known to the requestor. The requestor should also provide a return address for transmitting the information. Such access requests should be submitted to the System Manager listed above. Requests may also be made by telephone. In such cases the caller will be referred to the attorney of record. The attorney, in turn, may require an official written request.

Contesting record procedures: Individuals desiring to contest or amend information maintained in the system should direct their request to the System Manager listed above. The request should clearly state, what information is being contested, the reasons for contesting it and the proposed amendment to the information sought.

Record source categories: All litigants involved in the cases of this Division are sources of information. Such information is either contained in the record material in the case files or has been extracted from that record material and put onto docket and index cards.

Systems exempted from certain provisions of the act: None.

JUSTICE/CIV-002

System name: Civil Division Case File System: *Customs Litigation*

System location: 26 Federal Plaza, New York, New York 10007, and U.S. Department of Justice Data Services Center, 10th and Constitution Avenue, N.W., Washington, D.C. 20530.

Categories of individuals covered by the system: Any and all parties and counsel involved in the cases handled by the *Field Office, Customs Litigation, Commercial Litigation Branch* of the Civil Division will have identifying data contained in this system.

Categories of records in the system: 1. The main record of the system is the case file which is retained on each case under the jurisdiction of the *Field Office, Customs Litigation, Commercial Litigation Branch* of the Civil Division and constitutes the official record of the Department of Justice thereon. All record material relating to a case is retained in the file. Each file is assigned the Customs Court number given to the summons filed in that court or, in cases filed prior to October 1, 1970, to reappraisement appeals or to protests filed with the Customs Court.

The number assigned to the file will change to the number assigned by the Court of Customs and Patent Appeals, if that case becomes the subject of an appeal before that court. In addition, the Custom Section retains a log of communications received and communications sent. The correspondence is identified thereon by court (case) number, identification of the kind of communication, and the person receiving it.

2. The case file and communication logs are physically retained at the offices of the *Field Office, Customs Litigation, Commercial Litigation Branch* 26 Federal Plaza, New York, New York 10007. From these records, the *Field Office, Customs Litigation, Commercial Litigation Branch* inputs certain information for conversion into a data processing system which is maintained at the Department of Justice Data Services Center, 10th and Constitution Avenue, N.W., Washington, D.C. 20530. Included in the information contained in the data processing system is the identity of the parties and their counsel, as well as the merchandise involved, the port of entry and the competing statutory provisions.

3. Alphabetical and numerical indices are maintained as a means of access to the proper file number by the cross-referencing of the names of non-government parties to suits with the appropriate file (court) numbers. These indices are made of index cards and maintained in the Chief Clerk's office in the *Field Office, Customs Litigation, Commercial Litigation Branch.*

Authority for maintenance of the system: The *Field Office, Customs Litigation, Commercial Litigation Branch* case files are maintained under the authority of 28 U.S.C. 2601(b) and 2632(e) and established in accordance with 28 C.F.R. 0.45(c) which gives the Civil Division responsibility for 'all litigation incident to the reappraisement and classification of imported goods, including the defense of all suits in the Court of Customs and Patent Appeals', and with 28 C.F.R. 0.48 which designates the *Attorney-in-Charge, Field Office, Customs Litigation* 'to accept service of notices of appeals to the Court of Customs and Patent Appeals and all pleadings and other papers filed in the Customs Court, when the United States is an adverse Party in any customs litigation'.

Routine uses of records maintained in the system, including categories of users and the purposes of such uses: Any record pertaining to any case or matter in the Civil Division may be disseminated to any other component of the Department of Justice, including the Federal Bureau of Investigation and the United States Attorney offices, for use in connection with the consideration of that case or matter or

any other case or matter under consideration by the Civil Division or any other component of the Department of Justice.

Certain information contained in the record may also be disseminated to the U.S. Customs Service, the Department of the Treasury, the International Trade Commission, the Department of State, or any other agency of the Government whose decision is being challenged in a case assigned to the *Field Office, Customs Litigation, Commercial Litigation Branch* for disposition. A record maintained in this system of records may be disseminated as a routine use of such record as follows: (1) in any case in which there is an indication of a violation or potential violation of law, whether civil, criminal or regulatory in nature, the record in question may be disseminated to the appropriate Federal, state, local or foreign agency charged with the responsibility for investigating or prosecuting such violation or charged with enforcing or implementing such law; (2) in the course of investigating the potential or actual violation of any law, whether civil, criminal or regulatory in nature, or during the course of a trial or hearing, or the preparation for a trial or hearing for such violation, a record may be disseminated to a Federal, state, local or foreign agency, or to an individual or organization, if there is reason to believe that such agency, individual or organization possesses information relating to the investigation, trial or hearing and the dissemination is reasonably necessary to elicit such information or to obtain the cooperation of a witness or an informant; (3) a record relating to a case or matter may be disseminated in an appropriate Federal, state, local or foreign court or grand jury proceeding in accordance with established constitutional, substantive, or procedural law or practice; (4) a record relating-to a case or matter may be disseminated to a Federal, state, or local administrative or regulatory proceeding or hearing in accordance with the procedures governing such proceeding or hearing; (5) a record relating to a case or matter may be disseminated to an actual or potential party or his attorney for the purpose of negotiation or discussion of such matters as settlement of the case or matter, plea bargaining, or formal or informal discovery proceedings; (6) a record relating to a case or matter that has been referred by an agency for investigation, prosecution, or enforcement; or that involves a case or matter within the jurisdiction of an agency, or where the agency or officials thereof are a party to litigation or where the agency or officials may be affected by a case or matter, may be disseminated to such agency to notify the agency of the status of the case or matter or of any decision or determination that has been made, or to make such other inquiries and reports as are necessary during the processing of the case or matter; (7) a record relating to a person held in custody pending or during arraignment, trial, sentence or extradition proceedings, or after conviction or after extradition proceedings, may be disseminated to a Federal, state, local or foreign prison, probation, parole, or pardon authority, or to any other agency or individual concerned with the maintenance, transportation, or release of such a person; (8) a record relating to a case or matter may be disseminated to a foreign country pursuant to an international treaty or convention entered into and ratified by the United States or to an executive agreement; (9) a record may be disseminated to a Federal, state, local, foreign, or international law enforcement agency to assist in the general crime prevention and detection efforts of the recipient agency or to provide investigative leads to such agency; (10) a record may be disseminated to a Federal agency, in response to its request, in connection with the hiring or retention of an employee, the issuance of a security clearance, the reporting of an investigation of an employee, the letting of a contract, or the issuance of a license, grant or other benefit by the requesting agency, to the extent that the information relates to the requesting agency's decision on the matter, (11) a record may be disseminated to the public, news media, trade associations, or organized groups, when the purpose of the dissemination is educational or informational, provided that the record does not contain any information identifiable to a specific individual other than is necessary to identify the matter or where the information has previously been filed in a judicial or administrative office, including the clerk of the court; (12) a record may be disseminated to a foreign country, through the United States Department of State or directly to the representative of such country, to the extent necessary to assist such country in civil or criminal proceedings in which the United States or one of its officers or agencies has an interest; (13) a record that contains classified national security information and material may be disseminated to persons who are engaged in historical research projects, or who have previously occupied policy making positions to which they were appointed by the President, in accordance with the provisions 28 CFR 17.60; (14) copies of the summons (protest and reappraisement appeals, where appropriate) and the communication logs are made available to employees of the private contractor who services the data processing system in New York for the purpose of enabling such employees to extract all pertinent information from said documents so that such information may be encoded and converted to punch card form.

Release of information to the news media: Information permitted to be released to the news media and the public pursuant to 28 CFR 50.2 may be made available from systems of records maintained by the Department of Justice unless it is determined that release of the specific information in the context of a particular case would constitute an unwarranted invasion of personal privacy.

Release of information to Members of Congress: Information contained in systems of records maintained by the Department of Justice, not otherwise required to be released pursuant to 5 U.S.C. 552, may be made available to a Member of Congress or staff acting upon the Member's behalf when the Member or staff requests the information on behalf of and at the request of the individual who is the subject of the record.

Release of information to the National Archives and Records Service: A record from a system of records may be disclosed as a routine use to the National Archives and Records Service (NARS) in records management inspections conducted under the authority of 44 U.S.C. 2904 and 2906.

Policies and practices for storing, retrieving, accessing, retaining, and disposing of records in the system:

Storage: (1) The case files utilize standard file jackets or envelopes and are maintained in standard file cabinets; (2) The alphabetical index cards are maintained in standard file cabinets; (3) The communication logs are maintained in looseleaf binders and, when not being currently referred to, are also maintained in standard file cabinets; (4) The information in the data processing system is maintained on tapes stored in the Data Services Center.

Retrievability: (1) The case files must be retrieved by number. The file number may be ascertained from the alphabetical index when the name of any non-government litigant is known. (2) The information contained in the data processing system may be retrieved through the retrieval tool activated by an attorney making a request for a report to the computer technician who codes the request on a form in the format of the retrieval language. The action words of the retrieval reports are: List-lists the case numbers of the cases which satisfy certain criteria such as plaintiff's name, counsel's name, court, number, merchandise, competing statutory provisions, Government counsel. Write—output and the full history for any case specified by case number. Write*—a limited case history for any case specified by case number. Count-tallying the number of cases in the data base contained in the request.

Safeguards: (1) Information contained in the system is unclassified. However, only attorneys in the *Civil Division* who have responsibility for the case may properly obtain a case file. Correspondence and telephone calls about particular cases are referred to the attorney having responsibility for the case. In the attorney's absence, another attorney covering for the absent attorney or the *Attorney-in-Charge, Field Office, Customs Litigation* may respond to the telephone call or correspondence. The index files and the communication logs are utilized only by the personnel of the *Field Office, Customs Litigation, Commercial Litigation Branch* in locating or verifying information contained in the system. (2) Information from the data processing system may be obtained only by attorneys on the basis of requests made in writing on a proper form supplied by the *Field Office, Customs Litigation, Commercial Litigation Branch.* The request is made of the computer technician. Normally these requests are mailed to the technician in charge at the Data Services Center, but occasionally the request may be related telephonically by the computer technician.

Retention and disposal: (1) Closed case files are sent to the Federal Records Center for retention in accordance with the authorized Records Disposal Schedule for the classification of the case. Such schedules are approved by the National Archives. After the designated period is passed, the file is destroyed. The communication logs are sent to the Federal Records Center for retention in accordance with the authorized records disposal schedule after five years. After the designated period those records are also destroyed. The index cards, however, are not purged. (2) Periodically, the inactive cases will be purged from the main tape in the data processing system and transferred to the historical tape where the information will be retained indefinitely. There is a provision in the data processing system to delete and remove an entire case history from the main or historical tape. This may be done on request from the *Attorney-in-Charge, Field Office, Customs Litigation* and such removed cases will not be saved or written on any other tape.

System manager(s) and address: Assistant Attorney General, Civil Division, U.S. Department of Justice, 10th and Constitution Avenue, N.W., Washington, D.C. 20530.

Notification procedure: Address inquiries to Assistant Attorney General; Civil Division, U.S. Department of Justice; 10th and Constitution Avenue, N.W., Washington, D.C. 20530.

Record access procedures: A request for information concerning the cases of the *Field Office, Customs Litigation, Commercial Litigation Branch* of the Civil Division should be submitted in writing, with the envelope and letter clearly marked "Privacy Access Request". The request should include the file number and/or the names of any non-government litigant known to the requestor. The requestor should also provide a return address for transmitting the information. Such access request should be submitted to the System Manager listed above.

Contesting record procedures: Individuals desiring to contest or amend information maintained in the system should direct their request to the Assistant Attorney General, Department of Justice, 10th and Constitution Avenue, N.W., Washington, D.C. 20530. The request should clearly state what information is being contested, the reasons for contesting it, and the proposed amendment to the information sought.

Record source categories: All litigants involved in the cases of this Division are sources of information. Such information is either contained in the record material in the case files or has been extracted from that record material and put on communication logs and/or index cards.

Systems exempted from certain provisions of the act: None.

Civil Rights Division (CRT)

The Files on Employment Civil Rights Matters Referred by the Equal Employment Opportunity Commission System (JUSTICE/CRT-007) is reprinted below. Amendments include the correction of two typographical errors, the addition of 42 U.S.C. 2000e-5(b) to the statutory authorities cited under "Contesting record procedures," and changes which reflect a recent reorganization of the Civil Rights Division.

JUSTICE/CRT-007

System name: Files on Employment Civil Rights Matters Referred by the Equal Employment Opportunity Commission.

System location: U.S. Department of Justice; Civil Rights Division, 10th and Constitution Avenue NW.; Washington, D.C. 20530.

Categories of individuals covered by the system: Persons seeking employment or employed by a state or a political subdivision of a state who have filed charges alleging discrimination in employment with the Equal Employment Opportunity Commission (hereinafter EEOC) which have resulted in a determination by EEOC that there is probable cause to believe that such discrimination has occurred, and attempts by EEOC at conciliation have failed.

Categories of records in the system: The system may contain copies of charges filed with EEOC; copies of EEOC's "determination" letters, letters of transmittal from and to *EEOC*, analyses or evaluations summarizing the charge and other materials in the EEOC file, internal memoranda, attorney notes, and copies of 'right to sue' letters issued by the Civil Rights Division.

Authority for maintenance of the system: The system is maintained pursuant to 44 U.S.C. 3101 and in order to accomplish the Civil Rights Division's responsibility under 28 CFR 0.50 to enforce Federal Statutes affecting civil rights including 42 U.S.C. 2000e-5(f) and 2000e-6.

Routine uses of records maintained in the system, including categories of users and the purposes of such uses: The system is used by employees and officials of the Department to make decisions regarding prosecution of alleged instances of employment discrimination, to issue 'right to sue' letters on behalf of individuals; to make policy and planning determinations; to prepare annual budget requests and justifications; to prepare statistical reports on the work product of the *Federal Enforcement and General Litigation* Sections and to carry out other authorized internal functions of the Department. If the Department has determined to initiate an investigation or litigate a matter referred by EEOC, the records pertaining to that matter are not contained in this system. Such records and their routine uses are described under the notice for the system named: Central Civil Rights Division Index File and Associated Records.

Release of information to the news media: Information permitted to be released to the news media and the public pursuant to 28 CFR 50.2 may be made available from systems of records maintained by the Department of Justice unless it is determined that release of the specific information in the context of a particular case would constitute an unwarranted invasion of personal privacy.

Release of information to Members of Congress. Information contained in systems of records maintained by the Department of Justice, not otherwise required to be released pursuant to 5 U.S.C. 552, may be made available to a Member of Congress or staff acting upon the Member's behalf when the Member or staff requests the information on behalf of and at the request of the individual who is the subject of the record.

Release of information to the National Archives and Records Service: A record from a system of records may be disclosed as a routine use to the National Archives and Records Service (NARS) in records management inspections conducted under the authority of 44 U.S.C. 2904 and 2906.

Policies and practices for storing, retrieving, accessing, retaining, and disposing of records in the system:

Storage: Information in the system is stored manually on index cards and file jackets which are maintained by the *Federal Enforcement* Section, Civil Rights Division. If the charge relates to a public educational agency or institution and was filed before September 1977, such information may be maintained by the *General Litigation* Section, Civil Rights Division.

Retrievability: Information is retrieved primarily by using the appropriate Department of Justice file number, or the name of the charging party, or the state in which the alleged discrimination occurred.

Safeguards: Information in the system is unclassified. It is safeguarded and protected in accordance with departmental rules and procedures.

Retention and disposal: There are no provisions for the disposal of the records in the system although such procedures are under active consideration.

System manager(s) and address: Assistant Attorney General, Civil Rights Division, U.S. Department of Justice, Washington, D.C. 20530.

Notification procedure: Same as the above

Record access procedures: A request for access to a record from this system shall be made in writing with the envelope and letter clearly marked 'Privacy Access Request.' The request should indicate the state where the alleged employment discrimination took place and the employer to which the charge was related. The requester will also provide a return address for transmitting the information. Access requests will be directed to the System Manager listed above.

Contesting record procedures: Individuals desiring to contest or amend information maintained in the system should direct their request to the System Manager listed above, stating clearly and concisely what information is being contested, the reasons for contesting it, and the proposed amendment to the information sought. Disclosure of part of the materials in this system may be prohibited by *42 U.S.C. 2000e-5(b)*, 42 U.S.C. 2000e-8(e) and 44 U.S.C. 3508. Part of this system is exempted from access and contest under 5 U.S.C. 552(k)(2).

Record source categories: Sources of information in this system are charging parties, information compiled and maintained by EEOC, and employees and officials of the Department of Justice responsible for the disposition of the referral request.

Systems exempted from certain provisions of the act: The Attorney General has exempted this system from subsection (d) of the Privacy Act pursuant to 5 U.S.C. 552a(k)(2). Rules have been promulgated in accordance with the requirements of 5 U.S.C. 553(b), (c) and (e) and have been published in the Federal Register.

Community Relations Service (CRS)

In order to more accurately describe the system, the Management Information System (JUSTICE/CRS-001) has been renamed the "Operational Data Information System." In addition, the tape storage system, which is duplicative of the disk storage system, has been discontinued. The amended system is reprinted below.

Pursuant to the Privacy Act of 1974, 5 U.S.C. 552a, the Department of Justice, Community Relations Service (CRS), is republishing the following system of records which was most recently published on September 28, 1978, in the *Federal Register's* annual Privacy Act issuances:

Management Information System (JUSTICE/CRS-001)

In order to more accurately describe the system, the name has been changed to the Operational Data Information System. In addition, the tape storage system, being duplicative of the disk storage system, has been discontinued. Consequently, the name and storage system for the above mentioned record system have been revised and reprinted below to more accurately describe the system. The changes in the existing name and storage system have been italicized for the convenience of the public.

Since the revision of the system's name and storage of the records constitute minor modifications rather than an alternative or expansion

of the scope of this record system, no report to the Office of Management and Budget or the Congress is required.

JUSTICE/CRS-001

System name: *Operational Data* Information System.

System location: Community Relations Service, U.S. Department of Justice, 550 11th Street NW., Washington, D.C. 20530.

Categories of individuals covered by the system: Conciliators and Mediators of the Community Relations Service of the U.S. Department of Justice.

Categories of records in the system: The file contains the names of CRS employees, their case assignments, and the time allocated to each assignment. In addition, information reflecting the current status and handling of the case is included within the system.

Authority for maintenance of the system: The file is established to effect the purposes of 42 U.S.C. 2000g-1, 2000g-3 (1970).

Routine uses of records maintained in the system, including categories of users and the purposes of such uses: The file is used by CRS personnel as a basis for preparing daily, weekly, and monthly activity reports for internal management. It is also used by the Administrative Office to prepare time efficiency analyses on CRS personnel. In addition, the file will be consulted in order to prepare budget requests and reports to the Associate Attorney General, the Attorney General, and to Congress.

Release of Information to the News Media and the Public: Information from the system of records may be made available to the news media and the public, unless such release would violate 42 U.S.C. 2000g-2, or would constitute an unwarranted invasion of personal privacy.

Release of Information to Members of Congress: Information contained in the system, not otherwise required to be released pursuant to 5 U.S.C. 552, may be made available to a Member of Congress or staff acting upon the Member's behalf when the Member or staff requests the information on behalf of, and at the request of, the individual who is the subject of the record unless such release would violate 42 U.S.C. 2000g-2.

Release of Information to the National Archives and Records Service: A record from the system of records may be disclosed to the National Archives and Records Service (NARS) for records management inspections conducted under the authority of 44 U.S.C. 2904 and 2906, unless such disclosure would violate 42 U.S.C. 2000g-2.

Policies and practices for storing, retrieving, accessing, retaining, and disposing of records in the system:

Storage: Automated records are maintained on magnetic disk at the Department of Justice Data Management Service.

Retrievability: Information is retrieved by a variety of key words including, but not limited to, the name of the employee, geographic location, and subject matter of the record.

Safeguards: Information maintained in the system is safeguarded and protected in accordance with Department rules and procedures governing the handling of computerized information. Only individuals specifically authorized by the Director of CRS will have access to the computer through a single terminal located in an office occupied during the day and locked at night. Access to the information in the system will be limited to those CRS employees whose official duties require such information.

Retention and disposal: Records classified by the subject's name are retained until 60 days after the record subject leaves the employment of the Community Relations Service and are then deleted from the system.

System manager(s) and address: Deputy Director, Community Relations Service, U.S. Department of Justice, Todd Building, 550 11th Street NW., Washington, D.C. 20530.

Notification procedure: Address inquiries to Office of Chief Counsel, Community Relations Service, U.S. Department of Justice, 550 11th Street NW., Washington, D.C. 20530.

Record access procedures: In all cases, requests for access to a record shall be in writing, by mail or in person. If request for access is made by mail, the envelope and letter shall be clearly marked "Privacy Act Request." The requester shall include a description of the record requested and, if known, the case file number(s). To identify a record relating to an individual, the requester must provide the individual's full name, date and place of birth, employee identification number, and date of employment and duty assignment station(s) while employed by the Community Relations Service.

Contesting record procedures: Any individual desiring to contest or amend information maintained in the system should direct his or her request to the Deputy Director, Community Relations Service, U.S. Department of Justice, Todd Building, 550 11th Street NW., Washington, D.C. 20530. The request should state clearly what information is being contested, the reason for contesting, and the proposed amendment to the information.

Record source categories: The records are prepared by the conciliator/mediator or, in exceptional cases, by his or her supervisor.

Systems exempted from certain provisions of the act: None.

Drug Enforcement Administration (DEA)

Certain categories of information, namely, the "Notification procedure," the "Record access procedure" and the "Contesting record procedure" were inadvertently omitted from recent publications of some DEA systems of records. Systems identified as DEA-010 through DEA-014 were most recently published, in Volume 43 of the FEDERAL REGISTER on September 28, 1978; DEA-008 was most recently published in Volume 43 of the FEDERAL REGISTER on December 1, 1978. The systems have been reprinted below to correct these omissions.

JUSTICE/DEA-008

System name: Investigative Reporting and Filing System.

System location: Drug Enforcement Administration; 1405 I Street, N.W.; Washington, D.C. 20537. Also, field offices. See Appendix 1 for list of addresses.

Categories of individuals covered by the system:

A. Drug offenders
B. Alleged drug offenders
C. Persons suspected of drug offenses
D. Confidential informants
E. Defendants
F. Witnesses
G. Non-implicated persons with pertinent knowledge of some circumstance or aspect of a case or suspect. These are pertinent references of fact developed by personal interview or third party interview and are recorded as a matter for which a probable need for recall will exist. In the regulatory portion of the system, records are maintained on the following categories of individuals: (a) Individuals registered with DEA under the Comprehensive Drug Abuse Prevention and Control Act of 1970; (b) Responsible officials of business firms registered with DEA; (c) Employees of DEA registrants who handle controlled substances or occupy positions of trust related to the handling of controlled substances; (d) Applicants for DEA registration and their responsible employees.

Categories of records in the system: The investigative Reporting and Filing System includes, among other things, a system of records as defined in the Privacy Act of 1974. Individual records, i.e., items of information on an individual, may be decentralized in separate investigative file folders. Such records, as well as certain other records on persons and subjects not covered by the Act, are made retrievable and are retrieved by reference to the following subsystems.

A. The Narcotics and Dangerous Drugs Information System (NADDIS) consists of two centralized automated indices and machine records on subjects cited in and extracted from investigative reports. The two indices represent a name index and a number index which are used to access one or more specific records for examination. The system serves as both an index to the more voluminous written reports upon which it is based and as an autonomous means for developing investigative leads and aids in selecting source materials for studies of a strategic nature. The system is accessible by telecommunications by appropriately equipped DEA headquarters and field offices. Records which comprise the system are also accessed by special computer runs. These runs are typically generated from selection criteria which cannot be utilized (input) via the telecommunications equipment. Bulk products generated via off-line runs may be formatted on computer tape, in printout or on microfiche depending on the needs of the user.

Direct references to the discrete file folders in which the source reports are filed are provided within each record. Therefore, the NADDIS records point to the more comprehensive manual reports maintained centrally at Headquarters. Records are retrievable by name and by certain identifying numbers in the on-line mode and by virtually any record data element in the off-line mode.

B. The Confidential Source Subsystem within the Investigative Reporting and Filing System consists of demographic and administrative data concerning: (a) persos who under the specific direction of a DEA agent, with or without the expectation of payment or other valuable consideration, furnish information regarding drug trafficking, or perform other lawful services; and (b) persons who furnish information to DEA on an occasional basis.

The information contained in this subsystem is extracted directly from investigative files and confidential informant files contained in the system.

This subsystem contains no names. The subsystem consists of alphanumeric identifiers coupled with demographic and administrative data concerning the confidential source. The subsystem serves primarily as an administrative tool to enable DEA management to perform periodic reviews of confidential sources required by DEA guidelnes and regulations, to enable DEA to maintain more effective management controls over the expenditure of funds to confidential sources and to enable DEA to more systematically assess the performance of particular confidential sources. In addition, the system will generate statistical reports which will assist DEA management in evaluating the overall effectiveness of the utilization of confidential sources of information.

The system is accessed by designated ADP terminals on the strictest need to know basis.

C. Manual name indices covering regional and district investigative activities are maintained by DEA field offices. A residual card index is retained by DEA headquarters that predates the automated central index. The items of information on the manual index records are extracted only from investigative reports and point to the more comprehensive information in pertinent investigative file folders. The records in the field office indices are subsets of the central automated and manual indices. Records are retrievable by name only by this manual technique. Four basic categories of files are maintained within the Investigative Reporting and Filing System, DEA does not maintain a dossier type file in the traditional sense on an individual. Instead, the files are compiled on separate investigations, topics and on a functional basis for oversight and investigative support. (a) Criminal Investigative Case Files; (b) General Investigative Files, Criminal and Regulatory; (c) Regulatory Audit and Investigative Files; (d) Confidential Informant Files.

The basic document contained in these files is a multipurpose report of investigation (DEA-6) in which investigative activities and findings are rigorously documented. The reports pertain to the full range of DEA criminal drug enforcement and regulatory investigative functions that emanate from the Comprehensive Drug Prevention and Control Act of 1970. Within the categories of files listed above, the general file category includes preliminary investigations of a criminal nature, certain topical or functional aggregations and reports of preregistrant inspections/investigations. The case files cover targeted conspiracies, trafficking situations and formal regulatory audits and investigations. Frequently the criminal drug cases are the logical extension of one or more preliminary investigations. The distinction between the case file and general file categories, therefore, is based on internal administrative policy and should not be construed as a differentiation of investigation techniques or practices. These files, except for Confidential Informant Files, contain also adopted reports received from other agencies to include items that comprise, when indexed, individual records within the meaning of the Act. The central files maintained at DEA Headquarters include, in general, copies of investigative reports and most of the supporting documents that are generated or adopted by DEA Headquarters and field offices.

Authority for maintenance of the system: This system is established and maintained to enable DEA to carry out its assigned law enforcement and regulatory functions under the Comprehensive Drug Abuse Prevention and Control Act of 1970 (Pub. L. 91-513), Reorganization Plan No. 2 of 1973, and to fulfill United States obligations under the Single Convention on Narcotic Drugs.

Routine uses of records maintained in the system, including categories of users and the purposes of such uses: This system may be used as a data source or reference facility for numerous summary, management and statistical reports produced by the Drug Enforcement Administration. Only on rare occasions do such reports contain identifiable individual records. Information contained in this system is provided to the following categories of users as a matter of routine use for law enforcement and regulatory purposes: (a) Other federal law enforcement and regulatory agencies; (b) State and local law enforcement and regulatory agencies; (c) Foreign law enforcement agencies with whom DEA maintains liaison; (d) The Department of Defense and Military Departments; (e) The Department of State; (f) U.S. intelligence agencies concerned with drug enforcement; (g) The United Nations; (h) Interpol; (i) To individuals and organizations in the course of investigations to elicit information.

In addition, disclosures are routinely made to the following categories for the purposes stated: (a) To federal agencies for national security clearance purposes and to federal and state regulatory agencies responsible for the licensing or certification of individuals in the fields of pharmacy and medicine; (b) To the Office of Management and Budget upon request in order to justify the allocation of resources; (c) To State and local prosecutors for assistance in preparing cases concerning criminal and regulatory matters; (d) To the news media for public information purposes; and (e) to respondents and their attorneys for purposes of discovery, formal and informal in the course of an adjudicatory, rulemaking, or other hearing held pursuant to the Controlled Substances Act of 1970.

Release of information to the news media: Information permitted to be released to the news media and the public pursuant to 28 CFR 50.2 may be made available from systems of records maintained by the Department of Justice unless it is determined that release of the specific information in the context of a particular case would constitute an unwarranted invasion of personal privacy.

Release of information to Members of Congress. Information contained in systems of records maintained by the Department of Justice, not otherwise required to be released pursuant to 5 U.S.C. 552, may be made available to a Member of Congress or staff acting upon the Member's behalf when the Member or staff requests the information on behalf of and at the request of the individual who is the subject of the record.

Release of information to the National Archives and Records Service: A record from a system of records may be disclosed as a routine use to the National Archives and Records Service (NARS) in records management inspection conducted under the authority of 44 U.S.C. 2904 and 2906.

Policies and practices for storing, retrieving, accessing, retaining, and disposing of records in the system: Administration regulations include detailed instructions for the preparation, adoption, handling, dissemination, indexing of individual records, storage, safeguarding of investigative reports and the accounting of disclosure of individual records.

Storage: 1. The Headquarters central files and the field office subsets of the Investigative Reporting and Filing System are maintained in standard file folders. Standard formats are employed. Manual indices are maintained using standard index record formats.

2. The Narcotics and Dangerous Drugs information subset is stored electronically on the Department of Justice computer center separate from DEA Headquarters.

Retrievability: Access to individual records is gained by reference to either the automated or manual indices. Retrievability is a function of the presence of items in the index and the matching of names in the index with search argument names or identifying numbers in the case of the automated system. Files identified from field office indices are held by the field office and Headquarters. Files identified from the automated index may not be held by the interested office, but the originators of such files are identified. In addition a number of telecommunication terminals have been added to the existing network.

Safeguards: The Investigative Reporting and Filing system is protected by both physical security methods and dissemination and access controls. Fundamental in all cases is that access to investigative information is limited to those persons or agencies with a demonstrated and lawful need to know for the information in order to perform assigned functions.

1. Physical security when investigative files are attended is provided by responsible DEA employees. Physical security when files are unattended is provided by the secure locking of material in approved containers or facilities. The selection of containers or facilities is made in consideration of the sensitivity or National Security Classification, as appropriate, of the files and the extent of security guard and/or surveillance afforded by electronic means.

2. Protection of the automated index is provided by physical, procedural and electronic means. The Master file resides on the Department of Justice computer center and is physically attended or guarded on a full-time basis. Access or observation to active telecommunications terminals is limited to those with a demonstrated need to know for retrieval information. Surreptitious access to an unattended terminal is precluded by a complex sign-on procedure. The procedure is provided only to authorized DEA employees. For certain terminals, access is further restricted by cryptological equipment.

3. An automated log of queries is maintained for each terminal. Improper procedure results in no access. Terminals are signed-off after use. The terminals are otherwise located in locked facilities after normal working hours.

4. The dissemination of investigative information on an individual outside the Department of Justice is made in accordance with the routine uses as described herein or otherwise in accordance with the conditions of disclosure prescribed by the Act. The need to know of the recipient is determined in both cases by DEA as a prerequisite of the release.

Retention and disposal: Records contained within this system except for those in general files are retained for fifty-five (55) years.

Records in general files are retained for twenty (20) years. System manager(s) and address:

Assistant Administrator for Enforcement; Drug Enforcement Administration, 1405 I Street, N.W., Washington, D.C. 20537.

Notification procedure: *Inquiries should be addressed to: Freedom of Information Unit, Drug Enforcement Administration, 1405 I Street, N.W., Washington, D.C. 20537.*

Record access procedures: *Same as above.*

Contesting record procedures: *Same as above.*

Record source categories: (a) DEA personnel; (b) Cooperating individuals; (c) Suspects and defendants; (d) Federal, State and local law enforcement and regulatory agencies; (e) Other federal agencies; (f) Foreign law enforcement agencies; (g) Business records by subpoena; (h) Drug and chemical companies; (i) Concerned citizens.

Systems exempted from certain provisions of the act: The Attorney General has exempted this system from subsections (c)(3) and (4), (d), (e)(1), (2), and (3), (3)(4)(G) and (H), (e)(5) and (8), (f), (g), (h) of the Privacy Act pursuant to 5 U.S.C. 552a (j) and (k). Rules have been promulgated in accordance with the requirements of 5 U.S.C. 553 (b), (c) and (e) and have been published in the FEDERAL REGISTER.

JUSTICE/DEA-010

System name: Office of Internal Security Records.

System location: Drug Enforcement Administration, 1405 I Street NW., Washington, D.C. 20537. Also, field offices. See Appendix 1 for list of addresses.

Categories of individuals covered by the system: A) DEA employees, past and present; B) Applicants for employment with DEA; C) Drug offenders, alleged drug offenders, and persons suspected of drug offenses; D) Offenders, alleged offenders, and persons suspected of committing Federal and state crimes broadly characteristized as corruption or integrity offenses; E) Confidential informants; F) Witnesses; G) Non-implicated persons with pertinent knowledge of circumstances or aspects with pertinent knowledge of circumstances or aspects of a case or suspect. These are pertinent references of fact developed by personal interview or third party interview and are recorded as a matter for which a probable need will exist.

Categories of records in the system: A) Investigative reports with supporting memoranda and work papers relating to investigations of individuals and situations. B) General files which include, among other things, supporting memoranda and work papers and miscellaneous memoranda relating to investigations of and the purported existence of situations and allegations about individuals. C) Audit and inspection reports of inspections of DEA offices, personnel, and situations. D) Zero files containing general correspondence and memoranda relating to the subject matter of the categories of individuals covered by the system.

Authority for maintenance of the system: Reorganization Plan No. 1 of 1968 and 5 U.S.C. 301.

Routine uses of records maintained in the system, including categories of users and the purposes of such uses: Information contained in this system is provided to the following categories of users as a matter of routine uses for law enforcement and regulatory purposes: A. Other Federal law enforcement and regulatory agencies; B. State and local law enforcement and regulatory agencies; C. Foreign law, enforcement agencies with whom DEA maintains liaison; D. The Department of State; E. The Department of Defense and Military Departments; F. U.S. Intelligence agencies concerned with drug enforcement; G. The United Nations; H. Interpol; I. To individuals and organizations in the course of investigations to elicit information.

In addition, disclosures are routinely made to the following categories for the purposes stated: A. To Federal agencies for national security clearance purposes and to Federal and state regulatory agencies responsible for the licensing or certification of individuals in the fields of pharmacy and medicine; B. To the Office of Management and Budget upon request in order to justify the allocation of resources; C. To state and local prosecutors for assistance in preparing cases concerning criminal and regulatory matters; D. To the news media for public information purposes; E. To Federal, State and local governmental agencies who are conducting suitability for employment investigations on current or prospective employees.

Release of information to the news media: Information permitted to be released to the news media and the public pursuant to 28 CFR 50.2 may be made available from systems of records maintained by the Department of Justice unless it is determined that release of the specific information in the context of a particular case would constitute an unwarranted invasion of personal privacy.

Release of information to Members of Congress. Information contained in systems of records maintained by the Department of Justice, not otherwise required to be released pursuant to 5 U.S.C. 552, may be made available to a Member of Congress or staff acting upon the Member's behalf when the Member or staff requests the information on behalf of and at the request of the individual who is the subject of the record.

Release of information to the National Archives and Records Service: A record from a system of records may be disclosed as a routine use to the National Archives and Records Service (NARS) in records management inspections conducted under the authority of 44 U.S.C. 2904 and 2906.

Policies and practices for storing, retrieving, accessing, retaining, and disposing of records in the system:

Storage: These records are maintained in standard investigation folders.

Retrievability: These records are retrieved by use of a card index maintained alphabetically by employee name.

Safeguards: These records are maintained at DEA Headquarters which is protected by twenty-four hour guard service and electronic surveillance. Access to the building is restricted to DEA employees and those persons transacting business within the building who are escorted by DEA employees. Access to the system is restricted to employees of the Office of Internal Security and upper level management officials. The records are stored in safe-type combination lock file cabinets.

Retention and disposal: These records are maintained for 55 years.

System manager(s) and address: Chief Inspector, Drug Enforcement Administration, 1405 I Street NW., Washington, D.C. 20537.

Notification procedure: *Inquiries should be addressed to Freedom of Information Unit, Drug Enforcement Administration, 1405 I Street NW., Washington, D.C. 20537.*

Record access procedure: *Same as above.*

Contesting record procedure: *Same as above.*

Record source categories: A) DEA Investigations; B) Federal, State and local law enforcement agencies; C) Cooperating individuals.

Systems exempted from certain provisions of the act: The Attorney General has exempted this system from subsections (c)(3) and (4), (d), (e)(1), (2) and (3), (e)(4)(G), (H), (e)(5) and (8), (f), (g), (h) of the Privacy Act pursuant to 5 U.S.C. 552a(j) and (k). Rules have been promulgated in accordance with the requirements of 5 U.S.C. 553(b), (c) and (e) and have been published in the Federal Register.

JUSTICE/DEA-011

System name: Operations Files

System location: Drug Enforcement Administration; 1405 Eye Street, N.W.; Washington, D.C. 20537. Also, field offices. See Appendix 1 for list of addresses.

Categories of individuals covered by the system: A) Cooperating Individuals; B) Confidential Informants.

Categories of records in the system: A) Biographic and background information; B) Official Contact Reports; C) Intelligence Reports (DEA-6).

Authority for maintenance of the system: This system of records is maintained to assist in intelligence operations pursuant to the Comprehensive Drug Abuse Prevention and Control Act of 1970 (P.L. 91-513) and Reorganization Plan No. 2 of 1973.

Routine uses of records maintained in the system, including categories of users and the purposes of such uses: This system is used to keep a history of intelligence operations against narcotics traffickers and their support networks. Information contained in this system is provided to the following categories of users for law enforcement purposes on a routine basis: A) Other Federal law enforcement agencies; B) State and local law enforcement agencies; C) Foreign law enforcement agencies with whom DEA maintains liaison; D) United States Intelligence and Military Intelligence agencies involved in drug enforcement; E) The United States Department of State.

Release of information to the news media: Information permitted to be released to the news media and the public pursuant to 28 C.F.R. 50.2 may be made available from systems of records maintained by the Department of Justice unless it is determined that release of the specific information in the context of a particular case would constitute an unwarranted invasion of personal privacy.

Release of information to Members of Congress. Information contained in systems of records maintained by the Department of Justice, not otherwise required to be released pursuant to 5 U.S.C. 552, may be made available to a Member of Congress or staff acting upon the Member's behalf when the Member or staff requests the information on behalf of and at the request of the individual who is the subject of the record.

Routine uses of records maintained in the system, including categories of users and the purposes of such uses: Release of information to

the National Archives and Records Service: A record from a system of records may be disclosed as a routine use to the National Archives and Records Service (NARS) in records management inspections conducted under the authority of 44 U.S.C. 2904 and 2906.

Policies and practices for storing, retrieving, accessing, retaining, and disposing of records in the system:

Storage: These records are maintained in standard case files

Retrievability: These files are retrieved manually by subject matter category and coded identification number.

Safeguards: This system of records is maintained at DEA Headquarters which is protected by twenty-four hour guard service and electronic surveillance. Access to the building is restricted to DEA employees and those persons transacting business within the building who are escorted by DEA employees. In addition, all files are stored in GSA approved security containers approved for Secret material and treated as if they carried a Secret classification whether classified or not. Access to the files is restricted to authorized DEA employees with Top Secret clearances on a limited need-to-know basis.

Retention and disposal: These records are retained indefinitely.

System manager(s) and address: Assistant Administrator for Intelligence; Drug Enforcement Administration; 1405 Eye Street, N.W.; Washington, D. C. 20537.

Notification procedure: *Inquiries should be addressed to Freedom of Information Unit, Drug Enforcement Administration, 1405 I Street NW., Washington, D.C. 20537.*

Record access procedure: *Same as above.*

Contesting record procedure: *Same as above.*

Record source categories: A) DEA Reports; B) Reports of federal, state and local agencies; C) Reports of foreign agencies with whom DEA maintains liaison.

Systems exempted from certain provisions of the act: The Attorney General has exempted this system from subsections (c)(3) and (4), (d), (e)(1), (2) and (3), (e)(4)(G), (H), (e)(5) and (8), (f), (g), (h) of the Privacy Act pursuant to 5 U.S.C. 552a (j) and (k). Rules have been promulgated in accordance with the requirements of 5 U.S.C. 553(b), (c) and (e) and have been published in the Federal Register.

JUSTICE/DEA-012

System name: Registration Status/Investigation Records

System location: Drug Enforcement Administration; 1405 Eye Street, N.W.; Washington, D.C. 20537. Also, field offices. See Appendix 1 for list of addresses.

Categories of individuals covered by the system: Individuals who have a Controlled Substances Act registration number under their personal name who have had some action taken against their license or registration.

Categories of records in the system: A) DEA reports of investigation; B) Information received from state regulatory agencies.

Authority for maintenance of the system: This system of records is maintained to enable the Drug Enforcement Administration to perform its regulatory functions under the Comprehensive Drug Abuse Prevention and Control Act of 1970.

Routine uses of records maintained in the system, including categories of users and the purposes of such uses: Information contained in this system of records is provided for law enforcement and regulatory purposes to the following categories of users on a routine basis: A) Other federal law enforcement and regulatory agencies; B) State and local law enforcement and regulatory agencies; C) To respondents and their attorneys for purposes of discovery, formal and informal, in the course of an adjudicatory, rule-making, or other hearing held pursuant to the Controlled Substances Act of 1970.

Release of information to the news media: Information permitted to be released to the news media and the public pursuant to 28 C.F.R. 50.2 may be made available from systems of records maintained by the Department of Justice unless it is determined that release of the specific information in the context of a particular case would constitute an unwarranted invasion of personal privacy.

Release of information to Members of Congress. Information contained in systems of records maintained by the Department of Justice, not otherwise required to be released pursuant to 5 U.S.C. 552, may be made available to a Member of Congress or staff acting upon the Member's behalf when the Member or staff requests the information on behalf of and at the request of the individual who is the subject of the record.

Release of information to the National Archives and Records Service: A record from a system of records may be disclosed as a routine use to the National Archives and Records Service (NARS) in records management inspections conducted under the authority of 44 U.S.C. 2904 and 2906.

Policies and practices for storing, retrieving, accessing, retaining, and disposing of records in the system:

Storage: These records are maintained in standard case file folders.

Retrievability: This system is indexed by name of registrant.

Safeguards: This system of records is maintained in DEA Headquarters which is protected by 24-hour guard service and electronic surveillance. Access to the building is restricted to DEA employees and those persons transacting business within the building who are escorted by DEA employees. Access to the system is restricted to authorized employees of the Compliance Investigations Division on a need-to-know basis.

Retention and disposal: These records are retained as long as there is a need for the file. These are working files and may be destroyed when no longer required or merged into the Investigative Case File and Reporting System.

System manager(s) and address: Director, Office of Compliance and Regulatory Affairs; Drug Enforcement Administration; 1405 Eye Street, N.W.; Washington, D.C. 20537.

Notification procedure: *Inquiries should be addressed to: Freedom of Information Unit, Drug Enforcement Administration, 1405 I Street, NW., Washington, D.C. 20537*

Record access procedures: *Same as above.*

Contesting record procedures: *Same as above.*

Record source categories: A) DEA Investigators; B) State and local regulatory agencies.

Systems exempted from certain provisions of the act: The Attorney General has exempted this system from subsections (c)(3), (d), (e)(4)(G) and (H), (f) of the Privacy Act pursuant to 5 U.S.C. 552a (k). Rules have been promulgated in accordance with the requirements of 5 U.S.C. 553(b), (c) and (e) and have been published in the Federal Register.

JUSTICE/DEA-013

System name: Security Files

System location: Drug Enforcement Administration; 1405 Eye Street, N.W.; Washington, D.C. 20537. Also, field offices. See Appendix 1 for list of addresses.

Categories of individuals covered by the system: A) DEA personnel; B) Cooperating individuals and informants; C) Drug traffickers and suspected drug traffickers; D) Individuals who might discover DEA investigations or undercover operations by chance.

Categories of records in the system: This system of records contains reports concerning the categories of individuals stated above.

Authority for maintenance of the system: This system of records is maintained to identify and correct security problems in the area of intelligence operations and installations pursuant to the Comprehensive Drug Abuse Prevention and Control Act of 1970 (P.L. 91-513) and Reorganization Plan No. 2 of 1973.

Routine uses of records maintained in the system, including categories of users and the purposes of such uses: This system is utilized to generate reports on security problems in the area of intelligence operations and installations. In addition, information is provided to the following categories of users for law enforcement purposes on a routine basis: A) Other federal law enforcement agencies; B) State and local law enforcement agencies; C) Foreign law enforcement agencies with whom DEA maintains liaison.

Release of information on the news media: Information permitted to be released to the news media and the public pursuant to 28 C.F.R. 50.2 may be made available from systems of records maintained by the Department of Justice unless it is determined that release of the specific information in the context of a particular case would constitute an unwarranted invasion of personal privacy.

Release of information to Members of Congress. Information contained in systems of records maintained by the Department of Justice, not otherwise required to be released pursuant to 5 U.S.C. 552, may be made available to a Member of Congress or staff acting upon the Member's behalf when the Member or staff requests the information on behalf of and at the request of the individual who is the subject of the record.

Release of information to the National Archives and Records Service: A record from a system of records may be disclosed as a routine use to the National Archives and Records Service (NARS) in records management inspections conducted under the authority of 44 U.S.C. 2904 and 2906.

Policies and practices for storing, retrieving, accessing, retaining, and disposing of records in the system:

Storage: These records are maintained in standard case folders.

Retrievability: The information in this system is retrieved by subject matter category or by coded identification number.

Safeguards: This system of records is maintained at DEA Headquarters which is protected by twenty-four hour guard service and electronic surveillance. Access to the building is restricted to DEA employees and those persons transacting business within the building who are escorted by DEA employees. In addition, these records are stored in GSA approved security containers authorized for Secret material. Access to the system is restricted to authorized DEA personnel who have Top Secret Clearances on a limited need-to-know basis.

Retention and disposal: Records in this system are retained as long as the individual remains active and then destroyed or retired to the Federal Records Center.

System manager(s) and address: Assistant Administrator for Intelligence; Drug Enforcement Administration; 1405 Eye Street, N.W.; Washington, D.C. 20537.

Notification procedure: *Inquiries should be addressed to: Freedom of Information Unit, Drug Enforcement Administration, 1405 I Street, N.W., Washington, D.C. 20537*

Record access procedures: *Same as above.*

Contesting record procedures: *Same as above.*

Record source categories: A) DEA Reports; B) Reports of federal, state and local agencies.

Systems exempted from certain provisions of the act: The Attorney General has exempted this system from subsections (c)(3) and (4), (d), (e)(1), (2) and (3), (e)(4)(G), (H), (e)(5) and (8), (f), (g), (h) of the Privacy Act pursuant to 5 U.S.C. 552a (j) and (k). Rules have been promulgated in accordance with the requirements of 5 U.S.C. 553 (b), (c) and (e) and have been published in the Federal Register.

JUSTICE/DEA-014

System name: System to Retrieve Information from Drug Evidence (STRIDE/Ballistics).

System location: Drug Enforcement Administration; 1405 Eye Street, N. W.; Washington, D. C. 20537. Also, field offices. See Appendix 1 for list of addresses.

Categories of individuals covered by the system: Defendants and suspected violators

Categories of records in the system: Ballistics report.

Authority for maintenance of the system: This system is maintained to provide drug intelligence for law enforcement purposes pursuant to the Comprehensive Drug Abuse Prevention and Control Act of 1970 and Reorganization Plan No. 2 of 1973.

Routine uses of records maintained in the system, including categories of users and the purposes of such uses: Information from this system is provided to the following categories of users for law enforcement purposes on a routine basis: A) Other federal law enforcement agencies; B) State and local law enforcement agencies; C) Foreign law enforcement agencies with whom DEA maintains liaison.

Release of information to the news media: Information permitted to be released to the news media and the public pursuant to 28 C.F.R. 50.2 may be made available from systems of records maintained by the Department of Justice unless it is determined that release of the specific information in the context of a particular case would constitute an unwarranted invasion of personal privacy.

Release of information to Members of Congress. information contained in systems of records maintained by the Department of Justice, not otherwise required to be released pursuant to 5 U.S.C. 552, may be made available to a Member of Congress or staff acting upon the Member's behalf when the Member or staff requests the information on behalf of and at the request of the individual who is the subject of the record.

Release of information to the National Archives and Records Service: A record from a system of records may be disclosed as a routine use to the National Archives and Records Service (NARS) in records management inspections conducted under the authority of 44 U.S.C. 2904 and 2906.

Policies and practices for storing, retrieving, accessing, retaining, and disposing of records in the system:

Storage: The information is stored on magnetic tape.

Retrievability: The system is indexed by case number and subject name. The information can be retrieved by name or DEA case number. In addition, a number of telecommunication terminals have been added to the existing network.

Safeguards: This system of records is maintained at DEA headquarters which is protected by twenty-four hour guard service and electronic surveillance. Access to the building is restricted to DEA employees and those persons transacting business within the building who are escorted by DEA employees. Access to the system is restricted to authorized DEA employees with appropriate clearance on a need-to-know Basis. Information that is retrievable by terminals requires user identification numbers which are issued to authorized employees of the Department of Justice.

Retention and disposal: The information contained in this system is retained indefinitely.

System manager(s) and address: Chief, Forensic Sciences Division; Drug Enforcement Administration; 1405 Eye Street, N.W.; Washington, D.C. 20537.

Notification procedure: *Inquiries should be addressed to: Freedom of Information Unit, Drug Enforcement Administration, 1405 I Street, N.W., Washington, D.C. 20537*

Record access procedures: *Same as above.*

Contesting record procedures: *Same as above.*

Record source categories: DEA Reports; Scientific Analysis.

Systems exempted from certain provisions of the act: The Attorney General has exempted this system from subsections (c)(3) and (4), (d), (e)(1), (2) and (3), (e)(4)(G), (H), (e)(5) and (8), (f), (g), (h) of the Privacy Act pursuant to 5 U.S.C. 552a (j). Rules have been promulgated in accordance with the requirements of 5 U.S.C. 553 (b), (c) and (e) and been published in the Federal Register.

Justice Management Division (JMD)

Justice Management Division systems of records were published on September 28, 1978, as Office of Management and Finance (OMF) systems of records. However, as a result of a recent reorganization the name of the Office of Management and Finance was changed to "Justice Management Division." In addition, other suborganizational titles were also changed. The Justice Management Division systems of records reprinted below reflect these changes along with other minor changes and clarifications. Systems of records identified as JMD-001 through 003, JMD-007 through JMD-013, JMD-015, and JMD-017 through JMD-019 are reprinted below. (Systems of records identified prior to the reorganization as OMF-004 through OMF-006 were rescinded by notice in volume 43 of the FEDERAL REGISTER on December 7, 1978; system OMF-014 by notice in volume 43 of the FEDERAL REGISTER on September 28, 1978; system OMF-016 by notice in volume 44 of the FEDERAL REGISTER on April 19, 1979.)

JUSTICE/JMD-001

System name: Background Investigation Check-off Card.

System location: U.S. Department of Justice; 10th and Constitution Avenue, N.W.; Washington, D.C. 20530.

Catgegories of individuals covered by the system: All employees of the Offices, Boards, and Divisions except attorneys and employees in the Offices of the Attorney General and Deputy Attorney General.

Categories of records in the system: The system contains an index card for each employee of the Offices, Boards, and Divisions, except those excluded in Categories of Individuals above, on whom a name and fingerprint or background investigation has been initiated.

Authority for maintenance of the system: The system is established and maintained in order to fulfill the requirements of Executive Order 10450.

Routine uses of records maintained in the system, including categories of users and the purposes of such uses: The index cards are used to annotate and monitor the progress of the name and fingerprint checks and the full field character investigations of the employes. The completed cards are used to develop a variety of workload and timeframe data concerning the initiation and completion of these investigations to enlsure that the requirements of Executive Order 10450 and Department of Justice Order 17321 are being effectively and efficienty met.

Release of information to the news media: Information permitted to be released to the news media and the public pursuant to 28 CFR 502 may be made available from systems of records maintained by the Department of Justice unless it is determined that release of the specific information in the context of a particular case would constitute an unwarranted invasion of personal privacy.

Release of information to Members of Congress: Information contained in systems of records maintained by the Department of Justice, not otherwise required to be released pursuant to 5 U.S.C. 552, may be made available to a Member of Congress or staff acting upon the Member's behalf when the Member or staff requests the information on behalf of and at the request of the individual who is subject to the record.

Release of information to the National Archives and Records Service: A record from a system of records may be disclosed as a routine use to the National Archives and Records Service (NARS) in records management inspections conducted under the authority of 44 U.S.C. 2904 and 2906.

Policies and practices for storing, accessing, retaining, and disposing of records in the system:

Storage: Information maintained in the system is manually stored in the boxes.

Retrievability: Information is retrieved manually by reference to the name of the employee on whom the investigation is being conducted.

Safeguards: Information contained in the system is unclassified. It is safeguarded and protected in accordance with Personnel Section policies and procedures.

Retention and disposal: The index cards are retained by the Personnel Section Teams for a period of one year after completion of the background investigation. The cards are then forwarded to the Personnel Programs Unit where they are retained for one additional year and are then destroyed.

System manager(s) and address: *Director, Personnel and Training Staff Justice Management Division,* U.S. Department of Justice, 10th and Constitution Avenue, NW., Washington, D.C. 20530.

Notification procedure: Same as the System Manager.

Record access procedures: Same as the System Manager.

Contesting record procedures: Same as the System Manager.

Record source categories: The sources of information contained in this system are those Personnel Section employees authorized to annotate these cards. Information reported is extracted from personnel documents initiating the various investigations and the resulting reports of completion.

Systems exempted from certain provisions of the act: None.

JUSTICE/OMF-002

System name: Controlled Substances Act Nonpublic Records.

System location: U.S. Department of Justice, 10th and Constitution Avenue NW., Washington, D.C. 20530.

Categories of individuals covered by the system: Persons who have been convicted for the first time of violating Section 404(a) of the Controlled Substances Act (Public Law 91-513), i.e. persons who have knowingly or intentionally possessed a controlled substance except as authorized by the act.

Categories of records in the system: Arrest records of law enforcement agencies, which include personal data, photographs, fingerprints, copies of court orders, DOJ-330 Request for Non-Public Records and/or DOJ-329 Certificate of Expungement.

Authority for maintenance of the system: This system is established and maintained in accordance with the Controlled Substances Act, Public Law 91-513 Sec. 404, 21 U.S.C. 844.

Routine uses of records maintained in the system, including categories of users and the purposes of such uses: These records are retained by the Department of Justice and are available only to a Federal court upon a Federal court order issued to the Attorney General demanding such records for use by said court in determining whether or not a person qualified under Public Law 91-513 Sec. 404(b), 21 U.S.C. 844(b).

Release of information to the news media: Information permitted to be released to the news media and the public pursuant to 28 CFR 50.2 may be made available from systems of records maintained by the Department of Justice unless it is detrmined that release of the specific information in the context of a particular case would constitute an unwarranted invasion of personal privacy.

Release of information to Members of Congress: Information contained in systems of records maintained by the Department of Justice, not otherwise required to be released pursuant to 5 U.S.C. 552, may be made available to a Member of Congress or staff acting upon the Member's behalf when the Member or staff requests the information on behalf of and at the request of the individual who is the subject of the record.

Release of information to the National Archives and Records Service: A record from a system of records may be disclosed as a routine use to the National Archives and Records Service (NARS) in records management inspections conducted under the authority of 44 U.S.C. 2904 and 2906.

Policies and practices for storing, retrieving, accessing, retaining, and disposing of records in the system:

Storage: These records are stored in locked file cabinets.

Retrievability: These records are indexed by the name of the offender.

Safeguards: Access to these records is restricted to the Chief, Records Maintenance and Disposition Section and the assistant to the Chief.

Retention and disposal: Although these records will ultimately be destroyed by shredding, the establishment of a disposal schedule is still pending.

System manager(s) and address: *Director, Records and Publications Staff, Office of Personnel and Administration, Justice Management Division,* U.S. Department of Justice, 10th & Constitution Avenue NW., Washington, D.C. 20530.

Notification procedure: Same as the System Manager.

Record access procedures: Same as the System Manager.

Contesting record procedures: Same as the System Manager.

Record source categories: Law enforcement agencies and courts.

Systems exempted from certain provisions of the act: The Attorney General has exempted the system from subsection (d) of the Privacy Act pursuant to 5 U.S.C. 552a(j)(2). Rules have been promulgated in accordance with the requirements of 5 U.S.C. 553 (b), (c) and (e) and have been published in the Federal Register.

JUSTICE/JMD-003

System name: Department of Justice Payroll System.

System location: Categories of records within the Payroll System of Records are kept at the following locations: (1) Justice Employee Data Service; 425 I Street, N.W.; Washington, D.C. 20530; (2) Justice Data Management Service; 425 I Street, N.W.; Washington, D.C. 20530; (3) at various time and attendance recording and processing stations around the world; (4) at computerized record off-site backup facilities; and (5) at various Federal Records Centers.

Categories of individuals covered by the system: (1) Current DOJ employees with the exception of those employed within the FBI and; (2) Many past DOJ employees with the exception of those that served within the FBI.

Categories of records in the system: A. Payroll Master Employee Records: These are machine-readable records containing information on current pay and leave status for individuals serviced by the automated payroll accounting system.

B. Bond, Allotment and Check Mailing Records: These are machine-readable records containing information on Savings Bond deductions, savings account allotments, and net check mailing requested by the employee.

C. History of Earning Records: These are machine-readable records containing information on earnings, leave and other pay related activities during a two-year period.

D. Automated Retirement Records: These are machine-readable records containing information relevant to the Civil Service Retirement System. These records will be used to automatically generate Individual Retirement Records (SF-2806) upon an employee's separation.

E. Revised Social Security Numbers Records: These are machine-readable records containing the new and old social security number for employees whose current social security number is different from that previously entered into the automated system.

F. Employee Pay Records: These are manila folders containing all source documents, correspondence and other papers in support of an active employee's pay, leave and allowances.

G. Active Retirement Records: These are manual records maintained on active employees to facilitate timely compliance with requirements of the Civil Service Retirement System. Upon separation, the original SF-2806 is forwarded to the Civil Service Commission and a copy is filed in the Employee Pay Record (F above). This category of records will eventually be replaced by the automated retirement records (D above).

H. Former Employee Pay Records: These records are the Employee Pay Records (F above) for employees that have been separated, transferred or retired. In addition to information contained in the Employee Pay Records, these records include information related to the retirement, separation or transfer.

I. Employee Death Records: These records are the Employee Pay Records (F above) for employees that died while on active duty with Department of Justice. In addition to information contained in the Employee Pay Records, these records include information related to the employee's death and the settlement of pending pay and allowances.

J. Returned Check Records: These records are a manual log for recording and controlling checks issued to employees that were returned to the Justice Employee Data Service because they were undelivered, erroneous or cancelled prior to conversion to cash.

K. Time and Attendance Report: These records contain information on an employee's attendance and use of leave in a particular pay period. They are also used to indicate leave adjustments and balances. The standard form number is DOJ-296.

Authority for maintenance of the system: The head of each executive agency is responsible for establishing and maintaining an adequate payroll system, covering pay, leave, and allowances, as a part of the system of accounting and internal control of the Budget and Accounting Procedures Act of 1950, as amended, 31 U.S.C. 66, 66a and 200(a).

Routine uses of records maintained in the system, including categories of users and the purposes of such uses: Purpose: The purpose of each use of categories of records within the DOJ Payroll System of Records is to enable the administration of the payroll function and related financial matters in accordance with applicable laws and regulations and to comply with the requirements of the Comptroller General.

System Uses:

A. Authorize, prepare and document payment to all Department employees covered by the DOJ Payroll System entitled to be paid, with consideration given to all authorized deductions from gross pay.

B. Specify and document proper disposition of all authorized deductions from gross pay.

C. Prepare adequate and reliable payroll reports needed for (1) management, (2) budget, (3) support of payments, (4) the conduct and accounting of payroll related employee services, (5) control and documentation of payroll system operation, and (6) to meet external reporting requirements.

D. Support effective communications on payroll matters between the Department of Justice and its present and former employees.

E. Support proper coordination of pay, leave and allowance operations with personal functions and other related activities.

F. Support adequate control over all phases and segments of the payroll system including leave accounting.

G. Support appropriate integration of the payroll system with the Departmental accounting systems.

H. Records maintained in this system shall include providing a copy of an employee's Department of the Treasury Form W-2, Wage and Tax Statement of the State, City, or other local jurisdiction which is authorized to tax the employee's compensation. The record will be provided in accordance with a withholding agreement between the State, City, or other local jurisdiction and the Department of the Treasury pursuant to 5 USC 5516, 5517, and 5520 or in the absence thereof, in response to a written request from an appropriate official of the taxing jurisdiction to the System Manager listed below. The request must include a copy of the applicable statute authorizing the taxation of compensation and should indicate whether the authority of the jurisdiction to tax the employee is based on place of residence, place of employment, or both. However, the social security numbers will only be provided to state or local taxing authorities which meet the criteria of the Privacy Act.

I. Provide permanent record of actions taken pertinent to the administration of pay leave and allowances.

J. Support legal investigations of suspected fraud.

Categories of Users: Records are accessed by users on a need or right to know basis. A category of users may have potential access under more than one use above.

A. Present or former employees serviced by the DOJ Payroll System.

B. Justice Employees Data Service Staff.

C. Department of the Treasury disbursing offices.

D. Department of Justice budget and accounting offices.

E. Department of Justice personnel offices.

F. Employee supervisors.

G. Employee administrative offices.

H. Federal, state and local taxing authorities.

I. Federal Employees Health Benefits carriers.

J. Employee organization offices participating in dues allotment program.

K. Financial organizations participating in savings account allotment program.

L. Financial organizations participating in net pay to checking account program.

M. State human resource offices administering unemployment compensation programs.

N. General Accounting Office and internal audit staffs.

O. Federal, state or local law enforcement agencies (in support of legal investigations of suspected fraud).

P. Other Federal agencies requiring information as specified in applicable laws or regulations, e.g., Civil Service Commission).

Q. Heirs, executors and legal representatives of beneficiaries.

Release of information to the news media: Information permitted to be released to the news media and the public pursuant to 28 C.F.R. 50.2 may be made available from systems of records maintained by the Department of Justice unless it is determined that release of the specific information in the context of a particular case would constitute an unwarranted invasion of personal privacy.

Release of information to Members of Congress: Information contained in systems of records maintained by the Department of Justice, not otherwise required to be released pursuant to 5 U.S.C. 552, may be made available to a Member of Congress or staff acting upon the Member's behalf when the Member or staff requests the information on behalf of and at the request of the individual who is the subject of the record.

Release of information to the National Archives and Records Service. A record from a system of records may be disclosed as a routine use to the National Archives and Records Service (NARS) in records management inspections conducted under the authority of 44 U.S.C. 2904 and 2906.

Policies and practices for storing, retrieving, accessing, retaining, and disposing of records in the system:

Storage: Various categories of records are stored on different mediums. Categories A, B and E are on magnetic discs. Categories C and D are on magnetic tape. All other records are maintained in paper form.

Retrievability: Categories of records on magnetic media are retrievable by employee social security number which is maintained to comply with Internal Revenue requirements. Records in paper form are retrievable by employee name and social security number.

Safeguards: The principal current safeguard for payroll records is guard force screening of individuals entering buildings within which records are kept. More stringent security practices and procedures are under development.

Retention and disposal: Payroll records retention and disposal are in accordance with General Schedule 2 promulgated by the General Services Administration.

System manager(s) and address: Director; *Systems Operations Staff, Justice Management Division;* U.S. Department of Justice; 10th and Constitution Avenue, N.W., Washington, D.C. 20530.

Notification procedure: A request for notification of the existence of records upon an individual shall be made in writing by the individual or legal designate, with the envelop and the letter clearly marked 'Privacy Notification Request'. Include in the request the name of the system of records, the individual's full name and social security number while employed with the Department of Justice, the organization within which employed (if available), and whether the individual is a current or former employee. The requestor shall include a return address for the notification response. If the request is submitted by other than the subject individual, indicate the authority under which the information is sought. The request must be signed by the subject individual and, if applicable, by the legal designee. Address inquires to the System Manager.

Record access procedures: A request for access to records from this system shall be made in writing by the subject individual or legal designee, with the envelope and the letter clearly marked 'Privacy Access Request'. Include in the request the name of the system of records, the legal name and social security number of the data subject, the organization within which the individual is a current or former employee. The requestor shall also provide a return address for transmitting the information. Access requests will be directed to the System Manager listed above.

Contesting record procedures: Individuals desiring to contest or amend information maintained in the system of records should direct their request to the System Manager listed above, stating clearly and concisely what information is being contested, the reason for contesting it, and the proposed amendment to the information sought. If the request is submitted by other than the subject individual, indicate the authority under which the information is sought. The request must be signed by the subject individual and, if applicable, by the legal designee.

Record source categories: Information contained within the DOJ Payroll System of Records is obtained from the following sources:

A. Subject Individual: Information collected from the subject individual generally consists of that necessary to administer allotments, deductions or other services requested by the individual.

B. Personnel Office: Information collected from the personnel office generally consists of employment status information which provides the legal basis upon which valid payments are computed.

C. Time and Attendance Clerk: Information collected from this clerk generally consists of an accounting of the individual's presence or absence from the duty station and the usage of leave.

D. Supervisor or Administrative Officer: Information collected from these officers generally consists of leave authorizations and information concerning the individual's duty station.

E. Financial Institutions or Employee Organizations: Information collected from institutions or organizations generally consists of that necessary to insure the timely and accurate forwarding to the institution or organization of monies allotted to an account at the institution or organization by the subject individual.

F. Previous Federal Employer: Information collected from the previous employer within the Federal government generally consists of leave status information at the time of separation.

G. Other Federal Agencies: Information collected from other Federal agencies generally consists of program information necessary to properly administer pay, leave, and allowances.

H. Other Officials: Information collected from other officials consists of that necessary to administer the payroll function. This may include authorization for special payments, death certificate or other documents as necessary.

Systems exempted from certain provisions of the act: None.

JUSTICE/JMD—007

System name: Legal and General Administration Accounting System (LAGA).

System location: U.S. Department of Justice; 10th and Constitution Avenue, N.W.; Washington, D.C. 20530.

Categories of individuals covered by the system: All individuals who submit vouchers requesting payment for goods or services rendered, except payroll vouchers for DOJ employees. These include vendors, contractors, experts, witnesses, court reporters, travelers, relocated employees, etc.

Categories of records in the system: All vouchers paid except payroll vouchers for DOJ employees.

Authority for maintenance of the system: The system is established and maintained in accordance with the Budget and Accounting Procedures Act of 1950 as amended 31 U.S.C. 66(a) and 31 U.S.C. 200(a).

Routine uses of records maintained in the system, including categories of users and the purposes of such uses: After payment of the vouchers, the accounting data is used for the purpose of internal management reporting and external reporting to agencies such as OMB, U.S. Treasury, and the GAO.

Release of information to the news media: Information permitted to be released to the news media and the public pursuant to 28 C.F.R. 50.2 may be made available from systems of records maintained by the Department of Justice unless it is determined that release of the specific information in the context of a particular case would constitute an unwarranted invasion of personal privacy.

Release of information to Members of Congress: Information contained in systems of records maintained by the Department of Justice, not otherwise required to be released pursuant to 5 U.S.C. 552, may be made available to a Member of Congress or staff acting upon the Member's behalf when the Member or staff requests the information on behalf of and at the request of the individual who is the subject of the record.

Release of information to the National Archives and Records Service: A record from a system of records may be disclosed as a routine use to the National Archives and Records Service (NARS) in records management inspections conducted under the authority of 44 U.S.C. 2904 and 2906.

Policies and practices for storing, retrieving, accessing, retaining, and disposing of records in the system:

Storage: Prior to FY 76, voucher files were maintained alphabetically by payee's name. After FY 76, vouchers are filed by batch, controlled by schedule on which paid.

Retrievability: Information is retrieved primarily by using the name of the payee.

Safeguards: Information contained in the system is unclassified. It is safeguarded in accordance with organizational rules and procedures.

Retention and disposal: The payment documents are retained at this location for three fiscal years (current year and two prior years). The records are then shipped to a Federal Records Center for storage in accordance with the General Record Schedule published by the General Services Administration.

System manager(s) and address: Director; *Finance Staff; Office of the Controller; Justice Management Division;* U.S. Department of Justice; 10th & Constitution Avenue, N.W.; Washington, D.C. 20530.

Notification procedure: Same as the System Manager.

Record access procedures: Same as the System Manager.

Contesting record procedures: Same as the System Manager.

Record source categories: Submitted by the payee involved.

Systems exempted from certain provisions of the act: None.

JUSTICE/*JMD*-008

System name: Security Clearance Information System (SCIS).

System location: U.S. Department of Justice, 10th and Constitution Avenue, N.W., Washington, D.C. 20530.

Categories of individuals covered by the system: A. Current employees of the Department of Justice (excluding FBI) who have been investigated and cleared for employment, and for accesss to data classified for National Security reasons; B. Former employees of the Department of Justice (excluding FBI) who had been investigated and cleared for employment and for access to data classified for National Security reasons (maintained for a maximum of *one year* from date of termination).

Categories of records in the system: The system contains two subsystems: (a) a Clearance Index Reference Record which is an automated system for identifying the individuals in Categories of Individuals above listing the status *and types* of investigations, the dates of clearances, level of clearances and *level of Special Intelligence access approvals,* and (b) a Character File *(excluding FBI and Department attorneys)* containing (1) Standard form 86 (*(Office of Personnel Management),* Security Investigation Data for Sensitive Position; (2) Copies of investigative reports from the *Office of Personnel Management* and/or Federal Bureau of Investigation; (3) Correspondence related to the request for the investigation, results of the investigation, and clearance approvals for access to classified national security information and waivers; and (4) other information relating to the trustworthiness of the employee.

Authority for maintenance of the system: The system is established and maintained in accordance with Presidential Executive Orders 10450 (clearance for Federal employment) and 12065 (access to data classified for National Security reasons).

Routine uses of records maintained in the system, including categories of users and the purposes of such uses: (a) The investigative material compiled in this system is used for the purpose of determining the suitability, eligibility and/or qualifications of applicants for employment in the Department of Justice (except the FBI) and for sensitive positions involving access to classified information. In the event of employee transfers to other Government Agencies, this information could be reviewed by investigators of the gaining agency to expedite the employee transfer *if* necessary.

(b) The clearance status of the employees is certified to security officials and investigators of other U.S. Government Agencies or Departments for liaison purposes involving access to classified material during meetings, conferences or training courses.

(c) The personal data in the system *may be* reviewed by Central Intelligence Agency for the purposes of granting Special Intelligence access *approvals* to Department employees. These *access approvals* are within the purview of the Director, Central Intelligence Agency.

Release of information to the news media: Information permitted to be released to the news media and the public pursuant to 28 C.F.R. 50.2 may be made available from systems of records maintained by the Department of Justice unless it is determined that release of the specific information in the context of a particular case would constitute an unwarranted invasion of personal privacy.

Release of information to Members of Congress: Information contained in systems of records maintained by the Department of Justice, not otherwise required to be released pursuant to 5 U.S.C. 552 may be made available to a Member of Congress or staff acting upon the Member's behalf when the Member or staff requests the information on behalf of and at the request of the individual who is the subject of the record.

Release of information to the National Archives and Records Service: A record from a system or records may be disclosed as a routine use to the National Archives and Records Service (NARS) in records management inspections conducted under the authority of 44 U.S.C. 2904 and 2906.

Policies and practices for storing, retrieving, accessing, retaining, and disposing of records in the system:

Storage: Information contained on the Clearance Index Reference Record has been added to the automated Department of Justice personnel data base which has been reported by the *Office of Personnel Management* under the designation of CSC/GOVT-3 at 42 FR 48738 on September 23, 1977. In conjunction with the manual Character File, the automated data is used to certify clearances on DOJ employees.

Retrievability: All data is retrieved by searching under the employee's name/social security account number/organization/type of clearance.

Safeguards: Information contained in the system *includes some classified National Security Information. It is* safeguarded and protected in accordance with Departmental rules and procedures governing the protection of this material.

Retention and disposal: Clearance Index Reference Record *is* maintained for the tenure of employment and for a maximum of *one pay period* after termination. An employee's Character File is maintained for the tenure of employment *and for a maximum of one year after termination* at which time the investigation reports are returned to the investigating agency or destroyed by shredding.

System manager(s) and address: Director, *Security Programs Staff, Justice Management Division,* U.S. Department of Justice, 10th and Constitution Avenue, N.W., Washington, D.C. 20530.

Notification procedures: Same as the System Manager.

Record access procedures: A request for access to a record from this system shall be made in writing *to the System Manager* with the envelope and the letter clearly marked "Privacy Access Request." Include in the request the name, title and organization of the employee and the general subject matter of the inquiry. The requestor will also provide a return address for transmitting a reply. *Requests for copies of investigative reports must be directed to the Office of Personnel Management of the Federal Bureau of Investigation, as appropriate.*

Contesting record procedures: Individuals desiring to contest or amend information maintained in the system should direct their request to the System Manager listed above, stating clearly and concisely what information is being contested, the reasons for contesting it, and the proposed amendment to the information sought.

Record source categories: Sources of information contained in this system are (a) applicants for employment and employees in the Department of Justice (except FBI) and (b) those individuals (informants) contacted by the Investigators for the *Office of Personnel Management* and Special Agents of the Federal Bureau of Investigation who furnished information in the background investigation.

Systems exempted from certain provisions of the act: The Attorney General has exempted this system from sections (d)(1) of the Privacy Act pursuant to 5 U.S.C. 552a(k)(5). Rules have been promulgated in accordance with the requirements of 5 U.S.C. 533 (b), (c) and (e) and have been published in the FEDERAL REGISTER.

JUSTICE/JMD-009

System name: Justice Data Management Service Center Utilization Report.

System location: Justice Data Management Service Center; 425 I Street NW., Washington, D.C. 20530.

Categories of individuals covered by the system: Personnel submitting computer jobs to run at the Justice Data Management Service.

Categories of records in the system: The data describes the recource utilization of the individual jobs submitted. Certain information is also recorded which pertains to the entire computer system rather than individual jobs.

Authority for maintenance of the system: These records are kept for adminstrative convenience pursuant to 5 U.S.C. 301.

Routine uses of records maintained in the system, including categories of users and the purposes of such uses: Information is used to recover costs associated with running computer jobs, to analyze the utilization of the Justice Data Management Service computer systems, detect inefficiencies and areas having high potential benefit from optimization.

Release of information to the news media: Information permitted to be released to the news media and the public pursuant to 28 CFR 50.2 may be made available from systems of records maintained by the Department of Justice unless it is determined that release of the specific information in the context of a particular case would constitute an unwarranted invasion of personal privacy.

Release of information to Members of Congress: Information contained in systems of records maintained by the Department of Justice, not otherwise required to be released pursuant to 5 U.S.C. 552, may be made available to a Member or staff requesting the information on behalf of and at the request of the individual who is the subject of the record.

Release of information to the National Archives and Records Service: A record from a system of records may be disclosed as a routine use to the National Archives and Records Service (NARS) in records management inspections conducted under the authority of 44 U.S.C. 2904 and 2906.

Policies and practices for storing, retrieving, accessing, retaining, and disposing of records in the system:

Storage: Utilization reports are provided to a designated manager for each organization which uses the Justice Data Management Service.

Retrievability: Information may be retrieved by name of the individual submitting computer runs.

Safeguards: The machine readable (magnetic tape) data is kept in the Justice Data Management Service tape library. Utilization reports are controlled by the designated individual of each using agency.

Retention and disposal: The machine readable data is kept indefinitely. Utilization reports are controlled by the designated individual of each using agency.

System manager(s) and address: Director: *Systems Operations Staff, Justice Management Division U.S. Department of Justice;* 10th and Constitution Avenue NW., Washington, D.C. 20530.

Notification procedure: Same as above.

Record access procedures: A request for access to a record from this system may be made in person or in writing, specifying the name of the individual submitting a computer run and the date and name of the computer run.

Contesting record procedures: Requests for correction should be addressed to the System Manager.

Record source categories: Information is collected by the IBM 360/370 Operating System and program modules developed by personnel of the Department of Justice.

Systems exempted from certain provisions of the act: None.

JUSTICE/JMD-010

System name: Document Information System. (DIS)

System location: U.S. Department of Justice; 10th and Constitution Avenue N.W., Washington, D.C. 20530.

Categories of individuals covered by the system: Employees of the Department of Justice who have been designated by the Attorney General as authorized to classify documents. Employees of the Department of Justice who have been delegated classifying authority by designation of the Attorney General. Individuals (mostly aliens) about whom documents exist which have been classified in the interest of national security.

Categories of records in the system: The system contains records of all documents classified by Department of Justice employees. The system also contains a record on all Department of Justice employees (from January 1, 1973 to present) who have or have had the authority to classify documents.

Authority for maintenance of the system: The system was established and is maintained pursuant to Executive Order 11652.

Routine uses of records maintained in the system, including categories of users and the purposes of such uses: The system is routinely used by the Interagency Classification Review Committee, the Department of Justice Security Staff, and the Department of Justice Review Committee.

Release of information to the news media: Information permitted to be released to the news media and the public pursuant to 28 C.F.R. 50.2 may be made available from systems of records maintained by the Department of Justice unless it is determined that release of the specific information in the context of a particular case would constitute an unwarranted invasion of personal privacy.

Release of information to Members of Congress: Information contained in systems of records maintained by the Department of Justice, not otherwise required to be released pursuant to 5 U.S.C. 552, may be made available to a Member of Congress or staff acting upon the Member's behalf when the Member or staff requests the information on behalf of and at the request of the individual who is the subject of the record.

Release of information to the National Archives and Records Service: A record from a system of records may be disclosed as a routine use to the National Archives and Records Service (NARS) in records management inspections conducted under the authority of 44 U.S.C. 2904 and 2906.

Policies and practices for storing, retrieving, accessing, retaining, and disposing of records in the system:

Storage: Information is stored in machine readable form on magnetic tape. A copy of the data capture form is maintained in the originating office for two weeks, then destroyed. The original data capture form is maintained at the Department until data contained therein has been successfully processed, then the form is destroyed.

Retrievability: Information is retrieved in any form for all routine uses. Information may be retrieved for non-routine uses with the approval of the Director, Central Management Services Staff, and in accordance with the provisions of the Privacy Act.

Safeguards: Access to information contained in the system is controlled by the Director, *Systems Operations Staff, Justice Management Division.* Access is normally limited to routine users and members of the *Systems Operations Staff,* on a "need-to-know" basis.

Retention and disposal: Records contained in the system are retained indefinitely. The system of records is never purged and no disposal schedule is required.

System manager(s) and address: Director; *Systems Operations Staff, Justice Management Division;* U.S. Department of Justice; 10th and Constitution Avenue, N.W., Washington, D.C. 20530.

Notification procedure: Address inquiries to the System Manager.

Record access procedures: Same as the System Manager.

Contesting record procedures: Same as the System Manager.

Record source categories: Employees of the Department who have been designated by the Attorney General as classifying officials and employees who have been delegated classifying authority.

Systems exempted from certain provisions of the act: None.

JUSTICE/JMD-011

System name: Justice Data Management Service Center Tape Library System.

System location: Justice Data Management Service; 425 I Street, N.W.; Washington, D.C. 20530.

Categories of individuals covered by the system: Personnel submitting computer jobs which create magnetic tape data sets.

Categories of records in the system: The data describes the contents of the magnetic tape volumes.

Authority for maintenance of the system: These records are kept for administrative convenience pursuant to 5 U.S.C. 301.

Routine uses of records maintained in the system, including categories of users and the purposes of such uses: Information is used to control and protect the data recorded on magnetic tapes.

Release of information to the news media: Information permitted to be released to news media and the public pursuant to 28 CFR 50.2 may be made available from systems of records maintained by the Department of Justice unless it is determined that release of the specific information in the context of a particular case would constitute an unwarranted invasion of personal privacy.

Release of information to Members of Congress: Information contained in systems of records maintained by the Department of Justice, not otherwise required to be released pursuant to 5 U.S.C. 552, may be made available to a Member of Congress or staff acting upon the Member's behalf when the Member or staff requests the information on behalf of and at the request of the individual who is the subject of the record.

Release of information to the National Archives and Records Service: A record from a system of records may be disclosed as a routine use to the National Archives and Records Service (NARS) in records management inspections conducted under the authority of 44 U.S.C. 2904 and 2906.

Policies and practices for storing, retrieving, accessing, retaining, and disposing of records in the system:

Storage: Reports can be obtained by any Justice Data Management Service user by submitting a computer job requesting the report.

Retrievability: Information can be obtained by name of the individual who submitted the job which created the tape resident data sets.

Safeguards: The machine readable data is kept within the Justice Data Management Service. Reports are controlled by the tape librarian and by the individuals receiving the reports.

Retention and disposal: Reports are controlled by the tape librarian and by the individuals receiving the reports.

System manager(s) and address: Director; *Systems Operations Staff, Justice Management Division, U.S. Department of Justice,* 10th and Constitution Avenue, N.W.; Washington, D.C. 20530.

Notification procedure: Same as the System Manager.

Record access procedures: A request for access/correction to a record from this system may be made in person or in writing specifying the serial number of the tape in question. Request should be addressed to the System Manager.

Contesting record procedures: Same as the above.

Record source categories: Information is collected by the IBM 360/370 Operating System and other program modules.

Systems exempted from certain provisions of the act: None.

JUSTICE/JMD-012

System name: Executive Biography.

System location: U.S. Department OF Justice; 10th and Constitution Avenue, N.W.; Washington, D.C. 20530.

Categories of individuals covered by the system: Officials of the Department of Justice, *in the Senior Executive Service and* generally in grades GS-16 through Executive Level I, who hold key administrative and/or managerial positions within the Department.

Categories of records in the system: The file consists of biographical sketches of key staff officials of the Department and includes: position, title, grade, date of birth, education, professional experience, honors and awards, and professional associations and bar membership.

Authority for maintenance of the system: The file is maintained pursuant to 5 U.S.C. 301 and 44 U.S.C. 3101.

Routine uses of records maintained in the system, including categories of users and the purposes of such uses: The file is used to obtain information on the background and qualifications of key staff members for the purpose of acquainting top management officials of the Department of Justice with key members of their staff.

Release of information to the news media: Information permitted to be released to the news media and the public pursuant to 28 C.F.R. 50.2 may be made available from systems of records maintained by the Department of Justice unless it is determined that release of the specific information in the context of a particular case would constitute an unwarranted invasion of personal privacy.

Release of information to Members of Congress: Information contained in systems of records maintained by the Department of Justice, not otherwise required to be released pursuant to 5 U.S.C. 552, may be made available to a Member of Congress or staff acting upon the Member's behalf when the Member or staff requests the information on behalf of and at the request of the individual who is the subject of the record.

Release of information to the National Archives and Records Service: A record from a system of records may be disclosed as a routine use to the National Archives and Records Service (NARS) in records management inspections conducted under the authority of 44 U.S.C. 2904 and 2906.

Policies and practices for storing, retrieving, accessing, retaining, and disposing of records in the system:

Storage: Records are maintained in file folders.

Retrievability: Records are maintained by position and by organization. A periodic report with a distribution limited to ten, top management officials of the Department is produced from the file.

Safeguards: Records are maintained in a locked file cabinet. All information in the records is limited to those persons within the Department whose official duties require such access.

Retention and disposal: Records are maintained as long as the incumbent remains in a position which is covered by the system. If the incumbent's employment in a covered position ceases, his record is retained for three years and then destroyed.

System manager(s) and address: *Deputy Assistant Attorney General for Personnel and Administration, Justice Management Division, U.S. Department of Justice 10th & Constitution Avenue, N.W., Washington, D.C. 20530.*

Notification procedure: Same as System Manager.

Record access procedures: Same as Notification.

Contesting record procedures: Same as Notification.

Record source categories: Information in this system of records is voluntarily provided by the individual to whom it applies, or is derived from personnel record information he or she supplied.

Systems exempted from certain provisions of the act: None.

JUSTICE/JMD-013

System name: Employee Locator File.

System location: U.S. Department of Justice; 10th and Constitution Avenue, N.W.; Washington, D.C. 20530.

Categories of individuals covered by the system: All employees of the U.S. Department of Justice, with the exception of individuals employed by the Federal Bureau of Investigation.

Categories of records in the system: The system contains information relating to each employee's home and business address, home and business telephone number, information as to next of kin, and personal physician preferred in case of medical emergency.

Authority for maintenance of the system: The system is maintained pursuant to 5 U.S.C. 301, 5 U.S.C. 7901, 26 U.S.C. 6011, 26 U.S.C. 6109, 5 U.S.C. 5516, 5 U.S.C. 5517 and 5 U.S.C. 5520.

Routine uses of records maintained in the system, including categories of users and the purposes of such uses: The locator system is used to provide address data to federal, state and local tax authorities

in accordance with the reporting requirements of their income tax withholding programs. The locator system is also used to contact employees of the Department at their official place of business or their residence regarding matters of an official nature relating to their employment with the Department of Justice. It is also used in medical emergencies to contact an employee's personal physician if he or she has an indicated preference, and to notify next of kin. Use of the file for these purposes is limited to supervisors of the employees concerned or individuals having the permission of a supervisor of the employee concerned.

Release of information to the news media: Information permitted to be released to the news media and the public pursuant to 28 C.F.R. 50.2 may be made available from systems of records maintained by the Department of Justice unless it is determined that release of the specific information in the context of a particular case would constitute an unwarranted invasion of personal privacy.

Release of information to Members of Congress: Information contained in systems of records maintained by the Department of Justice, not otherwise required to be released pursuant to 5 U.S.C. 552, may be made available to a Member of Congress or staff acting upon the Member's behalf when the Member or staff requests the information on behalf of and at the request of the individual who is the subject of the record.

Release of information to the National Archives and Records Service: A record from a system of records may be disclosed as a routine use to the National Archives and Records Service (NARS) in records management inspections conducted under the authority of 44 U.S.C. 2904 and 2906.

Policies and practices for storing, retrieving, accessing, retaining, and disposing of records in the system:

Storage: Records are stored on magnetic tape and magnetic disk.

Retrievability: Records are retrieved by name or any other data item by means of cathode-ray tubes.

Safeguards: Access to terminals is limited to persons with terminal identification numbers. These numbers are issued only to employees who have a need to know in order to perform job functions relating to income tax reporting or personnel matters.

Retention and disposal: Records are retained for the duration of an individual's employment with the Department. They are destroyed upon his or her separation.

System manager(s) and address: *Director, Personnel and Training Staff; Justice Management Division;* U.S. Department of Justice; 10th and Constitution Avenue, N.W.; Washington, D.C. 20530.

Notification procedure: Same as System Manager.

Record access procedures: Same as Notification.

Contesting record procedures: Same as Notification.

Record source categories: Information is supplied by the individual to whom the record pertains.

Systems exempted from certain provisions of the act: None.

JUSTICE/JMD-015

System name: EEO (Equal Employment Opportunity) Volunteer Representative Roster.

System location: U.S. Department of Justice; 10th and Constitution Avenue, N.W.; Washington, D.C. 20530.

Categories of individuals covered by the system: Employees of the Department of Justice who have volunteered to serve as EEO representatives.

Categories of records in the system: The roster provides the representative's name, position, title, organization, office address and telephone number.

Authority for maintenance of the system: The roster was established and is maintained pursuant to the following authorities: 5 CFR Part 713, 28 CFR 42.2(a), and Department of Justice Order 1713.5 (October 30, 1973).

Routine uses of records maintained in the system, including categories of users and the purposes of such uses: The roster is used by Department personnel and applicants for Department jobs who have filed or contemplate filing discrimination complaints based on race, color, religion, sex, national origin, age, or physical limitation.

Release of information to the news media: Information permitted to be released to the news media and the public pursuant to 28 C.F.R. 50.2 may be made available from systems of records maintained by the Department of Justice unless it is determined that release of the specific information in the context of a particular case would constitute an unwarranted invasion of person privacy.

Release of information to Members of Congress: Information contained in systems of records maintained by the Department of Justice, not otherwise required to be released pursuant to 5 U.S.C. 552, may be made available to a Member of Congress or staff acting upon the Member's behalf when the member or staff requests the information on behalf of and at the request of the individual who is the subject of the record.

System manager(s) and address: *Director Equal Employment Opportunity Staff; Justice Management Division; U.S. Department of Justice; 10th and Constitution Avenue, N.W.; Washington, D.C. 20530.*

Notification procedure: Same as System Manager.

Record access procedures: Same as Notification.

Contesting record procedures: Same as Notification.

Record source categories: Information in the file is voluntarily provided by employees who wish to serve as volunteer EEO representatives.

Systems exempted from certain provisions of the act: None.

JUSTICE/JMD-017

System name: Department of Justice Controlled Parking Records.

System location: U.S. Department of Justice; 10th Street and Constitution Avenue, N.W., Washington, D.C. 20530.

Categories of individuals covered by the system: Department of Justice employees who have applied for vehicle parking space which is assigned and controlled by the Department of Justice, per Department of Justice Order 2540.2D, Dec. 20, 1977.

Categories of records in the system: This system contains copies of Form DOJ-362, Department of Justice Parking Space Application (DOJ Space), and Form *DOJ-OT-71*, Department of Justice Parking Space Application (DOJ Carpool Space), which have been completed and submitted by Department of Justice employees.

Authority for maintenance of the system: This system is established and maintained in accordance with Federal Energy Office (FEO) memorandum of January 17, 1974, Federal Management Circular 74-1 of January 21, 1974, and Federal Energy Office memorandum of April 5, 1974, as reflected in Federal Property Management (Temporary) Regulation *D-65 of September 6, 1979.* Operating procedures are contained in Department of Justice Order 2450.2D, Dec. 20, 1977.

Routine uses of records maintained in the system, including categories of users and the purposes of such uses: These records are used to assign, identify and control the use of vehicle parking space for which the Department of Justice is responsible.

Release of information to the news media: Information permitted to be released to the news media and the public pursuant to 28 CFR 50.2 may be made available from systems of records maintained by the Department of Justice unless it is determined that release of the specific information in the context of a particular case would constitute an unwarranted invasion of personal privacy.

Release of information to Members of Congress: Information contained in systems of records maintained by the Department of Justice, not otherwise required to be released pursuant to 5 U.S.C. 552, may be made available to a Member of Congress or staff acting upon the Member's behalf when the Member or staff requests the information on behalf of and at the request of the individual who is the subject of the record.

Release of information to the National Archives and Records Service: A record from a system of records may be disclosed as a routine use to the National Archives and Records Service (NARS) in records management inspections conducted under the authority of 44 U.S.C. 2904 and 2906.

Policies and practices for storing, retrieving, accessing, retaining, and disposing of records in the system:

Storage: These records are stored in a locked file cabinet.

Retrievability: These records are indexed alphabetically, by the last name of the applicant, within the organizational element.

Safeguards: Information contained in this system is unclassified and is disseminated on a need to know basis by the Office of the Director, *Property Management and Procurement Staff, Office of Personnel and Administration, Justice Management Division.*

Retention and disposal: Although these records are currently retained as long as applicants remain as employees of the Department of Justice, the establishment of a disposal schedule is still pending.

System manager(s) and address: *Property Management and Procurement Staff, Office of Personnel and Administration, Justice Management Division;* U.S. Department of Justice; 10th Street and Constitution Avenue, N.W.; Washington, D.C. 20530.

Notification procedure: Same as System Manager.

Record access procedures: Same as System Manager.

Contesting record procedures: Same as System Manager.

Record source categories: Applications from employees.

Systems exempted from certain provisions of the act: None.

JUSTICE/JMD-018

System name: Occupational Health Physical Fitness Files.

System location: U.S. Department of Justice; 10th and Constitution Avenue, N.W., Washington, D.C. 20530.

Categories of individuals covered by the system: Employee/participants in the DOJ Occupational Health Physical Fitness Program.

Categories of records in the system: A separate file is established for each Program participant. Data contained in the file consists of a Medical History Questionnaire, Physician Consent Form, Participant Waiver of Liability Form, Physical Fitness Profile, electrocardiographic tracings, Anthropometric Measurement Record, Exercise Prescription, Conditioning Record, attitudinal questionnaries, any positive test results and related correspondence.

Authority for maintenance of the system: The files are maintained pursuant to 5 U.S.C. 7901.

Routine uses of records maintained in the system, including categories of users and the purposes of such uses: Data contained in each file will be used to evaluate the physical condition of each participant and serve as a basis for preparation of the exercise prescription. Changes in physiological and attitudinal data taken at several points throughout the period of participation will be examined relative to program effect. Data will be taken from each file and anonymously aggregated in order to examine group norms. Use of this data is limited to the Occupational Health Physical Fitness Program staff and its contractors. Research findings may occasionally be published in professional journals but only in summary form. Positive examination results will be referred to the participant's physician upon the written request of the participant.

Release of information to the news media: Information permitted to be released to the news media and the public pursuant to 28 C.F.R. 50.2 may be made available from systems of records maintained by the Department of Justice unless it is determined that release of the specific information in the context of a particular case would constitute an unwarranted invasion of personal privacy.

Release of information to Members of Congress: Information contained in systems of records maintained by the Department of Justice, not otherwise required to be released pursuant to 5 U.S.C. 552, may be made available to a Member of Congress or staff acting upon the Member's behalf when the Member or staff requests the information on behalf of and at the request of the individual who is the subject of the record.

Routine uses of records maintained in the system, including categories of users and the purposes of such uses: Release of information to the National Archives and Records Service: A record from a system of records may be disclosed as a routine use to the National Archives and Records Service (NARS) in records management inspections conducted under the authority of 44 U.S.C. 2904 and 2906.

Policies and practices for storing, retrieving, accessing, retaining, and disposing of records in the system:

Storage: Information maintained in the system is manually stored in individual file folders. Summary data will be maintained in the computer data banks of the Department of Justice and the contractor, the University of Maryland.

Retrievability: File folders are maintained alphabetically by participant name. A 4-digit sequentially assigned number is used to imput computerized data which can subsequently be sorted against any other items pertaining to the participant.

Safeguards: File folders are maintained in locked file cabinets. Access to identifiable information is limited to those Department of Justice employees and contract employees whose official duties require such access.

Retention and disposal: Records identified to the participant are retained for as long as the participant is associated with the Program and for three years thereafter. Upon completion of the three-year holding period, the file is given to the participant, or destroyed, as determined by the participant.

System manager(s) and address: *Director, Personnel and Training Staff Justice Management Division* United States Department of Justice, 10th and Constitution Avenue, N.W., Washington, D.C. 20530.

Notification procedure: Same as the System Manager.

Record access procedures: Same as the System Manager.

Contesting record procedures: Same as the System Manager.

Record source categories: Information is supplied by the individual to whom the record pertains, and as a result of fitness evaluations conducted within the Program.

Systems exempted from certain provisions of the act: None.

JUSTICE/JMD-019

System name: Freedom of Information/Privacy Act Records.

System location: U.S. Department of Justice, *Justice Management Division,* 10th & Constitution Avenue, N.W., Washington, D.C. 20530.

Categories of individuals covered by the system: Persons who request disclosure of records pursuant to the Freedom of Information Act; persons who pursuant to the Privacy Act request access to or correction of records pertaining to themselves contained in systems of records maintained by the *Justice Management Division,* and, where applicable, persons about whom records have been requested or about whom information is contained in requested records.

Categories of records in the system: The system contains copies of all correspondence and internal memoranda related to Freedom of Information Act and Privacy Act requests or responses associated with the *Justice Management Division,* and related records necessary to the processing of such requests.

Authority for maintenance of the system: This system is established and maintained pursuant to 44 U.S.C. 3101 and is maintained to implement the provisions of 5 U.S.C. 552 and 552a and the provisions of 28 C.F.R. 16.1 et. seq. and 28 C.F.R. 16.40 et. seq.

Routine uses of records maintained in the system, including categories of users and the purposes of such uses: A record maintained in this system may be disseminated as a routine use of such record as follows: (1) a record may be disseminated to a Federal agency which furnished the record for the purpose of permitting a decision as to access or correction to be made by that agency, or for the purpose of consulting with that agency as to the propriety of access or correction; (2) a record may be disseminated to any appropriate federal, state, local, or foreign agency for the purpose of verifying the accuracy of information submitted by an individual who has requested amendment or correction of records contained in a system of records maintained by the *Justice Management Division;* (3) records maintained on behalf of the U.S. Civil Service Commission may be disseminated to the U.S. Civil Service Commission on request, as the custodian of these records.

Release of information to the news media: Information permitted to be released to the news media and the public pursuant to 28 C.F.R. 50.2 may be made available from systems of records maintained by the Department of Justice unless it is determined that release of the specific information in the context of a particular case would constitute an unwarranted invasion of personal privacy.

Release of information to Members of Congress: Information contained in systems of records maintained by the Department of Justice, not otherwise required to be released pursuant to 5 U.S.C. 552, may be made available to a Member of Congress or staff acting upon the Member's behalf when the Member or staff requests the information on behalf of and at the request of the individual who is the subject of the record.

Release of information to the National Archives and Records Service: A record from a system of records may be disclosed as a routine use to the National Archives and Records Service (NARS) in records management inspections conducted under the authority of 44 U.S.C. 2904 and 2906.

Policies and practices for storing, retrieving, accessing, retaining, and disposing of records in the system:

Storage: A record contained in this system is stored manually in alphabetical order in file cabinets.

Retrievability: A record is retrieved by the name of the individual or person making a request for access or correction of records.

Safeguards: Access to physical records is limited to personnel of the U.S. Department of Justice who have a need for the record in the performance of their duties under the Freedom of Information or Privacy Acts. The records are safeguarded and protected in accordance with applicable Departmental and Civil Service Commission regulations.

Retention and disposal: A disposal schedule has not been established for these records.

System manager(s) and address: Assistant Attorney General *Justice Management Division:* U.S. Department of Justice; 10th and Constitution Avenue, N.W.; Washington, D.C. 20530.

Notification procedure: Same as the System Manager.

Record access procedures: A request for access to a record contained in this system shall be made in writing with the envelope and the letter clearly marked (Freedom of Information) or 'Privacy Access Request'. Include in the request the name of the individual involved, his birth date and place, or any other identifying number or information which may be of assistance in locating the record. The requester will also provide a return address for transmitting the

information. Access requests will be directed to the system manager listed above.

Contesting record procedures: Individuals desiring to contest or amend information maintained in the system should direct their request to the system manager listed above, stating clearly and concisely what information is being contested, the reasons for contesting it, and the proposed amendment to the information sought.

Record source categories: The sources of information contained in this system are the individuals and persons making requests, the systems of records searched in the process of responding to requests, and other agencies referring requests for access to or correction of records originating in the *Justice Management Division.*

Systems exempted from certain provisions of the act: None.

Law Enforcement Assistance Administration (LEAA)

LEAA systems of records are reprinted below to reflect amendments stated as follows:

The Financial Management System (JUSTICE/LEAA-005) is reprinted to establish a new routine use. The new routine use provides that information from the Financial Management System may be disclosed to commercial credit bureaus for address location assistance.

The Civil Rights Investigative System JUSTICE/LEAA-008) is reprinted to correct typographical/printing errors. Notice of exemption of the system from the access provisions of the Privacy Act was published in the FEDERAL REGISTER on August 17, 1975. However, by error, the exemption was not shown in subsequent annual publications. The system reprinted below shows this system of records as being exempt from the access provisions of the Privacy Act, 5 U.S.C. 552a(d).

The Technical Assistance Resources Files (JUSTICE/LEAA-010) is reprinted to reflect a change in the system manager of this records system.

The Public Safety Officers' Benefits System (JUSTICE/LEAA-012) is reprinted to establish a new routine use as well as to deleter one. The new routine use will allow disclosure of information to researchers to assist them in researching the cause and prevention of public safety officer line of duty deaths. Deleted is a routine use which permitted disclosure to educaitonal institutions to verify eligibility status of beneficiaries who were students of the institution.

JUSTICE/LEAA-005

System name: Financial Management System

System location: Law Enforcement Assistance Administration; 633 Indiana Avenue, N.W.; Washington, D.C. 20531.

Categories of individuals covered by the system: Recipients of LEAA funds; Employees.

Categories of records in the system: Employee Travel files; time and attendance files; Government Transportation Requests; Paid Vendor Document File.

Authority for maintenance of the system: 5 U.S.C. 301.

Routine uses of records maintained in the system, including categories of users and the purposes of such uses: *Commercial credit bureaus for address location assistance.*

Release of information to the news media: Information permitted to be released to the news media and the public pursuant to 28 C.F.R. 50.2 may be made available from systems of records maintained by the Department of Justice unless it is determined that release of the specific information in the context of a particular case would constitute an unwarranted invasion of personal privacy.

Release of information to Members of Congress. Information contained in systems of records maintained by the Department of Justice, not otherwise required to be released pursuant to 5 U.S.C. 552, may be made available to a Member of Congress or staff acting upon the Member's behalf when the Member or staff requests the information on behalf of and at the request of the individual who is the subject of the record.

Release of information to the National Archives and Records Service: A record from a system of records may be disclosed as a routine use to the National Archives and Records Service (NARS) in records management inspections conducted under the authority of 44 U.S.C. 2904 and 2906.

Policies and practices for storing, retrieving, accessing, retaining, and disposing of records in the system:

Storage: Computerized discs, file folders.

Retrievability: Name, social security numbers, digital identifiers assigned by accounting office.

Safeguards: Manual information in system is safeguarded in locked file cabinets. Computerized passwork key is needed to access computerized information. Direct access only by comptroller personnel.

Retention and disposal: Employee travel files, time and attendance files and Government transportation files are closed at end of fiscal year, held three years thereafter; the records are then retired to Federal Records Center. Federal Records Center destroys in accordance with instructions of GAO.

System manager(s) and address: Comptroller; Law Enforcement Assistance Administration; 633 Indiana Avenue, N.W.; Washington, D.C. 20531.

Notification procedure: Same as the above.

Record access procedures: A request for access to a record from this system shall be made in writing with the envelope and letter clearly marked 'Privacy Access Request.' Access requests will be directed to the System Manager listed above.

Contesting record procedures: Individuals desiring to contest or amend information maintained in the system should direct their request to the System Manager listed above, stating clearly and concisely what information is being contested, the reasons for contesting it, and the proposed amendment to the information sought.

Record source categories: Sources of information contained in the system are the individuals to whom the information pertains.

Systems exempted from certain provisions of the act: None

JUSTICE/LEAA-008

System name: Civil Rights Investigative System

System location: Law Enforcement Assistance Administration; 633 Indiana Avenue NW.; Washington, D.C. 20531.

Categories of individuals covered by the system: Complaints of discrimination by individuals affected by the agency program for which the agency has compliance responsibility, grantees, subgrantees, contractors, subcontractors, employees, and applicants.

Categories of records in the system: Civil Rights Complaint Control Logs; Civil Rights Litigation Reference Files.

Authority for maintenance of the system: 42 U.S.C. 3766(c); E.O. 11246 (3 C.F.R. 173) as amended by E.O. 11375.

Routine uses of records maintained in the system, including categories of users and the purposes of such uses: Investigation of complaints and to obtain compliance with Civil Rights laws. Users of the data are State Planning Agencies, State Governors and Attorneys General, Criminal Justice Agencies, Office of Federal Contract Compliance, Equal Employment Opportunity Commission, Office of Federal Revenue Sharing, and a United States Commission on Civil Rights; Department of Health, Education, and Welfare; States Civil Rights Offices; and Law Enforcement Assistance Administration researchers for purposes of evaluation technical assistance and training.

Release of information to the news media: Information permitted to be released to the news media and the public pursuant to 28 C.F.R. 50.2 may be made available from systems of records maintained by the Department of Justice unless it is determined that release of the specific information in the context of a particular case would constitute an unwarranted invasion of personal privacy.

Release of information to Members of Congress. Information contained in systems of records maintained by the Department of Justice, not otherwise required to be released pursuant to 5 U.S.C. 552, may be made available to a Member of Congress or staff acting upon the Member's behalf when the Member or staff requests the information on behalf of and at the request of the individual who is the subject of the record.

Release of information to the National Archives and Records Service: A record from a system of records may be disclosed as a routine use to the National Archives and Records Service (NARS) in records management inspections conducted under the authority of 44 U.S.C. 2904 and 2906.

Policies and practices for storing, retrieving, accessing, retaining, and disposing of records in the system:

Storage: Information in the system is stored in file folders and on index cards.

Retrievability: Information is retrieved by name of respondent and complainants.

Safeguards: Information is kept in locked file cabinets and combination safe. Access is limited to investigative personnel.

Retention and disposal: Complaint control logs are destroyed upon completion of action on the inquiry or complaint. Complaint case files thereafter are not retrievable by name, number, or other information identifiable to the individual. Other investigative information is destroyed four years after the investigation is completed.

System manager(s) and address: Office of Civil Rights Compliance; Law Enforcement Assistance Administration; 633 Indiana Avenue NW.; Washington, D.C. 20531.

Notification procedure: Same as the above.

Record access procedures: A request for access to a record containing civil rights investigatory material shall be made in writing with the envelope and letter clearly marked "Privacy Access Request" to the Civil Rights System Manager listed above.

Contesting record procedures: Individuals desiring to contest or amend information maintained in the system should direct their request to the System Manager listed above, stating clearly and concisely what information is being contested, the reasons for contesting it, and the proposed amendment to the information sought.

Record source categories: The information contained in this system was received from individual complainants, witnesses, grant files, respondents, official State and Federal records.

Systems exempted from certain provisions of the act: *The Attorney General has exempted this system from subsection (d) of the Privacy Act pursuant to 5 U.S.C. 552a(K)(2). Rules have been promulgated in accordance with the requirements of 5 U.S.C. 553(b), (c) and (e) and have been published in the* FEDERAL REGISTER.

JUSTICE/LEAA-010

System name: Technical Assistance Resource Files

System location: Law Enforcement Assistance Administration; 633 Indiana Avenue, N.W.; Washington, D.C. 20531.

Categories of individuals covered by the system: Consultants with expertise in criminal justice systems.

Categories of records in the system: The system consists of resumes and other documents related to technical assistance requests.

Authority for maintenance of the system: The system is maintained under authority of 42 U.S.C. 3763(c).

Routine uses of records maintained in the system, including categories of users and the purposes of such uses: The system is used to determine the qualifications and availability of individuals for technical assistance assignments. Users are State planning agencies and the Law Enforcement Assistance Administration.

Release of information to the news media: Information permitted to be released to the news media and the public pursuant to 28 C.F.R. 50.2 may be made available from systems of records maintained by the Department of Justice unless it is determined that release of the specific information in the context of a particular case would constitute an unwarranted invasion of personal privacy.

Release of information to Members of Congress. Information contained in systems of records maintained by the Department of Justice, not otherwise required to be released pursuant to 5 U.S.C. 552, may be made available to a Member of Congress or staff acting upon the Member's behalf when the Member or staff requests the information on behalf of and at the request of the individual who is the subject of the record.

Release of information to the National Archives and Records Service: A record from a system of records may be disclosed as a routine use to the National Archives and Records Service (NARS) in records management inspections conducted under the authority of 44 U.S.C. 2904 and 2906.

Policies and practices for storing, retrieving, accessing, retaining, and disposing of records in the system:

Storage: Information contained in the system is on hard copy and stored in file cabinets.

Retrievability: Information is manually retrieved by the name of the individual.

Safeguards: Records are stored in file cabinets. Admittance to the building in which they are stored requires a building pass or an individuals signature at the main entrance to the building.

Retention and disposal: Records are placed in an inactive file at the end of the fiscal year in which final use was made. They are held two years in the inactive file; then transferred to the Federal Records Center. Records are destroyed after six years.

System manager(s) and address: Technical Assistance Coordinator; *Division Director of Program area in which records are sought: Adjudication, Enforcement, Corrections, and Special Programs in the Office of Criminal Justice Programs; Juvenile Justice in the Office of Juvenile Justice and Delinquency Prevention; Systems Development in the National Criminal Justice Information and Statistics Service,* Law Enforcement Assistance Administration; 633 Indiana Avenue, N.W.; Washington, D.C. 20531.

Notification procedure: Address inquiries to the system manager(s) at the above address.

Record access procedures: A request for access to a record contained in this system shall be made in writing with the envelope and letter clearly marked 'PRIVACY ACCESS REQUEST.' Include in the request the name and grant/contract number for the record desired. Access requests will be directed to the system manager(s) listed above.

Contesting record procedures: Individuals desiring to contest or amend information maintained in the system should direct their requests to the system manager(s) listed above, stating clearly and concisely what information is being contested, the reasons for contesting it, and the proposed amendment to the information sought.

Record source categories: Sources of information contained in this system are those individuals to whom the information pertains.

Systems exempted from certain provisions of the act: None.

JUSTICE/LEAA-012

System name: Public Safety Officers' Benefits System

System location: Law Enforcement Assistance Administration, 633 Indiana Avenue, N.W., Washington, D.C. 20531.

Categories of individuals covered by the system: Public Safety Officers who died while in the line of duty and their surviving beneficiaries.

Categories of records in the system: This system contains an index by claimant and deceased Public Safety Officers; case files of eligibility documentation; and benefit payment records.

Authority for maintenance of the system: Authority for maintaining this system exists under 42 U.S.C. 3701, et seq., Pub. L. No. 94-430 (Sept. 29, 1976) and 44 U.S.C. 3101.

Routine uses of records maintained in the system, including categories of users and the purposes of such uses: (1) State and local agencies to verify and certify eligibility for benefits; (2) *researchers for the purpose of researching the cause and prevention of public safety officer line of duty deaths;* (3) appropriate Federal agencies to coordinate benefits paid under similar programs; and (4) members of Congress or staff acting upon the member's behalf when the member or staff requests the information on behalf of and at the request of the individual who is a party in interest.

Release of information to the National Archives and Records Service: A record from a system of records may be disclosed as a routine use to the National Archives and Records Service (NARS) in records management inspections conducted under the authority of 44 U.S.C. 2904 and 2906.

Policies and practices for storing, retrieving, accessing, retaining, and disposing of records in the system:

Storage: Information in this system is maintained on a master index, in folders and on computer magnetic tape.

Retrievability: Information is retrievable by name of claimant, name of deceased Public Safety Officer, and case file number.

Safeguards: Computerized information is safeguarded and protected by computer password key and limited access. Noncomputerized data is safeguarded in locked cabinets. All files are maintained in a guarded building.

Retention and disposal: Files are retained, retired to Federal records centers and disposed of in accordance with General Services Administration disposal schedules.

System manager(s) and address: PSOB Program Officer, 633 Indiana Avenue, N.W., Washington, D.C. 20531.

Notification procedure: Same as above.

Record access procedures: Request for access to a record from this system should be made in writing with the envelope and the letter clearly marked 'Privacy Access Request.' Access requests will be directed to the System Manager listed above.

Contesting record procedures: Individuals desiring to contest or amend information maintained in the system should direct their request to the System Manager listed above and state clearly and concisely what information is being contested, the reason for contesting it and the proposed amendment to the information sought.

Record source categories: Public agencies including employing agency, beneficiaries, educational institutions, physicians, hospitals, official state and Federal documents.

Systems exempted from certain provisions of the act: None.

Office of the Pardon Attorney (OPA)

While retained in the Office of the Pardon Attorney, U.S. Department of Justice, Executive Clemency Files are files of the President of the United States which are compiled and maintained to provide for the exercise of his constitutional responsibilities pursuant to Article II, Section 2, and are not subject to the provisions of the Privacy Act of 1974. However, in compliance with the spirit of the Act, the Office of the Pardon Attorney (1) hereby notifies the public that guidelines approved by the President for handling requests for execu-

tive clemency and disclosure of materials submitted or furnished in connection with Executive clemency are published in 28 CFR Part 1 and (2) hereby publishes an amended system notice.

The Executive Clemency Files system (JUSTICE/OPA-001) is reprinted below to correct the identifying number of the pardon application and to correct a misspelled word.

JUSTICE/OPA-001

System name: Executive Clemency Files

System location: Office of the Pardon Attorney; U.S. Department of Justice; Washington, D.C. 20530.

Categories of individuals covered by the system: Applicants for Executive clemency.

Categories of records in the system: The system contains the individual petitions for Executive clemency (OPA-6 or *13*) submitted by the applicants and accompanying oath and character affidavits (DOJ-1973-06), investigatory material, evaluative reports, inter-agency and intra-agency correspondence and memoranda relating to individual petitions for clemency. The system includes Presidential Clemency Board files transferred to the Office of the Pardon Attorney upon termination of the Board's existence on September 15, 1975.

Authority for maintenance of the system: The system is established and maintained in accordance with the United States Constitution, Article II, section 2, Executive Order of the President dated June 16, 1893, Order No. 288-62, 27 FR 11002, November 10, 1962, as codified in 28 CFR 1.1 et seq. and E.O. 11878 dated September 10, 1975.

Routine uses of records maintained in the system, including categories of users and the purposes of such uses: Executive clemency files are used to (a) enable the Attorney General to investigate each petition for Executive clemency, to review each petition and information developed by his investigation thereof and to advise the President whether, in his judgment, the request for clemency is of sufficient merit to warrant favorable action by the President; (b) prepare notices to the public of the name of each grantee of clemency, date of Presidential action, nature of clemency granted, nature of grantee's offense, date and place of sentencing, description of sentence imposed, and names of character affiants and interested members of Congress; and disclose similar information to that specified above with respect to denials of general public interest if the disclosure does not constitute an unwarranted invasion of privacy; (c) prepare bound and indexed volumes containing photocopies of the official *warrant* of clemency granted each recipient of clemency as a public and official record of Presidential action; (d) upon request of the President and members of his staff, to make available to them individual clemency files; (e) upon specific request, to advise the requestor whether a named person has applied for, been granted or denied clemency, the date thereof and the nature of the clemency granted or denied; (f) upon specific request, to make closed files available for historical research purposes when in the public interest and in conformity with Department of Justice policy; and (g) upon request or otherwise, to make any information which indicates a violation or apparent violation of law, whether civil, criminal or regulatory in nature, available to the appropriate agency, whether Federal, state, local or foreign.

Release of information to the news media: Information permitted to be released to the news media and the public pursuant to 28 CFR 50.2 may be made available from systems of records maintained by the Department of Justice unless it is determined that release of the specific information in the context of a particular case would constitute an unwarranted invasion of personal privacy.

Release of information to Members of Congress: Information contained in systems of records maintained by the Department of Justice, not otherwise required to be released pursuant to 5 U.S.C. 552, may be made available to a Member of Congress or staff acting upon the Member's behalf when the Member or staff requests the information on behalf of and at the request of the individual who is the subject of the record.

Release of information to the National Archives and Records Service: A record from a system of records may be disclosed as a routine use to the National Archives and Records Service (NARS) in records management inspections conducted under the authority of 44 U.S.C. 2904 and 2906.

Policies and practices for storing, retrieving, accessing, retaining, and disposing of records in the system:

Storage: Information maintained in the system is stored in the Office of the Pardon Attorney and in Archives.

Retrievability: Information is retrieved by reference to the file number assigned to the name of each applicant for clemency.

Safeguards: Information contained in the system is safeguarded and protected in accordance with Department of Justice Rules Governing Petitions for Executive Clemency, specifically, 28 CFR 1.6. Executive clemency files are maintained in the Office of the Pardon Attorney and are not commingled with Department of Justice records.

Retention and disposal: Records are stored in the Office of the Pardon Attorney and closed cases are transferred to the Federal Archives Records Center when five years old. Except for the "letter of advice" furnished to the President in connection with clemency applications and Presidential responses and cases designated by the Pardon Attorney as having significant public interest, records are destroyed after 25 years.

System manager(s) and address: Pardon Attorney; Office of the Pardon Attorney; Department of Justice; Washington, D.C. 20530.

Notification procedure: Address inquiries to the Pardon Attorney; Department of Justice; Washington, D.C. 20530.

Record access procedures: While the Attorney General has exempted Executive Clemency files from the access provisions of the Privacy Act, requests for discretionary releases of records contained in the system shall be made in writing with the envelope and letter clearly marked "Privacy Access Request." Include in the request the general subject matter of the document and the name of the clemency applicant in whose file it is contained. The requestor will also provide a return address for transmitting the information. Access requests will be directed to the System Manager listed above.

Contesting record procedures: While the Attorney General has exempted Executive Clemency files from the correction (contest and amendment) provisions of the Privacy Act, requests for the discretionary correction (contest and amendment) of records contained in this system should be directed to the System Manager listed above, stating clearly and concisely what information is being contested, the reasons for contesting it and the proposed amendment to the information sought.

Record source categories: Sources of information contained in this system are the individual applicants for clemency, Federal Bureau of Investigation or other official investigatory reports, Bureau of Prisons records, armed forces reports, probation or parole reports and reports from individual or non-Federal organizations, both solicited and unsolicited.

Systems exempted from certain provisions of the act: The Attorney General has exempted this system from subsection (d) of the Privacy Act pursuant to 5 U.S.C. 552a(j)(2). Rules have been promulgated in accordance with the requirements of 5 U.S.C. 553 (b), (c) and (e) and have been published in the Federal Register.

U.S. Parole Commission (PRC)

The U.S. Parole Commission system of records identified as PRC-001 through PRC-007 are reprinted below. They reflect minor changes and/or clarifications. In addition, systems of records identified as PRC-006 and PRC-007 also reflect changes to the "Storage" and "Retrievability" categories. However, these changes are such that they do not create either greater or easier access. Therefore, these changes do not meet the criteria which require a report to the Office of Management and Budget and the Congress.

JUSTICE/PRC-001

System name: Docket, Scheduling and Control

System location: Records are maintained at each of the Regional Offices for inmates incarcerated in and persons under supervision in each region, except for the National Appeals Board docket maintained in Washington. All requests for records should be made to the appropriate regional office or Headquarters at the following addresses: United States Parole Commission, Scott Plaza II, Industrial Highway, 6th Floor, Philadelphia, Pa. 19113; United States Parole Commission, *715 McDonough Blvd S.E., Atlanta*, Ga. 30315; United States Parole Commission, 320 First Street, Washington, D.C. 20537, ATTN: National Appeals Board, United States Parole Commission, KCI Bank Building, 8800 Northwestern 112th Street, Kansas City, Mo. 64153. United States Parole Commission, 3883 Turtle Creek Boulevard, Suite I, Dallas, Tex. 75219. United States Parole Commission, 330 Primrose Drive, 5th Floor Burlingame, Calif. 94010.

Categories of individuals covered by the system: Current and former inmates under the custody of the Attorney General who have become eligible for parole. Former inmates includes those presently under supervision as parolees or mandatory releases and those against who a revocation *warrant* has been issued.

Categories of records in the system: (a) Docket sheets—Each region and the National Appeals Board in Washington maintain a cumulative series of docket sheets in time sequence showing Commission action. Principal data elements are name and register number of inmate, offense, sentence, and previous and present Action. The appeal docket includes the date and type of appeal in addition to

much of the above data. These provide a continual running record of the basic data elements per inmate and former inmate. (b) Hearing schedules—*Shortly after inmates are incarcerated,* their names appear on an eligibility list prepared by the Bureau of Prisions, for initial parole hearings. Inmates denied *immediate* parole are "continued" by the Commission to future dates for review hearings or records reviews. Other types of hearings and reviews are provided for in the Code of Federal Regulations as part of parole, rescission or revocation procedures. All of the different types of hearings and reviews are placed on schedules for examiners to process when they visit the various institutions or hold 'local' hearings. The data elements are similar to those on the docket but indicate the number and type of hearing or review to be held instead of the result.

Authority for maintenance of the system: 18 U.S.C. 4201-4218, 5005-5041, 28 CFR Part O, Subpart V, and 28 CFR Part 2.

Routine uses of records maintained in the system, including categories of users and the purposes of such uses: (a) The dockets provide the basis of answering basic inquiries, mostly from within the Parole Commission, as to when a hearing came up for an individual and what action was taken. The schedules indicate to examiners and prison staff the specific hearings and reviews to be prepared for and held.

(b) In the event that material in this system indicates a violation or potential violation of law, whether civil, criminal or regulatory in nature, and whether arising by general statute, or by regulation, rule or order issued pursuant thereto, the relevant records may be referred to the appropriate agency, whether Federal, State, local or foreign, charged with responsibility of investigating or prosecuting such violation or charged with enforcing or implementing the statute, or rule, regulation or order issued pursuant thereto.

(c) A record from this system of records may be disclosed to a Federal, State or local agency maintaining civil, criminal or other relevant information if necessary to obtain information relevant to an agency decision concerning parole matters.

(d) A record from this system may be disclosed to a Federal agency, in response to its request, in connection with the hiring or retention of an employee, the issuance of a security clearance, the reporting of an investigation of an employee, the letting of a contract, or the issuance of a license, grant or other benefit by the requesting agency, to the extent that the information is relevant and necessary to the requesting agency's decision on the matter.

(e) Internal users—Employees of the Department of Justice who have a need to know the information in the performance of their duties.

(f) External users—As noted above, on occasion employees of Federal, State and local enforcement, correctional, prosecutive, or other agencies, and courts may have access to this information.

Release of information to the news media: Information permitted to be released to the news media and the public pursuant to 28 CFR 50.2 may be made available from systems of records maintained by the U.S. Parole Commission unless it is determined that release of the specific information in the context of a particular case would constitute an unwarranted invasion of personal privacy.

Release of information to Members of Congress. Information contained in systems of records maintained by the U.S. Parole Commission, not otherwise required to be released pursuant to 5 U.S.C. 552, may be made available to a member of Congress or staff acting upon the Member's behalf when the Member or staff requests the information on behalf of and in response to a communications from the individual who is the subject of the record.

Release of information to the National Archives and Records Service: A record from a system of records may be disclosed as a routine use to the National Archives and Records Service (NARS) in records management inspections conducted under the authority of 44 U.S.C. 2904 and 2906.

Policies and practices for storing, retrieving, accessing, retaining, and disposing of records in the system:

Storage: Information stored in the system is on sheets of paper, one item per line, stored in folders or binders. An experimental program to store such data on tape, disk, or microfiche using ADP technology, is in the beginning stages.

Retrievability: Name, register number, date, institution, Commission action.

Safeguards: Copies of dockets and schedules are not disseminated outside of Commission offices and Bureau of Prisons installations. They are available only to Commission and bureau employees on a "need to know" basis. Information therefrom may be given outside the Department as indicated in the "Routine Uses." If so, a letter will be written covering the item disclosed, date, and identity of the recipient. If information must be given over the phone due to urgency, the caller will be identified beforehand and details of the call recorded.

Retention and disposal: Records in this system are kept for five (5) years after the effective date of the schedule or date of the last item recorded on the docket. They are then shredded.

System manager(s) and address: Herman Levy, Attorney-Management Analyst, United States Parole Commission, 320 First Street NW., Room *846*; Washington, D.C. 20537.

Notification procedure: Address inquiries to Regional *Commissioner* at appropriate location. For general inquiries, address system manager. The Attorney General has exempted this system from compliance with the provisions of subsection (d), under the provisions of subsection (j).

Record source categories: 1) Bureau of Prisons files; 2) Parole Commission and Bureau of Prison's employees; 3) Court Records, 4) Parole Commission inmate files.

Systems exempted from certain provisions of the act: The Attorney General has exempted this system from subsections (c) (3) and (4), (d), (e) (2) and (3), (e)(4) (G) and (H), (e)(8), (f) and (g) of the Privacy Act pursuant to 5 U.S.C. 552a(j)(2). Rules have been promulgated in accordance with the requirements of 5 U.S.C. 553 (b), (c) and (e) and have been published in the Federal Register.

JUSTICE/PRC-002

System name: Freedom of Information Act Record System

System location: Records may be retained at any of the Regional Offices as indicated in the Inmate and Supervision Files System and the Headquarter's Office. All requests for records may be made to the Central Office, United States Parole Commission, 320 First Street NW., Washington, D.C. 20537, ATTN: Executive Assistant to Chairman, or to the appropriate Regional Office.

Categories of individuals covered by the system: Current and former inmates under the custody of the Attorney General, including former inmates on supervision.

Categories of records in the system: (1) Administrative requests and responses to requests for information and records under 5 U.S.C. 552, and appeals from denials of data; (2) Final orders of Commission following all parole, rescission, and revocation hearings, record reviews, and appeals are maintained in the Freedom of Information Act reading room at Commission headquarters with names removed to protect individual privacy of inmates and persons on supervision. Final decisions in labor and pension cases are maintained in said reading room.

Authority for maintenance of the system: 5 U.S.C 552.

Routine uses of records maintained in the system, including categories of users and the purposes of such uses: The system is used: (a) to maintain records concerning the processing and determination of requests for information made pursuant to the Freedom of Information Act 5 U.S.C. 552; and make final orders available in a reading room pursuant to 5 U.S.C. 552: (b) to provide documentation of receipt and processing requests for information made pursuant to the Freedom of Information Act if needed for processing contested denials of release of data; (c) to furnish information to employees of the Department of Justice who have a need for information from the system in performance of their duties; (d) to maintain a count of requests and method of compliance as required by Freedom of Information Act.

Release of information to the news media: Information permitted to be released to the news media and the public pursuant to 28 CFR 50.2 may be made available from systems of records maintained by the U.S. Parole Commission unless it is determined that release of the specific information in the context of a particular case would constitute an unwarranted invasion of personal privacy.

Release of information to Members of Congress. Information contained in systems of records maintained by the U.S. Parole Commission not otherwise required to be released pursuant to 5 U.S.C. 552, may be made available to a Member of Congress or staff acting upon the Member's behalf when the Member or staff requests the information on behalf of and in response to a communication from the individual who is the subject of the record.

Release of information to the National Archives and Records Service: A record from a system of records may be disclosed as a routine use to the National Archives and Records Service (NARS) in records management inspections conducted under the authority of 44 U.S.C 2904 and 2906.

Policies and practices for storing, retrieving, accessing, retaining, and disposing of records in the system:

Storage: Information maintained in the system is stored on documents.

Retrievability: Documents are indexed by name and/or register number. Final orders in the reading room are indexed by *register number, type, source, and result.*

Safeguards: Information is stored in file cabinets in rooms supervised by day and locked at night and are made available to Commission personnel and other Department of Justice employees on a "need to know" basis. Each requestor may see his own file. The public may use the reading room.

Retention and disposal: Records in this system are retained for a period of ten (10) years after expiration of sentence, then destroyed by shredding.

System manager(s) and address: General Counsel, United States Parole Commission, 320 First Street NW., Washington, D.C. 20537.

Notification procedure: Same as the above.

Record access procedures: Same as the above.

Contesting record procedures: Same as the above.

Record source categories: (1) Inmates and persons on supervision; (2) Department of Justice employees.

Systems exempted from certain provisions of the act: None.

JUSTICE/PRC-003

System name: Inmate and Supervision Files

System location: Records are maintained at each of the Commission's Regional Offices for inmates incarcerated in and persons under supervision in each region. Records are housed temporarily at the Commission's Headquarters Office located at 320 First Street, Washington, D.C. 20537 when used by the National Appeals Board or other Headquarter's personnel. Prior to the first parole hearing, the inmate's file is maintained at the institution at which he is incarcerated. All requests for records should be made to the appropriate regional office at the following addresses: U.S. Parole Commission, Scott Plaza II, Industrial Highway, Sixth Floor, Philadelphia, Pa. 19113. U.S. Parole Commission, *715 McDonough Blvd. S.E.,* Atlanta, Ga. 303*15*. U.S. Parole Commission, KCI Bank Building, 8800 112th Street NW., Kansas City, Mo. 64153. U.S. Parole Commission, 3883 Turtle Creek Boulevard, Suite I, Dallas, Tex. 75219. U.S. Parole Commission, 330 Primrose Drive, Fifth Floor, Burlingame, Calif. 94010.

Categories of individuals covered by the system: Current and former inmates under the custody of the Attorney General. Former inmates include those presently under supervision as parolees or mandatory releasees.

Categories of records in the system: 1. Computation of sentence and supportive documentation.

2. Correspondence concerning pending charges, and wanted status, including warrants.

3. Requests from other Federal and non-Federal law enforcement agencies for notification prior to release.

4. Records of the allowance, forfeiture, withholding and restoration of good time.

5. Information concerning present offense, prior criminal background, sentence, and parole from the U.S. Attorneys, the Federal Courts, and Federal prosecuting agencies.

6. Identification Data.

7. Order of designation of institution of original commitment.

8. Records and reports of work and housing assignments.

9. Program selection, assignment and performance adjustment/progress reports.

10. Conduct records.

11. Social background.

12. Educational data.

13. Physical and mental health data.

14. Parole Commission applications, appeal documentation, orders actions, examiner's summaries, transcripts or tapes of hearings, guideline evaluation documents, parole or mandatory release certificates, statements of third parties for or against parole, special reports on youthful offenders and adults required by statute and related documents.

15. Correspondence regarding release planning, adjustment and violations.

16. Transfer orders.

17. Mail and visit records.

18. Personal property records.

19. Safety reports and rules.

20. Release processing forms and certificates.

21. Interview request forms from inmates.

22. General correspondence.

23. Copies of inmate court petitions and other court documents.

24. Reports of probation officers, Commission correspondence with former inmates and others, and Commission orders and memoranda dealing with supervision and conditions of parole or mandatory release.

25. If an alleged parole violation exists, correspondence requesting a revocation warrant, warrant application, warrant, instructions as to service, detainers and related documents.

Authority for maintenance of the system: 18 U.S.C. 4201-4218, 5005-5041, 28 CFR Part O, Subpart V, and 28 CFR Part 2.

Routine uses of records maintained in the system, including categories of users and the purposes of such uses: (a) The file is the "working tool" used by Parole Commission examiners to frame the questions at the inmates initial hearing. After that hearing, it is placed in the appropriate regional office where it provides the principal information source for decisions necessary during the pre-release stage (before parole), the review hearing or record review, and the post release stage (when supervision takes place). It is sent temporarily to Commission Headquarters when appeals come before the National Appeals Board or when needed by counsel and others on the Headquarters Staff. It is used by employees at all levels including Commission members to provide the information for decision making in every area of Commission responsibility. Files of released inmates are used to make statistical studies of subjects related to parole and revocation.

(b) The system is used to provide *an* information source to officers and employees of the Department of Justice who have a need for the information in the performance of their duties.

(c) The system is used *as a* source for disclosure of information *which is* solely of general public record, such as offense, sentence data, release date, etc. Names are not disclosed when information is so provided.

(d) The system is used to provide informational source for responding to inquiries from Federal inmates, their families or representatives, or Congressional inquiries.

(e) Internal Users—Employees of the Department of Justice who have a need to know information in the performance of their duties.

(f) External Users—U.S. Probation Officers, who supervise parolees and mandatory releasees and U.S. District Court judges when Commission action is attacked in litigation. Very rarely, to enforcement authorities outside of the Department of Justice.

(g) In the event that material in this system indicates a violation or potential violation of law, whether civil, criminal or regulatory in nature, and whether arising by general statute, or by regulation, rule or order issued pursuant thereto, the relevant records may be referred to the appropriate agency, whether Federal, State, local or foreign, charged with the responsibility of investigating or prosecuting such violation or charged with enforcing or implementing the statute, or rule, regulation or order, issued pursuant thereto.

(h) A record from the this system may be disclosed to a Federal, State or local agency maintaining civil, criminal or other relevant information if necessary to obtain information relevant to an agency decision relating to current or former inmates under supervision.

(i) A record from this system may be disclosed to a Federal agency, in response to its request, in connection with the hiring or retention of an employee, the issuance of a security clearance, the reporting of an investigation of an employee, the letting of a contract, or the issuance of a license, grant or other benefit by the requesting agency to the extent that the information is relevant and necessary to the requesting agency's decision on the matter.

(j) A record from this system may be disclosed to a person or to persons who may be exposed to harm through contact with a particular parolee or mandatory releasee if it is deemed by a Commissioner to be reasonably necessary to give notice that such danger exists.

Release of information to the news media: Information permitted to be released to the news media and the public pursuant to 28 CFR 50.2 may be made available from systems of records maintained by the U.S. Parole Commission unless it is determined that release of the specific information in the context of a particular case would constitute an unwarranted invasion of personal privacy.

Release of information to Members of Congress: Information contained in systems of records maintained by the U.S. Parole Commission, not otherwise required to be released pursuant to 5 USC 552, may be made available to a Member of Congress or staff acting upon the Member's behalf when the Member or staff requests the information on behalf of and in response to a communication from the individual who is the subject of the record.

Release of information to the National Archives and Records Service: A record from a system of records may be disclosed as a routine use to the National Archives and Records Service (NARS) in records management inspections conducted under the authority of 44 USC 2904 and 2906.

Policies and practices for storing, retrieving, accessing, retaining, and disposing of records in the system:

Storage: Information maintained in the system is stored on papers fastened into file jackets and a minimal amount is on cards stored in card file drawers. Active files and card indices are located in each region; inactive files are at the Washington Federal Records Center and the card index to inactive files is at Board Headquarters in Washington. An experimental program to store such data on tape, disk or microfiche using ADP technology is in the beginning stages.

Retrievability: All data is indexed by name and/or register number. When ADP technology is used in the future, such data may be available by FBI identification number, or other indices.

Safeguards: Within the Department of Justice, routine use is made available to employees only on a "need to know" basis. Files are stored in rooms which are supervised by day and locked at night. Data from files for recipients outside of the Parole Commission and Bureau of Prisons is conveyed by letter so that a record exists. When files are sent they are covered by a letter with a follow-up on return of the file. Such disclosure is infrequent, and is within the Federal enforcement-prosecution-judicial area only.

Retention and disposal: Records in this system are retained for a period of ten (10) years after expiration of sentence, then destroyed by electronic means or shredding.

System manager(s) and address: Herman Levy, Attorney-Management Analyst, United States Parole Commission, 320 First Street NW., Room *846*, Washington, D.C. 20537.

Notification procedure: Address inquiries to Regional *Commissioner* at appropriate location. For general inquiries, address System Manager. The Attorney General has exempted this system from compliance with the provisions of Subsection (d) under the provisions of Subsection (j).

Record source categories: 1. Individual inmate; 2. Federal law enforcement agencies and personnel; 3. State and Federal probation services; 4. Non-Federal law enforcement agencies; 5. Educational institutions; 6. Hospital or medical sources; 7. Relatives, friends and other interested individuals or groups in the community; 8. Former or future employers; 9. Evaluations, observations, reports, and findings of institution supervisors, counselors, board and committees, Parole Commission examiners, Parole Commission Members; 10 Federal Court records; 11. U.S. Bureau of Prisons personnel and records.

Systems exempted from certain provisions of the act: The Attorney General has exempted this system from subsections (c) (3) and (4), (d), (e) (2) and (3), (e)(4) (G) and (H), (e)(8), (f) and (g) of the Privacy Act pursuant to 5 U.S.C. 55a(j)(2). Rules have been promulgated in accordance with the requirements of 5 U.S.C. 553 (b), (c) and (e) and have been published in the Federal Register.

JUSTICE/PRC-004

System name: Labor and Pension Case, Legal File and General Correspondence System

System location: All Labor and Pension cases, *most* Legal file and some general correspondence material is located at: Commission Headquarters, 320 First Street NW., Washington, D.C. 20537. The balance of the general correspondence material is located at the Commission's Regional Offices, the addresses of which are specified in the Inmate and Supervision System. *Some legal files are maintained at the Northeast Regional Office.*

Categories of individuals covered by the system: All applicants for exemptions under 29 U.S.C. 504 and 29 U.S.C. 1111, all persons litigating with the U.S. Parole Commission, all persons corresponding with the Commission on subjects not amenable to being filed in an inmate or supervision file identified by an individual, and all Congressmen inquiring about constituents.

Categories of records in the system: The Commission processes applications of persons convicted of certain crimes for exemptions to allow their employment in the Labor field under 29 U.S.C. 504 of by Employee Benefit Plans under 29 U.S.C. 1111. The files contain memoranda, correspondence, and legal documents with information of a personal nature, i.e., family history, employment history, income and wealth, etc., and of a criminal history nature, i.e., record of arrests and convictions, and details as to the crime which barred employment. The final decision of the Commission in each case is a public document under the Freedom of Information Act. The Counsel's Office of the Parole Commission maintains work files for each inmate or person on supervision who is litigating with the Commission. These files contain personnel and criminal history type data regarding inmates, and internal communications among attorneys, *Commissioners* and others developing the Commission's legal position in these cases. Files of the Commission's correspondence with Congressmen who inquire about groups of constituents who have paroles or revocations pending or other subjects are maintained in the Chairman's Office and in the regions. Files of correspondence, notes, and memoranda concerning parole revocation *rescission* and related problems are also maintained in those locations. Some of this material duplicates material in the inmate files and contains personnel-criminal history type information about individuals.

Authority for maintenance of the system: These files are maintained pursuant to 18 U.S.C. 4201-4218, 5005-5041, 28 CFR Part O, Subpart V, 28 CFR Parts 2 and 4, 29 U.S.C. 504, 1111, and all statutory sections and procedural rules allowing inmates, persons under supervision, or others to litigate with the Parole Commission.

Routine uses of records maintained in the system, including categories of users and the purposes of such uses: Within the Parole Commission material in this system is used respectively by Counsel's Office staff and Commission Members in processing exemption applications. The legal file material is used by Counsel's Office staff in asserting the litigative position of the Commission. The general correspondence is used by the Commission personnel in responding to Congressmen, and by Commission Members and others in transacting the day-to-day business of the Commission. Final pension and labor case decisions are used by the Commission, the Justice, and Labor Departments, and the public to establish precedents in this field of litigation.

In the event that material in this system indicates a violation or potential violation of law, whether civil, criminal or regulatory in nature, and whether arising by general statute, or by regulation, rule or order issued pursuant thereto, the relevant records may be referred to the appropriate agency, whether Federal, State, local or foreign, charged with the responsibility of investigating or prosecuting such violation or charged with enforcing or implementing the statute, or rule, regulation or order issued pursuant thereto. A record from this system of records may be disclosed to a Federal, State or local agency maintaining civil, criminal or other relevant information if necessary to obtain information relevant to an agency decision relating to pension or labor matters. A record from this system may be disclosed to a Federal agency, in response to its request, in connection with the hiring or retention of an employee, the issuance of a security clearance, the reporting of an investigation of an employee, the letting of a contract, or the issuance of a license, grant or other benefit by the requesting agency, to the extent that the information is relevant and necessary to the requesting agency's decision on the matter.

Release of information to the news media. Information permitted to be released to the news media and the public pursuant to 28 CFR 50.2 may be made available from systems of records maintained by the U.S. Parole Commission unless it is determined that release of the specific information in the context of a particular case would constitute an unwarranted invasion of personal privacy.

Release of information to Members of Congress. Information contained in systems of records maintained by the U.S. Parole Commission, not otherwise required to be released pursuant to 5 U.S.C. 552, may be made available to a Member of Congress or staff acting upon the Member's behalf when the Member or staff requests the information on behalf of and in response to a communication from the individual who is the subject of the record.

Release of information to the National Archives and Records Service. A record from a system of records may be disclosed as a routine use to the National Archives and Records Service (NARS) in records management inspections conducted under the authority of 44 U.S.C. 2904 and 2906.

Policies and practices for storing, retrieving, accessing, retaining, and disposing of records in the system:

Storage: All data is on documents or other papers in bound files. Labor and pension case material is in Counsel's Office or the Chairman's Office at Headquarters, except for final decisions which are in the Freedom of Information Act reading room. Legal files are in Counsel's Office at Headquarters, *or in the Northeast Regional Attorney's office,* general correspondence is in the Chairman's Office, the office of his staff at Headquarters, and the offices of each regional *Commissioner.* Files are in file cabinets.

Retrievability: Labor, pension, and legal file material is indexed or filed by name of applicant or litigant, respectively. General correspondence is indexed or filed by subject, time sequence or individuals to whom the items refer.

Safeguards: Material is available only to Commission employees on a "need to know" basis. Storage locations are supervised by day and locked at night. Only disclosure made therefrom is to other agencies of the Department of Justice, the U.S. Probation Office, Federal enforcement agencies or the Congress. Disclosure to Congressmen in response to inquiries concerning constituents is subject to the exemptions of the Freedom of Information Act. The Commission Decisions in labor and pension cases are public information under the Freedom of Information Act.

Retention and disposal: Records are maintained for 10 years and are shredded or destroyed electronically thereafter.

System manager(s) and address: Herman Levy; Attorney/Management Analyst, United States Parole Commission, 320 First Street NW., Room *846*, Washington, D.C. 20537.

Record source categories: a. Applicants for exemptions under 29 U.S.C. 504 and 29 U.S.C. 1111; b. U.S. Department of Labor; c. Administrative Law Judges and others connected with labor or pension cases; d. Litigants proceeding against Parole Commission; e. The Commission's legal staff and other Commission personnel; f. Congressmen and others making inquiries of Commission; g. Commission Members and employees responding to inquiries, corresponding with others, preparing speeches, policy statements and other means of contact with other branches of the Federal Government, State, and local governments, and the public.

Systems exempted from certain provisions of the act: The Attorney General has exempted this system from subsections (c) (3) and (4), (d), (c) (2) and (3), (4) (G) and (H), (c) (8), (f) and (g) of the Privacy Act pursuant to 5 U.S.C. 552a(j)(2). Rules have been promulgated in accordance with the requirements of 5 U.S.C. 553 (b), (c) and (e) and have been published in the Federal Register.

JUSTICE/PRC-005

System name: Office Operation and Personnel System

System location: At each regional office as indicated in the "Inmate and Supervision File System Report" and at the U.S. Parole Commission, 320 First Street NW., Washington, D.C. 20537.

Categories of individuals covered by the system: Present and former Commission Members and employees of the U.S. Parole Commission.

Categories of records in the system: Personnel records, leave records, property schedules, budgets and actual expense figures, obligation schedules, expense and travel vouchers, and the balance of the usual paperwork to run a Government office efficiently.

Authority for maintenance of the system: All statutory sections, CFR sections, and *OPM, MSPB,* GSA, and OMB directives establishing procedures for government personnel, financial, and operational functions.

Routine uses of records maintained in the system, including categories of users and the purposes of such uses: Day-to-day activity involving personnel, financial. Procurement, maintenance, recordkeeping, mail delivery, and management functions.

Release of information to the news media: Information permitted to be released to the news media and the public pursuant to 28 CFR 50.2 may be made available from systems of records maintained by the Department of Justice unless it is determined that release of the specific information in the context of a particular case would constitute an unwarranted invasion of personal privacy.

Release of information to Members of Congress: Information contained in systems of records maintained by the U.S. Parole Commission, not otherwise required to be released pursuant to 5 U.S.C. 552, may be made available to a Member of Congress or staff acting upon the Member's behalf when the Member or staff requests the information on behalf of and in response to a communication from the individual who is the subject of the record.

Release of information to the National Archives and Records Service: A record from a system of records may be disclosed as a routine use to the National Archives and Records Service (NARS) in records management inspections conducted under the authority of 44 U.S.C. 2904 and 2906.

Policies and practices for storing, retrieving, accessing, retaining, and disposing of records in the system:

Storage: Records are in paper files or on computer printouts. They are stored in operations areas of offices.

Retrievability: Data of a personal nature is in employee personnel files, used by Commission personnel on a "need to know" basis. Each employee has a right to see his own file on request. Other files are used by Commission personnel on a "need to know" basis.

Safeguards: Files are supervised by appropriate personnel during the working day and are in locked rooms at night.

Retention and disposal: Subject to applicable *OPM, MSPB,* OMB, DOJ, and GSA regulations.

System manager(s) and address: Executive Assistant to the Chairman, U.S. Parole Commission, 320 First Street NW., room *816A*, Washington, D.C. 20537.

Notification procedure: Same as the above.

Record access procedures: Same as the above.

Contesting record procedures: Same as the above.

Record source categories: Parole Commission employees, Office of Management and Finance. All other contributing Government agencies.

Systems exempted from certain provisions of the act: None.

JUSTICE/PRC-006

System name: Statistical, Educational and Developmental System

System location: Parole Commission Headquarters, 320 First Street, *8th* Floor, Washington, D.C. 20537.

Categories of individuals covered by the system: Any inmate or former inmate under custody of the Attorney General including former inmates supervised as parolees or mandatory releasees.

Categories of records in the system: All records as described in the Workload Record, Decision Result, and Annual Report System plus data on additional input forms known as Revocation Data Sheets, Parole Decision Information Sheet, certain follow-up forms and the Salient Factor Worksheet Form. These forms include criminal history-type data elements regarding specific individuals selected from the above category of individual. This data is either organized and processed by hand or is input into a computer and has been used to provide the following one-time reports in pamphlet-text form: a) Administrative Review of Parole Selection and Revocation decisions; b) Parole Decisionmaking, a Salient Factor Score; c) Effect of Representation at Parole Hearings; d) Parole Decisionmaking—Structuring Discretion; e) Time Served and Release Performance—A Federal Sample and certain additional reports, all available in the public reading room. The data base collected as described in this and the preceding system will be used to prepare studies on similar or related subjects in the future. It has been used to develop revocation guidelines similar to parole guidelines. Items collected for this data base may change depending on the subject matter of new studies to be undertaken by the Commission.

Authority for maintenance of the system: 18 U.S.C. 4201-4218, 5005-5041, 28 CFR Part O, Subpart V, 28 CFR Part 2.

Routine uses of records maintained in the system, including categories of users and the purposes of such uses: a. Internal—Develop methodology for a more scientific determination of parolability and revocability, methodology to comply with changing concepts of due process, and methodology to select persons to be released from prison who will be less likely to recidivate.

b. External—Add to the general body of knowledge in the parole area of criminology, and provide educational material for other parole boards, and members of the criminal justice and academic communities interested in this subject. Published pamphlets in text form are prepared on subjects of interest in this area of criminology and are circulated freely. They contain no references to individuals, either by name, address, register number or other means of identification. They do not contain recognizable fact situations, descriptions, or other writings through which identification of any individual within the present or former jurisdiction of the Parole Commission can be made.

Release of information to the news media: Information permitted to be released to the news media and the public pursuant to 28 CFR 50.2 may be made available from systems of records maintained by the U.S. Parole Commission unless it is determined that release of the specific information in the context of a particular case would constitute an unwarranted invasion of personal privacy.

Release of information to Members of Congress: Information contained in systems of records maintained by the U.S. Parole Commission not otherwise required to be released pursuant to 5 U.S.C. 552, may be made available to a Member of Congress or staff acting upon the Member's behalf when the Member or staff requests the information on behalf of and in response to a communication from the individual who is the subject of the record.

Release of information to the National Archives and Records Service: A record from a system of records may be disclosed as a routine use to the National Archives and Records Service (NARS) in records management inspections conducted under the authority of 44 U.S.C. 2904 and 2906.

Policies and practices for storing, retrieving, accessing, retaining, and disposing of records in the system:

Storage: Data is in input forms, IBM card decks and on computer produced storage media. It is stored as described in the preceding system description. Pamphlet text reports are public documents stored in offices, libraries, and in bookshelves, and in the public reading room.

Retrievability: Information by name, register number or FBI identification number may be retrieved from the input forms, card decks, or *storage media.* This material is used only by authorized parole *commission* research personnel on a "need to know" basis and is data

processed only by authorized Bureau of Prisons *or Justice Department* personnel. Material is not retrieved in identifiable form except that computer produced "hard copy" may be used as a temporary expedient to prepare a report. The final pamphlet text reports and material resulting from studies are used by Commission personnel for internal purposes and the public externally. None of this material contains any reference to an individual. *Documents* which contains information *concerning* one individual *are* made available to that individual if requested under the *Privacy* Act.

Safeguards: See "Safeguards" of preceding system regarding input forms, IBM cards or tape. Reports in pamphlet form are not safeguarded.

Retention and disposal: See "Retention and Disposal" of preceding system. The studies in pamphlet form are not disposed of on schedule. Some will be maintained perpetually in archives.

System manager(s) and address: Research Director, U.S. Parole Commission, 320 First Street NW., Room *850*, Washington, D.C. 20537.

Record source categories: a. Commission inmate files; b. Docket Sheets; c. Commission Notices of Action, orders and documentation following hearings; d. Commission warrant applications and warrants; e. General Commission records and data; f. Enforcement agency records regarding former inmates.

Systems exempted from certain provisions of the act: The Attorney General has exempted this system from subsections (c) (3) and (4), (d), (e) (2) and (3), (e)(4) (G) and (H), (e)(8), (f), and (g) of the Privacy Act pursuant to 5 U.S.C. 552a (j)(2). Rules have been promulgated in accordance with the requirements of 5 U.S.C. 553 (b), (c), and (e) and have been published in the Federal Register.

JUSTICE/PRC-007

System name: Workload Record, Decision Result, and Annual Report System

System location: U.S. Parole Commission Headquarters, 320 First Street, 3d Floor, Washington, D.C. 20537.

Categories of individuals covered by the system: Any inmate and parolee or mandatory releasee who has been the subject of a decision for the period covered in the report for which the data is used (prior month, prior quarter, or prior year).

Categories of records in the system: Certain original input forms indicate the inmate or person under supervision by name and register number and give the date and specific statistical detail as to the decision made. They include criminal history type of information regarding the persons in question. Types of decisions covered in order of the form numbers above are or record review, after Regional Appeal, after National Appeal, and after a decision reopening and modifying. The data is input into a computer and is used to provide the following: (a) A monthly report of workload containing number and type of hearings per region further broken out by institutions within regions and type of sentence; (b) *Bimonthly* report on decision results indicating, among other statistics, number and type of decisions within, above, and below guidelines broken out by examiners making the decisions; (c) Together with hand posted data on other items of statistical value, this data is being used to create the Annual Report of the Commission.

Authority for maintenance of the system: 18 U.S.C. 4201-4218, 5005-5041, 28 CFR Part O, Subpart V, 28 CFR Part 2.

Routine uses of records maintained in the system, including categories of users and the purposes of such uses: (a) These records are used internally to analyze work product, the performance of evaluators, and various types of procedures and hearings and to evaluate the guidelines themselves.

(b) These records are used to prepare an annual report to the Attorney General, and Congress and the public indicating in quantitative and qualitative terms Commission activity and accomplishment.

(c) In the event that material in this system indicates a violation or potential violation of law, whether civil, criminal or regulatory in nature, and whether arising by general statute, or by regulation, rule or order issued pursuant thereto, the relevant records may be referred to the appropriate agency, whether Federal, State, local, or foreign charged with the responsibility of investigating or prosecuting such violation or charged with enforcing or implementing the statute, rule, regulation or order issued pursuant thereto.

(d) A record from this system of records may be disclosed to a Federal, State, or local agency maintaining civil, criminal or other relevant information if necessary to obtain information relevant to Parole Commission matters.

(e) A record from this system may be disclosed to a Federal agency, in response to its request, in connection with the hiring or retention of an employee, the issuance of a security clearance, the reporting of an investigation of an employee, the letting of a contract, or the issuance of a license, grant or other benefit by the requesting agency, to the extent that information is relevant and necessary to the requesting agency's decision on the matter.

Release of information to the news media: Information permitted to be released to the news media and the public pursuant to 28 CFR 50.2 may be made available from systems of records maintained by the U.S. Parole Commission unless it is determined that release of the specific information in the context of a particular case would constitute an unwarranted invasion of personal privacy.

Release of information to Members of Congress: Information contained in systems of records maintained by the U.S. Parole Commission not otherwise required to be released pursuant to 5 U.S.C. 552, may be made available to a Member of Congress or staff acting upon the Member's behalf when the Member or staff requests the information on behalf of and in response to a communication from the individual who is the subject of the record.

Release of information to the National Archives and Records Service: A record from a system of records may be disclosed as a routine use to the National Archives and Records Service (NARS) in records management inspections conducted under the authority of 44 U.S.C. 2904 and 2906.

Policies and practices for storing, retrieving, accessing, retaining, and disposing of records in the system:

Storage: Paper input forms are stored in folders only until information from them is *entered into machine readable media.* Monthly and other reports in the form of computer printouts are filed in folders. Annual report is in book form and stored in library shelves.

Retrievability: Data in this system can be retrived by inmate's name and register number from the original input forms, IBM card decks, *and computer-produced storage media.* It is *usually* only retrieved by region, by examiner, by type of decision made or hearing held, by relation to the guidelines and other similar means except for individual case retrievability in the guideline section of the *bimonthly.*

Safeguards: Data on forms, IBM cards, and/or tape *or other computer produced storage media* retrievable by individual is stored in the *Commission's* Office in cabinets. Commission employees supervise this data by day and use it on a "need to know" basis. The room where it is stored *are* locked outside of office hours, and the entire Headquarters building is guarded and secured. Monthly and *other* reports are for use of the Chairman, his Executive Assistant and Commission Members and professional personnel. No information thereon is retrievable as pertaining to any individual except certain breakouts by Parole Commission employee examiners and by inmate in the guideline section of reports. These printouts are stored in the Commission Headquarters offices, all of which are supervised by day, locked at night, and are in a secured building. The Annual Report contains no information identifiable by individual and is a public document.

Retention and disposal: Completed input forms—1. Until data is keypunched into IBM cards—usually 1 month after forms are completed. They are then destroyed; 2. IBM card decks or *other* tape substitute—10 years after preparation, cards will be destroyed—tape degaussed; 3. Printouts of annual and *other* reports—10 years; 4. Annual Reports—Some copies retained perpetually in Archives.

System manager(s) and address: Executive Assistant to the Chairman, Room *816A*, U.S. Parole Commission, 320 First Street NW., Washington, D.C. 20537.

Record source categories: (a) Commission inmate files; (b) Docket sheets; (c) Commission notices of action, orders and documentation following hearings; (d) Commission warrant applications and warrants; (e) General Commission records and data.

Systems exempted from certain provisions of the act: The Attorney General has exempted this system from subsections (c) (3) and (4), (d), (e) (2) and (3), (c)(4) (G) and (H), (e)(8), (f), and (g) of the Privacy Act pursuant to 5 U.S.C. 552a(j)(2). Rules have been promulgated in accordance with the requirements of 5 U.S.C. 553 (b), (c) and (e) and have been published in the Federal Register.

Bureau of Prisons (BOP)

The Bureau of Prisons proposes to amend one system of records and delete another. The Bureau proposes to amend the Inmate Central Records System (JUSTICE/BOP-005) by modifying the language under "Retention and disposal" to show differing periods of retention of records for sentenced and unsentenced inmates, and to delete the Inmate Safety and Accident Compensation Record System (JUSTICE/BOP-005) which was published in error. The Inmate Central Records System (JUSTICE/BOP-005) and the Bureau of Prisons appendix of field locations identified as (JUSTICE/BOP-999) are reprinted below. The appendix is reprinted to reflect current institution addresses.

JUSTICE/BOP-005

System name: Inmate Central Records System

System location: Records may be retained at any of the Bureau's facilities, the Regional Offices and the Central Office. All requests for records may be made to the Central Office: U.S. Bureau of Prisons; 320 First Street, N.W., Washington, D.C. 20534.

Categories of individuals covered by the system: Current and former inmates under the custody of the Attorney General.

Categories of records in the system: 1) Computation of sentence and supportive documentation; 2) Correspondence concerning pending charges, and wanted status, including warrants; 3) Requests from other federal and non-federal law enforcement agencies for notification prior to release; 4) Records of the allowance, forfeiture, withholding and restoration of good time; 5) Information concerning present offense, prior criminal background, sentence and parole from the U.S. Attorneys, the Federal Courts, and federal prosecuting agencies; 6) Identification data, physical description, photograph and fingerprints; 7) Order of designation of institution of original commitment; 8) Records and reports of work and housing assignments; 9) Program selection, assignment and performance adjustment/progress reports; 10) Conduct Records; 11) Social background; 12) Educational data; 13) Physical and mental health data; 14) Parole Board orders, actions and related forms; 15) Correspondence regarding release planning, adjustment and violations; 16) Transfer orders; 17) Mail and visit records; 18) Personal property records; 19) Safety reports and rules; 20) Release processing forms and certificates; 21) interview request forms from inmates; 22) General correspondence; 23) Copies of inmate court petitions.

Authority for maintenance of the system: This system is established and maintained under authority of 18 U.S.C. 4003, 4042, 4082.

Routine uses of records maintained in the system, including categories of users and the purposes of such uses: The routine uses of this system are (a) to provide documented records of the classification, care, subsistence, protection, discipline and programs, etc., of persons committed to the custody of the Attorney General; (b) to provide information source to officers and employees of the Department of Justice who have a need for the information in the performance of their duties; (c) to provide information source to state and federal law enforcement officials for investigations, possible criminal prosecutions, civil court actions, or regulatory proceedings; (d) to provide information source for disclosure of information that are matters solely of general public record, such as name, offense, sentence data, release date, and etc; (e) to provide information source for disclosure to contracting or consulting correctional agencies that provide correctional services for federal inmates; (f) to provide informational source for responding to inquiries from federal inmates involved or Congressional inquiries; (g) Internal Users—Employees of the Department of Justice who have a need to know information in the performance of their duties; (h) External Users—State and Federal law enforcement officials for the purposes of investigation, possible criminal prosecution, civil court actions, and regulatory proceedings; state correctional agencies providing services to federal inmates; (i) to provide information relating to federal offenders to federal and state courts, court personnel, and probation officials.

Release of information to the news media: Information permitted to be released to the news media and the public pursuant to 28 CFR 50.2 may be made available from systems of records maintained by the Department of Justice unless it is determined that release of the specific information in the context of a particular case would constitute an unwarranted invasion of personal privacy.

Release of information to Members of Congress: Information contained in systems of records maintained by the Department of Justice, not otherwise required to be released pursuant to 5 U.S.C. 552, may be made available to a Member of Congress or staff acting upon the Member's behalf when the Member or staff requests the information on behalf of and at the request of the individual who is the subject of the record.

Release of information to the National Archives and Records Service: A record from a system of records may be disclosed as a routine use to the National Archives and Records Service (NARS) in records management inspections conducted under the authority of 44 U.S.C. 2904 and 2906.

Policies and practices for storing, retrieving, accessing, retaining, and disposing of records in the system:

Storage: Information maintained in the system is stored on documents, magnetic tape, magnetic disk, tab cards, and microfilm.

Retrievability: 1) Documents, Tab Cards and Microfilm—Information is indexed by name and/or register number. 2) Magnetic Tape and Disk—information is indexed by Name, Register Number, Social Security Number, and FBI Number.

Safeguards: Information is safeguarded in accordance with Bureau of Prisons rule governing access and release.

Retention and disposal: Records *of a sentenced inmate* are retained for a period of thirty (30) years after expiration of sentence, then destroyed by shredding. *Records of an unsentenced inmate are retained for a period of ten (10) years after the inmate's release from confinement, then destroyed by shredding.*

System manager(s) and address: Chief, Management and Information Systems Group; U.S. Bureau of Prisons; 320 First Street, N.W.; Washington, D.C. 20534.

Notification procedure: Address inquiries to: Director; Bureau of Prisons; 320 First Street, N.W.; Washington, D.C. 20534. The major part of this system is exempt from this requirement under 5 U.S.C. 552a (j). Inquiries concerning this system should be directed to the System Manager listed above.

Record access procedures: The major part of this system is exempt from this requirement under 5 U.S.C. 552a (j). To the extent that this system of records is not subject to exemption, it is subject to access and contest. A determination as to exemption shall be made at the time a request for access is received.

Contesting record procedures: Same as the above.

Record source categories: 1) Individual inmate, 2) Federal law enforcement agencies and personnel, 3) State and federal probation services; 4) Non-federal law enforcement agencies; 5) Educational institutions; 6) Hospital or medical sources; 7) Relative, friends and other interested individuals or groups in the community; 8) Former or future employers; 9) Evaluations, observations, reports, and findings of institution supervisors, counselors, boards and committees.

Systems exempted from certain provisions of the act: The Attorney General has exempted this system from subsections (c)(3) and (4), (d), (e)(2) and (3), (e)(4)(H), (e)(8), (f) and (g) of the Privacy Act pursuant to 5 U.S.C. 552a (j). Rules have been promulgated in accordance with the requirements of 5 U.S.C. 553 (b), (c) and (e) and have been published in the Federal Register.

JUSTICE/BOP-999

System name: Appendix of Field Locations for the Bureau of Prisons

Regional Offices
Northeast Region
Scott Plaza II, Industrial Highway
Philadelphia, Pennsylvania 19113

Southeast Region
523 McDonough Boulevard, S.E.
Atlanta, Georgia 30315

North Central Region
K.C.I. Bank Bldg.
8800 Northwest 112th Street
Kansas City, Missouri 64153

South Central Region
3883 Turtle Creek Blvd.
Dallas, Texas 75219

Western Region
330 Primrose Road, Fifth Floor
Burlingame, California 94010

United States Penitentiaries
Atlanta, Georgia 30315
Leavenworth, Kansas 66048
Lewisburg, Pennsylvania 17837
Marion, Illinois 62959
McNeil Island, Steilacoom, Washington 98388
Terre Haute, Indiana 47808

Federal Correctional Institutions
Alderson, West Virginia 24910
Ashland, Kentucky 41101
Bastrop, Texas 78602
Butner, North Carolina 27509
Danbury, Connecticut 06801
El Reno, Oklahoma 73036
Englewood, Colorado 80110
Ft. Worth, Texas 76119
La Tuna, Texas 88021
Lexington, Kentucky 40507
Lompoc, California 93436
Memphis, Tennessee 38134
Miami, Florida 33177
Milan, Michigan 48160
Morgantown, West Virginia 26505
Oxford, Wisconsin 53952
Petersburg, Virginia 23803

Pleasanton, California 94568
Sandstone, Minnesota 55072
Seagoville, Texas 75159
Talladega, Alabama 35362
Tallahassee, Florida 32304
Terminal Island, California 90731
Texarkana, Texas 75501

Federal Prison Camps
Allenwood-Montgomery, Pennsylvania 17752
Big Spring, Texas 79720
Boron, California 93516
Eglin Air Force Base, Florida 32542
Maxwell Air Force Base, Montgomery, Alabama 36112
Safford, Arizona 85546

Medical Center for Federal Prisoners
Springfield, Missouri 65802

Federal Dentention Center
Florence, Arizona 85232

Metropolitan Correctional Centers
71 W. Van Buren Street
Chicago, Illinois 60605

150 Park Row
New York, New York 10007

808 Union Street
San Diego, California 92101

Community Treatment Centers
826 S. Wabash Ave.
Chicago, Illinois 60605

3401 Gaston Ave.
Dallas, Texas 75248

1950 Trumbull Ave.
Detroit, Michigan 43216

2320 LaBranch Ave.
Houston, Texas 77044

404 E. 10th St.
Kansas City, Missouri 64106

1720 Chestnut Avenue
Long Beach, California 90813

Woodward Hotel
210 West 55th Street
New York, New York 10019

205 MacArthur Blvd.
Oakland, California 94610

316 W. Roosevelt Rd.
Phoenix, Arizona 85003

[FR Doc. 80-396 Filed 1-9-80; 8:45 am]
BILLING CODE 4410-01-M

federal register

Thursday
January 10, 1980

Part III

Department of Transportation

Federal Aviation Administration

Policies and Procedures for Considering Environmental Impacts: FAA Order 1050.1C

DEPARTMENT OF TRANSPORTATION

Federal Aviation Administration

Policies and Procedures for Considering Environmental Impacts: FAA Order 1050.1C

AGENCY: Federal Aviation Administration (FAA), DOT.

ACTION: Publication of FAA Order 1050.1C.

SUMMARY: FAA Order 1050.1C entitled "Policies and Procedures for Considering Environmental Impacts" supersedes Order 1050.1B dated June 16, 1977. This order is issued in response to regulations promulgated by the Council on Environmental Quality (CEQ) which set uniform policies and procedures for considering environmental impacts of Federal actions. The FAA notes that this order will be referenced, or incorporated by reference, in various provisions of the Federal Aviation Regulations (14 CFR Chapter I) and, thus, has regulatory significance. References to it will be substituted by amendments to the affected provisions. This order reflects the comments submitted to the docket in response to publication of the Draft Order 1050.1C (44 FR 32094; June 4, 1979).

EFFECTIVE DATE: December 21, 1979.

FOR FURTHER INFORMATION CONTACT: Mr. Richard N. Tedrick, Noise Policy and Regulatory Branch (AEE-110), Noise Abatement Division, Office of Environment and Energy, Federal Aviation Administration, 800 Independence Avenue, S.W., Washington, D.C. 20591; telephone (202) 755-9027.

SUPPLEMENTARY INFORMATION: On November 29, 1978, the CEQ published its final regulations establishing uniform procedures for implementing the procedural provisions of the National Environmental Policy Act (43 FR 55978). "The principal aims of those regulations are "* * * to reduce paperwork, to reduce delays, and to produce better decisions." Under Part 1507 of the CEQ regulations, Federal agencies must adopt any necessary implementing procedures after publishing them for public comment and submitting them to CEQ for review. This order is issued in accordance with that requirement.

Order 1050.1C was prepared in response to the CEQ regulations to amend FAA's policies and procedures for integrating national environmental objectives into current agency policies and decisionmaking processes. The order provides in a single, comprehensive document the essential treatment of the environmental assessment process for the broad range of FAA programs and projects.

The FAA notes that Appendix 6 of the order, is a self-contained unit prescribing requirements for preparing environmental documents in conjunction with certain Federal actions associated with airport development and grant programs. Sponsors submitting applications for airport development aid are currently required by § 152.23(a)(6) of Part 152 of the Federal Aviation Regulations to submit with their applications an environmental impact assessment that meets the requirements of Appendix 6. Similarly, public agencies applying for a conveyance of a property interest owned or controlled by the United States are required by § 154.7(b)(14) of Part 154 to submit an environmental impact assessment that conforms to that appendix. Appendix 6 is incorporated by reference into both of those parts.

While the proposed order did not incorporate verbatum Order DOT 56.10.1C, "Procedures for Considering Environmental Impacts; Policies and Procedures" (44 FR 56420; October 1, 1979), and CEQ "Regulations for Implementing the Provisions of the National Environmental Policy Act" (43 FR 55978; November 29, 1978), these have been added as Appendicies 8 and 9, respectively, since persons using this order will need the information contained therein. However, since Order DOT 5610.1C and the CEQ regulations have previously been published in the **Federal Register** as cited above, they are not being reprinted at this time. Subsequent changes to these two documents will be incorporated without separate order.

Summary of Comments

A total of eight comments were received; one from an individual, two from private associations, three from State or local agencies, and two from other Federal agencies. Three commenters felt that the order was too long and suggested that a shorter, generalized order be issued. After a series of internal reviews and revisions, the order has been reduced in size by approximately fifty-percent. The sections addressing format and content of EISs have been reduced or eliminated. This information may be published as a separate guidelines document. Paragraph 8, Environmental Descriptors, was deleted from Appendix 2, and all duplication between the order and Appendix 6 was eliminated.

The Environmental Protection Agency (EPA) and two other commenters suggested that a single noise descriptor should be used throughout the order and in all of the required reports and documentation, except where required to satisfy overriding State and local requirements. This comment has been adopted and Ldn is specified as the appropriate noise descriptor.

One commenter indicated that the order does not require notification of the local government, within whose boundaries the facility is located, when a Finding of No Significant Impact (FONSI) has been made. For airport development actions, paragraph 66 (Appendix 6) provides for availability of the FONSI to the affected public in accordance with the CEQ Regulations. In addition for most airports, the sponsor (airport owner) is the local government. Adequate notice should be provided through the requirement that the FAA release a public notice on a quarterly basis of all FONSIs and that in certain cases where the proposed action is similar to that requiring an Environmental Impact Statement or where the proposed action is unprecedented, the FONSI will be made available for public review.

Two of the commenters, EPA and the Department of Housing and Urban Development (HUD), believed the emphasis in the noise area was too narrowly defined. One felt that aircraft noise was over emphasized so that other noise sources were neglected, the other, that aircraft noise other than jet airplane noise was not given sufficient consideration. Any analysis of environmental impact must consider the whole environment to the extent appropriate to the problem under study. Consideration of noise sources other than aircraft is implicit in the review process. However, as a result of the FAA's mission and the nature of the projects which are subject to this order, it must be primarily concerned with aircraft noise. Such projects often result in increased aircraft activity and aircraft noise usually is viewed by the community as being a major component of the noise environment. Additional emphasis will be given to non-jet airplanes and to helicopters in supplemental material, substantially as suggested by EPA.

EPA and other commenters provided a variety of comments and suggestions related to paragraphs 345 through 374, and Appendix 6, paragraph 47 regarding format and content of environmental assessments and impact statements. Almost all of this material has been deleted but will be provided in separate supplemental guidance material at a later date. Comments related to these sections will be carefully considered.

HUD questioned whether references in Appendix 6 to noise exposure "created without the project" related to present or forecast exposure and included sources other than aircraft. The reference could apply to either present or future change in noise exposure, whichever is greater. The initial noise analysis includes only aircraft. If additional analysis is needed, then ambient noise levels including sources other than aircraft are considered when appropriate.

One commenter pointed out that many projects are excluded from A-95 review, which includes public hearings, and expressed the concern that public interest may not surface until late in the project. The actions which do not require environmental assessment as identified in Paragraph 23 of Appendix 6 are those which are expected not to have environmental impacts off airport property. Most of these actions are also excluded from the A-95 review process. Environmental controversy is highly unlikely to exist for such items, but interested citizens should be able to determine when any development is contemplated by keeping in touch with airport management.

Exemption of ongoing environmental assessments from the new requirements was suggested by one commenter. The effective date of the order is specifically directed to environmental impact statements. Evaluation of the contents of environmental assessments for conformance with new requirements will be made on a case-by-case basis, applying the provision in CEQ Regulations 1506.12(a) that "No completed environmental documents need be redone by reason of these regulations."

Another commenter suggested that rather than exclude certain airports from noise analysis requirements based on a calculated level of 60-65 Ldn, it would be better to require the calculation to be performed in a simplified "back-of-the-envelope" manner. The levels of operations at smaller airports, below which no noise analysis is needed, have been determined by noise calculation to avoid the need for specific analysis in each case. Specific noise mitigation measures applicable and possible in a given situation will vary considerably and depend on a number of circumstances as described in the DOT/FAA aviation noise policy issued in 1976. Identification of these measures in this order is inappropriate. If necessary, it would need to be either extremely cumbersome or incomplete and misleading.

Some commenters submitted detailed comments to clarify portions of the order and eliminate apparent conflicts between different sections. Many of these comments were incorporated as suggested and others were modified to be consistent throughout the order.

Accordingly, the FAA publishes the following Order 1050.1C entitled "Policies and Procedures for Considering Environmental Impacts." (National Environmental Policy Act of 1969 as amended (42 U.S.C. 4321 et. seq.); the Environmental quality Improvement Act of 1970, as amended (42 U.S.C. 4371 et. seq.); Section 309, Clean Air Act, as amended (42 U.S.C. 7609); Sec. 4(f), Department of Transportation Act of 1966, as amended (49 U.S.C. 1653(f)); Executive Order 11514, dated March 4, 1970, as amended by Executive Order 11991, dated May 24, 1977; 40 CFR Parts 1500-1508; DOT Order 5610.1C (44 FR 56420; September 18, 1979)).

Issued in Washington, D.C., on December 21, 1979.

Langhorne Bond,

Administrator.

Table of Contents

Chapter 1. General

Section 1. Application
1. Purpose
2. Distribution
3. Cancellation
4. Explanation of Changes
5. Definitions
6. Policy
7. Regulatory Actions
8. Applicability
9. Policies, Plans, and Programs
10. Categorical Exclusions
11. Responsibilities
12. Changes to this Directive
13.-99. [Reserved]

Section 2. Commonality With Other Actions
100. Incorporation of CEQ Regulations
101. Incorporation by Reference
102. Written Reevaluation
103. Tiering
104. Reducing Paperwork
105. Reducing Delay
106.-199. [Reserved]

Chapter 2. Preliminary Procedures

Section 1. Preliminary Reviews
200. Planning and Development
201. Initial Review
202. Identification of Issues and Problems
203. Early Coordination
204. Budgetary Requirements
205. Research
206. Use of Contractors
207. Role of Lead and Cooperating Agencies
208. Cumulative Impact
209. Noise Analyses

Section 2. Preliminary Consultation
210. Consultation
211. Cooperating Agencies
212. A-95 Review
213. Public Hearings
214. Citizen Involvement
215. Scoping
216.-299. [Reserved]

Chapter 3. Environmental Impact Statements and Findings of No Significant Impact

Section 1. Determination Whether an Action Is a Major Federal Action Significantly Affecting the Quality of the Human Environment
300. Environmental Assessment
301. Actions Requiring Environmental Impact Statements
302. Time and Length Limits
303.-304. [Reserved]

Section 2. Preparation of Draft Environmental Impact Statement or Findings of No Significant Impact
305. Timing of Draft Statement Preparation
306. Applications
307. Use of Consultants
308. Scoping
309. Inclusion of Environmental Determinations
310. Interdisciplinary Approach
311. Internal Review Process
312. Regulations
313. Legislative Proposals
314. Advisory Actions
315.-319. [Reserved]

Section 3. Processing of Draft Environmental Impact Statements
320. General
321. Public Notice
322. Copies
323. Circulation and Availability of DEIS
324. Comments on the DEIS
325. Comment Periods
326.-329. [Reserved]

Section 4. Findings of No Significant Impact
330. General
331. Scope of Documentation
332. Responsible Officials
333. Coordination
334. Distribution
335. Availability for Public Information
336.-339. [Reserved]

Section 5. Environmental Impact Statements
340. General
341. List of Preparers
342. Affected Environment
343.-374. [Reserved]

Section 6. Preparation, Approval and Distribution of Final Environmental Impact Statements
375. Utilization of Comments
376. Approval of Final Environmental Impact Statements
377. DOT Concurrence
378. Decisions Reserved to the Secretary
379. Availability Pending Approval
380. Distribution of Approved Environmental Impact Statements
381. Referrals to CEQ
382.-389. [Reserved]

Section 7. Supplemental Actions
390. Supplemental or Amended Statements
391. Implementation of Commitments in Environmental Statements
392. Limitations on Actions
393. Record of Decision
394. Public Record
395. Use of Information
396.-399. [Reserved]

Chapter 4. Additional Provisions

400. Review of Environmental Statements Prepared By Other Agencies
401. Quarterly Lists of Environmental Information
402. Emergency Action Procedures
403. Application of Section 102(2)(C) Procedure To Existing Projects and Programs
404. Land Acquisition and Construction of Facilities

405. Environmental Assessments or Findings of No Significant Impact on Requests from Foreign Sources
406.–499. [Reserved]
Appendix 1. Systems Research and Development
Appendix 2. Airway Facilities
Appendix 3. Air Traffic
Appendix 4. Aviation Standards
Appendix 5. Logistics
Appendix 6. Airport
Appendix 7. Environment and Energy
Appendix 8. Order DOT 5610.1C
Appendix 9. CEQ Regulations for Implementing the Provisions of the National Environmental Policy Act

Chapter 1. General

Section 1. Application

1. *Purpose.* This order establishes policies and procedures for the preparation of Environmental Impact Statements (EIS) and Finding of No Significant Impacts (FONSI) and requires consideration of environmental assessments in decisionmaking. Appendix 6, Airports, provides instructions and guidance for preparing and processing the environmental assessments of airport development proposals as requied by various laws and regulations. This order implements and transmits as Appendix 8, Order DOT 5610.1C, Procedures for Considering Environmental Impacts.

2. *Distribution.* This order is distributed to the director level in Washington with a branch level distribution in the Office of Airport Planning and Programming, and the Air Traffic, Airway Facilities, Office of Airworthiness, Logistics, and Systems Research and Development Services; to the director level in the regions with a branch level distribution in the Airports, Air Traffic, Airway Facilities, Flight Standards, and Logistics Divisions; to the director level in the overseas area offices; a limited distribution to field offices and facilities.

3. *Cancellation.* Order 1050.1B, Policies and Procedures for Considering Environmental Impacts is canceled.

4. *Explanation of Changes.* This order is responsive to the Council on Environmental Quality (CEQ) regulation for implementing the procedural provisions of the National Environmental Policy Act (43 FR 55978–56007, November 29, 1978, 40 CFR Parts 1500–1508; see Appendix 9) and consolidates FAA directives regarding policies and procedures for considering environmental impacts. It includes guidance on content and preparation, processing filing of environmental assessments, EIS's and FONSI's and guidance on citizen involvement.

5. *Definitions.*

a. *Council on Environmental Quality (CEQ) Terminology.* CEQ terminology implementing the National Environmental Policy Act of 1969 (NEPA) was published in their regulation. CEQ 1508.1 states "The terminology of this part shall be uniform throughout the Federal Government."

b. *Federal Aviation Administration (FAA) Terms.* Order 1000.15A, FAA Glossary, dated December 18, 1975, contains terms which recur most often in agency communications.

c. *Preliminary environmental review* is the required early examination of the environmental impacts of proposed actions used to alert program officers of the action's possible significant impacts on the quality of the human environment or of impacts which may be highly controversial on environmental grounds.

d. *Environmental Impact Statement.* CEQ 1508.11 states "Environmental Impact Statement means a detailed written statement as required by Section 102(2)(c) of the Act."

e. *Draft Environmental Impact Statement* is the document that reflects FAA's initial evaluation of the environmental impact of a proposed action. The agency makes its own evaluation and assumes responsibility for the DEIS. It is distributed by FAA to the EPA and other appropriate Federal, State, and local agencies for comment and is made available to the public.

f. *Final Environmental Impact Statement* is the document that reflects FAA's final evaluation of the environmental impact of a proposed action. Reports cited as references in the statement need not be included in the documentation. This EIS shall accompany the proposed action through the Federal decisionmaking process.

g. *Finding of No Significant Impact (FONSI)* means "a document by a Federal agency briefly presenting the reasons why an action, not otherwise excluded will not have a significant effect on the human environment and for which an environmental impact statement therefore will not be prepared. It shall include the environmental assessment or a summary of it and shall note any other environmental documents related to it. If the assessment is included, the finding need not repeat any of the discussion in the assessment but may incorporate it by reference"—CEQ 1508.13. This document is the same as negative declaration used previously under Order 1050.1B.

h. *Record of Decision (ROD)* is "a concise public record of decision." See CEQ 1505.2 and 1506.1 for requirements.

i. *Written Reevaluation.* This is an evaluation prepared by the FAA responsible official of a draft or final impact statement or a finding of no significant impact with section 16(c)(4) coordination which has exceeded the three-year time limitation specified in paragraph 102 of chapter 10. This evaluation will either conclude that the contents of previously prepared environmental documents remain valid or that significant changes require the preparation of a supplement or new environmental document.

j. *Responsible Official* is the official designated with overall responsibility to furnish guidance and participate in the preparation of environmental impact statements, to independently evaluate the statements prior to approval, and to take responsibility for the scope and content of the statements. This person may be authorized to evaluate and approve environmental assessments and may direct scoping activities for the FAA.

k. *Noise Sensitive Areas* may include residential neighborhoods, educational, health, and religious structures and sites, and outdoor recreational, cultural, and historic sites. A noise sensitive area is one where noise may interfere with the usual activities associated with use of the land. Whether sound interferes with a particular use depends upon the level of noise exposure received and the type of activities involved. A site which is unacceptable for outside use may be acceptable for use inside a structure if adequate noise attentuation features are built into that structure.

l. *Sponsor* is any public agency eligible to receive Federal financial assistance under the Airport Act or anyone proposing an airport development project for which a Federal authorization is required.

m. *Scoping* is "An early and open process for determining the scope of issues to be addressed and for identifying the significant issues related to a proposed action."—CEQ 1501.7.

6. *Policy.*

a. FAA will comply with both the procedures and the policies of the National Environmental Policy Act of 1969 (hereafter NEPA) and related orders, statutes, and regulations. This requires that the FAA include in its decisionmaking processes appropriate and careful consideration of all environmental effects of proposed actions, analyze potential environmental effects of proposed actions and their alternatives for public understanding and scrutiny, avoid or minimize adverse effects of proposed actions, and restore and enhance the resources and environmental quality of the nation. The FAA shall integrate these NEPA

considerations as early in the agency planning processes as possible.

b. The environmental review process outlined in this order shall be the focal point to assure that NEPA considerations are taken into account. Environmental Impact Statements (EIS's) and Findings of No Significant Impact (FONSI's) service to document compliance with these considerations and to reflect a thorough review of all relevant environmental factors, utilizing a systematic, interdisciplinary approach.

c. *These policies* are supplementary to other agency policies established under other statutes and directives.

7. *Regulatory Actions.* This order implements agency actions required by the statutes and directives (as amended) cited in subparagraphs 7a. through 7z.

a. *NEPA* (Pub. L. 91–190, 42 U.S.C. 4321) establishes a broad national policy to improve the relationship between humans and their environment, and sets out policies and goals to ensure that environmental considerations are given careful attention and appropriate weight in all decisions of the Federal Government.

b. *The Clean Air Act* as amended by Pub. L. 91–604 provides that the Administrator shall review and comment in writing on the air quality impacts of actions taken under his cognizance.

c. *Executive Order 11514,* Protection and Enhancement of Environmental Quality, dated March 4, 1970, orders all Federal agencies to "initiate measures needed to direct their policies, plans, and programs so as to meet national environmental goals."

d. *40 CFR Parts 1500–1508 (43 FR 55978, November 29, 1978)* CEQ Implementation of NEPA Procedural Provisions establishes uniform procedures, terminology, and standards for implementing the procedural requirements of NEPA's section 102(2) (see Appendix 9).

e. *Section 4(f) of the Department of Transportation Act of 1966* (Pub. L. 89–670 as amended by Pub. L. 90–495 hereafter, Section 4(f)) 49 U.S.C. 1653 states, "The Secretary * * * shall not approve any program or project which requires the use of any publicly owned land from a public park, recreation area, or wildlife and waterfowl refuge of national, State, or local significance * * * unless (1) there is no feasible and prudent alternative to the use of such land, and (2) such program includes all possible planning to minimize harm to such park, recreational area, wildlife and waterfowl refuge, or historic site resulting from such use."

f. *The Airport and Airway Development Act of 1970* (Pub. L. 91–258), 49 U.S.C. 1701 establishes the airport development grant program and provides that project may not be approved unless the Secretary is satisfied that the project is reasonably consistent with plans (existing at the time of approval of the project) of planning agencies for development of the area in which the airport is located. Each airport development project must also "provide for the protection and enhancement of the natural resources and the quality of environment of the Nation." The Secretary may not authorize a project involving airport location, major runway extension, or runway location found to have an adverse effect unless he finds, in writing, after full and complete review, that "no feasible and prudent alternative exists and that all possible steps have been taken to minimize such adverse effect."

g. *The Noise Control Act of 1972* (Pub. L. 92–574) 42 U.S.C. 4901 (as amended by S. 3083) provides for Environmental Protection Agency (EPA) consultation on noise standards and also permits EPA to propose aviation noise regulations to the FAA.

h. *Section 106 of the National Historic Preservation Act of 1966* (Pub. L. 89–665 hereafter, the Historic Preservation Act) 16 U.S.C. 470f requires the head of any Federal agency having jurisdiction over a Federal or Federally-assisted undertaking to take into account, prior to approving the undertaking, its effect on any district, site, building, structure, or object that is included in the National Register of Historic Places, and to give the Advisory Council on Historic Preservation a reasonable opportunity to comment on the undertaking.

i. *Executive Order 11593, Protection and Enhancement of the Cultural Environment,* requires that Federal plans and programs contribute to the preservation and enhancement of sites, structures, and objects of historical, architectural, or archaeological significance.

j. *36 CFR Part 800 (39 FR 3365, January 25, 1974, and 44 FR 6068, January 30, 1979) Procedures for the Protection of Historic and Cultural Properties,* establishes procedures to ensure that historic and cultural resources are given proper consideration in the preparation of environmental impact statements.

k. *The Archaeological and Historic Data Preservation Act of 1974* 16 U.S.C. 469 is directed to the preservation of historic and archaeological data that would otherwise be lost as a result of Federal construction or other Federally licensed or funded activities.

l. *The Coastal Zone Management Act of 1972* (Pub. L. 90–583) 43 U.S.C. 1241 states that "it is national policy (a) to preserve, protect, develop, and where possible, to restore or enhance, the resources of the Nation's coastal zone * * *" (Section 303); and requires all Federal or Federally supported activities affecting the zone to be carried out in manner consistent with State coastal zone management programs (Section 307). 15 CFR Part 930, *Federal Consistency With Approved Coastal Management Programs,* establishes procedures for determining consistency.

m. *Section 2 of the Water Bank Act* (Pub. L. 91–559) 16 U.S.C. 1301 declares that "* * * it is in the public interest to preserve, restore, and improve the wetlands of the Nation * * *."

n. *Section 2 of the Fish and Wildlife Coordination Act* (Pub. L. 85–624) 16 U.S.C. 661 requires, with certain limited exceptions, that "whenever the waters of any stream or other body of water are proposed or authorized to be * * * impounded, diverted, the channel deepened, or the stream or other body of water otherwise controlled or modified for any purpose whatever * * * by any department or agency of the United States, or by any public or private agency under Federal permit or license, such department or agency shall first consult with the United States Fish and Wildlife Service, Department of the Interior, and with the head of the agency exercising administration over the wildlife resources of the particular State wherein the * * * control facility is to be constructed * * *" (Subsection (2)).

o. *Protection of Wetlands, Executive Order 11990 and Preservation of the Nation's Wetland, Order DOT 5660.1A,* of August 24, 1978, requires action to minimize the destruction, loss, or degradation of wetlands and to assure the protection, preservation, and enhancement of the Nation's wetlands to the fullest extent practicable during the planning, construction, and operation of transportation facilities and projects.

p. *The Endangered Species Act of 1973* (Pub. L. 93–205) 16 U.S.C. 1531 and 50 CFR Part 402, *Interagency Cooperation Regulation* require that all Federal agencies shall, in consultation with the Secretaries of Interior and Commerce, carry out programs for the conservation of endangered or threatened species listed by the Department of the Interior and insure that actions authorized, funded, or carried out by them do not jeopardize the continued existence of the endangered species or result in the destruction or modification of the habitat of such species to an extent

which is determined by the Secretary (of the Interior or Commerce) to be critical.

q. *Executive Order 11988, Floodplain Management 43 FR 6030 and Order DOT 5650.2, April 23, 1979, Floodplain Management and Protection* links the need to protect lives and property with the need to restore and preserve natural and beneficial floodplain values. Agencies are required to make a finding that there is no practicable alternative before taking action that would encroach on a floodplain.

r. *Notice DOT N 5610.4, Implementation of Decision to Address Environmental Design Considerations in Environmental Impact Statements of February 27, 1978,* requires consideration of design, art, and architecture to be documented in EISs and FONSIs, where relevant, and circulated to State and local art councils and other pertinent organizations.

s. *Section 201(a) of the Federal Land Policy and Management Act of 1976* (Pub. L. 94–570) 43 U.S.C. 1701 requires Federal agencies to consult the Bureau of Land Management to determine if land to be used for a Federal action is land which is being considered for inclusion in the National Wilderness System.

t. *The General Bridge Act of 1946* (Pub. L. 79–601) 33 U.S.C. 525 et seq., as amended by the *Department of Transportation Act of 1966* (Pub. L. 89–670), 49 U.S.C. 1655(q)(6)(C) requires U.S. Coast Guard approval for actions involving the construction or alteration of bridges over navigable waters.

u. *7 CFR Part 657 (43 FR 4030, January 31, 1978), Prime and Unique Farmlands* requires the responsible official to consult the U.S. Department of Agriculture's Land Use Committee to determine whether land to be affected by agency action is prime and unique farmland.

v. *Section 404 of the Federal Water Pollution Control Act Amendments for 1972* (Pub. L. 92–500) 33 U.S.C. 1344 as amended by the Clean Water Act of 1977 (Pub. L. 95–217) 33 U.S.C. 1251 establishes a permit procedure for activities involving dredging and filling of navigable waters. The Secretary of the Army, acting through the Army Corps of Engineers, is responsible for issuing such permits.

w. *Order DOT 5610.1C, Procedures for Considering Environmental Impacts, October 1, 1979,* provides guidelines for considering environmental impacts of transportation actions (see Appendix 8).

x. *Resource Conservation and Recovery Act of 1976* (Pub. Law 95–580), as amended by the Quiet Communities Act of 1978, provides environmental requirements in handling solid waste.

y. *Executive Order 12114, January 4, 1979,* provides pertinent environmental considerations with respect to proposed actions outside the United States, its territories and possessions.

z. *Order 1053.1, Policies and Procedures for Energy Planning and Conservation,* provides for assessing energy demands.

8. *APPLICABILITY.* The requirements in this order apply to, but are not limited to, the following: All grants, loans, contracts, leases, construction, research activities, rulemaking and regulatory actions, certifications, licensing, permits, plans submitted to the agency by State or local agencies which require FAA approval, and legislation proposed by FAA. Exceptions to these requirements are listed in paragraph 10.

9. *POLICY, PLAN OR PROGRAM STATEMENTS (FORMERLY "CLASS ACTIONS").* A general policy, plan or program may be covered by a single EIS or FONSI when the environmental impacts of all related actions, alternatives thereto, and measures to mitigate adverse environmental impacts, are substantially similar. (See § 1508.18 of the CEQ Regulations.)

10. *Categorical Exclusions.*

a. *Categorical Exclusions from the Requirement for an EIS or FONSI.*

(1) Administrative and operating actions, such as procurements, organizational changes, personnel actions, and legislative proposals not originating in FAA.

(2) Emergency measures regarding air or ground safety.

(3) Planning grants which do not imply a project commitment.

(4) Project amendments (e.g., increases in costs) which do not alter the environmental impact of the action.

(5) Policy and planning documents not intended for or which do not cause direct implementation of project or system actions.

(6) Agreements with foreign governments, international organizations, or U.S. Government departments calling for the provision of technical assistance, advice or services in foreign countries, such as votes or other similar actions in international conferences and organizations.

(7) The planning and development of projects and programs leading to Aeromedical Applications and Standards; personnel efficiency and performance.

(8) The approval or issuance of certificates covering medicals for airmen, delegated authority, ground schools; out-of-agency training; and aircraft repair or maintenance not affecting noise, emissions, or wastes.

(9) In addition to the exceptions noted above, each of the Service Appendices may provide for categorical exclusions of specific types of projects or categories of actions carried out by that Service.

b. *Documentation.* Categorical exclusions from this order and actions for which EISs have been filed do not require further documentation. Program FONSIs also do not require further documentation.

c. *An action* which has been categorically excluded in this order or for which an EIS or FONSI has been filed, but which in a particular case significantly affects the quality of the human environment, requires the preparation of an EIS.

11. *Responsibilities.*

a. Compliance with the policies and procedures of this order is the responsibility of the regional directors for all actions originating in the regions, heads of offices and services for all actions originating at headquarters, and center directors for all actions originating at centers.

b. Heads of offices and services are responsible for revising their appendices of this order, as appropriate; providing supplemental guidelines for implementing this order in their program areas, as appropriate; consulting with and advising responsible officials on matters within their operational areas, and evaluating and appraising of the activities to implement the requirements of NEPA.

c. Regional directors are responsible for developing programs for assigning personnel and other resources necessary to assess and document all relevant environmental factors; preparing and filing EISs and FONSIs as appropriate; assuring appropriate internal coordination of actions that cross program lines, and evaluating and appraising of the activities to implement the requirements of NEPA.

d. The Office of Environment and Energy (AEE) is responsible for overall review of FAA's environmental policies and procedures including NEPA compliance; developing and coordinating policies and procedures under this order; assisting services in developing guidance for their program areas; consulting with and advising responsible officials in their implementation of this order; developing training programs in cooperation with the Office of Personnel and Training and the services, and evaluating and appraising the activities to implement the requirements of NEPA.

e. *The Chief Counsel* and regional and center counsels provide legal counsel to all elements of FAA regarding the legal sufficiency of environmental documents.

f. *Other responsibilities* regarding specific program areas are set forth in Appendices 1–7 of this Order.

12. *Changes to this Directive.* The Director of Environment and Energy (AEE) may issue changes to chapters 1 through 4 of this order after coordinating the change with the concerned organization elements, and each office and service may issue changes to the appropriate appendix (i.e., Air Traffic Service for Appendix 3) after coordinating the change with the concerned organizational elements, including AEE and AGC, provided:

a. The change does not affect policy, delegations of authority, or assignment of responsibilities outside the office or service's authority;

b. The Administrator has not specifically reserved authority to make the change; and

c. Substantial changes are not made without the concurrence of the Office of the Assistant Secretary for Policy and International Affairs (hereafter P) and the Office of the General Counsel (hereafter C) and are published for comment in the Federal Register after consultation with CEQ.

13.–99 [*Reserved*].

Section 2. Commonality With Other Actions

100. *Incorporation of CEQ Regulations.* The uniform procedures, terminology and standards adopted by the CEQ for implementation of the procedural provisions of NEPA (40 CFR Parts 1500–1508; 43 FR 230, November 29, 1978) are herewith incorporated by reference. This order furnishes additional material as explantory guidance and as an aid to implement these regulations. (hereinafter, references to the CEQ Regulations shall simply identify the paragraph; e.g., CEQ 1508.1. The CEQ Regulations are included as Appendix 9 to this Order.)

101. *Incorporation by Reference.* CEQ 1502.21 states that: "Agencies shall incorporate material into an environmental impact statement by reference when the effect will be to cut down on bulk without impeding agency and public review of the action. The incorporated material shall be cited in the statement and its content briefly described. No material may be incorporated by reference unless it is reasonably available for inspection by potentially interested persons within the time allowed for comment. Material based on proprietary data which is itself not available for review and comment shall not be incorporated by reference."

102. *Written Reevaluation.* The preparation of a new EIS or FONSI is not necessary when it can be documented that: The proposed action conforms to plans or projects for which a prior EIS or FONSI has been filed; the data and analyses contained in the previous EIS or FONSI are still substantially valid; and that all pertinent conditions and requirements of the prior approval have or will be met in the current action. This evaluation, signed by the FAA responsible official, will either conclude the contents of previously prepared environmental documents remain valid or that significant changes require the preparation of a supplement or new environmental document.

103. *Tiering.* Program offices shall, to the extent practicable, build upon broad prior assessments, whether EIS or FONSI. For example, long term development statements and broad system, program, or regional statements may be incorporated by specific project EISs. The purpose of tiering is to eliminate repetition and allow discussion of issues at the appropriate level of detail. (See CEQ 1500.4, 1502.4, 1502.20, and 1508.28.)

104. *Reducing Paperwork.* Environmental documentation prepared under this order shall be concise and clear. Length of documentation shall be reduced by avoidance of needless detail and by other means such as setting appropriate page limits. (See CEQ 1500.4.).

105. *Reducing Delay.* Environmental documentation prepared under this order shall be integrated into the decisionmaking process and shall be carried on in a timely manner. (See CEQ 1500.5.)

106.–199. [*Reserved*]

Chapter 2. Preliminary Procedures

Section 1. Preliminary Reviews

200. *Planning and Development.* The environmental impacts of proposed actions shall be based on appropriate environmental consideration at the systems planning level and shall be assessed and considered concurrently with initial planning, development, or site considerations.

201. *Initial Review.* An environmental review will indicate whether the proposed project could significantly affect the human environment with respect to noise, land, air and water quality; and is located in wetlands, coastal zones, or historic or archaeological sites; or areas inhabited by endangered species; or areas protected under DOT Section 4(f) and whether the action would be highly controversial on environmental grounds. At this stage, documentation is required to alert program officers to foreseeable environmental impacts and controversies.

202. *Identification of Issues and Problems.* Based on the initial review described in paragraph 201, the program officer(s) shall identify issues and problems having environmental significance to Federal, State, or local officials in the performance of their duties, or to the public. Further, the program officer(s) shall determine whether such issues and problems, *as they pertain to the proposed action,* have been addressed already in a broad system, program, or regional assessment.

203. *Early Coordination.* CEQ 1501.4(b) states, "The agency shall involve environmental agencies, applicants, and the public, to the extent practicable, in preparing (environmental) assessment * * *" and in § 1506.2(b) "Agencies shall cooperate with State and local agencies to the fullest extent possible to reduce duplication between NEPA and State and local requirements, unless the agencies are specifically barred from doing so by some other law."

204. *Budgetary requirements.* The Office of Budget is responsible for assuring appropriate environmental consideration and documentation at the budget stage. Criteria for environmental consideration in the Airway Facilities budget process are in Airways Facilities, Appendix 2, paragraph 6. Funding requirements resulting from the implementation of this order shall be justified and requested in accordance with existing budgetary and fiscal policies.

205. *Research.* Criteria for environmental consideration of research activities are in Appendix 1.

206. *Use of Contractors.* Contractor consulting services may be used to prepare environmental assessments, FONSIs, and impact statements. They may also be used to prepare background or supplemental material and otherwise assist in preparing a draft or final environmental document for which FAA takes responsibility.

a. *CEQ 1506.5(c)* provides that "* * * any environmental impact statement prepared pursuant to the requirements of NEPA shall be prepared directly by a contractor selected by the lead agency; or where appropriate under § 1501.6(b), a cooperating agency." Further, it is intended that "* * * the contractor by chosen solely by the lead agency, or by the lead agency in cooperation with cooperating agencies, or where appropriate by a cooperating agency to avoid any conflict of interest."

b. Under the provisions set forth above and when a determination has

been made to have a contractor prepare the environmental impact statement, the contractor shall be selected either by the FAA *or* one of the following as a joint lead agency:

(1) A State agency with statewide jurisdiction and responsibility for action per section 102(2)(d) of NEPA.

(2) A State or local agency which is subject to State or local requirements comparable to NEPA.

A cooperating agency may also select contractors. However, its roles are limited to providing information and analyses within its own area of special expertise or jurisdiction. It may obtain such data by contract under its own selection procedures. It would not be expected to select a contractor to prepare the entire FAA environmental impact statement.

c. *Contractor Preparation.* Where a contractor prepares an environmental impact statement, CEQ 1506.5(c) requires that "Contractors shall execute a disclosure statement prepared by the lead agency, or where appropriate the cooperating agency (for its portion), specifying that they have no financial or other interest in the outcome of the project." Furthermore, "* * * the responsible Federal official shall furnish guidance and participate in the preparation and shall independently evaluate the statement prior to its approval and take responsibility for its scope and contents."

207. *Role of Lead and Cooperating Agencies.* The various roles of the lead agency are described in CEQ 1501.5 through 1501.8. CEQ 1501.5 generally describes the role of the lead agency when more than one agency is involved in an action. CEQ 1501.6 describes the relationship with cooperating agencies. CEQ 1501.7 and 1501.8 define the role of the lead agency in the scoping process and in setting time limits.

a. *Federal agencies* which shall be invited by the responsible official to become cooperating agencies are those with jurisdiction by law in areas which may be affected by FAA actions or whose actions, plans, or developments may affect the proposed FAA action or limit proposed alternatives.

b. *Federal agencies* with special expertise may also be asked to be cooperating agencies.

c. *The definition of a cooperating agency* in CEQ 1508.5 includes the provision that "A State or local agency of similar qualifications (i.e., jurisdiction by law or special expertise with respect to any environmental impact involved in a proposal) or, when the effects are on a reservation, an Indian Tribe, may by agreement with the lead agency become a cooperating agency."

208. *Cumulative Impact.* In determining whether an environmental impact statement is required for a proposed Federal action, it is necessary to consider the overall cumulative impact of the proposed action and the consequences of subsequent related actions. CEQ 1508.7 states that "Cumulative impact is the impact on the environment which results from the incremental impact of the action when added to other past, present, and reasonably foreseeable future actions regardless of what agency (Federal or non-Federal) or person undertakes such other actions. Cumulative impacts can result from individually minor but collectively significant actions taking place over a period of time."

209. *Noise Analyses.* The noise effects of the proposed action and identified potential alternatives shall be analyzed using the cumulative noise measure, Day-Night Level (Ldn). Continuous contours shall be provided for each of the required conditions, showing the boundaries of all areas exposed to noise levels equal to or greater than Ldn 65. (An alternative cumulative measure may be used if required by State or local regulations or if previously used in a tiered action.)

Section 2. Preliminary Consultation

210. *Consultation.* The affected local units of Government, and pertinent Federal and State agencies identified under paragraph 202 should be consulted early in the process of preparing a DEIS, FONSI, or environmental assessment. Comments on the environmental impacts of the proposed action shall be considered, as appropriate, in determining whether the proposed action requires an EIS or FONSI and in preparing the DEIS or FONSI.

211. *Cooperating Agencies.* When, under this order, some element of the FAA is required to conduct an environmental assessment or prepare an EIS or FONSI, the FAA becomes the "Lead Agency" described in CEQ 1501.5. Under these rules, appropriate Federal agencies should be included on a cooperative basis and Federal agencies with jurisdiction by law shall be required to be cooperating agencies. They should be consulted early when their expertise is essential to an evaluation of the impacts of the proposed action.

212. *A-95 Review.* State and areawide clearinghouses shall be notified of proposed Federal actions as set forth in the Office of Management and Budget (OMB) Circular No. A-95 (Revised). The purpose of the A-95 clearinghouse process is to assure that proposed Federal projects and assisted programs are reviewed and evaluated in advance in terms of their potential impact on or conflict with statewide or areawide comprehensive planning or upon the plans and programs of local Governments. The clearinghouse routinely notifies the appropriate State and local agencies, including those agencies with expertise or jurisdiction with respect to environmental impacts. The FAA should notify State and local agencies, not notified by the clearinghouse, if necessary. The A-95 procedure should be helpful in alerting program officers and responsible officials to possible environmental controversies. Comments on the environmental effects of proposed actions shall be considered in an EIS or FONSI, and shall be attached to the DEIS when it is circulated for review.

213. *Public Hearings.*

a. The following elements are to be considered in deciding whether a public hearing is appropriate in cases where it is not statutorily mandated:

(1) The magnitude of the proposal in terms of environmental impact or controversy, economic costs, the size and location of the geographic area involved, and the uniqueness or amount of the resources to be committed;

(2) The degree of interest in the proposal, as evidenced by requests from the public or Federal, State, and local authorities that a hearing be held;

(3) The complexity of the issue and the likelihood that information presented at the hearing will be of assistance to the agency in fulfilling its responsibilities; and

(4) The extent to which public involvement already has been achieved through other means, such as earlier public hearings, meetings with citizen representatives, or written comments on the proposed action.

b. The following shall be included in the notice for a public hearing:

(1) A description of the proposed action;

(2) The scheduling of the public hearing (time, date, and place); and

(3) The availability and location of a DEIS, FONSI, or environmental assessment.

c. The notice for a public meeting shall include a description of the proposed action, scheduling of the public hearing (time, date, and place), and availability and location of a DEIS, FONSI, or environmental assessment.

d. Notice of the hearing shall be in an areawide or local newspaper of general circulation. Interested parties and clearinghouses may be notified directly.

e. A DEIS, FONSI, or environmental assessment shall be available to the

public thirty days prior to the public hearing.

f. For FAA hearings, the responsible official may assign program officers the responsibility for convening a hearing and serving as hearing officer.

g. Records of public hearing will be maintained in the docket of the General Council's office.

214. *Citizen Involvement.* Citizen involvement, where appropriate, should be initiated at the earliest practical time and continued throughout the development of the proposed project in order to obtain meaningful input. Examples of citizen groups are: Environmental, conservation, public service, education, labor, business, or aviation and airspace user organizations, and citizen advisory committees. Such citizen involvement may be appropriate in defining the scope of work of an environmental assessment developed by an applicant for aid or by a consultant, or of a DEIS being developed by FAA. Comments from individuals and groups shall be considered in preparing an EIS or FONSI. A summary of citizen involvement and the environmental issues raised shall be documented where practicable in the EIS or FONSI.

215. *Scoping.* Scoping is an important and early integral part of the EIS process. (See CEQ 1501.7.). This section provides that "There shall be an early and open process for determining the scope of issues to be addressed and for identifying the significant issues related to a proposed action. This process shall be termed scoping." The responsible official must take the lead in the scoping process, including issuance of the notice of intent, inviting the participation of other agencies, determining the issues to be analyzed in depth, and assigning responsibilities for imputs to the environmental impact statement.

a. *The first step* is described in CEQ 1501.7 as follows: "As soon as practicable after its decision to prepare an environmental impact statement and before the scoping process the lead agency shall publish a notice of intent (§ 1508.22) in the Federal Register * * *"

b. The notice of intent in CEQ 1508.22 "* * * means a notice that an environmental impact statement will be prepared and considered." The notice shall briefly:

"(1) Describe the proposed action and possible alternatives."

"(2) Describe the agency's proposed scoping process including whether, when, and where any scoping meeting will be held."

"(3) State the name and address of a person within the agency who can answer questions about the proposed action and the environmental impact statement."

c. CEQ regulations (1501.7(b)(4)) state that an agency may "hold an early scoping meeting or meetings, which may be integrated with any other early planning meetings the agency has. Such a scoping meeting will often be appropriate when the impacts of a particular action are confined to specific sites." However, there is no requirement for a scoping meeting, per se, on every project requiring an environmental impact statement. Depending on the nature and complexity of the project, some or all of the information needed during the scoping process may be obtained by letter or telephone.

d. *Delay. If for some reason there is a lengthy period between the time a decision is made to prepare an environmental impact statement and the actual preparation, CEQ 1507.3(e) provides that "* * * the notice of intent * * * may be published at a reasonable time in advance of preparation of the draft statement."*

e. *CEQ 1501.7* further provides that the lead agency shall "Determine the scope (§ 1508.25) and the significant issues to be analyzed in depth in the environmental impact statement." Scope as defined in CEQ 1508.25 "* * * consists of the range of actions, alternatives, and impacts to be considered * * *" To determine the range of actions, the problems as described in the environmental assessment should be carefully reviewed. The proposed action and any actions functionally related to it would be clearly understood. Alternatives should be reviewed in this context, identifying those which need to be rigorously explored and objectively evaluated as well as those which can be eliminated CEQ 1502.14(a). Those impact categories which fall below the threshold of significant in the environmental assessment normally do not need further study or description in the environmental impact statement. Establishing a clear definition of the Federal action, the alternatives, and the impact needing detailed study (as well as those which do not) early in the scoping process should help considerably in managing the environmental impact statement preparation process.

216.–299. [Reserved]

Chapter 3. Environmental Impact Statements and Findings of No Significant Impact

Section 1. Determination Whether an Action Is a Major Federal Action Significantly Affecting the Quality of the Human Environment

300. *Environmental Assessment.* Prior to undertaking an action which has not been categorically excluded by this order, all relevant environmental factors shall be assessed. This assessment should be performed as described in AC 00–54, Methods and Procedures for Environmental Analyses. If it is concluded that the proposed action is a major Federal action significantly affecting the quality of the human environment, the responsible official shall prepare and file an EIS. If it is concluded that the action is not a major Federal action significantly affecting the quality of the human environment, the responsible official shall prepare and file a FONSI. CEQ 1508.9 indicates that the environmental assessment is a concise document. It is FAA's intention to adhere strongly to this instruction and to require only enough analysis in the environmental assessment for the following purposes:

a. To understand the problem and identify reasonable alternative solutions, including the proposed action.

b. To determine whether any potential impacts are significant, which would trigger the environmental impact statement process.

c. To provide the basis for the FAA's finding of no significant impact if the proposed action has no significant impacts.

d. To identify and satisfy special purpose Federal laws, regulations, and executive orders.

e. To identify and satisfy state and local laws and regulations applicable to the proposal.

f. In completing the above, to indicate agencies consulted (and to identify cooperating agencies for environmental impact statement preparation purposes).

301. *Actions Requiring Environmental Impact Statements.*

a. After an environmental assessment has been prepared, an EIS shall be prepared if an FAA action:

(1) Has an effect that is not minimal on properties protected under Section 4(f) of the DOT Act, or Section 106 of the Historic Preservation Act;

(2) Has a significant impact on natural, ecological, cultural, or scenic resources of National, State, or local significance, including endangered species or wetlands, floodplains, and coastal zones;

(3) Is highly controversial with respect to the availability of adequate relocation housing. (A controversy over the amount of acquisition or relocation payments is not a controversy with respect to the availability of relocation housing.);

(4) Causes substantial division or disruption of an established community, or disrupts orderly, planned development, or is determined not to be reasonably consistent with plans or goals that have been adopted by the community in which the project is located;

(5) Causes a significant increase in surface traffic congestion;

(6) Has a significant impact on noise levels of noise sensitive areas;

(7) Has a significant impact on air quality or violates the standards for air quality of the Environmental Protection Agency or an affected locality or State;

(8) Has a significant impact on water quality or may contaminate a public water supply system;

(9) Is inconsistent with any Federal, State, or local law or adminstrative determination relating to the environment;

(10) Directly or indirectly affects human beings by creating a significant impact on the environment; and

(11) Has a significant impact on prime or unique farmlands.

b. *In determining* whether a proposed Federal action requires an EIS, not only the overall, cumulative impact of the proposed action, but also the consequences of subsequent related actions must be considered. This is important because a series of related actions may individually have a limited environmental impact. But when considered together may have a significant cumulative impact.

(1) If the action would permit further contemplated actions, the impacts of both those actions and the proposed action must be considered in determining whether to prepare an EIS.

(2) If an EIS is required, it must be processed before making a commitment which would enable the future action to foreclose or narrow the consideration of alternatives or mitigating measures. (See CEQ 1506.1.)

c. *In case of doubt* as to whether an EIS is necessary for a particular action, the responsible official or program officer should consult with the Office of Environment and Energy and the Office of Chief Counsel.

302. *Time and Length Limits.* The time and length limits appropriate to the environmental analyses of each FAA office and service are listed in the appropriate appendix. In accordance with paragraph 11 of this order, changes in the limits listed in the appendices must be coordinated with the Office of Environment and Energy and the Office of Chief Counsel.

303.–304. [*Reserved*]

Section 2. Preparation of Draft Environmental Impact Statements or Findings of No Significant Impact

305. *Timing of Draft Statement Preparation.* DEISs and FONSIs shall be prepared at the earliest practical time prior to the first significant decision point in the program or project development process.

306. *Applications.* The program officer may require each applicant for a grant, loan, permit, or other approval to which this order applies, to submit, with the original application, an environmental assessment. Regardless of the nature of participation, the responsible official or the program officer must furnish guidance, actively participate in preparing the DEIS, EIS, and FONSI, and make his own evaluation prior to approval. The responsible official shall take responsibility for the scope and content of an EIS or FONSI. The responsible offical shall appropriately limit the actions an applicant may take prior to completion and approval of EISs and subsequent approval of the application. (CEQ 1506.1.)

307. *Use of Consultants.* Contractors may prepare background or preliminary material and assist in preparing a DEIS, EIS, or FONSI for which FAA takes responsibility. (See "Agency Responsibility," CEQ 1506.5.) The program office shall conduct an independent evaluation of all analyses and information supplied by contractors. The names and qualifications of the FAA persons conducting this independent evaluation shall be included in the list of preparers.

308. *Scoping.* After it has been determined that an EIS will be required, the scoping process for the action shall be initiated, in accordance with the CEQ regulations (§§ 1501.7 and others). Scoping, however, is not required if it has been determined that an EIS is not required.

309. *Inclusion of Environmental Determinations.* EISs or FONSIs shall include relevant documentation for environmental determinations under Section 4(f) of the DOT Act and other environmental findings and determinations.

310. *Interdisciplinary Approach.* Section 102(2)(A) of NEPA requires each Federal agency to apply a systematic, interdisciplinary approach in planning and decisionmaking which may impact the environment. (See CEQ 1502.6.) To assure that all environmental impacts are identified and assessed, all relevant disciplines should be represented. If the office or service does not contain the necessary disciplines, use of professional services available in other Federal, State, or local agencies, universities, or consulting firms is appropriate. (See paragraph 206.) A listing of the preparers and their qualifications is required under paragraph 373 of this Order and sections CEQ 1502.10 and 1502.17.

311. *Internal Review Process.*

a. Draft environmental impact statements and Findings of No Significant Impact shall be reviewed by affected FAA program divisions and staff officers at the regional or office level prior to filing for public review. DOT Act section 4(f) determinations are subject to review as stated in paragraphs 331 and 340 of this order. This internal review is to assure that related foreseeable agency actions by other FAA elements are properly covered in the statement or finding and are coordinated with the appropriate action office so that commitments which are the responsibility of other divisions or offices will be carried out.

b. *Regional Directors* are responsible for designating a lead division or office to carry out this internal review.

312. *Regulations.* For regulations or rulemaking, the DEIS or FONSI should be available to reviewing agencies and the public prior to or concurrently with the notice of proposed rulemaking.

313. *Legislative Proposals.*

a. *Before the FAA submits* to the Congress a legislative proposal, the office which originates the legislation shall prepare, circulate, and file with EPA an environmental statement or prepare a FONSI.

b. *The Office of the Secretary* shall review legislative environmental statements and submit them to the Office of Management and Budget (OMB) for circulation in the normal legislative clearance process.

(1) If the scheduling of congressional hearings on legislation does not allow adequate time for the completion of an EIS, FAA shall furnish Congress and make available to the public a DEIS, pending transmittal of the comments as received, and the final text.

(2) The FAA shall forward FONSIs to the Congress, if requested.

314. *Advisory Actions.* Some Federal actions, such as airspace actions, are of an advisory nature and are neither permissive nor enabling. Actions of this type are not ordinarily major Federal actions, and environmental assessments or statements are not required as a condition for accomplishing the action. If it is known or anticipated that some subsequent Federal action would

require processing in accordance with environmental procedures, the advisory action should so indicate.

315.–319. [*Reserved*]

Section 3. Processing of Draft Environmental Impact Statements

320. *General.* Environmental impact statements shall be reviewed by affected FAA program divisions and staff officers at the regional level prior to filing or public review. This internal review is to assure that related foreseeable agency actions by other FAA elements are properly covered in the draft statement and are coordinated with the appropriate action office so that commitments which are the responsibility of other divisions or offices will be carried out. For adoption of another agency's environmental impact statement, refer to CEQ 1506.3.

321. *Public Notice.* Each responsible official shall assure that press releases, official notices, or other appropriate media announce to the public that a DEIS has been prepared and is being circulated and that comments on the environmental impact of the proposed action are being solicited. Where appropriate, notification shall be made in cooperation with the project's sponsor. The announcement shall contain information on the availability of the DEIS and should be published in a local newspaper once a week for three consecutive weeks.

322. *Copies.* The responsible official shall have printed sufficient copies of DEISs and EISs to meet anticipated demand. A fee not to exceed reproduction costs may be charged for copies requested by the public if the original set of copies is exhausted.

323. *Circulation and Availability of DEIS.*

a. *Distribution and Coordination for Intergovernmental Review.*

(1) Per CEQ 1503.1, comments on the draft environmental impact statement shall be obtained from or requested of appropriate Federal, State, and local agencies.

(2) For instructions on circulation of the summary in lieu of the full environmental impact statement, see CEQ 1502.19.

(3) All draft environmental impact statements will be coordinated with the appropriate regional offices of other Federal agencies having jurisdiction by law or special expertise, except that statements to be coordinated with any component of Department of Interior (DOI), Department of Commerce (DOC), or Department of Energy (DOE) shall be sent directly to the Washington headquarters of these departments.

b. *Circulate the DEIS* to agencies which have "jurisdiction by law or special expertise with respect to any environmental impact involved" or "which are authorized to develop and enforce environmental standards." In addition, provide copies to:

(1) EPA headquarters (5 copies), EPA region (5 copies), P–1 (2 copies), Office of Environment and Energy (1 copy), Office of Chief Counsel or designee (1 copy), the service director, other elements of DOT, and other FAA services as appropriate; U.S. Department of the Interior headquarters (12 copies; except for projects in North and South Dakota, Nebraska, Kansas, Oklahoma and Texas, 13 copies; and for the Alaska, Arizona, California, Colorado, Idaho, Montana, Nevada, New Mexico, Oregon, Utah, Washington and Wyoming, 14 copies); only for transportation proposals having major energy-related consequences, DOE (1 copy); and

(2) EPA will subsequently publish a notice in the **Federal Register** per CEQ 1506.10 which will begin the minimum 90-day period after which the Federal action can be taken.

(3) To State and local agencies, including cooperating agencies, agencies that commented substantively on the A–95 notification, affected cities and counties, and others known to have an interest in the action. The A–95 process may be used, by mutual agreement, for securing review of DEISs by State and local agencies.

c. *Availability to the Public.* The draft environmental impact statement shall be made available for public review per CEQ 1506.6.

324. *Comments on the DEIS.* CEQ 1503.3 addresses specificity of comments. If the responsible official considers that the comments received from a commenting agency have not been made in accordance with the intent of this section, consultation with that agency should be undertaken to rectify discrepancies.

CEQ 1503.3(a) states, "Comments on the environmental impact statement or on the proposed action shall be as specific as possible and may address either the adequacy of the statement or the merits of the alternatives discussed or both."

c. Comments from EPA are categorized according to the following criteria.

(1) The impact is rated by EPA as: LO (Lack of Objections), ER (Environmental Reservations), or EU (Environmentally Unsatisfactory).

(2) The statement adequacy is categorized by EPA as: 1 (Adequate), 2 (Insufficient Information), or 3 (Inadequate).

325. *Comment Periods.* A time period for comment may not be less than 45 days from publication of the notice by EPA per paragraph 323b(2). Requests for reasonable extensions of time, when warranted by the magnitude and complexity of the statement or the extent of citizen interest, shall be granted.

326.–329. [*Reserved*].

Section 4. Findings of No Significant Impact

330. *General.* CEQ 1501.4(e) provides that the Federal agency shall "Prepare a finding of no significant impact (section 1508.13), if the agency determines on the basis of the environmental assessment not to prepare a statement." The FAA will evaluate the environmental assessment to determine if any alternative which provides a good solution to the problem has no significant impacts. Unless there is an overriding reason for not selecting such an alternative, the FAA will then proceed with the preparation of a finding of no significant impact.

331. *Scope of Documentation.*

a. Depending on the complexity and degree of impact of a proposed action, a FONSI may range in content from a simple conclusion, supported with pertinent facts, that the action is not a major Federal action significantly affecting the quality of the human environment, to an analysis involving the format and content necessary for environmental statements.

b. The FONSI shall include a brief description of the proposed action and its purpose.

c. The FONSI shall assess and document all relevant matters necessary to support the conclusion that the action is not a major Federal action significantly affecting the quality of the human environment. The attention given to different environmental factors will vary according to the nature, scale, and location of the proposed action. The FONSI shall include any measures to minimize adverse impacts on the environment.

d. The FONSI shall identify and discuss the alternatives considered, particularly those which mitigate environmental impacts, including the alternative of no action.

e. The FONSI shall determine the proposed action's consistency or inconsistency with community planning, and shall document the basis for the determination.

f. If a FONSI includes a Section 4(f) determination, it shall also include the material called for in DOT Order

5610.1C. AGC, or his designee, shall review the Section 4(f) determination for legal sufficiency. The document must reflect consultation with the Department of the Interior and, where appropriate, the Department of Agriculture or the Department of Housing and Urban Development.

g. Where a Federal action affects wetlands, the FONSI shall document the opportunity for early public review, the agency's conclusion that there is no practicable alternative to the proposed action, and that the proposed action includes all practicable measures to minimize harm. The FONSI shall document the outcome of consultations with the U.S. Fish and Wildlife Service and the pertinent State resources agency.

h. Where a Federal action affects floodplains, the FONSI must reflect the agency's determination that there is no practicable alternative and the agency's efforts to minimize potential harm to or within the floodplain as a result of agency action.

i. Where affected properties are included in or eligible for inclusion in the National Register of Historic Places, the FONSI shall include documentation and outcome of consultations with the State Historic Preservation Office and evidence that the Advisory Council on Historic Preservation reviewed the determination of no adverse effect.

j. Where an action significantly affects the coastal zone in a State with an approved coastal management program, FAA shall provide the consistency determination to the State coastal agency at the earliest practicable time, but not later than 90 days prior to approval of the action (unless an alternative notification schedule is agreed to by the State). Notification may be provided using the existing A-95 process.

k. Where an action affects prime or unique farmlands, the FONSI shall document coordination with the U.S. Soil Conservation Service.

332. *Responsible officials.*

a. At the field level, FONSIs shall be reviewed by pertinent staff and program offices and may be approved by the Regional or Center Director or their designees.

b. Responsible officials shall send FONSIs originating in FAA Headquarters to Office of Environment and Energy and to Office of Chief Counsel for review. After review for legal sufficiency by the Office of the Chief Counsel, the Service or Office Director may sign the FONSI.

333. *Coordination.* Usually FONSIs are required to be coordinated outside of the FAA only where coordination is required by law or administrative directive (e.g., for Section 4(f) of the DOT Act, Section 106 of the Historic Preservation Act, Section 16(c)(4) of the Airport Act, Section 7 of the Endangered Species Act, or wetlands impact).

334. *Distribution.* A copy of the FONSI is filed in the office of the responsible official and a copy forwarded to the appropriate Service Director for review for consistency with the policy and procedures of this order. Service Directors may waive this requirement, subject to Office of Environment and Energy concurrence.

335. *Availability for Public Information.* FONSIs are public information, and shall be made available upon request pursuant to FAA procedures. Public notice of this availability shall be made quarterly through the Office of Environment and Energy. In certain limited circumstances FONSIs will be made available for public review. These circumstances include situations where the proposed action is similar to that requiring an EIS or where the proposed action is unprecedented.

336.–339. *Reserved.*

Section 5. Environmental Impact Statements

340. *General.* Each EIS shall be prepared in accordance with Attachment 2 of DOT Order 5610.1C. The format and content shall conform to the requirements of that document.

341. *List of Preparers.* CEQ 1502.17 states "The environmental impact statement shall list the names, together with their qualifications (expertise, experience, professional disciplines), of the persons who were primarily responsible for preparing the environmental impact statement or significant background papers, including basic components of the statement. Where possible the persons who are responsible for a particular analysis including analyses in background papers, shall be identified. Normally the list will not exceed two pages."

342. *Affected Environment.* CEQ 1502.15 should be followed, in particular the sentence in this section which directs that "The descriptions (of the affected environment) shall be no longer than is necessary to understand the effects of the alternatives." The Affected Environment section includes:

a. A location map, vicinity map, and airport layout plan (where appropriate).

b. Existing and planned land uses and zoning in any affected area including affected residential areas, public parks, wildlife and waterfowl refuges, wetlands and coastal zones, recreation areas, and historic facilities and archeological sites.

c. Nearby schools and places of public assembly, hospitals, shopping areas, and adjacent political jurisdictions affected by the proposed development.

d. Population, industrial and commercial growth characteristics, and assumptions used to justify the project and determine secondary impacts, if these are relevant to the proposal.

e. Any contemplated future actions, including facility installations and procedural actions which have not been included in the Alternatives section and which should be described to show their relationship to the proposal.

f. Other planned and developed activities in the affected area (e.g., highways and other transportation projects, housing development and relocation, etc.) which are interrelated to the proposal or which would produce cumulative impacts.

g. Other important background material, such as previous development and environmental actions which help to explain the present proposal. It may also include such items as bond actions, action by the community or citizen groups pertinent to the proposal, or any other unique factors associated with the project which do not properly belong in another section of the document.

343.–374. [Reserved]

Section 6. Preparation, Approval and Distribution of Final Environmental Impact Statement

375. *Utilization of Comments.*

a. *Comments received on the DEIS* and inputs (in summary form if appropriate) from citizen participation, and public hearings shall accompany the EIS through the normal internal review process.

b. *In preparing an EIS* the DEIS shall be revised, as appropriate, to reflect comments received, issues raised through the community involvement and public hearing process, or other considerations.

An appropriate response, or reference to subject's discussion in the statement shall be made. Copies of all substantive commenting letters shall be included. If the number of comments is too voluminous to include, a summary may be prepared in accordance with CEQ 1503.4(b).

c. Any unresolved environmental issues and efforts to resolve them through further consultation shall be identified and discussed. For instance, where an agency comments that the statement contains inadequate analysis or that the impacts are too adverse for approval, either the issue shall be resolved, or efforts to resolve the issue

shall be documented, and any action that will result shall be noted.

d. *Compliance with other requirements.* The final EIS should reflect that there has been compliance with the applicable environmental laws and executive orders as provided by paragraph 11b of Order DOT 5610.1C.

376. *Approval of Final Environmental Impact Statements.*

a. *For EISs which originate at headquarters,* the Office or Service Director shall send one copy each to Office of Environment and Energy and Office of General Counsel for review. After Office of General Counsel review for legal sufficiency, the Director or designee should transmit two copies to appropriate elements of OST for concurrence, if required, with a request for concurrence within 15 to 30 days, depending upon the complexity of the statement. Following concurrence, if required, the Office or Service Director may approve the EIS and file it with EPA.

b. *For EISs originating in the field,* not subject to headquarter's concurrence, the Regional Director or Center Director shall approve and file the EIS and EPA, following review for legal sufficiency by the Regional Counsel.

c. *For EISs originating in regions or centers,* but subject to headquarters concurrence, the regional director or center director shall approve the EIS and submit it to the apppropriate service or office director. The service or office director shall transmit two copies to any appropriate elements of OST for concurrence, if required, with a request for concurrence within 15 to 30 days, depending on the statement's complexity. Following concurrence, the EIS must be filed with EPA.

d. *For EISs originating in regions or centers,* but where authority to approve the EIS is retained in headquarters, the region or center shall send the proposed EIS to the appropriate service or office director. The service or office shall send copies to the Office of Environment and Energy and to the Chief Counsel for review. After Chief Counsel review for legal sufficiency, the service or office director shall transmit two copies to any appropriate element of the Office of Secretary for concurrence, if required, with a request for concurrence within 15 to 30 days, depending on the statement's complexity. Following concurrence, the EIS must be filed with EPA.

e. *All statements involving Section 4(f)* of the DOT Act are subject to Chief Counsel review for legal sufficiency in headquarters.

f. *Approval.* After appropriate internal review, a declaration approximately as follows shall be added to the summary. Signature and date blocks shall be added for the concurrence of appropriate offices and approval or disapproval of the approving official:

After careful and thorough consideration of the facts contained herein and following consideration of the views of those Federal agencies having jurisdication by law or special expertise with respect to the environmental impacts described, the undersigned finds that the proposed Federal action is consistent with existing national environmental policies and objectives as set forth in section 101(a) of the National Environmental Policy Act of 1969.

377. *DOT Concurrence.*

a. *The Assistant Secretary for Policy and International Affairs* must concur on EISs (accompanied by draft Record of Decision) for proposals in the following categories:

(1) All actions not involving airport development;

(2) Any new airport serving a metropolitan area, construed as a Standard Metropolitan Statistical Area (SMSA);

(3) Any new runway or runway extension for an airport, any part of which is located in an SMSA and is either certificated under Section 612 of the Federal Aviation Act of 1958, as amended, or used by large aircraft (except helicopters) of commercial operators;

(4) Any project to which a Federal, State, or local governmental agency has expressed opposition on environmental grounds; and

(5) Any project for which the Assistant Secretary requests an opportunity to review and concur in the final statement or for which FAA requests such review and concurrence by the Assistant Secretary.

b. For any action in paragraph 377a. involving DOT Section 4(f), concurrence is also required by the Assistant Secretary.

c. Any action for which a notice of intended referral to CEQ has been received from another agency per CEQ 1504 and the objections have not been resolved (see paragraph 381).

378. *Decisions Reserved to the Secretary.* If an action requires the personal approval of the Secretary or Deputy Secretary pursuant to a request by them or by the Assistant Secretary for Policy and International Affairs and the General Counsel, a brief memorandum requesting the Secretary's or Deputy Secretary's approval of the action shall accompany the EIS. The memorandum shall have signature lines for the concurrence of the Assistant Secretary for Policy and International Affairs, the General Counsel, and for the approval of the Secretary or Deputy Secretary, as appropriate.

379. *Availability Pending Approval.* In addition to the availability and distribution of approved final EISs, final statements proposed for approval shall normally be made available upon request in FAA offices for inspection by the public and Federal, State, or local agencies prior to final approval and filing with EPA. Such statements should carry a notation that they have not been approved and filed.

380. *Distribution of Approved Environmental Impact Statements.* The originating FAA region, center, or service shall simultaneously distribute the EIS as follows:

a. Five copies to:

Environmental Protection Agency (A-104), 401 M Street, SW., Washington, D.C. 20460.

b. Five copies to the appropriate regional office of EPA (one copy if categorized as LO-1 per paragraph 324c.).

c. One copy each to the Office of Environment and Energy and to the Service Director;

d. A copy of the EIS shall also be sent to each Federal, State, and local agency, to private organizations which made substantive comments on the draft statement and to individuals who requested a copy of the final statement or who made substantive comments on the draft. For DOI copies shall be sent to the Director, Environmental Project Review, U.S. Department of the Interior, Washington, D.C. 20240. DOI shall be sent seven copies for proposals in all states except that eight copies should be sent for proposals in North and South Dakota, Nebraska, Kansas, Oklahoma and Texas; nine for projects in Alaska, Arizona, California, Colorado, Idaho, Montana, Nevada, New Mexico, Oregon, Utah, Washington and Wyoming. For transportation proposals having major energy-related consequences, one copy should be sent to DOE headquarters.

e. One copy to any sponsor, applicant, or grantee;

f. One copy to appropriate state and areawide clearinghouses unless otherwise designated by the governor;

g. Additional copies shall be sent to accessible locations to be made available to the general public, including headquarters and regional offices; state, metropolitan, and local public libraries;

h. Pursuant to CEQ 1506.6, environmental statements, comments received, and underlying documents will be available to the public without charge to the fullest extent practical or at a reduced charge which is not more than the actual cost of reproducing copies; and

i. After filing the EIS with EPA and after expiration of the 30-day review period, the Office of Environment and Energy shall send a copy of the EIS to the DOT Library (Attn: M-491.1).

381. *Referrals to CEQ.* The Council on Environmental Quality may serve as a mediator in interagency disagreements over proposed Federal actions that might cause unsatisfactory environmental effects (see CEQ 1504).

a. If a commenting agency determines that an action is environmentally unsatisfactory, the matter may be referred to CEQ.

b. When the responsible official receives a notice of intended referral from the commenting agency, this official shall provide the Assistant Secretary with a copy of the notice and shall submit the final EIS through the Office of Environment and Energy to the Assistant Secretary for concurrence.

c. In the event of referral to CEQ by a commenting agency, the responsible official shall forward a proposed response to the Office of Environment and Energy with 10 days of referrals. The response shall address fully the issues raised in the referral and be supported by evidence. The Office of Environment and Energy shall coordinate with the Assistant Secretary and respond to CEQ within 20 days of the referral to CEQ.

382.-389. [Reserved]

Section 7. Supplemental Actions

390. *Supplemental or Amended Statements.* The responsible official may supplement or amend a DEIS or EIS when substantial changes are made in a proposed action or where signficant new information regarding its environmental impact comes to light. A supplemental or amended EIS requires Assistant Secretary concurrence if the EIS required Assistant Secretary concurrence. CEQ shall be consulted, through the Office of Environment and Energy and the Assistant Secretary, with respect to the need for, or desirability of, recirculating the statement for the appropriate period. Supplemental and amended statements do not require scoping.

391. *Implementation of Commitments in Environmental Statements.* In accordance with CEQ 1505.3, "Mitigation * * * and other conditions established in the environmental impact statement or during its review and committed as part of the decision shall be implemented by the lead agency or other appropriate consenting agency." This section of the CEQ Regulations further specifies actions which the lead agency shall take to implement environmental commitments. The FAA shall take steps as appropriate to the action, through special conditions, funding agreements, contract specifications, preferential arrival and departure procedure, directives, other project review or implementation procedures, and other appropriate follow-up actions that the agency and applicants carry out any actions to minimize adverse environmental effects set forth in the approved statement. Any proposed deviation from prescribed action that may reduce protection to the environment shall be submitted to the Office of Environment and Energy. Deviations shall be submitted to the Assistant Secretary for concurrence if the Assistant Secretary Concurred in the approved statement.

392. *Limitations on Actions.* In accordance with CEQ 1506.1, actions concerning the proposal shall not be taken until the responsible office issues the Record of Decision.

393. *Record of Decision.*

a. Following the review periods prescribed in CEQ 1506.10, the FAA decisionmaker may make a decision on the Federal action. CEQ 1505.2 requires a Record of Decision (ROD) and specifies information to be included in the record of decision. This ROD shall accompany the proposed final statement during the internal review prior to EIS approval.

b. Any mitigation measures which were made a condition of the approval of the environmental impact statement shall be included in the ROD. Proposed changes in or deletions of mitigation measures which were a condition of approval of the environmental impact statement must be reviewed by the same FAA offices which reviewed the final statement and must be approved by the environmental impact statement approving official.

c. If the responsible official wishes to take an action which was included within the range of alternatives of an approved environmental impact statement but was neither the environmentally preferable alternative or alternatives nor the agency's preferred alternative as identified in the final statement, the decisionmaker must first coordinate a draft ROD for concurrence with the same FAA offices which reviewed the final statement. These offices may concur without comment, may concur on the condition that specific mitigation measures be incorporated in the Rod, may request that a supplement to the environmental impact statement be prepared and circulated, or may nonconcur. The responsible official shall not approve the Federal action over a nonconcurrence.

d. If the alternative the responsible official wishes to take action on involves a special interest (e.g., Section 4(f) land, endangered species, wetlands, historic sites, or others), the FAA must first complete any required evaluation and consultation that has not been done, including supplementing the original environmental impact statement, prior to taking the action. Supplements to environmental impact statements shall be reviewed and approved in the same manner as the original document, and a new ROD shall be prepared and approved.

394. *Public Record.* Relevant environmental documents, comments, and responses are part of the agency's public record and shall be made available to the public through appropriate regional, office or service procedures.

395. *Use of Information.*

a. CEQ 1506.5(c) specifically provides "Nothing * * * is intended to prohibit any agency from requesting any person to submit information to it or to prohibit any person from submitting information to any agency."

b. The use of information obtained in the manner set forth above may obviate the need for extensive contractual efforts in preparing an environmental impact statement. It must be cautioned, however, that any information so received may only be used after thorough analysis and acceptability of its contents by the FAA. To the extent that the information represents a significant background paper, the names and qualifications of those persons primarily responsible for its preparation and the identification of pesons responsible for particular analyses should be listed for incorporation in the list of preparers of the environmental impact statement (see paragraph 341 of this order).

396.399. [Reserved]

Chapter 4. Additional Provisions

400. *Review of Environmental Statements Prepared by Other Agencies.* Other Federal, State or local agencies may consult FAA for assistance in analyzing environmental impacts which fall within the agency's functional area of responsibility. FAA should provide a competent, cooperative advice on proposals affecting aviation and FAA responsibilities.

a. *Comments* should be organized in a manner consistent with the structure of the draft statement and should identify alternatives or modifications that may enhance environmental quality or avoid or minimize adverse environmental impacts, and should correct inaccuracies or omissions.

b. *FAA projects* that are environmentally related to the proposed action should be identified so that interrelationships may be discussed in the final statement.

c. *Environmental monitoring* for which FAA has special expertise may be suggested and encouraged during construction, startup, or operation phases.

d. *Other agencies consulting* with FAA and requesting review of their DEIS should be advised to transmit their EISs to FAA regional offices. The following types of matters, however, should be referred to FAA headquarters for comment:

(1) Actions with national policy implications;

(2) Projects is that involve natural, ecological, cultural, scenic, historic, or park or recreation resources of national significance;

(3) Legislation or regulations having national impacts of national program proposals;

(4) Projects affecting the transportation of hazardous materials; and

(5) Water resource projects.

Comments on these projects may be prepared by regional or headquarters offices, but DOT's Research and Special Programs Administration (RSPA) and the Coast Guard (G–WS) should be consulted and referred to the Assistant Secretary.

e. *Regional offices should review* DEISs that do not have national implications. Comments should be forwarded directly to the office which the originating agency designates for receipt of comments. If the receiving office believes that another DOT office also has an interest or is in a better position to respond, it should transmit the statement to the other office. If FAA and other DOT administrations comment at the regional level, the Secretarial Representative or his designee may coordinate the comments.

f. *When appropriate,* the FAA should coordinate a response with Department offices having special expertise in the subject matter.

g. *Comments shall be submitted* within the time limits set forth in the request, unless the office responsible for submitting comments seeks and receives an extension of time. Comments should be concise, and should specify any changes desired either in the action proposed or in the environmental statement or both.

h. *Comments shall be distributed as follows:* The original and one copy to the requesting agency, one copy to the Office of Environmental and Energy, one copy to the Assistant Secretary, and one copy to the Secretarial Representative if a regional office prepared the comment. Requests by the public for copies should be referred to the agency originating the statement.

401. *Quarterly lists of environmental information.*

a. By the tenth day following the end of a calendar quarter, each region and office shall forward to the Office of Environment and Energy a list of environmental impact statements anticipated or under preparation.

b. Drop from the list EISs for which RODs have been completed.

c. List any major unresolved environmental interagency disagreements.

d. The Office of Environment and Energy shall compile these lists, transit them to EPA, and the Assistant Secretary, and make them available to the public.

402. *Emergency Action Procedures.* CEQ regulations allow modification of requirements in case of a national emergency, a disaster or similar great urgency. The processing times may be reduced or, if the emergency situation warrants, preparation and processing of a DEIS, EIS, or FONSI may be abbreviated. Such reduction in processing time should be requested from CEQ only for those projects where the need for immediate action requires processing in other than the normal manner.

403. *Application of Section 102(2)(C) Procedure to Existing Projects and Programs.* The Section 102(2)(C) procedure applies to major Federal actions having a significant effect on the environment even though they arise from projects or programs initiated prior to enactment of NEPA on January 1, 1970. In assessing the environmental effect of proceeding with such a project and in evaluating alternatives, consideration shall be given to the status of work and degree of completion. If the project or program is continued, it must, to the extent feasible, be shaped so as to enhance and restore environmental quality, avoid or minimize adverse environmental consequences, and consider environmental consequences not fully evaluated at the outset of the project or program.

404. *Land Acquisition and Construction of Facilities.* Public sponsors, other aviation agencies or private parties have the authority to acquire land or to construct facilities for operation by the FAA without prior approval by the FAA. Such action, if inconsistent with the policies of this order, could prejudice a decision by the FAA on proposed changes in an airport which would use the land thus acquired, or on request for reimbursement for the property, or construction or operation of the facility.

a. *When FAA is notified* or becomes aware of a possibility that such a situation may be occuring, FAA will advise the public sponsor, other aviation agency or private party that:

(1) Such actions must be consistent with pertinent environmental policy as expressed in this order.

(2) The manner in which the particular property was acquired or the facility constructed will be carefully considered by the FAA prior fo approval of any future FAA action involving it.

b. *FAA will give particular attention* to its responsibilities under DOT Section 4(f) to insure that a special effort is made to presrve the natural beauty of countryside, public parks, and recreation lands. wildlife and waterfowl refuges, and historic sites. FAA will not approve actions requiring the use of DOT Section 4(f) properties unless there is no feasible and prudent alternative and the program includes all possible planning to minimize harm.

c. *FAA also will give particular attention* to actions involving properties included in or eligible for inclusion in the National Register of Historic Places and the provisions of Title VI of the Civil Rights Act of 1964 and the Uniform Relocation Assistance and Real Properities Acquisition Policies Act of 1970.

d. *An action by a sponsor,* other aviation agency or private party which has acquired land or constructed a facility for operation by FAA, but without prior approval by FAA, will be reviewed to determine whether the action was consistent with the policies of this order and has not limited full and objective consideration of alternatives.

405. *Environmental Impact Statements or Findings of No Significant Impact on Requests From Foreign Sources.*

a. Requests for FAA action by a foreign government, manufacturer or operator may fall within criteria requiring preparation of an EIS or FONSI. The responsible Federal official shall coordinate such requests with the State Department through P–1. All initial FAA requests to such a foreign applicant for information which FAA needs to prepare an EIS or FONSI should be forwarded through the civil aviation authority of the applicant's government. Copies of the DEIS, EIS, and notices of any public hearings planned on the proposed action should be furnished to the applicant, the appropriate foreign civil aviation authority, and the Washington embassy

of the country in which the applicant is located.

b. Any substantial differences arising in the course of the EIS between the originating FAA reorganization and a foreign applicant should be referred to the Office of Environment and Energy, which will consult with the Associate Administrator for Policy and International Aviation Affairs to resolve any problems.

408.–499. [*Reserved*]

Appendix 1. Systems Research, Engineering and Development

1. *General.* This appendix provides guidance and assigns functional responsibilities for the conduct of environmental assessments and the preparation, coordination, executive review, and approval of environmental assessments, EISs and FONSIs which concern Research, Engineering & Development (RE&D) programs of FAA. Documentation of the environmental impact of all actions not excluded by this Order is required.

2. *Environmental Responsibilities.* Functionally responsible officials, Lead Directors of Systems Research and Development Service (ARD), Office of Systems Management (AEM), and NAFEC or their designees (i.e., Division Chief, Branch Chief, Section Chief, Manager, etc.) of offices or services will, on a case-by-case basis:

a. Determine consistent with Chapters 2 and 3 of this Order whether a proposed RE&D program action requires an EIS or FONSI; or

b. Determine if RE&D activities are excluded under paragraph 5 of this appendix;

c. Prepare, process and distribute appropriate environmental documentation according to Chapter 3 of this Order.

(1) Assure consultation with responsible and expert agencies and organizations and invite their cooperation and comment, and obtain review and approval where indicated or required.

d. Participate with other offices, services and centers in the conduct of assessments and the preparation, processing and evaluation of an EIS or FONSI for major actions involving:

(1) Development of systems with future cumulative, significant environmental impact;

(2) The inclusion into the National Airspace System of new equipment and techniques developed in RE&D programs.

e. Assure submission to AEE of quarterly list of EISs anticipated or in preparation or RE&D efforts;

f. Conduct periodic review of RE&D actions implementing this order;

g. Assure retention of documentation files by the organizational component having program or subprogram responsibility; and

h. Prepare and transmit to AEE a publicly available record which sets forth reasons for a determination that although an EIS may be required, its preparation is still premature and thus unnecessary. Such a record should be updated when significant new information becomes available.

3. *Environmental Impact Statement or Finding of No Significant Impact.* In determining whether RE&D programs and plans which have not been excluded require preparation of and assessment, EIS or FONSI, the following factors shall be considered:

a. The magnitude of Federal investment in the program;

b. The likelihood of widespread application of the technology;

c. The degree of environmental impact which would occur if the technology were widely applied; and

d. The extent to which continued investment is likely to restrict future alternatives.

4. *Actions Subject to Environmental Assessments and Procedures.* The RE&D cycle includes such activities as promulgation of directives, policies, plans, programs, budgets, legislative proposals, system design, test evaluation, specification, demonstration, etc. An environmental assessment is to be conducted and, where appropriate, an EIS or FONSI is to be prepared for implementing actions under the following programs:

a. *Air Traffic Control:*

(1) *System Program #01.*

(2) *Runways/Taxiways Program #08.*

(3) *Flight Service Station Program #13.*

(4) *Technology Program #16.*

(5) *Support Program #21.*

b. *Navigation:* (1) *Approach & Landing Systems Program #07.*

c. *Aircraft Safety:* (1) *Environmental Program #20* (Noise/Pollution/Quality).

5. *Categorically Excluded Actions.* RE&D programs excluded from the requirement for an EIS or FONSI are:

a. *Air Traffic Control* Radar Beacon System (ATCRBS) Program #03; Proximity Warning Indicator/Collision Avoidance System (PWS, CAS) Program #05; Landside/Oceanic Satellites Program #17; New Radar Systems Program #02, New Communication Systems Program #06; En Route Control Program #12, Navigation Program #04; Terminal/Tower Control Program, #14; Flow Control Program #11.

b. *Aviation Weather,* Weather Data Acquisition, Processing Criteria, Program #15;

c. *Aircraft Safety Program #18,* Anti-Hijacking, Flight Safety Criteria;

d. *Aviation Medicine Program #19,* Biomedical Aspects of Design, Personnel Efficiency and Performance;

e. *Policy Analysis,* System Analysis, System Design studies.

6. Timing of Environmental Procedures.

a. *General.* An EIS or FONSI should be prepared late enough in the development cycle to contain meaningful information but early enough for analysis of environmental effects and alternative courses of action to be significant inputs in the program decision making process.

b. *Specific.* An EIS or FONSI where required should be completed:

(1) *On or before* completion of RE&D and before introduction into the National Airspace System.

(2) *Prior to,* or with submission for comment to outside organizations of draft standards (RE&D products) or technical data packages per 9500.4; and

(3) *Prior to* submission of draft Orders, Notices, Advisory Circulars to outside organizations for comment.

7. *Mitigating Measures.* Responsible RE&D Directors, or their designees, shall specify in an EIS measures to be taken to mitigate or minimize significant adverse environmental effects. These may include:

a. Selecting alternative actions which most effectively minimize adverse impacts;

b. Conducting field tests in areas least likely to cause significant adverse environmental impact;

c. Locating laboratories and demonstration centers with a view to avoiding adverse environmental impacts; and

d. Minimizing potential adverse effects in the RE&D cycle (design, installation, test, evaluation and specific action).

Appendix 2. Airway Facilities

1. *General.* This appendix sets forth environmental procedures to be used regarding airway facilities, the categories of projects which require an EIS or FONSI, and those which are not subject to an EIS or FONSI. Airway facilities include facilities and equipment projects; the establishment of new facilities; and maintenance programs, ranging from component/equipment modification to major changes in the facilities.

2. *Environmental Responsibilities.*

a. *Regional Airway Facilities Division.* Responsible for conducting an

environmental assessment in accordance with paragraph 201, and the preparation, coordination and signing in accordance with Chapter 3 of the EIS or FONSI as appropriate for all assigned Facilities and Equipment and maintenance projects within the region. For projects where commitments to protect the environment are detailed in an EIS or FONSI, the Regional Airways Facilities Division Chief shall include the appropriate statement to implement the commitment in land acquisition or construction design documents.

b. *Airway Facilities Service.* Responsible for providing environmental guidance as follows:

(1) It shall complete EISs or FONSIs where appropriate and provide them to the regions to minimize the need for more extensive assessments.

(2) It is responsible for establishing environmental procedures and guidelines for National Airspace System programs, facilities and housing.

(3) To assist the regions in maintaining uniformity of procedures, it shall provide EIS and FONSI review and coordination.

3. *Environmental Impact Statements or FONSIs.* Environmental assessments should be developed along with economic and technical considerations in the facility siting and design. Careful consideration of the specific site and the effect of aircraft operations are necessary. Where the individual location or the operational use of the facility indicates significant environmental impact, an EIS should be prepared and circulated in accordance with this order. Those projects for which an EIS or FONSI has been filed or excluded do not require further action unless a particular case significantly affects the quality of the human environment and requires the preparation of an EIS.

4. *Projects Subject to Environmental Assessments and Procedures.* The following categories of projects are subject to an environmental assessment and preparation of an EIS or FONSI:

a. Establishment or relocation of facilities such as Air Route Traffic Control Centers (ARTCC), Airport Traffic Control Towers (ATCT), Air Route Surveillance Radars (ARSRs), Beacon Only Sites, and Flight Service Stations (FSS). These facilities may affect the environment because of land or access requirements; the electronic emissions generated by its operation; the impact on water and sewerage facilities, power distribution facilities, rainfall runoff and traffic flow from public roadways; and the impact on personnel in a given locale;

b. Establishment or relocation of facilities used for communications and en route navigation such as the VHF Omni Range (VOR) or with TACAN (VORTAC), Remote Communications Air Ground (RCAG), and Radar Microwave Links (RML). The environmental impact of these facilities normally results from providing access to the remote facility and constructing the facility itself;

c. Establishment or relocation of Instrument Landing or Microwave Landing Systems (ILS or MLS), Approach Light Systems (ALS), and Runway End Identifier Lights (REILS). these facilities may be the subject of environmental controversy because of the impact of a change in operational use and the location of certain elements of airports;

d. Establishment of FAA housing, sanitation systems, fuel storage and distribution systems, and power source and distribution systems normally should be assessed because of their location, and impact on community land use planning;

e. Environmental assessments required for the establishment of non-federal facilities, such as an ILS or TVOR, are to be accomplished by the sponsor. The regional assessments for takeover of these facilities relate to the impact of the federal operation as opposed to sponsor operation and not to the impact of the facility itself.

f. The following projects have been determined to have no significant impact on the quality of the human environment and normally do not require further environmental consideration:

(1) Installation on airports of Visual Approach Slope Indicators (VASI).

(2) Installation or replacement of engine generators or powerplants from 5 KW to 175 KW used in emergencies when commercial power fails.

(3) Installation of Runway Visual Range (RVR) equipment on airports.

(4) Construction of Single Frequency Outlets (SFO) to provide air-to-ground communication between pilots of general aviation aircraft and personnel in Flight Service Stations.

(5) Construction of Remote Transmitter/Receiver (RT/R) facilities to supplement existing communications channels installed in the Airport Traffic Control Tower or the Flight Service Station.

(6) Installation of Wind Sensing equipment, generally installed on airports.

5. *Categorically Excluded Projects.*

a. Upgrading of building electrical systems or maintenance to existing facilities (including painting, replacement of siding, etc.);

b. Minor expansion of facilities including the addition of communication channels where personnel is minimal and which require no additional land, and where expansion is due to remodeling of space in current quarters or existing buildings;

c. Upgrading of facilities to improve their operational capacity, e.g.,

(1) Existing runway approach lighting installations;

(2) Conversion of VOR to VORTAC; and

(3) Conversion of ILS to Category II or III standards;

d. Wind and other weather instruments located on airports;

e. Demolition and removal of buildings and structures, except where they are of historical, archaeological and architectural significance as officially designated by Federal, State or local government;

f. Replacement or reconstruction of a structure of facility with a new one of substantially the same size and purpose, where location will be on the same site as the existing building/facility;

g. Water, sewage, electrical, gas or other utility extension of temporary duration to serve construction;

h. New gardening or landscaping, or the maintenance of existing landscape;

i. Accessory onsite structures including storage buildings, garages, small parking areas, and signs and fences;

j. Grading on land with a slope of less than 10 percent, except where located near waterways in any wetland in an officially designated (by Federal, State, or local government agency) scenic area, or in officially mapped areas of severe geologic hazard;

k. Filling of earth into previously excavated land with material compatible with the natural features of the site;

l. Minor trenching and backfilling where the surface is restored and the excavated material is protected against wash and runoffs during the construction period;

m. Replacement of power and control cables for facilities, such as ALS, Airport Surveillance Radar (ASR), ILS and RTR;

n. Repairs and resurfacing of existing access to remote facilities such as ARSR, RCAG, RML, and VORTACs;

o. Installation of equipment on airports, such as Cloud Height Indicators (CHI) and Hygrothermometers;

p. Installation of equipment within a facility or on an airport that provides for modernization or enhancement of the

service provided by that facility, such as ASR, Radar Bright Display Equipment (RBDE) with Plan View Displays (PVD), Direct Access Radar Channel (DARC), beacon system on an existing radar and test sets.

6. *Timing of Environmental Procedures.*

a. The environmental impact of proposed projects should be considered during the budgetary process. It is not necessary that EISs or FONSIs be filed prior to budgeting for a given project. However, where significant, environmentally adverse project impacts are known or anticipated, the project justification should identify all pertinent factors to enable a determination of whether to include the project in the budget or to consider alternatives.

b. Environmental assessments should be initiated with the beginning of design or engineering effort for the project.

c. No Procurement Request for construction will be submitted to the Procurement Office for action until the EIS or FONSI, if required, has been completed and filed.

d. If the project requires acquisition of property interests, no formal contact with the property owner for the purpose of acquiring these interests, including any offer, should be made prior to filing a EIS or FONSI, except for:

(1) Emergency situations;

(2) Obtaining rights-of-entry for such purposes as preparation for site testing, obtaining data, property surveys, etc.; and

(3) Those cases where the review process indicates that the proposed site warrants further engineering study and requires an EIS. It may be in the agency's interest to obtain an option or other document to assure the availability of the property pending the filing of the EIS. In this evnt, the DEIS should state that the FAA has entered into an option and the reason for the option; that alternate sites are being considered through the EIS process; and that a decision to exercise the option will not be made until completion of the review and filing of the EIS.

7. *Site Selection.* When a site has been tentatively selected, the region should investigate such things as:

a. Impact of the facility/system on nearby residential areas.

b. Impact of grading required to accommodate the facility.

c. Impact on local land use patterns and plans.

d. Impact on wildlife in the area.

e. Impact on other variables.

Note.—The results of the analysis of the foregoing variables should be integrated with the information contained in the facility environmental discriptor, and an endorsement added to complete the EIS or FONSI as appropriate.

Appendix 3. Air Traffic

1. *General.* Air traffic personnel are involved in the assessment of aircraft noise resulting from new or revised air traffic control procedures. "Calculation of Maximum A-Weighted Sound Levels Resulting from Civil Aircraft Operations" and the Integrated Noise Model will be used to assist in determining noise impacts.

2. Environmental Responsibilities.

a. *Regional Offices.* Responsibility for environmental assessment and preparation of EISs and FONSIs may be delegated to field facilities or retained within the regional office, with assistance from the field facilities. Regional offices and field facilities shall provide input to an environmental assessment when requested by Air Traffic Service (AAT) or other services.

b. *Headquarters.* The office originating the proposed systemwide action is responsible for making environmental assessments and preparing the FONSIs or EISs. Input may be requested from regional offices and field facilities for an action originating within headquarters.

3. *Environmental Impact Statement or Finding of No Significant Impact.*

a. After completion of the environmental assessment (including noise analyses), the Responsible Offical will determine whether the proposed procedure will require an EIS or FONSI or is categorically excluded.

b. If it is determined that the proposed procedure is categorically excluded, no further action is required.

c. If the proposed procedure is determined to require EIS or FONSI, they shall be prepared in accordance with Chapters 2 and 3 of the Order.

4. *Actions Subject to Environmental Assessments and Procedures.* The following actions are subject to environmental assessment and preparation of an EIS or FONSI.

a. New or revised air traffic control procedures which routinely route air traffic over noise sensitive areas at less than 3,000 feet above the surface.

b. Special use airspace if the floor of the proposed area is below 3,000 feet above the surface or if supersonic flight is anticipated at any altitude. This airspace shall not be designated, established or modified until:

(1) The notice (NPRM or non-rule circular) contains a statement supplied by the requesting or using agency that they will serve as lead agency for purposes of compliance with NEPA;

(2) The notice contains the name and address, supplied by the requesting or using agency, of the office representing the agency to which comments on the environmental aspects can be addressed (applicable only if an EIS is to be filed by the requesting agency);

(3) The notice contains the name and address, supplied by the requesting or using agency, of the office representing the agency to which comments on any land use problems can be addressed (applicable only if special use airspace extends to the surface); and

(4) The rule, determination, or other publication of the airspace action contains a statement, supplied by the requesting agency, that the requirements of NEPA have been met.

c. The provisions of paragraph b. (1) through (4) are not applicable to special use airspace actions if minor adjustments are made such as raising the altitudes or if a change is made in the designation of the controlling or using agency.

5. *Categorically Excluded Actions.*

a. Determination under FAR Part 77, "Objects Affecting Navigable Airspace" and determinations under FAR Part 157, "Notice of Construction, Alteration, Activation and Deactivation of Airports."

b. Procedural actions to the extent covered by a previously filed EIS or FONSI in the establishment of en route or terminal navigation aids, when environmental circumstances have not changed.

c. Actions taken under FAR Part 71, "Designation of Federal Airways, area Low Routes, Controlled and REPORTING Points."

d. Actions taken under FAR Part 75, "Establishment of Jet Routes and Area High Routes"; FAR Part 99, "Security Control of Air Traffic"; FAR Part 101, "Moored Balloons, Kites, Unmanned Rockets and Unmanned Free Balloons"; and FAR Part 105, "Parachute Jumping."

e. Establishment or modification of Terminal Control Areas (TCA) or Terminal Radar Service Areas (TRSA).

f. Procedural actions dictated by emergency determinations.

6. *Timing and Length Limits of Environmental Actions.*

a. An environmental assessment should be conducted when a procedure is first proposed or coordinated. If the procedure originates within the regional office, it may be necessary to request input from field facilities. This preliminary step will help determine if an EIS or FONSI is appropriate and help identify the scope of environmental objections. If a procedure is found to be controversial, alternative courses of action should be considered or the

proposed procedure may be changed to mitigate the environmental impact, so as not to constitute a significant environmental impact.

b. EIS or FONSI action requiring public comment shall provide at least 90 days for that comment while action requiring response to or from other agencies or services will provide 45 days for response.

c. EISs shall normally be less than 150 pages and for procedures of unusual scope or complexity shall normally be less than 300 pages.

Appendix 4. Aviation Standards

1. *General.* Aviation Standards programs and project actions shall be given proper environmental consideration in accordance with the procedures and guidance contained within this order.

2. *Environmental Responsibilities.*

a. The Aviation Standards Office, staff and Division Chiefs shall implement the environmental assessment procedures, including developing an EIS or FONSI as appropriate. In the Western Region and European Region, the Chief, Aircraft Engineering Division and Chief, Aircraft Certification Staff, respectively, shall implement actions involving certification of aircraft and engines. Normally, the office (office, staff and division) responsible for the action is responsible for the environmental assessment. Office Chiefs may delegate environmental responsibility to appropriate branches or district/field offices, or they may retain the responsibility within the office with assistance from the branches or district/field offices. Regional Flight Standards Divisions shall coordinate with and assist as necessary the airway facilities, air traffic, and airports division and others on those actions involving environmental impacts crossing division lines. The headquarters divisions with assistance from the regions will develop and coordinate FONSI actions for programs.

b. Documentation, including the analysis of environmental factors, shall be retained in the project folder to substantiate the environmental assessment. This should be prepared for all projects not categorically excluded to support the decision that an EIS or FONSI will be prepared.

c. In the Washington headquarters each EIS and FONSI pertaining to a regulatory project will be prepared for the signature of the Office Director and a concurrence signature of AVS-20.

3. *Environmental Impact Statement or Finding of No Significant Impact.* Environmental considerations of Aviation Standards actions require assessment of all relevant environmental factors. A decision as to whether the action's impact requires a FONSI or EIS is based on the assessment.

4. *Actions Subject to Environmental Assessments and Procedures.* The following Aviation Standards actions are subject to environmental procedures, analysis and a decision as to whether to prepare a FONSI or EIS:

a. *Certificates.* New, amended or supplemental aircraft types for which environmental regulations do not yet exist, or new, amended or supplemental engine types for which regulations do not yet exist, or where an environmental analysis has not yet been prepared in connection with the regulatory action;

b. Aircraft/avionic maintenance bases to be operated by the FAA.

c. Regulations and rules (and exemptions and waivers to regulations and rules) which may affect the might of human environment;

d. Authorization to exceed Mach 1 Flight under FAR Part 91.55;

e. Operating specifications and amendments thereto that may significantly change the character of the operational environment of the airport. When actions cross regional boundaries, coordination among regions is expected;

f. Pilot training schools certificated under FAR Part 141 and whose anticipated operations at an airport may alter the character of the operational environment of the airport; and

g. New Instrument Approach Procedures, Departure Procedures, En Route Procedures, and Modification to currently approved instrument procedures which are conducted below 3,000 feet above the surface and which will tend to increase noise over noise sensitive areas. This requires consideration of those operations that will be routinely routed over noise sensitive areas and includes residential neighborhoods; education, health, and religious sites; and cultural, historical and recreation areas. A significant increase in noise is based on reduction of distance between aircraft and noise sensitive areas of more than 20 percent.

5. *Categorically Excluded Actions.*

a. *Certificates* for new, amended or supplemental aircraft types that meet environmental regulations or new, amended or supplemental engine types that meet emission regulations, or new, amended or supplemental engine types that have been excluded by the EPA; medical, airmen, export, manned free balloon type, glider type, propeller type, supplemental type not affecting noise, emission or waste; mechanic schools, agricultural aircraft operations, repair stations and other air agency ratings;

b. Special flight authorization controlled by operating limitations, FAR sections 21.193, 21.199, and 91.42;

c. All delegations of authority under section 314 of the FAA Act (49 U.S.C. 1301) e.g., designated examiners and engineering representatives;

d. Approvals of aircraft and engine repairs, parts and alterations not affecting noise, emissions, or wastes;

e. Aircraft and engine certifications or approvals under regulations which have been covered by prior EISs or FONSIs provided there have been no significant changes in circumstances;

f. Acoustic change actions that demonstrate compliance with FAR Part 36;

g. Operating specifications and amendments thereto which do not significantly change the character of the operational environment of the airport, including authorizing alternate use of an airport, new use of an airport, or administrative revisions to operating specifications;

h. Regulatory documents which cover administrative or procedural requirements;

i. Regulations, rules, standards, and exemptions (excluding those which if implemented may cause a significant impact on the human environment);

j. Instrument Approach Procedures, Departure Procedures, and En Route Procedures conducted at 3,000 feet or more above the surface; instrument procedures conducted below 3,000 feet above the surface which do not cause traffic to be routinely routed over noise sensitive areas; modifications to currently approved instrument procedures conducted below 3,000 feet above the surface that do not significantly increase noise over noise sensitive areas, and increases to minimum altitudes and landing minima. Noise sensitive areas may include residential neighborhoods, educational, health, and religious sites, and cultural, historical and outdoor recreational areas. A significant increase in noise is based on a reduction of distance between aircraft and noise sensitive areas of more than 20 percent.

k. Ongoing actions which are categorically excluded or actions for which FONSIs have been prepared, normally, need only documentation in the project folder that the action is not subject to further environmental consideration. However, should it be determined that a particular action in the above category has a significant impact on the quality of the human environment, an EIS will be required;

l. Denials of: (1) A petition for exemption; (2) a petition for reconsideration of a denial of exemption; (3) a petition for rulemaking; (4) a petition for reconsideration of a denial of a petition for rulemaking; (5) exemptions Technical Standard Orders (TSOs) when they are routine in nature and have no significant environmental impact.

6. *Timing of Environmental Procedures.* Environmental assessments shall be initiated along with technical, economic and operational considerations, and at the earliest practical point in time. Assessments shall be completed in a timely manner and should not become the pacing item for proposed actions. Length of assessments should be as stated in Section 1502.7 of the CEQR. The EIS or FONSI shall be filed prior to action; for example, in the case of certificates, prior to issuance.

Appendix 5. Logistics

1. *General.* Logistics programs, while basically a service function in support of agency needs or actions initiated by other FAA elements, are subject to the procedures and guidance of this order. The Logistics Service shall ensure the filing of the EIS or FONSI prior to land acquisition and construction, per Appendix 5, paragraph 4. This section delineates the responsibilities of the Office of Logistics Service (ALG) in processing proposed FAA actions and the categories of actions initiated in ALG which require an EIS or FONSI and those which are categorically excluded.

2. *Environmental Responsibilities.* Through the negotiations and procurement processing of actions proposed by agency elements, ALG is responsible for:

a. Converting commitments contained in an EIS or FONSI into contract clauses applicable to completed products, contractor's facilities, performance of services, and land acquisition documents;

b. Negotiating the cost and application of environmental requirements in contracts;

c. Assuring through inspection and review that the contractor meets environmental requirements in the contract, and administers penalty provisions as provided in applicable contract clauses;

d. Assuring that leases, loans, agreements, permits, easements, and any instrument negotiated with respect to donations, condemnations, purchases, or improvements involving real or personal property, and all utility or service contracts, conform with established environmental standards and incorporate pertinent terms relative thereto; and

e. Assuring that no solicitation or proposal for bids for construction or formal contact with property owners for the purpose of initiating negotiations to acquire land shall be made prior to filing an EIS or FONSI, except as provided in Appendix 2, paragraph 6d.

3. *Environmental Impact Statements or FONSIs.* The environmental considerations of ALG actions shall be documented in an EIS or FONSI. An environmental assessment shall be developed along with design or specifications to determine whether the action requires an EIS or FONSI. Preparation of the EIS or FONSI shall be in accordance with Chapter 3 of this order.

4. *Actions Subject to Environmental Assessments and Procedures.* The acquisition of land for the construction of new office buildings is subject to environmental procedures, assessment and a decision as to whether its impact requires an FONSI or EIS (Materiel Management Division, ALG–200 is responsible for these environmental procedures).

5. *Categorically Excluded Actions.*

a. Motor Fleet Management (purchase of new motor vehicles) where such vehicles are obtained from General Services Administration (GSA) under a lease arrangement or through a direct purchase as part of a national buy;

b. Use of space in buildings which are constructed for or controlled by GSA;

c. Lease of existing buildings;

d. Lease of space for a firm term of one years or less;

e. Acquisition of land for an existing leased operational facility.

Appendix 6. Airports

Chapter 1. Definitions

1. *Council on Environmental Quality (CEQ) Terminology.* (See paragraphs 5a and 100 of the basic Order 1050.1C. Hereinafter, references to paragraphs shall mean paragraphs in the basic order text unless specifically identified as referring to this appendix.)

2. *Federal Aviation Administration (FAA) Terms.* (See paragraph 5b.)

3. *Airports Program Environmental Definitions.* The following terms used for airport actions are in addition to those defined in CEQ 1508.

a. *Federal Action.* The Federal action as far as the Airports Program is concerned may be any of the following:

(1) Adoption of the National Airport System Plan.

(2) Approval of an airport location.

(3) Approval of an airport layout plan or revisions to an airport layout plan.

(4) Approval of funding for airport development.

(5) Requests for the conveyance of government land under section 23 of the Airport and Airway Development Act of 1970, as amended, (Airport Act) for development or improvement of a public airport.

(6) Approval of release of airport land.

b. *Federal Environmental Approval.* This is a determination by the approving official that the requirements imposed by applicable environmental statutes and regulations have been satisfied by a finding of no significant impact or a final environmental impact statement. It is not an approval of the Federal action.

c. *Finding of No Significant Impact with Section 16(c)(4) Coordination.* This is a finding of no significant impact as defined in CEQ 1508.13 which, because the project involves airport location, a major runway extension, or runway location, must be coordinated with the Department of the Interior (DOI) and the Environmental Protection Agency (EPA) in accordance with the Airport Act, section 16(c)(4).

d. *Written Reevaluation.* This is an evaluation prepared by the FAA responsible official of a draft or final impact statement or a finding of no significant impact with section 16(c)(4) coordination which has exceeded the three-year time limitation specified in paragraph 102, Chapter 10, of this appendix. This evaluation will either conclude that the contents of previously prepared environmental documents remain valid or that significant changes require the preparation of a supplement or new environmental document.

e. *Approving Official.* This is the FAA official who has the authority to approve findings of no significant impact or final environmental impact statements per Chapters 6 and 9 of this appendix.

f. *Responsible Official.* This is an FAA employee designated with overall responsibility to furnish guidance and participate in the preparation of environmental impact statements, to evaluate the satements, and to take responsibility for the scope and content of the satements. This person may be authorized to evaluate and accept environmental assessments prepared by airport sponsors and may direct scoping activities for the FAA.

g. *Decisionmaker.* This is the FAA official who has authority to approve airport layout plans, approve funding for airport development, or otherwise approve the Federal action.

h. *Sponsor.* This is any pulic agency eligible to receive Federal financial assistance under the Airport Act or anyone proposing an airport action for

which a Federal authorization is required.

i. *Major Runway Extension.* This is a runway extension which upgrades an existing runway to permit usage by noisier aircraft.

j. *Major New Construction or Expansion of Passenger Handling and Parking Facilities.* This is development on an airport to accommodate one or more increments of a planned total increase in scheduled air carrier enplanements of at least 25 percent over current enplanements. This increase shall also be at least 100,000.

k. *Design, Art, and Architectural Application.* Design is the process of arranging physical spaces, materials, and objects to perform specific functions with emphasis on the relationship of the resulting product to human and environmental factors. Design quality is judged by broader criteria than functional performance alone. Design includes architecture, landscape architecture, graphics, interior design, and engineering. Art includes objects or works of art which are placed in or on an airport facility primarily for aesthetic reasons. Architectural application means the arrangement of structural materials, landscaping, or site development to produce an aesthetically pleasing and functional environment.

1. *NEPA Section 102(2)(D) States.* Such states are those whose agencies or officials, having statewide jurisdiction and responsibility for implementing major Federal actions funded under a program of grants to states, prepare environmental impact statements required by NEPA, section 102(2)(C).

m. *"NEPA-Like" State or Local Agencies.* Such states or agencies are those which are subject to state or local requirements comparable to NEPA requirements for environmental impact statements according to CEQ 1506.2(c). Such agencies, unless specifically barred by other law, shall be joint lead agencies with the FAA and to the fullest extent possible jointly prepare environmental impact statements.

n. *Noisier Aircraft.* For purposes of this order, noisier aircraft are aircraft over 12,500 pounds which are at least three decibels louder than aircraft currently using a runway as measured at one or more of the measuring points used to determine compliance with Federal Aviation Regulations, Part 36. (an aircraft more heavily loaded than the same aircraft curently using the runway under similar conditions may be a noiser aircraft under this definition.)

o. *Project Involving Airport Location.* This is a project by a public sponsor for land acquisition or other development at an airport which has not previously been eligible for Airport Development Aid Program funds because:

(1) It did not exist, or

(2) It was privately owned.

4.–9. [Reserved]

Chapter 2. General Requirements and Responsibilities

10. *General.*

a. Airport sponsors and the FAA shall carefully consider and weigh environmental amenities and values in a timely manner in evaluating proposed Federal actions relating to airport planning and development, utilizing a systematic interdisciplinary approach and involving local and state officials and individuals having expertise. The environmental assessment and consultation process is to provide officials and decisionmakers, as well as members of the public, with an understanding of the potential environmental impacts of the proposed action. The final decision is to be made on the basis of a number of factors. Environmental considerations are to be weighed as fully and as fairly as nonenvironmental considerations. The FAA's objective is to enhance environmental quality and avoid or minimize adverse environmental impacts that might results from a proposed Federal action in a manner consistent with the FAA's principal mission to provide for the safety of aircraft operations.

b. Unless categorically excluded by this appendix, an environmental assessment and environmental impact statement or finding of no significant impact are required for proposed Federal actions related to airports. In accordance with Department of Transportation (DOT) policy and with the CEQ Regulations, it is intended that a single environmental document meet Federal, state, and local requirements.

11. *Overview of Environmental Process.*

a. The process for consideration of the environmental effects of a proposed action involves a number of steps, beginning with the airport proprietor or sponsor. The relative responsibilities of the sponsor and the FAA are summarized in the following paragraphs. Intergration of environmental considerations in early planning and involvement of the public are discussed in Chapter 5 of this appendix. Subsequent chapters present detailed instructions on content, processing, and approval of environmental documents.

b. To facilitate an understanding of the process, a flow diagram (figure 1) is presented at the end of this appendix. Figure 1 is broken down into four sheets:

(1) Sheet 1 depicits the process from identification of the problem by the sponsor, through initial review of the sponsor prepared environmental assessment, to development of the environmental assessment as an FAA document. This sheet also identifies an early decision point on whether or not the action falls in the categorical exclusion category per the listing in paragraph 23 of this appendix. If the FAA determines after initial review of the sponsor's proposal that the action is in this category, no environmental assessment is necessary.

(2) Sheet 2 begins with a key FAA determination based on the environmental assessment on whether the action requires preparation of an environmental impact statement. If this answer is yes, sheet 2 outlines the process of scoping, developing, and processing of a draft environmental impact statement by FAA through review of comments and preparation of the proposed final document.

(3) Sheet 3 describes the process if it is determined that an environmental impact statement is not necessary. In this case, it is first determined if limited Federal agency coordination is necessary pursuant to section 16(c)(4) of the Airport Act. If it is, a proposed finding of no significant impact is prepared, coordinated, and approved as indicated in the flow diagram. Otherwise, a finding of no significant impact may be prepared and approved without further coordination. A final decision on the action is then make after environmental approval.

(4) Sheet 4 is a continuation of Sheet 2. It represents the environmental and funding approval process for actions which have required the preparation of an environmental impact statement. Environmental approval action is taken in either headquarters or the region depending on approval authority as described in paragraph 95 of this appendix. A final funding decision is made subsequently and includes a record of decision incorporating assurances and mitigation measures identified in the environmental impact statement (reference paragarph 98 of this appendix). The funding decision may also be made in headquarters or the region depending on approval authority. Note that the environmental and funding approvals are not necessarily made at the same level or by the same official. These distinctions are made in the flow diagram and in the definitions in Chapter 1, paragraphs 3 e and g of this appendix.

12. *Sponsor's Responsibility.* Sponsors of airport projects are responsible for identifying the problem, developing

conceptual alternatives, and preparing an environmental assessment as more full explained in Chapter 5 of this appendix. In the Airports Program, an environmental assessment prepared by the sponsor shall systematically examine each portential impact to determine if the impact is significant. The document shall be developed in coordination with appropriate local, state, and Federal agencies, with community involvement as described in this appendix, and in direct consultation with FAA. It is important that the material contained therein be objective, complete, and accurate in order for it to serve as the basis for the preparation of the FAA's environmental documents. The sponsor's responsibility also extends to providing additional data and information to the FAA when required to assist in its review of environmental impacts and in the preparation of environmental documents. The environmental assessment shall draw upon the appropriate disciplines of the natural and social sciences and the environmental design arts.

13. *FAA Responsibility.* In brief, under the Airports Program the FAA is responsible for analyzing the environmental impacts and consequences of a proposed Federal action involving airports, for the environmetal assessment and related documents, and ultimately for approving or disapproving the environmental documents and the Federal action. Although an environmental assessment submitted by an airport sponsor may be used in whole or in part, the FAA is responsible for the facts, opinions, and judgments upon which the environmental determination is based. It is, therefore, incombent upon the FAA to assure that all documentation presents a full, accurate, and fair assessment of the environmental consequences of the proposed action.

14. *Use of Contractors.* If contractors are to be involved, see paragraph 76 of this appendix for details.

15. *Role of Lead and Cooperating Agencies.* (See paragraph 207.) More specific information on the involvement of the lead and cooperating agencies in the preparation of environmental impact statements is contained in paragraphs 74 and 75 of this appendix.

16. *Preparation of Environmental Documents.* Responsibilities and authority of state and local agencies will very depending upon the state or local requirements, jurisdictional responsibilities, and expertise. This is discussed in Chapter 7 of this appendix.

17. *Early NEPA Involvement in Planning.* In accordance with NEPA, environmental considerations shall be identified early in the planning process. Chapter 5 discusses the implementation of this requirement in airport planning.

18. *Public Involvement.* (See paragraph 214.)

19. [*Reserved*]

Chapter 3. Environmental Action Choices

20. *General.*

a. In the Airports Program, Federal actions which require environmental processing generally involve the approval of specific projects at specific airports. A series of projects may be grouped into an overall plan for development, with successive phases being contingent upon other events such as a projected increase in traffic or a change in the aircraft using the airport. Such programs for development will usually be the subject of tiered environmental actions (see paragraph 101 of this appendix and CEQ 1508.28).

b. On occasion, such as for the development of a new National Airport System Plan which is based upon new criteria for the inclusion of airports in the plan, an environmental impact statement will be prepared for a broad action. This action is the adoption of a formal plan upon which future agency actions will be based.

c. All Federal actions fall in one of three categories:

(1) Those normally requiring an environmental impact statement (CEQ 1508.11).

(2) Those requiring an environmental assessment (CEQ 1508.9).

(3) Those which are normally categorically excluded (CEQ 1508.4).

21. *Actions Normally Requiring an Environmental Impact Statement.*

a. The following Federal actions will normally require an environmental impact statement:

(1) Adoption of a new National Airport System Plan which is based upon significantly different criteria for inclusion of specific airports from criteria used in the previous plan.

(2) First time airport layout plan approval or airport location approval (see paragraphs 30 and 32 of this appendix) for an air carrier airport located in a standard metropolitan statistical area.

(3) A new runway capable of handling air carrier aircraft at an air carrier airport in a standard metropolitan statistical area.

b. Even though these actions normally require an environmental impact statement, the preparation of the environmental impact statement will usually be preceded by an environmental assessment. If the environmental assessment demonstrates that there are no significant impacts, the action shall be processed as a finding of no significant impact instead of an environmental impact statement.

22. *Actions Normally Requiring an Environmental Assessment.*

a. Federal financial participation in, or airport layout plan approval of, the following categories of development actions shall be subject to the analysis of an environmental assessment and subsequent decision as to whether to prepare an environmental impact statement or a finding of no significant impact.

(1) Airport location.

(2) New runway.

(3) Major runway extension.

(4) Runway strengthening which would permit use by a noisier aircraft than that for which the pavement was previously designed.

(5) Major new construction or expansion of passenger handling or parking facilities with Federal funding.

(6) Land acquisition associated with all the above items plus any land acquisition which causes relocation of residential or business activities or involves land covered under section 4(f) of the Department of Transportation Act of 1966, as amended (hereinafter section 4(f)).

(7) Establishment or relocation of an instrument landing system, an approach lighting system, or runway end identification lights (when airport development aid funds are used).

(8) An airport development action that falls within the scope of paragraph 24 or which involves any of the following:

(a) Use of section 4(f) land.

(b) Effect on property included in or eligible for inclusion in the National Register of Historic Places or other property of state or local historical, architectural, archeological, or cultural significance.

(c) Wetlands, coastal zones, or floodplains.

(d) Endangered or threatened species.

b. FAA requests for conveyance of government land for airport purposes under section 23 of the Airport Act (see paragraph 34 of this appendix for more detailed instructions).

c. Federal release of airport land (see paragraph 35 of this appendix).

d. The actions identified in this paragraph shall be supported through one of the following action choices based upon an environmental assessment.

(1) Environmental impact statements.

(2) Findings of no significant impact (see paragraphs 27 and 28 of this chapter).

e. Actions identified in this paragraph may be the subject of written reevaluations of previously approved environmental impact statements or findings of no significant impact. (See paragraph 103 of this appendix.)

23. *Categorical Exclusions.* Paragraphs 21 and 22 of this chapter identify specific airport actions such as major runway extensions which require, as a minimum, an environmental assessment. Paragraph 24 identifies extraordinary circumstances which create a requirement for environmental assessment of actions otherwise excluded. For any specific FAA airport project or program action, paragraphs 21, 22, 24, and 26 shall be reviewed. Unless specifically covered by those paragraphs, the following items are categorically excluded from the requirement for formal environmental assessment.

a. Runway, taxiway, apron, or loading ramp construction or repair work including extension, strengthening, reconstruction, resurfacing, marking, grooving, fillets and jet blast facilities, except where such action will create environmental impacts off airport property.

b. Installation or upgrading of airfield lighting systems, including beacons and electrical distribution systems.

c. Installation of miscellaneous items including segmented circles, wind or landing direction indicators or measuring devices, or fencing.

d. Construction or expansion of passenger handling or parking facilities including pedestrian walkway facilities.

e. Construction or repair of entrance and service roadway within airport property and relocation of these type roads except where they connect to a public highway or street.

f. Grading or removal of obstructions on airport property and erosion control actions with no off-airport impacts.

g. Landscaping generally, and landscaping or construction of physical barriers to diminish impact of airport blast and noise.

h. Land acquisition associated with any of the above items.

i. Acquisition of: noise suppression or measuring equipment, security equipment required by rule or regulation for the safety or security of personnel and property on the airport (14 CFR Part 107), safety equipment required by rule or regulation for certification of an airport (14 CFR Part 139) or snow removal equipment.

j. Issuance of airport planning grants.

k. Airport Development Aid Program actions which are tentative and conditional and clearly taken as a preliminary action to establish a sponsor's eligibility under the Program.

l. Retirement of the principal of bond or other indebtedness for terminal development.

m. Issuance of airport policy and planning documents including advisory circulars on planning, design, and development programs not intended for direct implementation or issued by FAA as administrative and technical guidance to the public.

n. Issuance of certificates and related actions under the Airport Certification Program (14 C.F.R. Part 139).

o. Advisory actions as described in paragraph 25 of this chapter.

p. Any items identified in other appendices of this order as categorical exclusions. These items are not normally included in airport actions. There may be circumstances when such items, especially those associated with airways facilities, may be shown on an airport layout plan or included in an airport development action.

24. Extraordinary Circumstances. Proposed Federal actions, normally categorically excluded, which have any of the following characteristics shall be the subject of an environmental assessment. The FAA will determine, in accordance with paragraph 51 of this appendix, whether the action will be the subject of an environmental impact statement or finding of no significant impact.

a. An action that is likely to have an effect that is not minimal on properties protected under section 106 of the Historic Preservation Act of 1966, as amended, or section 4(f).

b. An action that is likely to be highly controversial on environmental grounds. A proposed Federal action is considered highly controversial when the action is opposed by a Federal, state, or local government agency or by a substantial number of the persons affected by such action on environmental grounds. If the responsible official has any doubt whether a given number of opposing persons is "substantial," that doubt shall be resolved by discussion with APP-600 to determine if the action should be processed as a highly controversial one.

c. An action that is likely to have a significant impact on natural, ecological, cultural, or scenic resources of national, state, or local significance, including endangered species, wetlands, floodplains, coastal zones, prime or unique farmland, energy supply and natural resources, or resources protected by the Fish and Wildlife Coordination Act.

d. An action that is likely to be highly controversial with respect to the availability of adequate relocation housing. In an action involving relocation of persons or businesses, a controversy over the amount of the acquisition or relocation payments is not considered to be a controversy with respect to availability of adequate relocation housing.

e. An action that is likely to:

(1) Cause substantial division or disruption of an established community, or disrupt orderly, planned development, or is likely to be not reasonably consistent with plans or goals that have been adopted by the community in which the project is located; or

(2) Cause a significant increase in surface traffic congestion.

f. An action that is likely to:

(1) Have a significant impact on noise levels of noise sensitive areas;

(2) Have a significant impact on air quality or violate the local, state, or Federal standards for air quality;

(3) Have a significant impact on water quality or contaminate a public water supply system; or

(4) Be inconsistent with any Federal, state, or local law or administrative determination relating to the environment.

g. Other action that is likely to directly or indirectly affect human beings by creating a significant impact on the environment.

25. *Advisory Actions.* Some Federal actions, such as airspace actions, are of an advisory nature and are neither permissive nor enabling. Actions of this type are not ordinarily major Federal actions, and environmental assessments or statements are not required as a condition for accomplishing the action. If it is known or anticipated that some subsequent Federal action would require processing in accordance with environmental procedures, the FAA shall so indicate in the advisory action.

26. *Cumulative Impact.* (See paragraph 208.) For further detail on the treatment of present and related future actions, see Chapter 10 of this appendix. Also, see CEQ 1508.7 and 1508.25 for more on cumulative impacts of both related and unrelated actions.

27. *Findings of No Significant Impact Requiring Airport Act Section 16(c)(4) Coordination.*

a. This action choice occurs when the proposed action involves the location of an airport, the location of a runway, or the major extension of a runway but does not have significant impacts. A finding of no significant impact shall be supported by an environmental assessment, prepared in accordance with Chapter 5 of this appendix, substantiating the determination that the proposed action will not

significantly alter the airport's impact on its surrounding environment.

b. Pursuant to section 16(c)(4) of the Airport Act, DOI and EPA shall be consulted. The FAA shall forward a copy of the proposed finding of no significant impact (and environmental assessment) to both agencies and advise them that, although the project is not expected to significantly affect the quality of the human environment, they are being consulted pursuant to section 16(c)(4).

c. FAA processing and approval of this action choice are described in Chapter 6 of this appendix.

28. *Findings of No Significant Impact Not Requiring Section 16(c)(4) Coordination.* This action choice applies to those projects which do not have significant impacts, do not fall under section 16(c)(4) of the Airport Act, and are not categorically excluded under paragraph 23 of this appendix. Content, processing, and approval of this action choice are described in Chapter 6.

29. *Supplements.* (See paragraph 390.) The choice of preparing a supplement to a previously prepared draft of final environmental impact statement or to a finding of no significant impact with section 16(c)(4) coordination is appropriate in some instances of tiering, or when significant changes occur affecting the validity of previously prepared documents, or when significant new information is brought to light. Paragraph 104 of this appendix discusses requirements for supplements.

Chapter 4. Special Instructions

30. *Airport Layout Plan Approvals.*

a. *Applicability.* This paragraph applies to approvals of new or revised airport layout plans showing development actions identified in paragraphs 21 and 22a of this appendix. It does not affect airport layout plan approvals prior to January 1, 1970. Other paragraphs of this appendix apply to Federal participation in development actions even if shown on an airport layout plan approved prior to January 1, 1970. (See CEQ 1506.12(b).)

b. *General.* Proposals to construct new runways, runway extensions, terminal buildings, or other major and supportive development are shown on an airport layout plan. Inclusion on the plan signifies that the proposed development has been identified by public sponsors for planning purposes. It does not represent a commitment by the sponsor to implement the indicated development. FAA reviews the planned development with respect to safety, efficiency, utility, and environmental impact. FAA's approval does not represent a commitment to provide financial assistance to implement the proposed plan. Environmental documents for airport layout plan approvals are subject to tiering as explained in detail in paragraph 101b(4). Tiering results in either an unconditionally or a conditionally approved airport layout plan.

c. *Approval.*

(1) When all items of development covered by paragraphs 21 and 22a of this appendix have been the subject of environmental approvals pursuant to the provisions of this order, the airport layout plan may be approved unconditionally.

(2) When such environmental action has not been completed, the airport layout plan may be approved subject to the following condition which shall be included in the airport layout plan approval letter:

"The approval indicated by my signature is given subject to the condition that the proposed airport development identified by item herein as requiring environmental processing shall not be undertaken without prior written environmental approval by the FAA."

(3) The approval letter shall identify, by item, those items shown on the airport layout plan which are covered by paragraphs 21 and 22a which have not yet been environmentally approved by FAA.

(4) The FAA approval of an airport layout plan shall be indicated as follows:

(a) The FAA unconditional approval shall be shown on the face of the airport layout plan by use of the term "approved."

(b) The FAA conditional approval shall be shown on the face of the airport layout plan by use of the term "conditionally approved," with a cross-reference to the airport layout plan approval letter.

31. *Planning Grants.*

a. Planning grants are not considered major Federal actions for purposes of section 102(2)(C) of NEPA. Neither are planning grants considered to be airport development projects for purposes of section 16(c)(4) of the Airport Act. Therefore, a finding of no significant impact or an environmental impact statement is not required for issuance of the grant. However, environmental considerations should be included as an integral part of master planning. The airport layout plan, which is one element of a master plan, is the vehicle through which the FAA acts with respect to airport planning and which is subject to the requirements in paragraph 30 of this chapter. Environmental actions may be taken to cover either the ultimate plan as developed by the study or stages of such development, depending on the independen utility of each stage and the certain of ultimate development. Two major elements of an environmental assessment—noise and land use—are included in studies conducted under a planning grant for airport noise control and land use compatibility. See paragraph 41 of this appendix for more information on the sponsor's planning process.

b. In the context of airport development, public meetings or other planning meetings held in conjunction with master planning may expanded to incorporate some of the principles of scoping as described in paragraph 74 of this appendix, especially when it is reasonable to expect that the master plan will identify needed development which has the potential for significant environmental impacts.

32. *Airport Location Approval.* The location of new airports or existing privately owned airports is subject to the appropriate environmental approval prior to receiving first time Federal aid. If location selection is made as an intial phase of a master planning study, the environmental assessment shall take into account enough of the ultimate planned development to assure that with the best available information, the selection is based upon considerations that the need for an benefits of future development of the site outweigh any adverse environmental impacts.

33. *Land Acquisition.* Public sponsors may have the authority to acquire land adjacent to existing airports or for new airports without prior approval by the FAA. Such action could prejudice or preclude a favorable decision by the FAA on proposed changes in airport layout or development which would use the land thus acquired or on requests for reimbursement for the property. When FAA is notified or become aware of a possibility that such a situation may be occurring, FAA shall advise the public sponsor that such actions must be consistent with pertinent environmental policy as expressed in this appendix, that the manner in which the particular property was acquired will be carefully considered by the FAA prior to approval of future FAA action involving the property, and that particular attention will be given by the FAA to its responsibilities under section 4(f) to insure that a special effort is made to preserve the natural beauty of the countryside, public parks recretation lands, wildlife and waterfowl refuges, and historic sites. Particular attention shall also be given by the FAA to actions by a sponsor involving

wetlands, floodplains, coastal zones, endangered species, properties in or eligible for inclusion in the National Register of Historic Places, and the provisions of Title VI of the Civil Rights Act of 1964 and the Uniform Relocation Assistance and Real Property Acquisition Policies Act of 1970. A sponsor which has acquired land without prior approval by the FAA shall demonstrate to the satisfaction of the FAA that the acquisition was consistent with the policies expressed in this appendix and has not prejudiced full and objective consideration of alternatives or limited possible implementation of a preferable alternative.

34. *Conveyances of Land.*

a. Airport sponsors may request conveyance of government owned land under section 23 of the Airport Act for the development, improvement, or future use of a public airport. This covers land for a new airport, expansion of an existing airport, protection of aerial approaches, and future airport projects. FAA Order 5170.1, entitled Transfer of Federal Lands, Section 23, of the Airport and Airway Development Act of 1970, contains FAA's procedures for such land transfers. The sponsor shall normally be required to include with the request to FAA for the land an environmental assessment in accordance with Chapter 5 of this appendix. An environmental assessment is not required if the use of the land falls within the scope of paragrah 23 of this appendix, Categorical Exclusions. The FAA responsible official shall consult with the Federal agency controlling the land to assure that environmental documentation meets the needs of the controlling agency as well as of the FAA. If an environmental impact statement is required, the FAA may act as either joint lead agency with the controlling agency or as a cooperating agency with jurisdiction by law and may request further information from the sponsor in order to complete the analysis of significant impacts.

b. The FAA may include environmental mitigation measures as covenants in the deed or patent which transfers the land or in an Airport Development Aid Program grant agreements for a project on the land.

C. FAA Order 5170.1 instructs "Where there is other Government land adjoining that which is being requested for an airport, an easement interest should be requested as necessary to protect the airport. This involves sufficient control to clear and protect the aerial approaches to the airport, to maintain freedom from electronic interference, or smoke-producing activities, and the right to overfly any land *or any interest therein necessary to insure that such land is used only for purposes which are compatible with the noise levels of the operation of a public airport*" (Italics added). The FAA responsible official shall pay particular attention to recommending that the FAA request such additional land as allowed and as determined necessary for compatible land use.

35. *Releases of Airport Land.*

a. When a sponsor accepts a Federal airport development grant or a conveyance of Federal surplus property for airport purposes, the sponsor incurs specific obligations with respect to the uses of the property. FAA action is required to release a sponsor from obligations in the event the sponsor desire to sell the airport land. This action requires an appropriate environmental assessment in accordance with the provisions of this appendix. The assessment shall address the known and immediately foreseable environmental consequences of the release action and, as with other Federal actions regarding land, appropriate coordination with Federal, state, or local agencies shall be completed for applicable areas of environmental consideration (e.g., historic and archeologic site considerations, section 4(f) lands, wetlands and coastal zones, endangered species). In all cases, coordination with the State Historic Preservation Officer is required.

b. In making the final determination, the responsible Federal Offical shall consider the effects of covenants which will encumber the title and the extent of Federal ability to enforce these covenants subsequent to the release action. The standard conditions of release relative to the right of flight, including the right to make noise from such activity and the prohibition against erection of obstructions or other actions which would interfere with flight of aircraft over than land released, may be considered as mitigating factors in the environmental assessment especially regarding noise impacts and land use compatibility. When the intended use of released land is consistent with uses described and covered in a prior environmental assessment, the prior data and analysis may be used as input to the present assessment. When the conditions as set forth in Chapter 10 of this appendix apply, a written reevaluation may be used to support the property release.

c. In some cases, another Federal agency may be the lead agency that is responsiblie for the preparation of an environmental assessment and environmental impact statement, if required. In these circumstances, the FAA may be a cooperating agency. To support the release action, the FAA may then adopt the environmental document prepared by the other agency in accordance with the provisions of CEQ 1506.3.

d. Long term leases which are not related to aeronautical activities or airport support services (i.e., convenience concessions serving the public such as shelter, ground transportation, food and personal services) and which require the FAA's consent for the conversion of dedicated airport property to the status of revenue producing property have, for all practical purposes, the effect of a release and shall be subject to an environmental assessment. Long term leases are normally those exceeding 20 years.

36.–39. [Reserved]

Chapter 5. Early Planning, Preparation of Environmental Assessments, A–95 Review, Public Hearings

40. *Initiation of Environmental Process.* The environmental process begins at the local level with the airport sponsor. An overview of the process is discussed in paragraph 11 and a flow diagram is presented in figure 1 at the end of this appendix with the steps numbered for ease of reference. CEQ 1501.2 states "Agencies shall integrate the NEPA process with other planning at the earliest possible time to insure that planning and decisions reflect environmental values, to avoid delays later in the process, and to head off potential conflicts." At this early point in time, the sponsor may be engaged in any one of the following activities which may be expected to result in a Federal action:

a. An airport master planning study (presumably leading eventually to approval of a new or revised airport layout plan or of a grant for construction).

b. An airport site selection study.

c. A new airport layout plan or a revision.

d. Formulation of an airport development project.

e. Plans to obtain government land for airport purposes through a conveyance under section 23 of the Airport Act.

f. Plans to obtain a release of airport land.

41. *Sponsor's Planning Process.*

a. *General.* Steps 1, 2, and 3 in figure 1 indicate the minimum action expected from the sponsor to start the process. The sponsor identifies a problem and develops conceptual alternatives to solve it. These first three steps may involve a considerable amount of effort.

In the case of a master planning study, for example, problem identification would involve inventory, forecasts, demand/capacity analyses, and the determination of facility requirements. The possible alternative ways to provide the required facilities would constitute the planning alternatives. From these alternatives, the sponsor may make a choice which is identified as the proposed action. In choosing among alternatives, environmental factors play a role. CEQ 1501.2(b) states "Identify environmental effects and values in adequate detail so they can be compared to economic and technical analyses." Consequently, in developing alternatives and in choosing a proposed course of action, environmental feasibility should influence choices, as should safety, economic, and technical feasibility. The amount of environmental detail at this early planning stage should be commensurate with other planning analyses being undertaken by the sponsor and will obviously vary greatly between a comprehensive master planning study, for example, and a small development proposal. When a master planning study is done, the sponsor is encouraged to incorporate aircraft noise control land use compatibility planning and other environmental planning techniques in the study as a basis for subsequent environmental assessment. Whether it is possible at this stage for the sponsor to choose a proposed action among alternatives depends upon the type and complexity of the problem. If the identified problem is lack of sufficient airfield runway capacity or need for a new airport, the alternatives may be numerous and sufficiently complicated to preclude an obvious solution at this early stage. On the other hand, a problem such as providing additional apron space or locating a crash/fire/rescue building may be simple enough that relatively little effort is required to identify the problem, explore the relatively limited options, and choose the proposed action.

b. *Design, Art, and Architectural Application.*

(1) Design, art, and architectural considerations are applicable to airport actions involving airport location; extensive earthmoving or other disruption of the natural environment or aesthetic integrity of an area; terminal and access road development; and to any development which may affect sensitive locations such as parks, historic sites, or other public use areas. Such considerations shall be reflected in any environmental assessment prepared to the extent relevant.

(2) Applicability may best be determined by early consultation with appropriate local or state art or architecture councils or other organizations having special interest or experience in design, art, and architecture. The environmental assessment shall reflect such consultation which may be done directly or through the A-95 clearinghouse coordination.

(3) Consideration of the design arts in the preliminary design stage of project development is encouraged and shall be reflected in the environmental assessment to the extent information is available. Emphasis should be placed on design factors which will complement and support establishment of functional, efficient, and safe airport facilities while reflecting local, cultural, and architectural heritage considerations.

42. *FAA's Initial Advice and Review.* FAA personnel in regional offices and airports district offices will advise sponsors during the planning process. The locations and phone numbers of these offices are contained in Advisory Circular 150/5000-3D (or subsequent updates). The FAA's first required environmental review is indicated in step 4 of figure 1. This review has two basic objectives. The first objective is to determine whether the FAA agrees that a problem exists, that the problem has been correctly identified, and that appropriate alternative solutions have been proposed. In evaluating whether the proposal has been properly defined and whether the appropriate range of actions and alternatives is being considered, FAA will apply CEQ 1502.4 and 1508.25. If the FAA is not satisfied, further consultation with the sponsor will be undertaken to resolve areas of disagreement. The second objective of this review is to determine whether the proposed action is one of categorical exclusion. Both paragraphs 23 and 24 of this appendix shall be examined before a final determination is rendered by the FAA that a proposed action is a categorical exclusion. A categorical exclusion requires no further environmental processing, and the proposed Federal action may be approved by the FAA decisionmaker.

43. *Requirement for Environmental Assessment.* All proposed actions which are not categorical exclusions require an environmental assessment prepared by the airport sponsor. An environmental assessment is defined in CEQ 1508.9 and further elaborated on in 1501.3 and 1501.4. The completion of an environmental assessment shall normally precede the FAA's decision to prepare an environmental impact statement since the environmental assessment is a document used by the FAA to determine whether potential impacts appear to be significant. There are proposals, however, which normally require the preparation of an environmental impact statement per paragraph 21 of this appendix or on which the FAA and the sponsor agree initially that impacts will be significant. In these cases, the FAA and sponsor may determine that the scoping process should not await completion of the environmental assessment. For these proposals, the sponsor's preparation of the environmental assessment shall be done concurrently with scoping as allowed in CEQ 1501.7(b)(3). If tiering is involved, sponsors should consult Chapter 10 of this appendix and request special advice from the FAA prior to preparing an environmental assessment.

44. *FAA Role in Environmental Assessment.* The environmental assessment process is shown in steps 7 through 12 of figure 1. The FAA has responsibility in four ways:

a. Advice and assistance to the airport sponsor during the environmental assessment preparation.

b. Review of the environmental assessment (per step 8 of figure 1) to determine its adequacy for a public hearing and review pursuant to Office of Management and Budget (OMB) Circular A-95 (Revised). At this time, the FAA will insure that the cover page of the environmental assessment contains a notification that the environmental assessment has been prepared by the sponsor and that it will become a Federal document only after it is evaluated and signed on the cover page by the FAA responsible official.

c. Final review of the environmental assessment (per step 12 of figure 1) at which point the FAA independently evaluates and takes responsibility for the environmental assessment per CEQ 1506.5(b). If not satisfied with the environmental assessment, the FAA may request the sponsor to correct deficiencies and resubmit it.

d. The decision to prepare either an environmental impact statement or a finding of no significant impact (step 13 of figure 1) based on final review of the environmental assessment and completion of certain impact categories as necessary to make judgements on the significance of anticipated impacts.

45. *Early Coordination.* CEQ 1501.4(b) states, "The agency shall involve environmental agencies, applicants, and the public, to the extent practicable, in preparing [environmental] assessments * * *" and in section 1506.2(b) "Agencies shall cooperate with State and local agencies to the fullest extent

possible to reduce duplication between NEPA and State and local requirements, unless the agencies are specifically barred from doing so by some other law." The FAA encourages the sponsor to undertake early coordination with appropriate Federal, state, and local agencies, industry groups, environmental agencies, and the community in the environmental assessment process. Such coordination shall be initiated as appropriate during the sponsor's planning process and development of alternatives and continue during the preparation of the environmental assessment prior to the formal coordination during the A-95 review process. Early coordination can serve a number of purposes. It is an aid in the identification of environmental impacts and can help trigger advance planning of measures to mitigate environmental effects, including changes in project design. The community can be provided with timely information and have its opinions heard at the earliest formative stage of the project, which may avoid serious controversy later on. The amount of early coordination advisable will depend on the complexity, sensitivity, and anticipated environmental impacts of the proposal. Information received during early coordination may be used in the environmental assessment.

46. *Purposes of Environmental Assessment.* (See paragraph 300.)

47. *Format and Content of Environmental Assessment.* The environmental assessment shall incorporate some selected items of information required for an environmental impact statement in CEQ 1502.10. The information in the environmental assessment will however, be in more abbreviated form than in an environmental impact statement. Detailed information on format and content of environmental assessments is provided in separate supplemental guidance material.

48. *A-95 Review Process.* (See paragraph 212.)

49. *Public Hearing.*

a. If a new airport location, a new runway, or an extension of an existing runway is involved, the sponsor must afford the opportunity for public hearings as required by section 16(d)(1) of the Airport Act. The public hearing opportunity shall normally be afforded prior to formal submission of a sponsor's environmental assessment.

b. In deciding whether a public hearing is appropriate in other cases, the FAA and sponsor shall consider the provisions of CEQ 1506.6(c)(1) and (2).

c. In preparing for a public hearing, the sponsor is required to comply with the requirements in § 152.73 of the Federal Aviation Regulations.

50. *FAA Submission.*

a. The sponsor shall revise the environmental assessment as necessary as a result of the A-95 review, any public hearing, and other input and shall submit a completed assessment per paragraph 47 of this chapter to the FAA. The environmental assessment shall be submitted, depending upon the type of action proposed, at any time in the project formulation but not later than at submission of the sponsor's preapplication for Federal aid or the sponsor's request for either FAA approval of a new or revised airport layout plan, FAA approval of an airport location, conveyance of government lands for airport purposes under section 23 of the Airport Act, or FAA approval of a release of airport land.

b. The FAA may require corrections or additional information from the sponsor before accepting the environmental assessment. The FAA's acceptance of the environmental assessment will be indicated on the cover page by the signature of the responsible FAA official. From this point on, the environmental assessment is a Federal document for which the FAA is responsible. The number of copies of the environmental assessment submitted to the FAA shall be determined by consultation with the FAA and, for findings of no significant impact, shall include a copy designated as a reproducible master which must be of good quality.

c. If no environmental assessment is required by the FAA, such as for runway extensions which are not major runway extensions, and a public hearing is held, the sponsor shall submit a written report to the FAA which summarizes the issues raised, alternatives considered, conclusion reached, and reasons for the conclusion. The sponsor must furnish a copy of the transcript to the FAA upon request. The responsible official shall review the written report to determine whether the action should remain a categorically excluded action or whether it appears to be covered by conditions set forth in paragraph 21, 22, or 24 of this appendix.

51. *FAA Completion of Environmental Assessment and Decision.*

a. The FAA is responsible for making the judgment, based on the environmental assessment and any other known information, of whether the action choice will be an environmental impact statement or a finding of no significant impact and shall inform the sponsor of this decision.

b. If no thresholds indicating the potential for significant impact are exceeded for the proposed action, the environmental assessment, when evaluated and accepted by the FAA, will have been completed. The FAA decision will be to prepare a finding of no significant impact.

c. If some thresholds are exceeded, the environmental assessment may not have been completed when it is evaluated and accepted from the sponsor by the FAA, and the FAA may not be able to make a decision on the appropriate action choice until completing further evaluation and consultation. This situation may occur for two reasons. One is that a number of thresholds of significance may produce borderline cases which require further FAA evaluation, in consultation with appropriate officials having jurisdiction and expertise, in order to make a final judgment on whether impacts are significant. The second reason is that there are some consultations, such as the section 7(a) consultation under the Endangered Species Act Amendments or the consultation with the Advisory Council on Historic Preservation, which are required when specific categories of impacts may be of significant concern and for which the FAA rather than the sponsor must take the lead. When enough evaluation and applicable consultations have been completed by the FAA to judge for each category of impact whether the impact is significant or not, the FAA shall complete the documentation of the environmental assessment and make its decision on the action choice.

d. In order to minimize overall environmental processing time, sponsors should inform the FAA as soon as they find that their initial analysis exceeds thresholds of significance. Consultations can then be initiated without delay and advice offered on what the needs for additional information for more detailed analyses are likely to be. These further actions need not be delayed until the sponsor's final submission of the environmental assessment but can be pursued simultaneously with the environmental assessment preparation.

e. To assist in resolving uncertainties on whether impacts are significant, it may be prudent to initiate scoping prior to a firm final decision to prepare an environmental impact statement and prior to issuing a Notice of Intent per CEQ 1501.7. Scoping, under these circumstances, may eliminate from detailed study all issues as insignificant and thereby lead the responsible FAA official to determine that a finding of no significant impact is the appropriate action choice. If the FAA has announced a decision to prepare an environmental

impact statement and issued a Notice of Intent to this effect, CEQ 1501.7(c) provides the authority to revise previous determinations on the significance of impacts when applicable.

52. *Availability of Environmental Assessments.* After the FAA has evaluated and accepted the environmental assessment, this document shall be made available to the public pursuant to CEQ 1506.6.

53.–59. [*Reserved*]

Chapter 6. Finding of No Significant Impact

60. *Requirement for Finding of No Significant Impact.* (See paragraph 330.) The FAA shall evaluate the environmental assessment to determine if an alternative which provides a good solution to the problem has no significant impacts. Unless there is an overriding reason for not selecting such an alternative, the FAA shall then proceed with the preparation of a finding of no significant impact. This decision point is identified as step 13 in figure 1. The process for a finding of no significant impact is shown in steps 14 through 23 in figure 1.

61. *Special considerations.* There are several special assurances, conclusions, and findings which apply to Airport Development Aid Program projects, to projects involving the use of section 4(f) lands, to projects involving the Uniform Relocation Assistance and Real Property Acquisition Policies Act of 1970, and to other environmental areas. If any of these special assurances, conclusions, or findings apply to a proposed action, they must be based on appropriate analyses and evidence in the finding of no significant impact, although the findings themselves will not be made until the decision on the Federal action per paragraph 67c of this chapter.

62. *Format and Content.* This information is given in separate supplemental guidance material.

63. *Coordination.*

a. *General.* Appropriate Federal, state, and local coordination shall be completed as described in Chapter 5 of this appendix for applicable areas of environmental consideration. In all cases, coordination with the State Historic Preservation Officer is required. In addition, other informal coordination as may be considered prudent by the region may be carried out to satisfy the FAA regarding the extent of specific impacts. All proposed findings of no significant impact shall be reviewed by affected FAA program divisions and staff officials at the regional level before presentation for approval. Findings of no significant impact which are not section 16(c)(4) actions may be approved without headquarters level review or other formal Federal review unless such review is required under some special purpose law, regulation, or executive order. This is shown as step 15 in figure 1.

b. *Section 16(c)(4) Actions.*

(1) Section 16(c)(4) of the Airport Act requires consultation with DOI and EPA regarding the effects which a new airport, new runway, or major runway extension may have on natural resources.

(2) Copies shall be accompanied by a transmittal letter explaining the purpose of the consultation. A time limit for review of not less than 45 days after receipt of the letter shall be established after which it may be presumed that the agency consulted has no comment. Differences of opinion that develop as a result of section 16(c)(4) consultation shall be resolved at the field level to the extent possible. Unresolved issues, including objections on the adequacy of the assessment of impacts or alternatives or objections to the proposed section 16(c)(4) action, shall be identified and called to the attention of the approving official. The roles of DOI and EPA are of consultation, not concurrence, on section 16(c)(4) actions. After consultation, it is FAA's responsibility to give due consideration to the comments received and to make the decision as to whether the action should be approved as a finding of no significant impact. Reference steps 16 through 20 in figure 1.

c. *Special Circumstances.* The responsible official shall determine if the circumstances in CEQ 1501.4(e)(2) apply. The 30-day public review period may run concurrently with the Federal review for section 16(c)(4) actions.

64. *Approval.*

a. The decision to approve a finding of no significant impact may be made by the FAA approving official. In addition to the information on format and content provided in separate guidance material, the final document shall include other material which contributes to the finding, including documentation of EPA and DOI coordination for 16(c)(4) actions.

b. Section 16(c)(4) coordinations require review by the regional counsel for legal sufficiency. If a proposal involves section 4(f), the finding of no significant impact shall also be reviewed for legal sufficiency by the regional counsel (steps 19 and 20, figure 1).

c. The Federal approval shall include the following:

After careful and thorough consideration of the facts contained herein, the undersigned finds that the proposed Federal action is consistent with existing national environmental policies and objectives as set forth in section 101(a) of the National Environmental Policy Act of 1969 (NEPA) and that it will not significantly affect the quality of the human environment or otherwise include any condition requiring consultation pursuant to section 102(2)(C) of NEPA.

Approved: _____
Date: _____
Disapproved: _____
Date: _____

65. *Final Distribution.* After a finding of no significant impact/section 16(c)(4) coordination is approved, the region shall send one copy of the approved package to EPA, DOI (in Washington), CAB (for air carrier airports), and APP–600 for record purposes. (If no changes have been made since the circulation of the package, no additional copy of the circulated document need be included in the final package sent to APP–600.) Otherwise, distribution of approved findings of no significant impact outside the region is not required. However, the document shall be made available upon request per CEQ 1506.6 (step 21, figure 1).

66. *Public Availability.* CEQ 1501.4(e)(1) states "The agency shall make the finding of no significant impact available to the affected public as specified in section 1506.6." Copies of findings of no significant impact shall be provided, on request, free of charge or at a fee commensurate with the cost of reproduction (step 22, figure 1). (Also see paragraph 335.)

67. *Decision and Implementation.*

a. Immediately following the approval of a finding of no significant impact, the decision may be made on the Federal action (step 23, figure 1).

b. Mitigation measures which were made a condition of approval of the finding of no significant impact shall be included in the decision as well as the steps taken to assure appropriate commitment and follow-up of mitigation measures. Proposed changes in or deletions of mitigation measures which were a condition of approval of the finding of no significant impact must be reviewed by the same FAA offices which reviewed the original document and must be approved by the official who originally approved the finding of no significant impact.

c. A record of decision is not required for findings of no significant impact. However, prior to the Federal action and based upon the data presented in the finding of no significant impact, the decisionmaker must reach and document the appropriate conclusions, findings, or assurances. These

assurances shall be incorporated in a letter or other documentation attached to the Federal action and signed by the FAA decisionmaker.

d. If the decisionmaker wishes to take an action which was included as an alternative in the finding of no significant impact and which involves a special interest (e.g., section 4(f) land, endangered species, wetlands, historic site, or others), the FAA shall first complete any required evaluation and consultation that has not been done, supplementing the original finding of no significant impact, prior to taking the action. Supplements to findings of no significant action shall be reviewed and approved as appropriate for the type of action (i.e., whether or not pursuant to section 16(c)(4)).

e. If the alternative on which the decisionmaker now wishes to take action has potential significant impacts, the FAA shall issue a notice of intent to prepare an environmental impact statement and commence scoping.

68.–69. [*Reserved*]

Chapter 7. Environmental Impact Statement Preparation

70. *General.* This chapter and the subsequent two chapters describe the preparation, content, and processing of an environmental impact statement pursuant to section 102(2)(C) of NEPA. The process leading to a decision by FAA to prepare an environmental impact statement is described in Chapter 5 of this appendix. This chapter explains the purpose of an environmental impact statement and the manner in which it is to be prepared. It describes the scoping process, the assignment of responsibilities for input, and contracting for environmental impact statement preparation (see steps 24 through 29 in figure 1).

71. *Purpose.* The purpose of an environmental impact statement is contained in CEQ 1502.1.

72. *Implementation.*

a. To achieve the purpose in CEQ 1502.1, environmental impact statements are to be prepared in the manner prescribed in CEQ 1502.2.

b. Paragraph 310 describes the requirement for the interdisciplinary approach in preparation of environmental impact statements.

c. Other sections of the CEQ Regulations which apply generally to the preparation of environmental impact statements and their application to airport actions include sections 1502.4(a) and (b), 1502.5, and 1502.8. For airport actions, formal preparation shall normally commence with the scoping process immediately after it is determined by the FAA responsible official at the region or airports district office level that an environmental impact statement is necessary. This decision point is identified in the flow diagram (figure 1) as step 13. Nothing in this order shall preclude earlier commencement of the gathering of information and preparation for the scoping process as described in paragraph 74, below.

73. *Limitations.* CEQ 1506.1 deals with limitations on actions during the NEPA process.

74. *Scoping.*

a. The responsible official shall assume a key role in managing the preparation of an environmental impact statement. (In the context of scoping, the responsible official is the official in charge of preparation of the environmental impact statement for the lead agency. Where joint lead agencies are involved, the other agency(s) may share in the responsibility for scoping with the FAA.) Scoping is a major element. The responsible official shall take the lead in the scoping process, including issuing the notice of intent, inviting the participation of other agencies and interested persons pursuant to CEQ 1501.7 (a)(1), determining the issues to be analyzed in depth, and assigning responsibilities for inputs to the environmental impact statement. CEQ 1501.7 further describes these steps in detail.

b. Establishing a clear definition of the Federal action, the alternatives, and the impacts needing detailed study (as well as those which do not) early in the scoping process should help considerably in managing the environmental impact statement preparation process.

75. *Assigning Responsibilities.*

a. An integral part of the scoping process is the allocation of assignments for preparation of the environmental impact statement by the responsible official among the lead and cooperating agencies (step 26 in figure 1). This process is intended to assure, among other things, that applicable environmental permits, licenses, and other consultation requirements are identified in the environmental impact statement.

b. Federal agencies which shall be invited by the responsible official to be cooperating agencies are those with jurisdiction by law in areas which may be affected by airport development.

c. Federal agencies with special expertise may also be asked to be cooperating agencies.

d. If a Federal agency that is requested to be a cooperating agency replies pursuant to CEQ 1501.6(c) that it will not participate, two copies of such letter shall be sent to APP–600 which will forward one copy to the Office of the Assistant Secretary for Policy and International Affairs, P–1. A copy of the draft environmental impact statement shall be sent to such agency. If that agency has adverse comments on the draft, the matter shall be referred to APP–600 for subsequent discussion with CEQ through P–1.

76. *Contracting.*

a. Chapter 2 of this appendix describes in general the requirements and resonsibilities of the FAA and state and local agencies in meeting the requirements of NEPA and the CEQ Regulations. The degree to which state and local agencies can be involved is dependent upon whether a state agency has statewide jurisdiction or what type of state or local environmental laws or regulations exist. These distinctions are important in determining what roles agencies may play in the preparation or contracting for the preparation of an environmental impact statement as discussed below.

b. (1) State agencies with statewide jurisdiction pursuant to section 102(2)(D) of NEPA may act as joint lead agencies for the preparation of the environmental impact statement as long as the FAA furnishes guidance and participates in such preparation and independently evaluates the statement prior to its approval and adoption (reference NEPA, section 102(2)(D)(ii) and (iii). (Also, see paragraph 31 for the definition of NEPA 102(2)(D) states.)

(2) Agencies subject to state or local requirements comparable to NEPA shall be joint lead agencies (unless specifically barred by some other law) in cooperation with FAA. Such cooperation, in the words of CEQ 1506.2(c), ". . . shall to the fullest extent possible include joint environmental impact statements."

(3) State or local agencies which do not qualify as lead agencies under the conditions given in (1) and (2) above may not be lead agencies but may be cooperating agencies if they have jurisdiction by law or special expertise with respect to environmental impacts involved.

c. Paragraph 206 contains more specific instructions on use of contractors.

77. *Use of Information.*

a. CEQ 1506.5(c) specifically provides "Nothing . . . is intended to prohibit any agency from requesting any person to submit information to it or to prohibit any person from submitting information to any agency."

b. The use of information obtained in the manner set forth above may obviate the need for extensive contractual

efforts in preparing an environmental impact statement. It must be cautioned, however, that any information received from the airport sponsor or others shall be used only after evaluation and acceptance of its contents by the FAA. Further, to the extent that the information represents a significant background paper, the names and qualifications of those persons primarily responsible for its preparation together with the identification of persons responsible for particular analyses shall be listed for incorporation in the list of preparers of the environmental impact statement (see paragraph 87 in Chapter 8 of this appendix).

78. *Preparation of a Draft Environmental Impact Statement.* As a result of the scoping process, the responsible official should have a detailed analysis of the significant issues and impacts from the various cooperating agencies and others who were assigned responsibilities as described in paragraph 75 of this chapter. The responsible official's task of preparing the environmental impact statement at this point involves collating the results, conducting a detailed evaluation, and adding the necessary cover sheet, summary, etc. as may be needed to complete the document and prepare it for circulation. If a contractor has been hired to prepare the environmental impact statement, the responsible official is still required to independently evaluate the statement and be responsible for its scope and contents. When in-house expertise is insufficient to evaluate independently, it may be necessary to supplement FAA expertise with either cooperating agency or independent contractor assistance.

79. [*Reserved*]

Chapter 8. Environmental Impact Statement Contents

80. *General.* Paragraph 340 refers to Attachment 2 of DOT Order 5610.1C for information about the format and contents of environmental impact statements. Detailed information for airport actions is provided in separate supplemental material.

81.–86. [*Reserved*]

87. *List of Preparer, List of Parties to Whom Sent.*

a. CEQ 1502.17 provides information on the list of preparers to be included in an environmental impact statement.

b. A list of agencies and organizations and persons to whom copies of the statement have been sent shall also be included.

88. *Index and Appendices.*

a. An index shall be included at the end of an environmental impact statement to assist the reader and facilitate review.

b. See CEQ 1502.18 for information on appendices.

89. *Miscellanous.* CEQ 1502.21, .22, and .24 discuss in detail "Incorporation by reference," "Incomplete or unavailable information," and "Methodology and scientific accuracy," respectively. These sections should be reviewed for appropriate treatment of these instructions in an environmental impact statement.

Chapter 9. Environmental Impact Statement Processing

90. *General.*

a. This chapter applies to proposed Federal actions requiring an environmental impact statement. The process for an environmental impact statement is shown in steps 30 through 46 of figure 1.

b. For information on internal FAA review, see paragraph 320.

c. For adoption of another agency's environmental impact statement, refer to CEQ 1506.3.

91. *Distribution for Federal Review of Draft Environmental Impact Statements.* The FAA region or airports district office shall distribute the draft environmental impact statement, per steps 30 through 35 of figure 1. Five copies of the draft environmental impact statement, including the A–95 comments and the summary sheet, are to be forwarded to the Office of Airport Planning and Programming, APP–600, which shall be responsible for further distribution within the FAA and the Office of the Secretary of Transportation. For information on distribution and coordination for intergovernmental review, filing with EPA, availability to the public, and comment periods, see paragraphs 323 and 325.

92. *Comments on the Draft Environmental Impact Statement.* (See paragraph 324.)

93. *Recirculation of the Draft.* CEQ 1502.9(a) identifies when it is necessary to circulate a revised draft.

94. *Preparation and Review of Final Environmental Impact Statements.*

a. Final environmental impact statements shall be prepared in accordance with CEQ 1503.4 (step 36 in figure 1).

b. The environmental impact statement shall include evidence and required consultation to support any assurances if applicable to the Federal action. The assurances themselves will not be made until the record of decision.

c. CEQ 1504 establishes procedures for "environmental referrals" to CEQ by Federal agencies with disagreements on the environmental effects of a proposal. When a notice of intended referral has been received on an Airports Program environmental impact statement, a copy of the notice shall be forwarded to APP–600 which will advise P–1. Every effort shall be made to resolve the issues prior to processing the final environmental impact statement. Resolution of issues shall be documented in the final statement. Notification in writing to the FAA from the referring agency indicating that its objections have been resolved shall be obtained to obviate the requirement for concurrence in the final statement by P–1.

95. *Approval of Final Environmental Impact Statements.*

a. *Delegation to FAA.* Final approval authority on environmental impact statements for airport actions has been delegated to the FAA but subject to prior concurrence by the Assistant Secretary for Policy and International Affairs, P–1, for certain categories of actions. P–1 requires that a draft record of decision accompany, but not be part of, any final statement sent through that office for concurrence. This draft record of decision is for environmental review purposes only and does not constitute a review by P–1 of the Airports Program's project or funding decision. This draft record of decision shall state what the FAA's preferred alternative is, include the information specified in CEQ 1505.2 (b) and (c), indicate what environmental commitments (if any) are to be included as a condition for a favorable decision on the preferred alternative and how these will be implemented (e.g., special condition in grant agreement, property conveyance deed, plans and specifications), and incorporate proposed applicable assurances. The draft record of decision need not include project or funding information which is not relative to environmental approval. Actions requiring concurrence by the Office of the Secretary of Transportation on the final statement are identified in paragraph 377.

b. *Airports Program Approval Authority.*

(1) The Associate Administrator for Airports has final impact statement approval authority for any action in the categories specified in paragraph 377, subject to prior review for legal sufficiency by the Chief Counsel and concurrence by the Assistant Secretary for Policy and International Affairs.

(2) The Assistant Secretary may determine, after review of a draft statement, that a final statement on an action covered by paragraph 377 can be processed without prior concurrence by that office. In such case, the approval authority by the Associate

Administrator for Airports may be delegated to the region on a case-by-case basis.

(3) Those actions in (2) above for which the Associate Administrator for Airports has delegated approval authority and all other environmental impact statements may be approved by the regional director or his designee. Approval may be given after review for legal sufficiency by regional counsel and subject to prior concurrence by the Director, Office of Airport Planning and Programming, and the Chief Counsel, when such concurrence is deemed necessary upon headquarters' review of the draft statement or when requested by the regional director. All actions involving section 4(f) of the DOT Act are subject to review for legal sufficiency by Chief Counsel in headquarters (steps 37 through 45, figure 1).

c. *Headquarters Review.*

(1) When final approval of an environmental statement is retained in headquarters, the headquarters coordination is initiated when statements are received in the Office of Airport Planning and Programming. Copies are forwarded by APP-600 to the Office of the Chief Counsel for review for legal sufficiency, and then to appropriate elements of the Office of the Secretary of Transportation when required for review and concurrence, with a request for response within 15 to 30 days, depending upon the complexity of the statement. During headquarters review, the statement is revised as necessary or information added. The statement, with any comment, is then submitted to the Associate Administrator for Airports for approval (steps 38 through 41, figure 1).

(2) When approval authority is delegated to the regional director and concurrence by headquarters is requested, two copies are to be forwarded to APP-600 for action (step 44 in figure 1).

d. *Approval.* As the mechanism for approval of a final statement, a declaration approximately as follows shall be added to the summary. Signature and date blocks shall be added for the concurrence of appropriate offices and approval or disapproval of the approving official (step 41 or 45, figure 1).

"After careful and thorough consideration of the facts contained herein and following consideration of the views of those Federal agencies having jurisdiction by law or special expertise with respect to the environmental impacts described, the undersigned finds that the proposed Federal action is consistent with existing national environmental policies and objectives as set forth in section 101(a) of the National Environmental Policy Act of 1969."

96. *Notification and Distribution of Approved Final Environmental Impact Statement.*

a. *General.* Distribution by the region or airports district office of approved final statements to EPA, other agencies and organizations, and the public shall, insofar as possible, be simultaneous so as to avoid unnecessary inquiries and insure that all interested parties have a fair opportunity to review the documentation (step 46 in figure 1). If there have been only minor changes to the draft, the procedure in CEQ 1503.4(c) may be used for circulation of less than the entire document. The region shall notify APP-600 when distribution has been completed. For information on other distribution, filing with EPA, and availability to the public, see paragraph 380.

b. CEQ 1506.10(b) identifies when a final decision may be made. CEQ 1503.1(b) contains further advice relative to the final decision.

97. *Other Availability of Final Statements.* (See paragraph 379.)

98. *Decision.*

a. Following the review periods prescribed in CEQ 1506.10, the FAA decisionmaker may make a decision on the Federal action (see steps 47 through 53 of figure 1). The environmental impact statement and other environmental documents shall be included in the administrative record and made available to the decisionmaker. CEQ 1505.2 requires a record of this decision and specifies information to be included in the record of decision. CEQ 1505.2(b) states "An agency may discuss preferences among alternatives based on relevant factors including economic and technical considerations and agency statutory missions."

b. The record of decision shall include any mitigation measures which were made a condition of the approval of the environmental impact statement. Proposed changes in or deletions of mitigation measures which were a condition of approval of the environmental impact statement shall be reviewed by the same FAA offices which reviewed the final statement and must be approved by the environmental impact statement approving official.

c. If the decisionmaker wishes to take an action which was included within the range of alternatives of an approved environmental impact statement but was not the agency's preferred alternative as identified in the final statement, the decisionmaker shall first coordinate a new draft record of decision for concurrence with the same FAA and DOT offices whose concurrence was required for approval of the final statement. These offices may concur without comment, may concur on the condition that specific mitigation measures be incorporated in the record of decision, may request that a supplement to the environmental impact statement be prepared and circulated, or may nonconcur. The decisionmaker shall not approve the Federal action over a nonconcurrence.

d. If the alternative the decisionmaker now wishes to take action on involves a special interest (e.g., section 4(f) land, endangered species, wetlands, historic sites, or others), the FAA shall first complete any required evaluation and consultation that has not been done, supplementing the original environmental impact statement, prior to taking the action. Supplements to environmental impact statements shall be reviewed and approved in the same manner as the original document.

99. *Implementation of Environmental Commitments.* (See paragraph 391.)

Chapter 10. Tiering, Time Limitations, Written Reevaluations, Supplements

100. *General.* After a draft or final environmental impact statement or a finding of no significant impact has been prepared, there are circumstances which involve further environmental documentation. These are discussed in the following paragraphs.

101. *Tiering.*

a. Tiering is defined in CEQ 1508.28 and further discussed in CEQ 1500.4(i), 1502.4(d), and 1502.20.

b. In the Airports Program, tiering is most applicable in the circumstances listed below. Care must be exercised when tiering not to separate actions which are functionally related and have no independent utility.

(1) Program statements (as for new legislation or a new National Airport System Plan) followed by site specific statements as required.

(2) Environmental documents resulting from master planning covering specific short term projects, in a long term development context, to be followed at a later time when further specific projects become ripe for decision.

(3) Environmental documents for airport location approvals to be followed at a later time by specific development projects as the need develops. The subsequent environmental analysis or statement will then focus on the development which is proposed for decision and exclude from consideration the issue of airport location (including other airport sites as reasonable alternatives to the

proposed action) since this has already been decided.

(4) Environmental documents for airport layout plan approvals.

c. For instructions relative to summarizing, referencing, and making available previously tiered environmental documents, see CEQ 1502.20.

102. *Time Limitations for Environmental Documents.*

a. The time limitations below have been established for all DOT environmental impact statements. The time limitations in subparagraph (2) apply to final environmental impact statements approved after July 30, 1979, and apply effective July 30, 1982, to final statements approved prior to July 30, 1979.

(1) A draft environmental impact statement may be assumed valid for a period of three years. If the final statement is not submitted within three years from the date of the draft statement circulation, a written reevalation of the draft shall be prepared by the responsible Federal official to determine whether the consideration of alternatives, impacts, existing environment, and mitigation measures set forth in the draft statement remain applicable, accurate, and valid. If there have been changes in these factors which would be significant in the consideration of the proposal, a supplement to the draft statement or a new draft statement shall be prepared and circulated.

(2) With regard to approved final impact statements, four sets of conditions have been established:

(a) If major steps toward implementation of the proposed action (such as the start of construction, substantial acquisition, or relocation activities) have not commenced within three years from the date of approval of the final statement, a written reevaluation of the adequacy, accuracy, and validity of the final statement shall be prepared. If there have been significant changes in the proposed action, the affected environment, anticipated impacts, or proposed mitigation measures, a new or supplemental environmental impact statement shall be prepared and circulated.

(b) If the proposed action is to be implemented in stages or requires successive Federal approvals, a written reevaluation of the continued adequacy, accuracy, and validity of the final statement shall be made at each major approval point which occurs more than three years after approval of the final statement and a new supplemental statement prepared, if necessary.

(c) If major steps toward implementation of the proposed action have not occurred within the timeframe (if any) set forth in the final statement or, if no timeframe is set forth, within five years from the date of approval of the final statement, the written reevaluation required by (a) or (b) above shall be referred to the same concurring authority that concurred in the environmental impact statement.

(d) If the proposed action has been restrained or enjoined by court order or legislative process after approval of the final statement, the five-year period may be extended by the time equal to the duration of the injunction, restraining order, or legislative delay.

b. For Airports Program environmental actions, the above time limitations shall also apply to preliminary section 16(c)(4) findings of no significant impact which have been circulated to EPA and DOI and to final approved section 16(c)(4) findings of no significant impact.

103. *Written Reevaluations.* When required by paragraphs 102a(1), a(2)(a), and a(2)(b) above, the responsible official shall prepare a written reevaluation of the continued applicability, adequacy, accuracy, and validity of a draft or final impact statement. There is no requirement for a specific format or content, for coordination, or for publication of this written reevaluation. It shall include the name of the FAA responsible official and the date prepared and shall become part of the administrative record on the action. No further processing is required unless the written reevaluation indicates that a supplemental or new draft or final impact statement is necessary.

104. *Supplements.*

a. CEQ 1502.9(c) describes the circumstances which require the preparation of supplements to draft or final impact statements.

b. A change in the proposed action, in the environmental circumstances, or in the agency's decision (reference paragraph 98 of this appendix) may cause a supplement to a draft or final impact statement to be prepared soon after the original document. If a reasonable alternative which is significantly different from alternatives considered in the draft is identified, a supplement shall be prepared. A supplement is not required if the only change is the development of additional data, provided such data are not in conflict with the environmental impact statement. In other cases, a supplemental may be required because the time limitation on an environmental document has been exceeded and a written evaluation has indicated that the contents of the original document are not longer applicable, adequate, accurate or valid per paragraph 102 of this chapter.

BILLING CODE 4910-13-M

FIGURE 1. FLOW DIAGRAM OF ENVIRONMENTAL PROCESS.

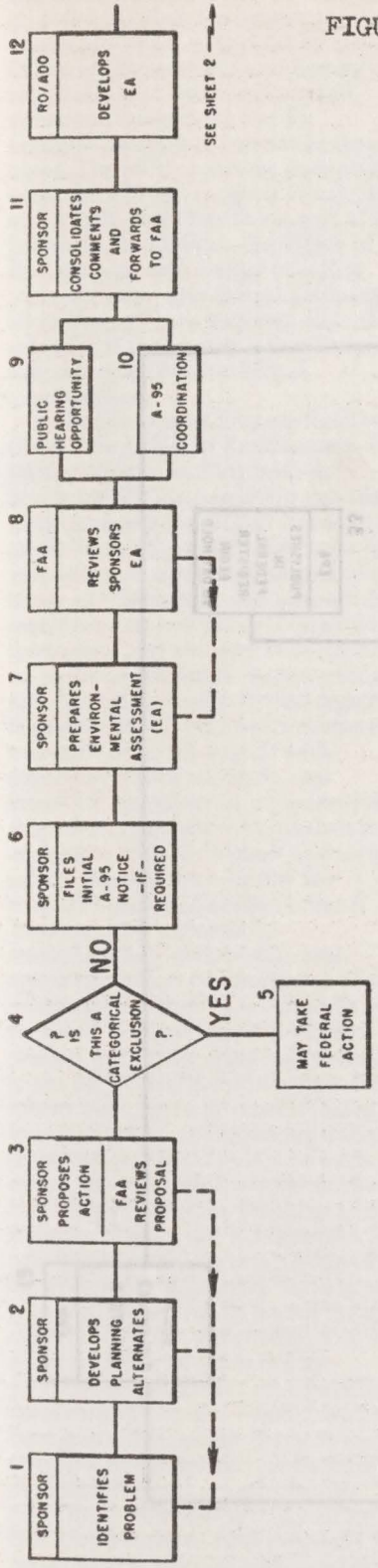

1050.1C
Appendix 6

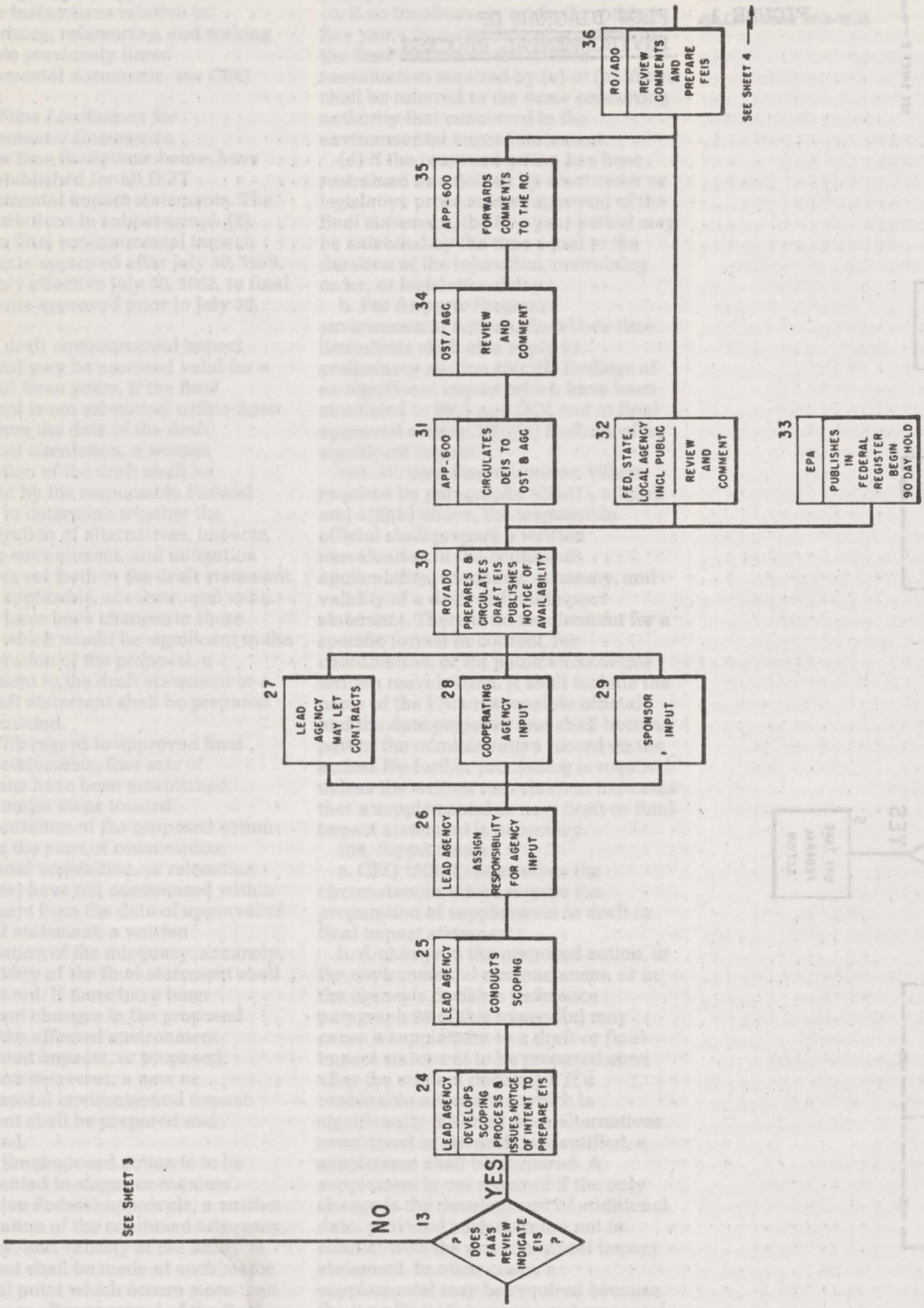

1050.1C
Appendix 6

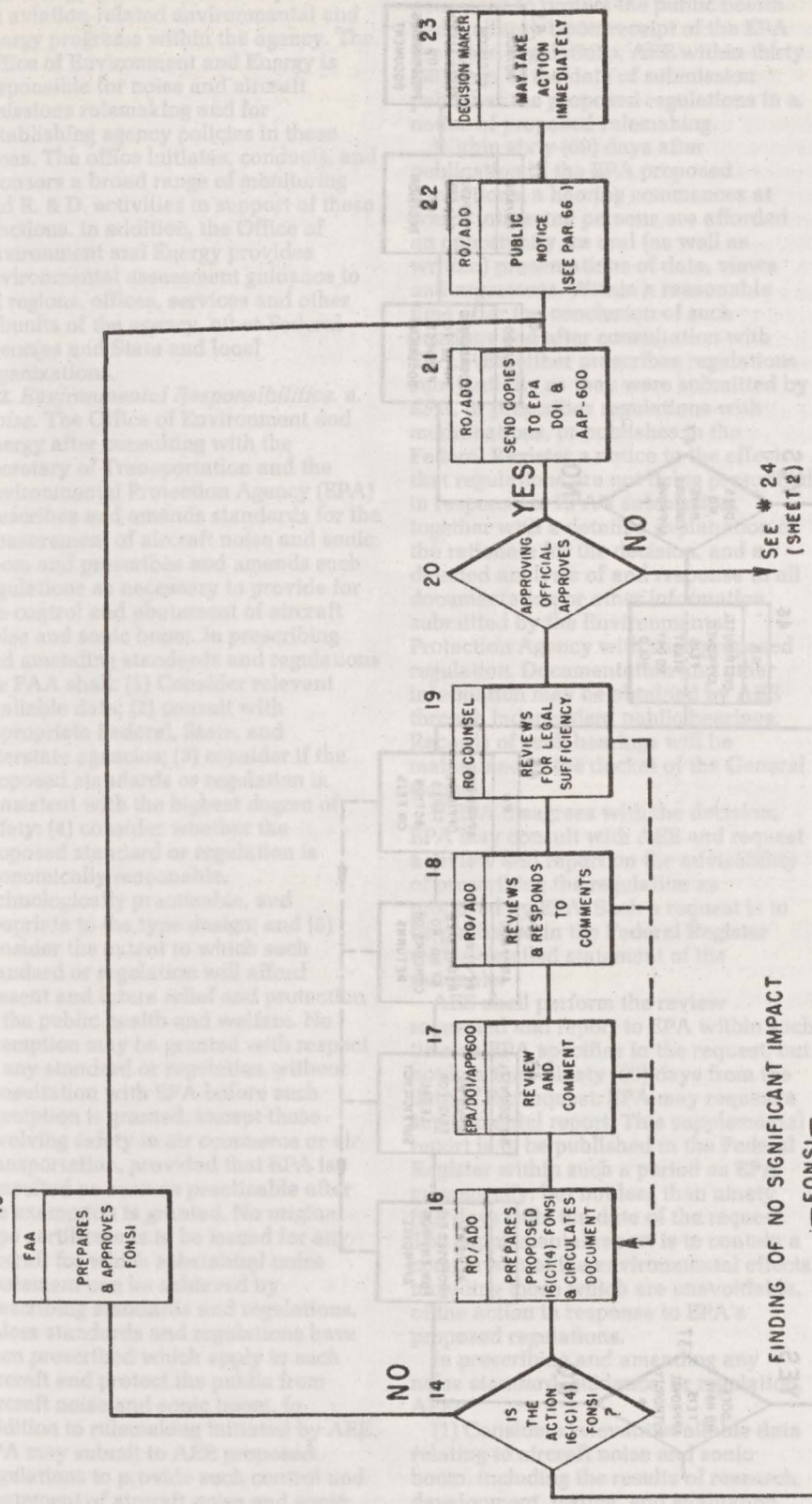

1050.1C
Appendix 6

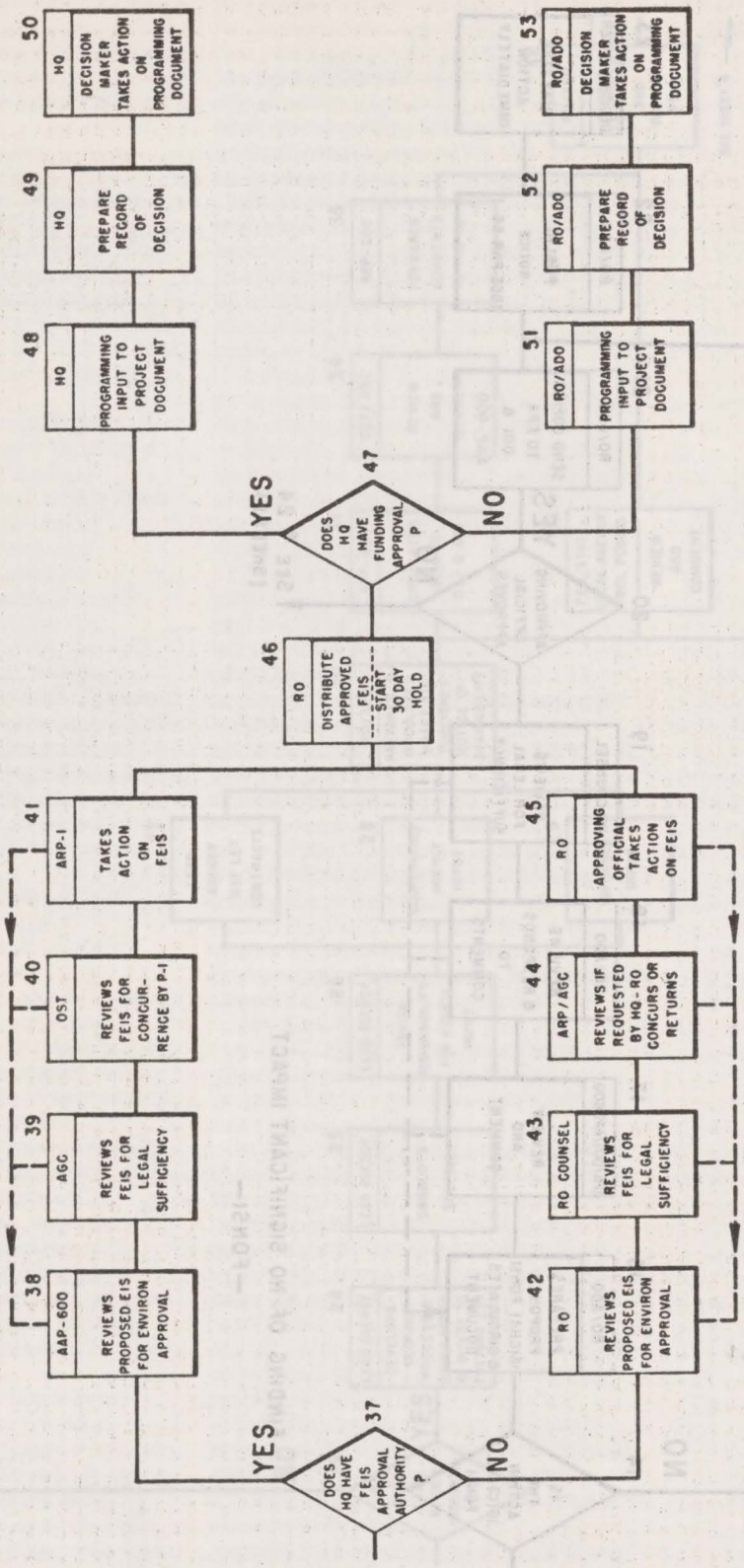

BILLING CODE 4910-13-C

Appendix 7. Environment and Energy

1. *General.* The Office of Environment and Energy (AEE) is the focal point for all aviation-related environmental and energy programs within the agency. The Office of Environment and Energy is responsible for noise and aircraft emissions rulemaking and for establishing agency policies in these areas. The office initiates, conducts, and sponsors a broad range of monitoring and R. & D. activities in support of these functions. In addition, the Office of Environment and Energy provides environmental assessment guidance to all regions, offices, services and other subunits of the agency, other Federal agencies and State and local organizations.

2. *Environmental Responsibilities.* a. *Noise.* The Office of Environment and Energy after consulting with the Secretary of Transportation and the Environmental Protection Agency (EPA) prescribes and amends standards for the measurement of aircraft noise and sonic boom and prescribes and amends such regulations as necessary to provide for the control and abatement of aircraft noise and sonic boom. In prescribing and amending standards and regulations the FAA shall: (1) Consider relevant available data; (2) consult with appropriate Federal, State, and interstate agencies; (3) consider if the proposed standards or regulation is consistent with the highest degree of safety; (4) consider whether the proposed standard or regulation is economically reasonable, technologically practicable, and apopriate to the type design; and (5) consider the extent to which such standard or regulation will afford present and future relief and protection to the public health and welfare. No exemption may be granted with respect to any standard or regulation without consultation with EPA before such exemption is granted, except those involving safety in air commerce or air transportation, provided that EPA is consulted as soon as practicable after the exemption is granted. No original type certificate is to be issued for any aircraft for which substantial noise abatement can be achieved by prescribing standards and regulations, unless standards and regulations have been prescribed which apply to such aircraft and protect the public from aircraft noise and sonic boom. In addition to rulemaking initiated by AEE, EPA may submit to AEE proposed regulations to provide such control and abatement of aircraft noise and sonic boom (including control and abatement through the exercise of any of the FAA's regulatory authority over air commerce or transportation or over aircraft or airport operations as EPA determines necessary to protect the public health and welfare). Upon receipt of the EPA proposed regulations, AEE within thirty (30) days of the date of submission publishes the proposed regulations in a notice of proposed rulemaking.

Within sixty (60) days after publication of the EPA proposed regulations, a hearing commences at which interested persons are afforded an opportunity for oral (as well as written) presentations of data, views and arguments. Within a reasonable time after the conclusion of such hearings and after consultation with EPA, AEE either prescribes regulations substantially as they were submitted by EPA, or prescribes regulations with modifications, or publishes in the **Federal Register** a notice to the effect that regulations are not being prescribed in response to EPA's submission, together with a detailed explanation of the rationale for the decision, and a detailed analysis of and response to all documentation or other information submitted by the Environmental Protection Agency with such proposed regulation. Documentation and other information may be obtained by AEE through independent public hearings. Records of such hearings will be maintained in the docket of the General Council.

If EPA disagrees with the decision, EPA may consult with AEE and request a review and report on the advisability of prescribing the regulation as proposed by EPA. Such a request is to be published in the **Federal Register** with a detailed statement of the rationale.

AEE shall perform the review requested and report to EPA within such time as EPA specifies in the request, but not less than ninety (90) days from the date of the request. EPA may request a supplemental report. This supplemental report is to be published in the **Federal Register** within such a period as EPA may specify, but not less than ninety (90) days from the date of the request. The supplemental report is to contain a comparison of the environmental effects, including those which are unavoidable, of the action in response to EPA's proposed regulations.

In prescribing and amending any noise standard, guidance, or regulation, AEE:

(1) Considers relevant available data relating to aircraft noise and sonic boom, including the results of research, development, testing, and evaluation activities conducted pursuant to the Noise Control Act and the DOT Act.

(2) Consults with such Federal, State, and interstate agencies as deemed appropriate.

(3) Considers whether any proposed standard or regulation is consistent with the highest degree of safety in commerce or air transportation in the public interest.

(4) Considers whether any proposed standard or regulation is economically reasonable, technologically practicable, and appropriate for the particular type of aircraft, aircraft engine, appliance, or certificate to which it will apply.

b. *Emissions.* Based upon study and investigation of emissions of air pollutants from aircraft to determine the extent to which such emissions affect air quality in air quality control regions throughout the United States, and to determine the technological feasibility of controlling such emissions, EPA from time to time issues proposed emission standards applicable to emissions of any air pollution from any class or classes of aircraft or aircraft engines which in their judgment causes, or contributes to, air pollution which may reasonably be anticipated to endanger the public health or welfare.

(1) EPA holds public hearings with respect to such proposed standards. Such hearings are, to the extent practicable, held in air quality control regions which are most seriously affected by aircraft emissions. Within 90 days after the issuance of such proposed regulations, EPA is supposed to issue such regulations with such modifications as they deem appropriate. Such regulations may be revised from time to time.

(2) Any regulation prescribed above (and any revision thereof) shall take effect after such period as the EPA Administrator finds necessary (after consultation with the Secretary of Transportation) to permit the development and application of the requisite technology, giving appropriate consideration to the cost of compliance within such period. The authority of the Secretary of Transportation in the area of aircraft emissions has been delegated to the FAA.

(3) Any such regulations in effect under this section on the date of enactment of the Clean Air Act Amendments of 1977 or proposed or promulgated thereafter, or amendments thereto, with respect to aircraft shall not apply if disapproved by the President, after notice and opportunity for public hearing, on the basis of a finding by the FAA that such regulation would create a hazard to aircraft safety. Any such finding shall include a reasonably specific statement of the basis upon which the finding was made.

(4) The FAA, after consultation with the EPA Administrator, shall prescribe regulations to insure compliance with all aircraft emission standards prescribed by the EPA. The FAA regulations shall include provisions making such standards applicable in the issuance, amendment, modification, suspension, or revocation of any certificate authorized by the Federal Aviation Act or the Department of Transportation Act. The FAA shall insure that all necessary inspections are accomplished, and may execute any power or duty vested in it by any other provision of law in the execution of all powers and duties concerning aircraft.

In any action to amend, modify, suspend, or revoke a certificate which violates an aircraft emission standard prescribed under the Clean Air Act, the certificate holder shall have the same notice and appeal rights as are prescribed for such holders in the Federal Aviation Act of 1958 or the Department of Transportation Act, except that in any appeal to the National Transportation Safety Board, the Board may amend, modify, or revoke the order of the Secretary of Transportation only if it finds no violation of such standard or regulation and that such amendment, modification, or revocation is consistent with safety in air transportation.

3. *Environmental Impact Statement or FONSI.* The environmental considerations of AEE actions shall be documented in an EIS or FONSI as appropriate. Decision in this regard shall be based on the criteria presented in Chapters 2 and 3 of this Order.

4. *Actions Subject to Environmental Assessments and Procedures.* The following AEE actions are subject to environmental analysis and a decision as to whether to prepare an EIS or FONSI.

a. Rules, regulations, orders, advisories, or directives which may result in significant impact on the human environment.

b. Statements of Policy, the execution of which could result in a significant impact on the human environment.

5. *Categorically Excluded Actions.* The following are excluded actions for the reasons given:

a. All FAA actions to insure compliance with the EPA aircraft emissions standards are excluded since the FAA is mandated by law to issue compliance regulations and EPA has performed all required environmental analyses prior to the issuance of their aircraft emissions standards.

6. *Timing and Length of Environmental Procedures.* Environmental assessments shall be initiated when AEE proposes or receives a proposed action which may have environmental consequences. Assessments shall be completed in a timely manner. Length of assessments should be as stated in CEQ 1502.7.

7. *Actions Subject to Appeal Rights.*

a. In any action to amend, modify, suspend, or revoke a certificate in which violation of aircraft noise or sonic boom standards or regulations is at issue, the certificate holder has appeal rights, as contained in section 609 of the FA Act of 1958, as amended.

b. In any appeal to the National Transportation Safety Board, the Board may amend, modify, or reverse the order if it finds that control or abatement of aircraft noise or sonic boom and the public health and welfare do not require the affirmation of such order, or that such order is not consistent with safety in air commerce or air transportation.

[FR Doc. 80-445 Filed 1-9-80; 8:45 am]
BILLING CODE 4910-13-M

federal register

Thursday
January 10, 1980

Part IV

Department of Energy

Office of Hearings and Appeals

Issuance of proposed decision and order

DEPARTMENT OF ENERGY

Office of Hearings and Appeals

Issuance of proposed decision and order

AGENCY: Department of Energy, Office of Hearings and Appeals.

ACTION: Notice of issuance of a proposed decision and order.

SUMMARY: The Office of Hearings and Appeals of the Department of Energy hereby gives notice of a Proposed Decision and Order issued with respect to an Application for Exception filed by the Government of the District of Columbia.

FOR FURTHER INFORMATION CONTACT: Thomas L. Wieker, Deputy Director, Office of Hearings and Appeals, Department of Energy, 2000 M Street, N.W., Washington, D.C. 20461, Telephone: (202) 254-9681.

SUPPLEMENTARY INFORMATION: On January 2, 1980, the Office of Hearings and Appeals issued a Proposed Decision and Order with respect to an Application for Exception filed by the Government of the District of Columbia on July 18, 1979 (Case No. DEE-8329). An Interim Order was also issued making the relief proposed effective immediately.

In its exception application, the District requested an increase in the monthly motor gasoline allocation of each retail service station in the District. In the Proposed Decision issued on January 2nd, the Office of Hearings and Appeals found that the extensive data collected in the exception proceeding demonstrated that the District was in fact disadvantaged by the operation of the DOE allocation regulations during the months of June and July of last year. As a result, the Office of Hearings and Appeals determined that an exception increasing the quantity of gasoline allocated to the District during those months would have been appropriate if the data had been available at that time. The Proposed Decision found that the District should be entitled to immediate exception relief in the future if the conditions which existed during June and July period should again occur.

The Proposed Decision and Order sets forth a number of specific "trigger" criteria which the District must satisfy in order to qualify for an exception. According to the Proposed Decision, the District must demonstrate that: (i) lengthy gasoline lines are present at service stations in the District; (ii) service stations in the District have substantially reduced their hours of operation; and (iii) anticipated delivery data indicate that the District will receive considerably less gasoline than the national average during the month in question, when deliveries are viewed as a percentage of deliveries during the base period month. With respect to the last criteria, the District may alternatively show that the weighted average allocation fraction of the suppliers to the District is significantly below the national average. If the District satisfies these criteria at any time during a given month, the Proposed Decision contemplates that an Order will be issued immediately increasing the quantity of gasoline delivered to the District.

Any person who wishes to contest the findings reached in the Proposed Decision and Order may file a Notice of Objection within ten days of service of the Proposed Decision. Persons who have not been served directly with the Proposed Decision shall be deemed to have been served within three days of the date of this Federal Register Notice. Any person who fails to file a timely Notice of Objection will have waived his right to challenge the Proposed Decision and Order.

The text of the Proposed Decision and the Interim Order are set forth below.

Issued in Washington, D.C., January 3, 1980.

Melvin Goldstein,
Director, Office of Hearings and Appeals.
January 2, 1980.

Proposed Decision and Order of the Department of Energy

Application for Exception

Name of Petitioner: District of Columbia.
Date of Filing: July 18, 1979.
Case Numbers: DEL-0003, DEE-8329.

On July 18, 1979, Marion S. Barry, Jr., Mayor of the District of Columbia (the District), filed an Application with the Office of Hearings and Appeals of the Department of Energy. In this Application, the District requested that the monthly motor gasoline allocation of each retail outlet within the District be increased by four percent. The District initially styled its Application as a request for a temporary exception. However, in a submission dated November 26, 1979, the District requested that we consider its petition directly as an Application for Exception.

The District's Application involves amendments to the Mandatory Petroleum Allocation Regulations that the Economic Regulatory Administration of the Department of Energy (ERA) issued on July 15, 1979. *See* 44 FR 42538 *et seq.* (July 19, 1979). Those regulatory amendments generally made permanent the provisions of an Interim Final Rule that the ERA issued on May 1, 1979. *See* 44 FR 26712 (May 4, 1979); *See also* Standby Regulation Activation Order No. 1, 44 FR 11202 (February 28, 1979). The DOE allocation regulations now provide that the base period for motor gasoline allocation is the corresponding month of the period November 1977 through October 1978. 10 CFR 211.102. The regulations also permit a retail sales outlet, wholesale purchaser-consumer, or bulk purchaser of motor gasoline to substitute as its base period volume its average monthly purchases during the October 1978 through February 1979 period if that average is 10 percent greater than its purchases during any base period month. 10 CFR 211.104.

In its Application, the District generally contends that the citizens of the District are experiencing an unfair distribution of the burdens associated with the current gasoline shortage. In support of this position, the District maintains that the DOE allocation regulations prevent the District as a whole from receiving its fair share of gasoline supplies. For example, the District contends that the allocation regulations unfairly favor rural areas as well as areas which experienced peak demand at many service stations during the October 1978 through February 1979 period. In addition, the District observes that it does not possess the flexibility which States possess to distribute to a metropolitan area that portion of the State set-aside which is attributable to rural allocations. The District also argues that the economy of the city of Washington has been and continues to be seriously and adversely affected by the gasoline shortage. On the basis of these contentions, the District requests an increase in the monthly allocation of each retail service station within the city of Washington. The specific relief requested by the District in its Application would increase the allocation of each retail outlet within the city by four percent.

On October 12, 1979, we issued an Interlocutory Order which pertained to the District's Application. *District of Columbia*, 3 DOE Par. (October 12, 1979). A copy of the October 12 Interlocutory Order is included as Appendix A to this Decision. The Interlocutory Order discussed the data we collected from a number of sources in an effort to evaluate the District's general contention that the citizens of the District are experiencing an unfair portion of the burdens associated with the gasoline shortage. We concluded that the District did in fact experience a significant reduction in gasoline supplies during June of this year. During that month the District received 88 percent of the gasoline supplies which it received during June of 1978. In contrast, deliveries of gasoline to the United States as a whole during June equalled 95 percent of deliveries during June of 1978. Furthermore, only four States experienced a greater percentage reduction in gasoline supplies during June than the District. The data available to us at this time indicates that the volume of gasoline supplied to the District during July equalled 83 percent of July 1978 deliveries. Gasoline deliveries to the entire United States during this month amounted to 92 percent of 1978 deliveries. Accordingly, it is evident that the percentage reduction in the volume of gasoline supplied to the District during June and July exceeded the national average by a considerable amount.

In the Interlocutory Order we also discussed the data submitted to us by the Major suppliers of gasoline to the following six cities and metropolitan areas: Washington, Boston, Phoenix, Indianapolis, Milwaukee, and San Francisco. The data indicated that Washington, experienced a greater reduction in gasoline deliveries during June than all of these cities except Milwaukee. For example, the total volume of gasoline delivered to the Washington metropolitan area during June amounted to 85.3 percent of the volume supplied during June 1978. The corresponding percentages for the other metropolitan areas varied from 84.4 percent (Milwaukee) to 88.8 percent (Boston) to 96.3 percent (Phoenix). Furthermore, among the six metropolitan areas surveyed, Washington possessed the smallest percentage of stations that qualified for the unusual growth adjustment. For example, only 13.8 percent of the retail outlets in the Washington metropolitan area qualified for the unusual growth adjustment during June. The percentage of stations which qualified for the unusual growth adjustment during June in the remaining metropolitan areas surveyed ranged from 13.9 percent (Indianapolis) to 54.1 percent (Phoenix). However, the percentage reduction in the number of outlets in operation in the Washington metropolitan area was actually the lowest among the six cities surveyed.

After reviewing the record, we tentatively concluded that the significant reduction in supplies experienced by the District was not due solely to the nationwide reduction in gasoline supplies which occurred during this period. We found that the major suppliers of gasoline to the Washington area had lower allocation and delivery fractions during June than the major suppliers of gasoline to the other metropolitan areas for which data was obtained. For example, the weighted average allocation fraction of the major suppliers of gasoline to Washington during June equalled .7610. In contrast, the weighted average allocation fractions of the suppliers to the San Francisco and Phoenix areas during these months equalled .8277 and .8207, respectively. The weighted average allocation fraction of the suppliers to Milwaukee, the one city surveyed which experienced a greater reduction in supplies than Washington during June, equalled .7513. The United States weighted average allocation fraction during June was .7790.

After reviewing the data summarized above, we stated that:

As a general matter, exception relief may be approved when a showing is made that a firm or a class of persons is experiencing a serious hardship, gross inequity, or unfair distribution of burdens as a result of the application of the DOE regulations. *See Commonwealth Oil Refining Co., Inc.*, 2 DOE Par. 81,069 (1978). It is certainly possible that in an uncontrolled environment, shortages of motor gasoline would not be focused on particular areas of the country. If the primary suppliers to certain areas possessed relatively less gasoline than the suppliers in other areas, one would expect gasoline supplies to move into the shortage regions. Of course, the price charged for gasoline under those circumstances might well pose considerable economic and financial burdens. In addition, we do recognize that the approval of an exception which directs suppliers of gasoline that maintain relatively high allocation fractions to deliver additional gasoline to a region of the country whose suppliers possess a relatively low weighted average allocation fraction would substantially alter the allocation program. As a result, we would be prepared to take action of that nature only if an exception applicant established that:

(i) the types of supply and distribution indicators portrayed in Tables 2 through 10 on balance indicate that the region involved is in a significantly disadvantageous position as compared to other regions of the country;

(ii) tangible evidence, such as gasoline lines, exists that demonstrates the adverse impact of this situation on the residents of the community involved; and

(iii) the nature of the burdens experienced in the economy of the region or by the residents of the area are substantially greater than those generally experienced in the country.

It is quite possible that the District could have satisfied the criteria set forth above if it had filed a request for temporary exception during the month of June. As noted earlier, it appears that the weighted average allocation fraction of the major suppliers to the District during this month was in fact relatively low. Lengthy gasoline lines formed in the Washington area during this month, and the residents of the area encountered considerable difficulty in obtaining adequate quantities of gasoline. The District has also submitted evidence which generally demonstrates that serious disruptions in the economic well-being of the area occurred during this period.

However, the District did not actually file its request for a temporary exception until July 18, 1979. By that date, gasoline lines in the Washington area had largely disappeared. The preliminary data collected by the Office of Hearings and Appeals during the last two weeks of July and the first week of August did not indicate that the city of Washington was inordinately disadvantaged by the operation of the allocation program at that time. . . . Furthermore, there is no evidence at the present time that the District is experiencing serious supply imbalances or that the economy of the Washington area is seriously and adversely affected by insufficient gasoline supplies.

District of Columbia, supra, slip op. at 12–14.

In accordance with these determinations, we tentatively concluded that the District's request should be dismissed without prejudice to a refiling at a later date. We recognized, however, that the District might wish to make a further submission after reviewing our tentative conclusions and the criteria set forth above. As a result, we issued our determination in the form of an Interlocutory Order and permitted the District to file a response to that Order. The District filed such a response on November 26, 1979.

In its submission, the District generally contends that the Interlocutory Order does not provide a mechanism that will enable the DOE to implement immediate relief when that relief is justified. The District maintains that, by the time it has demonstrated that the criteria set forth in the Interlocutory Order have been satisfied, the adverse effects of a gasoline shortage will already have been experienced by the residents of the District. In essence, the District contends that it will continue to experience unfair burdens during a period of shortage while the administrative process is being completed. As a result, the District maintains that the DOE should establish a "trigger" mechanism which would set forth very specific criteria which must be satisfied before an exception of the type requested by the District would be approved. The District envisions that such a mechanism would lead to the immediate implementation of relief as soon as data is submitted which demonstrates that all of the criteria have been satisfied.[1]

After reviewing this matter, we have concluded that there is considerable merit to the position advanced by the District. In our view, the record clearly indicates that the residents of the District experienced an unfair distribution of the burdens associated with the gasoline shortage during the months of June and July. During these months the total volumes of gasoline supplied to the entire United States amounted to 95 and 92 percent, respectively, of the volumes of gasoline supplied during June and July of 1978. By comparison, the total volumes of gasoline supplied to the District during these months amounted to 88 and 83 percent of the volumes supplied during June and July 1978. Extremely long gasoline lines formed in the Washington metropolitan area during these months. Furthermore, as we observed in the Interlocutory Order, the District has submitted evidence which demonstrates that the economy of the Washington area was adversely affected to a considerable extent by the shortage of gasoline supplies. Accordingly, we believe that the District would have satisfied all of the criteria set forth in the Interlocutory Order during June and July and that exception relief would have been appropriate for those months.

However, by the time the data was collected which demonstrated that the citizens of the Washington area incurred an unfair distribution of burdens and that exception relief was justified, the need for such an exception no longer existed. In essence, the requirement that the District demonstrate and document the burdens being experienced essentially precluded the District from receiving immediate relief when it was justified. It is our judgment, based on the experience we have gained in this proceeding, that a more expeditious remedy is essential. We agree with the District that a trigger mechanism should be established which sets forth very specific criteria. If these criteria have been satisfied, the District need only document that fact to the Office of Hearings and Appeals. An Order directing additional gasoline supplies into the District would then be issued immediately.

The trigger mechanism should be based on the general standards established in the Interlocutory Order. In our view those criteria are sound and should be maintained.

However, we also believe that it is necessary to indicate precisely how those standards should be applied and how a given petitioner such as the District can demonstrate that it meets these standards. Before we proceed with that discussion, however, several introductory remarks are in order. The record in this case indicates that the District made a concerted effort to alleviate the difficulties created by the gasoline shortage before it requested assistance from the DOE. For example, the District implemented an odd/even purchase system and utilized all of its set-aside volumes in an effort to reduce gasoline lines and ease the burdens on motorists. We are persuaded that evidence of efforts of this sort must always be present before exception relief of this nature should be approved. We do not believe that a municipality or State should receive additional gasoline supplies unless and until it has made a reasonable effort to reduce the burdens of a gasoline shortage through its own initiatives. In the specific case of the District, we believe that the District must demonstrate that it has rationally distributed all set-aside volumes available to it before it requests relief from the Office of Hearings and Appeals.

We will now discuss the type of specific factual showings which would satisfy the criteria set forth in the Interlocutory Order. We will discuss these criteria with specific reference to the position in which the District finds itself. However, it should be noted that this discussion would also generally apply to any municipality or State that believes its residents are experiencing an unfair distribution of burdens as a result of the gasoline shortage.

The first criterion relates to the issue of whether the District is experiencing a reduction in gasoline supplies which is greater than the reduction in supplies being experienced by other States. At any given time during a particular month, the ERA possesses data which pertains to anticipated gasoline deliveries to each State, as well as the District of Columbia, by each prime supplier of gasoline. Accordingly, on any given day we can compare anticipated deliveries to the District with anticipated deliveries to the United States as a whole, when viewed as a fraction of actual deliveries during the corresponding month of 1978.[2] In our judgment, the first criterion would be satisfied if this data demonstrated that the District was receiving 5 percent less gasoline than the national average. For example, if the data submitted to the ERA indicated that the volume of gasoline supplied to the entire United States during a given month would equal 90 percent of the volume supplied during the same month of 1978, while the anticipated volume of gasoline supplied to the District would equal 85 percent of the 1978 volume, this criterion would have been satisfied.

We realize that the District will not have access to this proprietary data. However, if the District finds that it satisfies the remaining criteria in accordance with the discussion below, it may petition for the issuance of an immediate Order if the Office of Hearings and Appeals concludes that the District is experiencing a supply shortfall which is 5 percent in excess of the national average. We note that the District would have easily met this criterion in July. On July 16, for example, the ERA projected that anticipated deliveries to the District would equal 81 percent of July 1978 volumes and that anticipated deliveries to the United States would equal 90 percent of July 1978 volumes.

Of course, the use of an "anticipated delivery" figure does pose certain problems. Actual deliveries are frequently less than anticipated deliveries. However, actual data is generally not available until several months after the month in question is completed. Consequently, an immediate remedy based on actual data would not be possible. Furthermore, it has been our experience that anticipated delivery figures generally indicate which States are in fact experiencing a disproportionate reduction in gasoline supplies. It is our belief that the use of anticipated delivery figures will be sufficiently accurate and will allow us to evaluate whether immediate action is necessary.

We recognize, however, that it would be useful to indicate how the District itself, on the basis of information available to it, could determine whether it satisfied the first criterion. In accordance with the discussion in the Interlocutory Order, the District might demonstrate that the weighted average allocation fraction of the major suppliers to the Washington metropolitan area is significantly less than the nationwide average allocation fraction. This also poses certain difficulties, for the District would be unable to ascertain the relative share of the market possessed by the suppliers to the overall Washington metropolitan area at any given time. However, the District does possess monthly data with regard to the actual volumes of gasoline supplied to the District itself by all suppliers in the past. Accordingly, the District can calculate the relative shares of the market possessed by the suppliers to the District for each month of the base period.[3] The District can then multiply the allocation fractions announced by those suppliers for the month in question by the market shares possessed by the suppliers during the base period month corresponding to the month in question, and thereby calculate a weighted average allocation fraction for the District itself. If this figure is more than 3 percent below the national average allocation fraction (a figure which is readily available from the DOE), we will consider the first criterion stated in the Interlocutory Order to be satisfied. We note that eight States would have satisfied this criterion during October, for the weighted average allocation fractions of the suppliers of gasoline to these States during October were more than 3 percent below the national average.

In summary, the District may satisfy the first criterion set forth in the Interlocutory Order in any given month by demonstrating that (i) anticipated gasoline delivery data demonstrates that the District will experience a reduction in gasoline supplies during the month in question which is at least 5 percent more than the nationwide reduction in gasoline supplies, when compared with actual volumes delivered during the corresponding month of 1978; *or* (ii) the weighted average allocation fraction of the suppliers to the District is at least 3 percent lower than the average allocation fraction for the entire United States.[4]

The second criterion established by the Interlocutory Order pertains to the adverse effects experienced by the motorists of a particular community as a result of a significant reduction in gasoline supplies. After reviewing this matter, we have concluded that two readily identifiable phenomena exist which reflect the impact on motorists of a gasoline shortage: gasoline lines, and reduced service station operating hours. It is our judgment that this criterion would be satisfied by a demonstration that gasoline lines are a regular occurrence and that service stations have substantially reduced their hours of operation.

This demonstration can be made, however, only if very specific criteria are established. In the case of the District, we are persuaded that gasoline lines can be judged to be a regular occurrence when at least *50* percent of all retail outlets in the District experience a significant gasoline line at least once during 75 percent of the days included in a recent sample period of at least four days. A "significant gasoline line" shall be defined as a gasoline line in which at least eight vehicles are awaiting service for each side of a service island that is open at the retail outlet in question. We are also persuaded that a service station can be judged to have significantly reduced its hours of operation if it sold gasoline for 5.5 hours per day or less during at least 75 percent of the days included in a recent sample period of at least four days. To satisfy this criterion, the District must demonstrate that 50 percent of the service stations within the District have reduced their operating hours by this amount.

The District can demonstrate that these factors exist by obtaining signed certifications directly from retail outlets within the city. Alternatively, the District could monitor the operation of the outlets within the city on a regular basis in order to determine whether these factors exist. We will also accept the results of a phone survey conducted by the District, provided that the District is willing to provide a signed certification with respect to the accuracy of the information it presents. As a general matter, we believe that the District can most effectively collect the necessary information by continuously monitoring a representative sample of stations within the District. For example, if the District can submit detailed information which shows that more than 50 percent of a representative sample of stations are experiencing gasoline lines and have reduced their hours of operation, we would accept this data as a demonstration that the criterion has been satisfied.

We wish to emphasize, however, that the District must demonstrate that gasoline lines have formed *and* that service stations have reduced their hours of operation. If gasoline lines have formed, but stations have not reduced their hours of operation by a significant amount, it would appear that motorists are electing to purchase gasoline at the same times and that the difficulties that

motorists are experiencing could be alleviated if purchases were spread out over the day. Alternatively, if gasoline lines have not formed, we could not conclude that a burden had been placed on motorists merely because stations had reduced their hours of operation. Although this criterion may appear to be fairly stringent, it should be pointed out that the District certainly could have satisfied this criterion during the months of June and July.[5]

In summary, the District may satisfy the second criterion set forth in the Interlocutory Order at any given time by demonstrating that: (i) at least 50 percent of all retail outlets in the District sold gasoline for 5.5 hours per day or less during at least 75 percent of the days included in a recent sample period of at least four days; *and* (ii) at least 50 percent of all retail outlets in the District experienced a significant gasoline line at least once during 75 percent of the days included in a recent sample period of at least four days. For the purpose of this criterion, a significant gasoline line shall be defined as a gasoline line in which at least eight vehicles are awaiting service for each side of a service island that is open at the retail outlet in question.

The third criterion established in the Interlocutory Order pertains to the economic impact on a given community of a gasoline shortage. We realize that it would be most difficult for the District to quickly collect data which would demonstrate the immediate impact of a gasoline shortage on the economy of the city of Washington. However, on the basis of the material which the District has already submitted to us, we are led to conclude that the District has already satisfied the third criterion. As we observed in the Interlocutory Order, the material submitted by the District in this proceeding indicates that very serious economic dislocations occurred during the month of July as a result of the gasoline shortage. It seems quite likely that the same type of economic dislocations would occur if another serious shortage situation were to develop. Under the circumstances, it is our conclusion that the District does not need to make a further showing that it satisfies this criterion.

If the District satisfies the criteria discussed above, the most direct and effective remedy would be to increase the allocation of each retail outlet within the District by a fixed percentage during the month in question. For example, the monthly allocation of each retail outlet could be increased by five percent. If the supply shortage to the District (criterion one) should exceed five percent, we could increase the allocation of each outlet within the District up to the nationwide supply percentage. This action would be for one month only, and the District would be required to submit updated information if it wished to receive similar relief in the following months. The District may however suggest alternative forms of relief, such as increasing the State set-aside without reducing normal deliveries to retail outlets. In that manner the District Government could direct additional gasoline supplies to the locations which would make the most significant contribution to alleviating the shortage.

We envision that relief will be implemented immediately through the issuance of a Supplemental Order in this proceeding as soon as the data submitted to the Office of Hearings and Appeals demonstrates that the District has satisfied the criteria outlined above. The District will not need to submit a formal Application for Exception; it will only be required to submit the data it has collected and request that a Supplemental Order be issued. If the Office of Hearings and Appeals finds that the three criteria discussed above have not been satisfied, it will inform the District of this conclusion in writing and indicate the basis for this conclusion.

As a final matter, we wish to point out that it does not appear from the data available to us at this time that the District currently satisfies all of the criteria set forth in the Interlocutory Order and discussed above. For example, the anticipated gasoline delivery fraction to the District actually exceeded the nationwide anticipated gasoline delivery fraction during November and December, when anticipated deliveries are viewed as a percentage of actual deliveries during the corresponding month of 1978. The preliminary January data submitted to the DOE does not indicate that this situation will change significantly during this month. It also does not appear that the weighted average allocation fraction of the suppliers to the District during January is below the national average. Accordingly, we cannot conclude that the District has satisfied the first criterion at this time. Furthermore, although gasoline lines have appeared on occasion during the last several months, it is not our impression that they have occurred with sufficient regularity that the second criterion has been satisfied.

It is therefore ordered that:

(1) The Application for Temporary Exception filed by the District of Columbia (the District) on July 18, 1979 is hereby dismissed.

(2) The District is hereby granted an exception as set forth in Paragraphs (3) through (6) below, subject to the conditions set forth in Paragraph (7) below.

(3) Notwithstanding any contrary provisions of the regulations of the Department of Energy, a Supplemental Order will be issued increasing the monthly motor gasoline allocation of the District if the District demonstrates that each of the following criteria have been satisfied at any time during the month in question:

(a)(i) anticipated gasoline delivery data indicates that the District will experience a reduction in gasoline supplies during the month in question which is at least 5 percent more than the national reduction in gasoline supplies, when compared with actual volumes delivered during the corresponding month of 1978; *or*

(ii) the weighted average allocation fraction of the suppliers to the District is at least 3 percent lower than the average allocation fraction for the entire United States for that month.

(b)(i) at least 50 percent of all retail outlets in the District sold gasoline for 5.5 hours per day or less during at least 75 percent of the days on which they were open that are included in a recent sample period of at least four days; *and*

(ii) at least 50 percent of all retail outlets in the District experienced a significant gasoline line at least once during 75 percent of the days included in a recent sample period of at least four days. For the purpose of this criterion, a significant gasoline line shall be defined as a gasoline line in which at least eight vehicles are awaiting service for each side of a service island that is open at the retail outlet in question.

(4) The Supplemental Order referred to in Paragraph (3):

(i) shall be issued within 5 business days after the Office of Hearings and Appeals possesses information which demonstrates that the criteria set forth in Paragraph (3) have been satisfied;

(ii) shall apply only to the month in which it is issued; and

(iii) shall increase the monthly allocation of every retail outlet in the District by 5 percent, or by the percentage necessary to bring the District to the nationwide delivery percentage, whichever is greater; or shall implement other comparable relief.

(5) If the District requests that a Supplemental Order be issued and the Office of Hearings and Appeals concludes that the District has not satisfied the criteria set forth in the text of this Decision, the Office of Hearings and Appeals shall notify the District of this conclusion in writing and shall indicate the basis for this conclusion.

(6) If the District files a request for the issuance of a Supplemental Order during the first ten days of any given month, the Office of Hearings and Appeals may in its discretion hold the application in abeyance until the eleventh day of the month. Any such determination to hold the application in abeyance pursuant to this Paragraph shall be based on a finding that the aggregate data available for the analysis of the request will be substantially enhanced by the additional material to be furnished to the DOE by the eleventh day of the month.

(7) As a condition to receiving exception relief pursuant to the Supplemental Order referred to in Paragraph (3), the District shall demonstrate that is has made a concerted effort to alleviate gasoline supply shortages through the means available to it. Consequently, any request for the issuance of a Supplemental Order shall contain evidence that the District:

(i) has rationally distributed all set-aside volumes of gasoline available to it;

(ii) has instituted measures which are designed to reduce gasoline lines, such as odd-even gasoline purchase plans; and

(iii) has attempted without success to obtain additional gasoline supplies directly from the major gasoline suppliers to the District.

(8) This exception is based upon the presumed validity of the statements, allegations, and documentary material submitted by the applicant. It may be revoked or modified at any time upon a determination that the factual basis underlying the exception application is incorrect.

(9) An Appeal from those portions of this Decision which deny in part or in whole the

relief requested may be filed by any person who is aggrieved or adversely affected by the denial of exception relief. Such Appeal shall be filed with the Federal Energy Regulatory Commission pursuant to 18 CFR 1.40 43 FR 35907.

References

1. As in its initial Application, the District argued in its most recent submission that it is uniquely disadvantaged by the fact that it does not posses the flexibility which States possess to distribute to a metropolitan area that portion of the State set-aside which is attributable to rural allocations. In principle, we agree that the District does not possess this flexibility. If they chose to do so, the set-aside officers of States such as Maryland or Virginia could elect to direct all set-aside volumes to metropolitan areas where gasoline lines have formed. This does not mean that set-aside volumes have actually been used in this manner in the past. In order to evaluate whether the District is in fact disadvantaged in practice by the operation of the State set-aside Program, we requested information from the thirty largest prime suppliers of gasoline in the United States. The information we requested pertained to the volumes of set-aside gasoline which these firms supplied during the months of June, July and August 1979 to the following States: Arizona, California, Colorado, District of Columbia, Indiana, Maryland, Massachusetts, South Carolina, Virginia, and Wisconsin. The data which we have received indicates that some State set-aside offices do not directly utilize all of the gasoline available to them. In fact it appears that a significant portion of the gasoline furnished to set-aside offices in certain States is simply returned to the suppliers to be distributed throughout the State. For example, the data submitted by the major suppliers of gasoline to the State of California indicates that the California set-aside Office returns virtually all of the gasoline it receives to the suppliers involved, to be included in the suppliers' statewide distribution network. It also appears that a significant portion of the set-aside gasoline furnished to the States of Indiana and Virginia is returned to the suppliers involved and distributed throughout the States. Conversely, the data submitted to us indicates that the set-aside Offices in the District of Columbia, Colorado, and Wisconsin utilize virtually all of their set-aside volumes directly.

On the basis of the data submitted to us in this proceeding, we can not conclude that the residents of the District have been seriously disadvantaged in practice by the operation of the set-aside Program. Since the District set-aside Office generally distributes all of the set-aside volume available to it, it seems likely that the residents of the District actually benefit from the set-aside Program to a greater degree than the residents of other cities.

2. Our comparisons contrast gasoline deliveries during the month in question with actual deliveries during the corresponding month of 1978. It would not be appropriate to simply compare anticipated deliveries during any given month with actual deliveries during the same month of the previous year. Instead, it is our belief that anticipated gasoline deliveries during any month must be compared with actual deliveries during a recent representative month in which supply and distribution patterns were relatively normal. It seems clear that the months of 1979 can not be used for representative purposes in this fashion. For the most part, however, supply and distribution patterns were not affected by shortages and allocation fractions during 1978. We are persuaded that the months of 1978 should be used for comparison purposes.

3. In making this calculation, we have used the corresponding month of the base period. Since supply obligations in any given month are based upon actual deliveries during the base period month, the calculation of the relative percentage of the market that is supplied by a given firm in the month in question of necessity must be based upon deliveries during the base period month.

4. In its November 26 submission, the District argues that it should be entitled to additional gasoline supplies if the projected weighted average allocation fraction of the eight major suppliers to the District falls below 88 percent. We can not accept this argument. The evaluation of whether the District is experiencing an unfair distribution of the burdens associated with a gasoline shortage of necessity must be based upon a comparison of the District's position relative to other areas in the United States. A mere finding that the weighted average allocation fraction of the suppliers to the District had fallen below a certain level would not by itself suggest that the District was unfairly disadvantaged by the DOE allocation regulations. We must compare the relative percentage of gasoline being supplied to the District with the relative percentage of gasoline being supplied to the entire United States. During a period of shortage, the allocation fraction of the entire United States would in all likelihood fall below 88 percent. Exception relief for the District would not be appropriate in such an instance merely because the allocation fraction of the suppliers to the District had also fallen below 88 percent. By its very nature, exception relief is intended to alleviate unusual or unique problems being experienced by an individual, a firm, or a class of persons. In order to ascertain whether the District is experiencing a supply shortfall which is unusual or disproportionate, we must compare projected supplies to the District with projected supplies in the rest of the United States.

5. The District has submitted information which indicates that, during the week of July 11–16, a typical retail outlet in the District was open only 28 hours per week, or an average of 4 hours per day. During this week, gasoline lines regularly formed which required motorists to wait more than one hour to obtain gasoline.

Appendix A

October 12, 1979.

Decision and Order of the Department of Energy

Interlocutory Order

Name of Petitioner: District of Columbia.
Date of Filing: July 18, 1979.
Case Number: DEZ–0058.

On July 18, 1979, Marion S. Barry, Jr., Mayor of the District of Columbia (the District), filed an Application for Temporary Exception with the Office of Hearings and Appeals of the Department of Energy. In that Application, the District requested that the monthly motor gasoline allocation of each retail outlet within the District be increased by four percent. The temporary exception is requested pending a final determination on an Application for Exception which the District has stated it intends to file.

The District's Application involves amendments to the Mandatory Petroleum Allocation Regulations that the Economic Regulatory Administration of the Department of Energy (ERA) issued on July 15, 1979. *See* 44 FR 42538 *et seq.* (July 19, 1979). Those regulatory amendments generally made permanent the provisions of an Interim Final Rule that the ERA issued on May 1, 1979. *See* 44 FR 26712 (May 4, 1979); *see also* Standby Regulation Activation Order No. 1, 44 FR 11202 (February 28, 1979). The DOE allocation regulations now provide that the base period for motor gasoline allocation is the corresponding month of the period November 1977 through October 1978. 10 CFR 211.102. The regulations also permit a retail sales outlet, wholesale purchaser-consumer, or bulk purchaser of motor gasoline to substitute as its base period volume its average monthly purchases during the October 1978 through February 1979 period if that average is 10 percent greater than its purchases during any base period month. 10 CFR 211.104.

In its Application for Temporary Exception, the District generally contends that the citizens of the District are experiencing an unfair distribution of the burdens associated with the current gasoline shortage. In support of this position, the District maintains that the DOE allocation regulations are structured in a fashion which unfairly prevents the District as a whole from receiving its fair share of gasoline supplies. For example, the District contends that the allocation regulations unfairly favor rural areas as well as areas which have experienced significant growth since October of 1978. The District also observes that it does not possess the flexibility which State possess to distribute to a metropolitan area that portion of the state set-aside which is attributable to rural allocations. The District also argues that the economy of the city of Washington has been and continues to be seriously and adversely affected by the gasoline shortage. On the basis of these contentions, the District requests an increase in the monthly allocation of each retail service station within the city of Washington.

The specific relief requested by the District in its Application would increase the allocation of each retail outlet within the city by four percent. During the month of July, this would have insured that the total volume of gasoline delivered to the District as a whole was equal to the volume delivered during July 1978, the corresponding month of the base period.

As we have pointed out in a number of similar cases, the approval of the type of temporary exception requested by the District would inevitably result in the

diversion of gasoline supplies from other regions of the United States to the city of Washington. *See, e.g., D&D Mobil Service Center,* 3 DOE Par. (August 17, 1979); *Kelly's Exxon,* 3 DOE Par. (July 31, 1979). Nevertheless, a temporary exception would still be warranted if the record contained clear evidence that the residents of the city of Washington are in fact bearing an unfair portion of the burdens which have resulted from the current gasoline shortage. However, evidence which merely demonstrates that the residents of a particular area are experiencing some difficulties or inconveniences as a result of the gasoline shortage does not necessarily provide a basis for the approval of a temporary exception. Since March 1, 1979, the Office of Hearings and Appeals has received thousands of requests for additional gasoline supplies filed by retail outlets, branded and unbranded independent marketers, retail service station associations, and municipalities located in every region of the United States. If anything, the data in these applications demonstrate that individuals and firms in virtually every region of the United States have experienced difficulty at certain times in obtaining the amount of gasoline they would like to receive. These submissions also demonstrate that the economies of a number of metropolitan areas within the United States have been significantly and adversely affected by the tight gasoline supply situation. Accordingly, only a strong showing that the residents of the Washington area are bearing a disproportionate share of the burdens being generally experienced by all individuals in the United States would persuade us that public policy considerations favor the approval of a temporary exception of the type requested by the District.

We recognize, however, that the burden of demonstrating that the residents of a particular metropolitan area are incurring an unfair portion of the nation's energy problems is not easily met. Information with respect to the volumes of gasoline furnished by all suppliers to various metropolitan areas is generally not available to the public. As a result, we found it necessary to obtain and assimilate proprietary data from a number of sources in order to evaluate the District's request.

In doing so, we obtained detailed data that reflects the monthly quantity of gasoline furnished to the city of Washington since January 1976. We also obtained data with respect to the quantity of gasoline furnished to each State in the United States during the months of April, May, and June of 1978 and 1979. In addition, we obtained data which enabled us to compare gasoline deliveries to the city of Washington during the months of May and June of 1978 and 1979 with gasoline deliveries to other representative cities during these same months. At the specific request of counsel for the District, we selected Boston, Indianapolis, Milwaukee, Phoenix, and San Francisco as representative cities for comparison purposes. We also requested data from the major suppliers to each of these cities which enabled us to evaluate the District's general contentions that (i) the unusual growth adjustment included in the regulations unfairly diverts additional supplies of gasoline to certain regions of the country; and (ii) an unusually large number of retail outlets in the Washington area have closed since June of last year, reducing the overall quantity of gasoline delivered to the Washington area.

Before proceeding with an analysis of the data collected in this proceeding, several general remarks on the source and the usefulness of this data are in order. Each firm which is the first supplier of gasoline to any given State is required to file a report with the DOE each month which specifies the total quantity of gasoline that it supplied to that State during the month in question (Form EIA-25). The aggregate supply figures included in this Decision for each State, including the District of Columbia, are based upon the information set forth in the EIA-25 Forms filed each month. However, the DOE does not regularly collect supply data for particular cities or metropolitan areas. Accordingly, we found it necessary to request that the major suppliers of gasoline to the cities of Washington, Boston, Indianapolis, Milwaukee, Phoenix, and San Francisco furnish this data directly to the Office of Hearings and Appeals. The specific request for information which we sent to each major supplier of gasoline in each city is set forth below:

(1) Specify the total volume of gasoline (in gallons) supplied during the months of May and June of 1978 and 1979 to the city in question. For each of these months, please specify the total volume of gasoline furnished directly to retail outlets as well as the total volume of gasoline furnished to jobbers within the city. Finally, of the gasoline furnished to jobbers, please estimate the percentage of that gasoline that was ultimately supplied to retail outlets within the city and indicate the basis for this estimate.

(2) Specify the total number of retail outlets in operation which you supplied during the months of June of 1978 and June of 1979 within the city in question.

(3) Indicate the percentage of retail outlets in the city in question which you supplied with gasoline during the month of June of 1979 which qualified for an increased allocation as a result of the unusual growth adjustment (Section 211.104).

(4) Please define the geographic area which you would classify as the metropolitan area for this city. Using this definition, please furnish the information specified in questions (1) through (3) above for the entire metropolitan area.

Most of the firms to which the inquiry was sent furnished the requested data in a fairly prompt manner. Unfortunately, however, we did encounter a number of obstacles in our effort to compile complete data for all of the cities. Several firms apparently failed to receive the telegrams we sent and a number of firms failed to submit all of the requested data. Another difficulty encountered pertains to the request that the suppliers involved specify the percentage of the gasoline which they supplied to jobbers which was ultimately supplied to retail outlets within the city or metropolitan area in question. Many of the firms responding to the telegrams stated that they did not possess any information with respect to the ultimate disposition of the product sold to many, if not all, of their jobbers in the area in question. For example, one firm notified us that it sold gasoline to one jobber at a terminal in Phoenix which the jobber then distributed to locations throughout the States of Arizona and New Mexico. Other firms which supplied product to jobbers in other cities reported that it was quite possible that much of the gasoline sold to these jobbers was ultimately supplied outside the metropolitan area involved. Accordingly, it appears that we could not obtain conclusive data with respect to the quantities of gasoline supplied to a particular city or metropolitan area unless we requested detailed information from each jobber which operated in that area. However, requesting this type of information would necessarily have delayed this proceeding for a considerable period of time.

Notwithstanding these difficulties, we believe that the data collected does provide a useful indication of the actual volume of gasoline supplied to the cities and metropolitan areas in question, when viewed as a percentage of the gasoline supplied during the same month of the previous year. All of the major suppliers of gasoline in the country funished the data requested. Most of these firms supply retail outlets directly and accordingly were able to indicate precisely how much gasoline they supplied to retail outlets during the months in question. Furthermore, our review of the data submitted in this proceeding indicates that the percentage reduction in the volume of gasoline delivered to the cities involved during the months in question is approximately the same, regardless of whether we consider only the volumes delivered directly to retail outlets or the total volumes delivered to retail outlets and jobbers. Finally, we note that it is likely that a jobber which received a smaller quantity of gasoline during May or June of this year than it received during the same month of last year reduced the amount which it delivered to all of its customers by approximately the same percentage. Accordingly, the use of the overall supply data furnished by the major suppliers for jobbers should not materially alter our analysis.

The data obtained in the course of this proceeding is summarized in the Tables attached to this Decision. The information in these Tables is identified below:

Table 1 Actual Gasoline Deliveries to Washington, D.C. by Month since January 1976

Table 2 Actual Deliveries of Motor Gasoline by State: Comparision of April–June 1978 with April–June 1979

Table 3 June 1979 Gasoline Deliveries as a Percentage of June 1978 Gasoline Deliveries, by State

Table 4 Summary of Date Received for the Cities of Washington, Boston, Milwaukee, and Phoenix

Table 5 Summary of Data Received for the Metropolitan Areas of the Six Cities Involved

Table 6 Estimated June Allocation Fractions of Major Gasoline Suppliers

Table 7 June 1979 Deliveries as a Percentage of Supply Obligation (Delivery Fraction), by Supplier

Table 8 Delivery and Allocation Fractions of Major Suppliers to Each City
Table 9 June 1979 Weighted Average Delivery Fractions, by Metropolitan Area
Table 10 Estimated June 1979 Weighted Average Allocation Fractions, by Metropolitan Area

Table 1 portrays the total volume of gasoline delivered to the city of Washington during each month of the period from January 1976 through June 1979. This chart indicates that the quantity of gasoline supplied to Washington did in fact decline during May and June of this year. For example, the data in Table 1 indicate that the volumes of gasoline delivered to Washington during May and June of this year, when compared with the volumes delivered during May and June of 1978, declined by 5.40 and 12.53 percent, respectively. The Table also indicates that the percentage reduction in supplies that occurred during June of this year exceeded the percentage that occurred during June of this year exceeded the percentage reduction in supplies experienced during any single month since January 1977. In and of itself, this data suggests that the District did in fact experience a significant reduction in gasoline supplies during June which led to gasoline lines and readily identifiable supply shortages.

This preliminary observation must be viewed, however, in the context of a number of other relevant factual considerations. As discussed more fully below, virtually every State in the United States also experienced a significant reduction in gasoline supplies during the month of June. As a result, the reduction in supplies experienced by the District during this period was not necessarily unusual or evidence of an unfair distribution of burdens. It should also be noted that the data in Table 1 indicate that, since January of 1977, the District has frequently received less gasoline in any given month than it received during the same month of the previous year. Consequently, the fact that the District experienced a reduction in gasoline supplies during May and June of this year does not necessarily indicate that the DOE allocation regulations significantly altered the historical delivery pattern to the Washington area.

The District generally argues in its Application for Temporary Exception that it is unfair for the city of Washington to receive less gasoline during any month than it did during the corresponding month of the prior year. On the basis of the data in Table 1, we are not prepared to accept that position. During much of 1977 and 1978, when the gasoline allocation regulations did not have a major impact on the actual volumes of gasoline supplied to any given area, the District received less gasoline than it had during the same month of the prior year. In fact, this situation occurred during 12 months in succession, from June 1977 through May 1978. Despite this fact, gasoline lines did not form during any part of this period, and no evidence exists which would indicate that serious supply disruptions occurred.

As stated above, the reduction in supplies experienced by the District during the month of June was typical of similar reductions experienced on a nationwide basis. Tables 2 and 3 indicate the actual deliveries of motor gasoline by State during the months of April, May and June of 1979, when viewed as a percentage of deliveries during the corresponding month of 1978. The data in these Tables demonstrate that a nationwide reduction in gasoline supplies occurred during May and June. For example, only four States received more gasoline during June of 1979 than during June of 1978: Texas, New Jersey, Kansas, and California. Only four States received a higher percentage of 1978 deliveries during June than during May: California, Minnesota, Rhode Island, and Texas. Accordingly, it is clear that the reduction in the quantity of gasoline delivered to the District during the months of May and June was not unusual.

It is true that the percentage reduction in supplies to the District during May and June of this year was greater than the percentage reduction experienced by most States. For the month of June, the District experienced a percentage reduction of 12 percent. The data in Table 3 indicates that the median percentage reduction for the 50 States during June equalled 7 percent. However, during May and June a number of States experienced an even greater percentage reduction than the District. As the data in Table 3 indicates, the percentage reduction in the supply of gasoline during June to the States of Iowa, Massachusetts, Montana, and Delaware exceeded the percentage reduction in supplies to the District. Consequently, we are not persuaded solely on the basis of the data in Tables 2 and 3 that the percentage reduction in the supply of gasoline to the District is so great that the residents of the District are experiencing an unfair distribution of burdens. In fact, a portion of the burdens associated with the gasoline shortage might have been mitigated in the District by the extensive mass transit facilities available. These facilities are not generally available, for example, to most of the residents of many States which also incurred a percentage reduction in gasoline supplies similar to that of the District.

Tables 4 and 5 summarize the data which we received for the cities and metropolitan areas of Washington, D.C., Boston, Indianapolis, Milwaukee, Phoenix, and San Francisco. In our view the data in Table 5 are considerably more relevant than the data in Table 4 since a valid comparison of the relative burden experienced by the residents of a particular city should generally be based upon gasoline deliveries to an entire metropolitan area rather than deliveries within the city limits. As the District itself has observed, a substantial portion of the gasoline sold within the District has always been sold to individuals operating automobiles with Maryland and Virginia license plates. These individuals can also choose to purchase gasoline in the suburban communities immediately surrounding the District.

As analysis of the data in Table 5 does not however lead to a different factual conclusion than an analysis of the data in Table 4. Table 5 does indicate that Washington experienced a greater reduction in gasoline deliveries during June than Phoenix, Indianapolis, San Francisco, and Boston. For example, Table 5 indicates that the total volume of gasoline delivered to the Washington metropolitan area during June of 1979 equalled 85.3 percent of the volume of gasoline delivered during June of 1978. In contrast, gasoline deliveries to the Phoenix area during June of 1979 equalled 96.3 percent of deliveries during June of 1978. Of the major metropolitan areas surveyed, only Milwaukee experienced a greater percentage reduction in supplies than Washington. With respect to the number of retail outlets in operation in these cities, it appears from the data in Tables 4 and 5 that the percentage reduction in outlets in operation in the District was actually the lowest among the six cities surveyed. As the data in Table 5 indicates, the percentage of the retail outlets in operation in the Washington area declined by only 0.8 percent from June of 1978 to June of 1979. The percentage reduction in the number of retail outlets in operation in the other metropolitan areas ranged from 1.7 to 3.8 percent. At the same time, Washington possessed the smallest percentage of stations which qualified for the unusual growth adjustment. For example, the data in Table 5 indicates that only 13.8 percent of the retail outlets in the Washington metropolitan area qualified for the unusual growth adjustment during June. In contrast, Table 5 indicates that 54.1 percent of the retail outlets in the Phoenix metropolitan area qualified for increased allocations as a result of this provision. The percentage of stations which qualified for the unusual growth adjustment during June in the remaining metropolitan areas surveyed ranged from 13.9 to 33.0 percent.

The data which we have summarized in Tables 1–5 does indicate that the percentage reduction in the quantity of gasoline supplied to the District during June of this year generally exceeded the percentage reduction in the quantity of gasoline delivered to other metropolitan areas and States. The data in the remaining Tables appears to provide an explanation for the phenomenon.

Table 6 portrays the estimated allocation fractions for the month of June which the major suppliers of gasoline to the United States declared during the latter part of the month of May. Table 7 sets forth, for each major supplier of gasoline, actual June 1979 deliveries divided by each firm's estimated June 1979 supply obligation. For the purpose of this Decision, we will refer to this figure as a firm's "delivery fraction." Table 8 describes the June allocation and delivery fractions for the major suppliers to each of the cities for which we requested information in this proceeding. Table 9 sets forth the June weighted average delivery fractions by metropolitan area, while Table 10 sets forth the June weighted average allocation fractions by metropolitan area.

As a general matter, a metropolitan area which is served by suppliers which possess high allocation and delivery fractions is likely to receive relatively more gasoline than a metropolitan area which is served by suppliers which possess low allocation and delivery fractions. It is evident that a retail outlet supplied by a refiner which initially announced a high allocation fraction and subsequently applied a high delivery fraction

will receive a greater percentage of its base period allocation than a retail outlet supplied by a refiner which announces a low allocation fraction and fails to provide gasoline supplies significantly in excess of that fraction. Of course, allocation and delivery fractions are not precise figures which can be utilized to reach final conclusions with respect to deliveries; allocation fractions are necessarily estimates, and delivery fractions do not take into account the type of accounts which a particular refiner might possess or inaccuracies in a firm's estimate of its supply obligation. However, we believe that valid conclusions can be drawn from an analysis of the allocation and delivery fractions of the major suppliers to given areas.

In evaluating this data, a computation was made of the weighted average allocation and delivery fractions of the major suppliers to each of the six metropolitan areas in question. This data, which is set forth in Tables 9 and 10, indicates that the major suppliers of gasoline to the Washington area generally had lower allocation and delivery fractions than the major suppliers of the other cities, with the exception of Milwaukee. In fact, Washington had the lowest weighted average delivery fraction and the next to lowest weighted average allocation fraction. As the data in Table 9 indicates, the June weighted average delivery fraction for Washington was .8516. The June delivery fractions for the remaining metropolitan areas ranged from .8608 to .9474. The data in Table 10 indicates that the June weighted average allocation fraction for Washington was .7610, while the United States weighted average allocation fraction during this month was .7790.

Two of the three major suppliers of gasoline to San Francisco, Chevron and Arco, had higher allocation and delivery fractions than any of the largest nine suppliers of gasoline to the Washington area. The two largest suppliers of gasoline to Phoenix—Chevron and Union—had higher allocation fractions during May and June than any of the major suppliers to the Washington area. Rock Island and Marathon, which supply more than 40 percent of the Indianapolis market, both had very high delivery fractions during June. Rock Island, by far the largest supplier of gasoline to Indianapolis, actually supplied almost 100 percent of its June 1978 volume during June of 1979 to this metropolitan area, although the firm's overall delivery fraction equalled only 92.9 percent. The largest two suppliers of gasoline to Boston—Mobil and Gulf—also had higher delivery fractions than the largest three suppliers of gasoline to Washington. None of the four major oil companies which had relatively high allocation fractions—Marathon, Chevron, Union, and Arco—supplied a substantial quantity of gasoline to Washington during the month of June.

It would therefore appear that the explanation of why Washington, D.C. received relatively less gasoline than other States and metropolitan areas is contained in Tables 6–10. The major suppliers of gasoline to the District generally had lower allocation and delivery fractions than the major suppliers of gasoline to other areas. If Washington were supplied primarily by Chevron, Union, and Arco, the city in all likelihood would have received considerably more gasoline during June. Of course, this would not necessarily have prevented the formation of gasoline lines. We note that gasoline lines formed in Southern California during April, even though April 1979 deliveries to that State were 103 percent of April 1978 deliveries (Table 3). Furthermore, Chevron, Union, and Arco are three of the major suppliers of gasoline to Southern California. It is also worth noting that, during another shortage, Union, Arco, and Chevron might have lower allocation and delivery fractions than Exxon, Amoco, and Shell, the major suppliers to the District. In such a situation, Washington would receive relatively more gasoline than cities such as Phoenix, San Francisco, and Los Angeles.

The question remains as to whether the Office of Hearings and Appeals should attempt through the exceptions process to correct supply imbalances which occur because the suppliers of gasoline to a particular area have a lower weighted average allocation fraction.

As a general matter, exception relief may be approved when a showing is made that a firm or a class of persons is experiencing a serious hardship, gross inequity, or unfair distribution of burdens as a result of the application of the DOE regulations. *See Commonwealth Oil Refining Co., Inc.*, 2 DOE Par. 81,069 (1979). It is certainly possible that in an uncontrolled environment, shortages of motor gasoline would not be focused on particular areas of the country. If the primary suppliers to certain areas possessed relatively less gasoline than the suppliers in other areas, one would expect gasoline supplies to move into the shortage regions. Of course, the price charged for gasoline under those circumstances might well pose considerable economic and financial burdens. In addition, we do recognize that the approval of an exception which directs suppliers of gasoline that maintain relatively high allocation fractions to deliver additional gasoline to a region of the country whose suppliers possess a relatively low weighted average allocation fraction would substantially alter the allocation program. As a result, we would be prepared to take action of that nature only if an exception applicant established that:

(i) The type of supply and distribution indicators portrayed in Tables 2 through 10 on balance indicate that the region involved is in a significantly disadvantageous position as compared to other regions of the country;

(ii) Tangible evidence, such as gasoline lines, exists that demonstrates the adverse impact of this situation on the residents of the community involved; and

(iii) The nature of the burdens experienced in the economy of the region or by the residents of the area are substantially greater than those generally experienced in the country.

We recognize, of course, that it is difficult for any particular metropolitan area to demonstrate at any given time that the weighted average allocation fraction of the major suppliers to the area is significantly lower than the nationwide average allocation fraction. Such a showing generally requires the collection of data which is confidential and not subject to public disclosure. However, the Office of Hearings and Appeals now possesses data with regard to deliveries of motor gasoline to the cities of Washington, D.C., Boston, Indianapolis, Milwaukee, Phoenix, and San Francisco for the months of May and June of this year. It is reasonable to assume that the relative market shares possessed by the major suppliers to a given city during one month are representative of the relative market shares possessed by the same suppliers during other months. Accordingly, during any given month we will be able to evaluate the allocation fractions of the major suppliers to any of these six cities and thereby calculate a weighted average allocation fraction for the city. We could then compare this figure with the estimated nationwide allocation fraction to determine whether a particular metropolitan area is receiving substantially less motor gasoline than the national average. Additional data could also be obtained to calculate the weighted average allocation fraction for any other metropolitan area in an expeditious fashion. Consequently, the evaluation of future exception requests by cities or metropolitan area can be evaluated on the basis of the data already assembled in this proceeding and the analytic structure discussed in this Decision.

It is quite possible that the District could have satisfied the criteria set forth above if it had filed a request for temporary exception during the month of June. As noted earlier, it appears that the weighted average allocation fraction of the major suppliers to the District during these months was in fact relatively low. Lengthy gasoline lines formed in the Washington area during this month, and the residents of the area encountered considerable difficulty in obtaining adequate quantities of gasoline. The District has also submitted evidence which generally demonstrates that serious disruptions in the economic well-being of the area occurred during this period.

However, the District did not actually file its request for a temporary exception until July 18, 1979. By that date, gasoline lines in the Washington area had largely disappeared. The preliminary data collected by the Office of Hearings and Appeals during the last two weeks of July and the first week of August did not indicate that the city of Washington was inordinately disadvantaged by the operation of the allocation program at that time. Indeed, the District stated in its request for temporary exception that the data available to it indicated that deliveries of gasoline to the District during July of 1979 would equal 96 percent of deliveries during July of 1978, a substantial improvement on the June delivery ratio. Furthermore, there is no evidence at the present time that the District is experiencing serious supply imbalances or that the economy of the Washington area is seriously and adversely affected by insufficient gasoline supplies.

This situation may of course change in the future. However, we are not persuaded that a sufficient basis exists at this time for the approval of a temporary exception redirecting substantial volumes of gasoline to

the Washington area. As a result, we have reached the tentative conclusion that the District's request should be dismissed without prejudice to a refiling at a later date. Of course, the District might wish to present further data in an effort to demonstrate that it presently meets the criteria set forth above. The District might also wish to challenge these criteria and contend that a different set of criteria should be applied in this case.

We have therefore elected to issue this determination in the form of an Interlocutory Decision and Order. The District will be provided with a period of ten days to consider the course of action which it wishes to take in this proceeding. At the conclusion of that period, the District shall notify the Office of Hearings and Appeals whether it wishes its request for a temporary exception to be dismissed without prejudice to a later refiling. In the event the District acquiesces in a dismissal of that nature, this Interlocutory Order will become the final Order in the present exception proceeding.

It is therefore ordered that: The District of Columbia shall notify the Office of Hearings and Appeals in writing within ten days of the date of this Order whether: (i) it wishes the Application for Temporary Exception which it filed on July 18, 1979 to be dismissed without prejudice to a refiling at a later date; (ii) it wishes to submit comments with respect to the analytic criteria discussed in the Decision accompanying this Order; or (iii) it wishes to submit further data which will enable the Office of Hearings and Appeals to decide its request for Temporary Exception on the basis of the criteria discussed in the Decision accompanying this Order.

Dated: October 12, 1979.

Melvin Goldstein,

Director, Office of Hearings and Appeals.

Table 1.—*Actual Gasoline Deliveries to Washington, D.C., by Month Since January 1976*

[Thousands of barrels]

Month	Total Volume of gasoline delivered	Volume/day	Percentage [1]	Percentage [2]
1976:				
January	401.6	12.95	.....	.....
February	380.2	13.11	1.24	.....
March	416.3	13.43	2.43	.....
April	415.1	13.86	3.23	.....
May	417.9	13.48	(2.74)	.....
June	420.7	14.02	1.04	.....
July	418.9	13.52	(3.57)	.....
August	402.5	12.98	(3.99)	.....
September	390.1	13.00	0.18	.....
October	392.1	12.65	(2.69)	.....
November	420.6	14.02	10.83	.....
December	437.8	14.12	0.71	.....
1977:				
January	382.2	12.33	(12.68)	(4.79)
February	377.4	13.48	9.32	2.82
March	418.8	13.51	0.22	.60
April	408.9	13.63	0.89	(1.66)
May	422.5	13.63	0.00	1.11
June	397.0	13.23	(2.93)	(5.63)
July	399.1	12.87	(2.72)	(0.85)
August	392.9	12.67	(1.55)	(2.39)
September	376.9	12.56	(0.87)	(3.38)
October	368.1	11.87	(5.49)	(6.17)
November	383.5	12.78	7.67	(8.84)
December	411.0	13.26	3.76	(6.09)
1978:				
January	361.3	11.65	(12.14)	(5.52)
February	348.1	12.38	6.09	(8.31)
March	416.9	13.45	8.82	(0.45)
April	369.0	12.30	(8.55)	(9.76)
May	419.3	13.53	10.00	(0.73)
June	402.3	13.41	0.89	1.36
July	429.5	13.85	3.28	7.61

Table 1.—*Actual Gasoline Deliveries to Washington, D.C., by Month Since January 1976*—Continued

[Thousands of barrels]

Month	Total Volume of gasoline delivered	Volume/day	Percentage [1]	Percentage [2]
August	405.2	13.07	5.63	3.16
September	369.2	12.31	(5.81)	(1.99)
October	389.0	12.55	1.95	5.52
November	403.7	13.46	7.25	5.32
December	411.2	13.26	(1.49)	0.00
1979:				
January	409.9	13.22	(0.30)	13.48
February	339.4	12.12	(8.32)	(1.94)
March	415.4	13.40	10.56	(0.37)
April	386.5	12.88	(3.88)	4.72
May	396.9	12.80	(0.62)	(5.40)
June	352.0	11.73	(8.36)	(12.53)

[1] Change from previous month.
[2] Change from same month of previous year.

Table 2.—*Actual Deliveries of Motor Gasoline by State: Comparison of April–June 1978 with April–June 1979* [1]

	April 1979 deliveries / April 1978 deliveries	May 1979 / May 1978	June 1979 / June 1978
State:			
Alabama	1.00	0.96	0.90
Arizona	1.06	1.00	.97
Arkansas	.97	.97	.91
California	1.03	.96	1.01
Colorado	1.05	1.02	.99
Connecticut	.96	.91	.91
Delaware	.84	.84	.84
District of Columbia	1.05	.95	.88
Florida	1.03	1.01	.95
Georgia	1.02	1.01	.98
Idaho	1.01	.96	.94
Illinois	1.02	.99	.90
Indiana	1.01	.99	.90
Iowa	.97	.97	.86
Kansas	1.00	1.04	1.01
Kentucky	1.05	1.00	.93
Louisiana	1.09	1.07	.96
Maine	1.06	.99	.92
Maryland	.98	.96	.88
Massachusetts	1.04	.93	.86
Michigan	.98	.96	.94
Minnesota	.97	.90	.98
Mississippi	.93	.92	.88
Missouri	1.04	1.06	.93
Montana	1.00	1.08	.86
Nebraska	.98	.94	.91
Nevada	1.02	.92	.89
New Hampshire	1.01	.98	.89
New Jersey	.98	1.08	1.05
New Mexico	1.03	.98	.94
New York	.97	.98	.96
North Carolina	.99	.97	.97
North Dakota	.93	.95	.90
Ohio	1.00	1.08	.94
Oklahoma	1.04	1.08	.98
Oregon	1.04	.97	.94
Pennsylvania	.97	.96	.92
Rhode Island	.96	.96	1.00
South Carolina	1.03	.98	.91
South Dakota	1.00	.95	.89
Tennessee	1.03	.98	.94
Texas	.97	1.05	1.10
Utah	1.11	1.15	.93
Vermont	1.01	.93	.90
Virginia	.93	.95	.89

Table 2.—*Actual Deliveries of Motor Gasoline by State: Comparison of April–June 1978 with April–June 1979* [1]—Continued

	April 1979 deliveries / April 1978 deliveries	May 1979 / May 1978	June 1979 / June 1978
Washington	1.02	.98	.94
West Virginia	1.03	1.02	.91
Wisconsin	1.00	1.00	.92
Wyoming	1.09	1.03	.97
U.S. total	1.00	.99	.95

[1] This information was obtained from the motor gasoline delivery data reported by all prime suppliers on DOE form EIA-25 (previously form FEA-1000).

Table 3.—*June 1979 Gasoline Deliveries as a Percentage of June 1978 Gasoline Deliveries, by State*

	June 1979 / June 1978
State:	
Texas	1.10
New Jersey	1.05
Kansas	1.01
California	1.01
Rhode Island	1.00
Colorado	.99
Minnesota	.98
Oklahoma	.98
Arizona	.97
North Carolina	.97
Wyoming	.97
Georgia	.96
Louisiana	.96
New York	.96
Florida	.95
Idaho	.94
Michigan	.94
New Mexico	.94
Ohio	.94
Oregon	.94
Tennessee	.94
Washington	.94
Kentucky	.93
Missouri	.93
Utah	.93
Maine	.92
Pennsylvania	.92
Wisconsin	.92
Arkansas	.91
Connecticut	.91
Nebraska	.91
South Carolina	.91
West Virginia	.91
Alabama	.90
Illinois	.90
Indiana	.90
North Dakota	.90
Vermont	.90
Nevada	.89
New Hampshire	.89
South Dakota	.89
Virginia	.89
District of Columbia	.88
Maryland	.88
Mississippi	.88
Iowa	.86
Massachusetts	.86
Montana	.86
Delaware	.84

Table 4.—*Summary of Data Received for the Cities of Washington, Boston, Milwaukee, and Phoenix* [1]

	Washington	Boston	Milwaukee	Phoenix
Deliveries Directly to Retail Outlets; 1979 Volume as a Percentage of 1978 Volume: [2]				
May	95.4	92.5	101.7	97.4
June	85.7	87.1	85.1	101.6
Total Volume of Gasoline Delivered; 1979 Volume as a Percentage of 1978 Volume: [2]				
May	95.4	91.7	97.3	97.4
June	85.7	86.9	84.9	100.8

Table 4.—*Summary of Data Received for the Cities of Washington, Boston, Milwaukee, and Phoenix* [1] —Continued

	Washington	Boston	Milwaukee	Phoenix
Percentage Reduction in Outlets in Operation from June 1978 to June 1979 [4]	2.0	3.8	0.8	5.4
Percentage of Outlets Which Qualified for Unusual Growth Adjustment in June 1979	20.0	29.5	22.0	53.2

[1] We also requested data for the City of Indianapolis. However, virtually all of the firms which supply gasoline to Indianapolis indicated that they did not possess records which would enable them to provide separate information for gasoline deliveries within the Indianapolis city limits. Instead, each supplier generally furnished data for Marion County, Indiana. Accordingly, we have not included in this Table any separate data for the City of Indianapolis. We did not request data for the City of San Francisco.

[2] No estimate of volumes delivered to jobbers within the city or metropolitan area in question that might have been delivered to retail outlets.

[3] Some of the volumes delivered to jobbers may not have been actually delivered to the city or metropolitan area in question.

[4] Does not necessarily include all outlets supplied by independents and jobbers.

Table 5.—*Summary of Data Received for the Metropolitan Areas of the Six Cities Involved*

	Washington	Boston	Milwaukee	Indianapolis	Phoenix	Oakland/ San Francisco
Deliveries Directly to Retail Outlets; 1979 Volume as a Percentage of 1978 Volume: [1].						
May	94.3	95.5	101.1	98.3	97.5	93.0.
June	84.1	89.6	86.3	91.9	97.4	92.7.
Total Volume of Gasoline Delivered; 1979 Volume As a Percentage of 1978 Volume: [2].						
May	94.7	95.4	92.8	95.7	92.8	90.8.
June	85.3	88.8	84.4	94.9	96.3	88.9.
Percentage Reduction in Outlets in Operation from June 1978 to June 1979: [3].	0.8	1.7	2.2	3.8	2.5	3.0.
Percentage of Outlets which qualified for Unusual Growth Adjustment in June 1979.	13.8	33.0	22.5	13.9	54.1	22.5.
Major Suppliers to Metropolitan Area [4]	Exxon, Amoco, Shell, BP (Sohio), Texaco, Mobil, Crown, Cities, Gulf, Arco.	Mobil, Gulf, Amoco, Sun, Shell, Texaco, Arco, Exxon.	Amoco, Ashland, Mobil, Gulf, Shell, Conoco, Exxon, K.-McGee, Arco, Texaco.	Rock Isl., Shell, Amoco, Marathon, Exxon, Sun, LaGloria, Mobil, Ashland, Gulf.	Chevron, Union, Exxon, Vickers, Powerine, Mobil, Conoco, Arco, Gulf, Texaco.	Chevron, Shell, Arco, Mobil, Union, Texaco, Powerine, Conoco.

[1] No estimate of volumes delivered to jobbers within the city or metropolitan area in question that might have been delivered to retail outlets.

[2] Some of the volumes delivered to jobbers may not have been actually delivered to the city or metropolitan area in question.

[3] Does not necessarily include all outlets supplied by independents and jobbers.

[4] These firms supplied the largest volumes of gasoline to the metropolitan area in question during June 1979, according to the information furnished to us in this proceeding. They are listed in order by the relative volume of gasoline supplied.

Table 6.—*Estimated June Allocation Fractions of Major Gasoline Suppliers*

	Estimated fraction [1]
Firm:	
Marathon [2]	1.00
Total	.959
Hess	.95
Husky	.950
Vickers	.95
Chevron [2]	.903
Boron	.871
Union [2]	.865
Crown Central	.857
Arco [2]	.85
Murphy	.85
TOSCO	.85
Rock Island	.827
Koch	.80
Little America	.80
Mobil [2]	.80
Tenneco	.80
Ashland [2]	.783
Sohio (BP)	.78
Exxon [2]	.78
Shell [2]	.765
Gulf [2]	.762
Champlin	.75
Charter	.75
Clark	.75
Conoco [2]	.749
Diamond Shamrock	.74
Powerine	.713
Sun [2]	.711
Texaco [2]	.704
Getty	.702
Amoco [2]	.70
Phillips [2]	.70
Cities [2]	.68

Table 6.—*Estimated June Allocation Fractions of Major Gasoline Suppliers*—Continued

	Estimated fraction [1]
Kerr-McGee	.672
Triangle	.646
Fina	.554
LaGloria	.524

[1] These June allocation fractions were anticipated during the month of May.

[2] Denotes the 15 largest suppliers of gasoline in the United States during June 1979.

Table 7.—*June 1979 Deliveries as a Percentage of Supply Obligation (Delivery Fraction), by Supplier* [1]

	Actual June 1979 deliveries [2]
Firm:	
Boron	112.6
Chevron [3]	109.5
Marathon [3]	108.7
Triangle	107.3
Little America	105.5
LaGloria	101.1
Husky	98.6
Arco [3]	96.8
Murphy	94.0
Crown Central	93.9
Gulf [3]	93.8
Texaco [3]	93.7
Union [3]	93.7
Phillips [3]	93.1

Table 7.—*June 1979 Deliveries as a Percentage of Supply Obligation (Delivery Fraction), by Supplier* [1] —Continued

	Actual June 1979 deliveries [2]
Rock Island	92.9
PB	91.9
Hess	91.0
Conoco [3]	89.9
Getty	89.1
Tenneco	89.0
Ashland [3]	88.6
TOSCO	88.0
Mobil [3]	87.8
Vickers	86.8
Kerr-McGee	86.4
Shell [3]	83.2
Diamond Shamrock	81.7
Exxon [3]	80.8
Koch	80.4
Amoco [3]	79.4
Clark	79.4
Champlin	78.2
Cities [3]	74.8
Fina	73.6
Sun [3]	69.9
Total	68.9
Charter	63.9
Weighted average	88.3

[1] Since the June 1979 supply obligations were estimated during the month of May, actual supply obligations may have been slightly different. However, it is unlikely that the actual and estimated figures were significantly different.

[2] Divided by estimated June 1979 supply obligation.

[3] Denotes the 15 largest suppliers of gasoline in the United States during June 1979.

Table 8.—*Delivery and Allocation Fractions of Major Suppliers to Each City*

	Estimated June 1979 allocation fraction	Actual June 1979 delivery fraction
Indianapolis		
Firm:		
Rock Island	0.827	92.9
Shell	.765	83.2
Amoco	.70	79.4
Marathon	1.00	108.7
Exxon	.78	80.8
Sun	.711	69.9
LaGloria	.524	101.1
Mobil	.80	87.8
Ashland	.783	88.6
Gulf	.762	93.8
San Francisco/Oakland		
Firm:		
Chevron	.903	109.5
Shell	.765	83.2
Arco	.85	96.8
Mobil	.80	87.8
Union	.865	93.7
Texaco	.704	93.7
Powerine	.713	68.6
Conoco	.749	89.9
Washington, D.C.		
Firm:		
Exxon	.78	80.8
Amoco	.70	79.4
Shell	.765	83.2
Sohio (BP)	.78	91.9
Texaco	.704	93.7
Mobil	.80	87.8
Crown Central	.857	93.9
Cities	.68	74.8
Gulf	.762	93.8
Arco	.85	96.8
Boston		
Firm:		
Mobil	.80	87.8
Gulf	.762	93.8
Amoco	.70	79.4
Sun	.711	69.9
Shell	.765	83.2
Texaco	.704	93.7
Arco	.85	96.8
Exxon	.78	80.8
Phoenix		
Firm:		
Chevron	.903	109.5
Union	.865	93.7
Exxon	.78	80.8
Vickers	.95	86.8
Powerine	.713	68.6
Mobil	.80	87.8
Conoco	.749	89.9
Arco	.85	96.8
Gulf	.762	93.8
Texaco	.704	93.7
Milwaukee		
Firm:		
Amoco	.70	79.4
Ashland	.783	88.6
Mobil	.80	87.8
Gulf	.762	93.8
Shell	.765	83.2
Conoco	.749	89.9
Exxon	.78	80.8
Kerr-McGee	.672	86.4
Arco	.85	96.8
Texaco	.704	93.7

Table 9.—*June 1979 Weighted Average Delivery Fractions, by Metropolitan Area*

	June 1979 delivery fraction
Metropolitan area:	
San Francisco/Oakland	0.9474
Phoenix	.9033
Indianapolis	.8967
Milwaukee	.8635
Boston	.8608
Washington	.8516
U.S. weighted average	.8830

Table 10.—*Estimated June 1979 Weighted Average Allocation Fractions, by Metropolitan Area*

	June 1979 allocation fraction
Metropolitan area:	
San Francisco/Oakland	0.8277
Phoenix	.8207
Indianapolis	.7996
Boston	.7640
Washington	.7610
Milwaukee	.7513
U.S. weighted average	.7790

January 2, 1980.

Interim Decision and Order of the Department of Energy

Name of Petitioner: District of Columbia.
Date of Filing: July 18, 1979.
Case Number: DEN-8329.

Earlier today the Office of Hearings and Appeals issued a Proposed Decision and Order with respect to an Application for Exception filed by the District of Columbia. In that Proposed Decision, we tentatively concluded that an exception should be approved which would increase the volume of gasoline supplied to the District of Columbia in any given month if the District demonstrated that certain criteria had been satisfied. These criteria were initially set forth in an Interlocutory Decision and Order issued to the District on October 12, 1979. *District of Columbia*, 3 DOE Par. — (October 12, 1979). For the reasons set forth in the Interlocutory Order and the Proposed Decision and Order, it is our judgment that the residents of the District experienced a gross inequity and an unfair distribution of burdens during the months of June and July when the District received considerably less gasoline than the national average. In order to ease the burdens which the residents of the District would again experience if a similar situation were to develop, we tentatively concluded that a mechamism should be developed which would provide for an immediate Order increasing the volume of gasoline supplied to the District under certain circumstances. For the reasons set forth in the Proposed Decision and Order, we determined that such an order should be issued if the data presented to the Office of Hearings and Appeals indicated that:

(A)(i) anticipated gasoline delivery data demonstrates that the District will experience a reduction in gasoline supplies during the month in question which is at least 5 percent more than the nationwide reduction in gasoline supplies, when compared with actual volumes delivered during the corresponding month of 1978; *or* (ii) the weighted average allocation fraction of the suppliers to the District is at least 3 percent lower than the average allocation fraction for the entire United States; and

(B)(i) at least 50 percent of all retail outlets in the District sold gasoline for 5.5 hours per day or less during at least 75 percent of days included in a recent sample period of at least four days; *and* (ii) at least 50 percent of all retail outlets in the District experienced a significant gasoline line at least once during 75 percent of the days included in a recent sample period of at least four days. For the purpose of this criterion, a significant gasoline line is defined as a gasoline line in which at least eight vehicles are awaiting service for each side of a service island that is open at the retail outlet in question.

The Proposed Decision contemplates that an immediate Order will be issued increasing the allocation of gasoline to the District if these specific criteria are satisfied in any given month. Such an Order would increase the allocation of gasoline to the District by a minimum of five percent, and would apply for only one month. After reviewing this matter, we have concluded that an Interim Decision and Order should also be approved in order to implement the relief set forth in the Proposed Decision on an immediate basis.

Under the provisions of Section 205.69(a) of the DOE procedural regulations, the Office of Hearings and Appeals is required to consider the following factors in determining whether an Interlocutory Order should be issued:

(i) The probability that exception relief will ultimately be granted;

(ii) The harm an applicant is likely to incur unless exception relief is approved immediately; and

(iii) The harm other persons are likely to incur if the Interim Order is issued.

We believe that a consideration of these factors leads to the conclusion that an Interim Order should be approved in this case. For the reasons set forth in the Proposed Decision, we believe there is a very strong likelihood that exception relief will ultimately be granted to the District. We are also persuaded that the residents of the District might well be unfairly harmed unless exception relief is approved immediately. In view of the recent embargo on crude oil produced in Iran and the unstable worldwide crude oil supply situation, it is conceivable that serious gasoline shortages will again develop in the near future. The District has submitted data in the exception proceeding which convincingly demonstrates that it suffered an unfair distribution of burdens earlier this year. The District should not again be forced to incur the burdens which it

experienced in the past without adequate redress. Under the circumstances and in view of the data submitted by the District and the tentative findings reached in the Proposed Decision and Order, we have concluded that an Interim Order should be issued in this case.

It is therefore ordered that: (1) The provisions of this Order are effective immediately.

(2) Notwithstanding any contrary provisions of the regulations of the Department of Energy, a Supplemental Order will be issued increasing the monthly motor gasoline allocation of the District if the District demonstrates that each of the following criteria have been satisfied at any time during the month in question:

(a)(i) Anticipated gasoline delivery data indicates that the District will experience a reduction in gasoline supplies during the month in question which is at least 5 percent more than the national reduction in gasoline supplies, when compared with actual volumes delivered during the corresponding month of 1978; *or*

(ii) The weighted average allocation fraction of the suppliers to the District is at least 3 percent lower than the average allocation fraction for the entire United States for that month.

(b)(i) At least 50 percent of all retail outlets in the District sold gasoline for 5.5 hours per day or less during at least 75 percent of the days on which they were open that are included in a recent sample period of at least four days; *and*

(ii) At least 50 percent of all retail outlets in the District experienced a significant gasoline line at least once during 75 percent of the days included in a recent sample period of at least four days. For the purpose of this criterion, a significant gasoline line shall be defined as a gasoline line in which at least eight vehicles are awaiting service for each side of a service island that is open at the retail outlet in question.

(3) The Supplemental Order referred to in Paragraph (2): (i) Shall be issued within 5 business days after the Office of Hearings and Appeals possesses information which demonstrates that the criteria set forth in Paragraph (2) have been satisfied;

(ii) Shall apply only to the month in which it is issued; and

(iii) Shall increase the monthly allocation of every retail outlet in the District by 5 percent, or by the percentage necessary to bring the District to the nationwide delivery percentage, whichever is greater; or shall implement other comparable relief.

(4) If the District requests that a Supplemental Order be issued and the Office of Hearings and Appeals concludes that the District has not satisfied the criteria set forth in Paragraph (2) above, the Office of Hearings and Appeals shall notify the District of this conclusion in writing and shall indicate the basis for this conclusion.

(5) If the District files a request for the issuance of a Supplemental Order during the first ten days of any given month, the Office of Hearings and Appeals may in its discretion hold the application in abeyance until the eleventh day of the month. Any such determination to hold the application in abeyance pursuant to this Paragraph shall be based on a finding that the aggregate data available for the analysis of the request will be substantially enhanced by the additional material to be furnished to the DOE by the eleventh day of the month.

(6) As a condition to receiving exception relief pursuant to the Supplemental Order Referred to in Paragraph (3), the District shall demonstrate that it has made a concerted effort to alleviate gasoline supply shortages through the means available to it. Consequently, any request for the issuance of a Supplemental Order shall contain evidence that the District:

(i) Has rationally distributed all set-aside volumes of gasoline available to it;

(ii) Has instituted measures which are designed to reduce gasoline lines, such as odd-even gasoline purchase plans; and

(iii) Has attempted without success to obtain additional gasoline supplies directly from the major gasoline suppliers to the District.

(7) This Order is based on the presumed validity of statements, allegations, and documentary material submitted by the petitioner in connection with its Application for Exception. It may be revoked or modified at any time upon a determination that the factual basis underlying the exception application is incorrect. The DOE may also, by further Order, direct appropriate adjustments or remedial action by the applicant if the determination reached in the final Decision and Order issued with respect to the Application for Exception should differ from the determination reached in the Proposed Decision and Order.

(8) This Order shall remain in effect pending further Order of the Office of Hearings and Appeals or until the Department of Energy issues a final Decision and Order with respect to the Application for Exception filed by the petitioner.

(9) This is an Interlocutory Order subject to appeal only upon the issuance of a final Decision and Order in this matter.

Dated: January 2, 1980.

Melvin Goldstein,

Director, Office of Hearings and Appeals.

[FR Doc. 80-681 Filed 1-9-80; 8:45 am]

BILLING CODE 6450-01-M

federal register

Thursday
January 10, 1980

Part V

Department of Transportation

Federal Highway Administration
Urban Mass Transportation Administration

Interstate System Withdrawal and Substitution; Proposed Revisions

DEPARTMENT OF TRANSPORTATION

Federal Highway Administration

Urban Mass Transportation Administration

23 CFR 450 and 476

[FHWA Docket No. 79-29]

Interstate System Withdrawal and Substitution; Proposed Revisions

AGENCIES: Federal Highway Administration (FHWA) and Urban Mass Transportation Administration (UMTA), DOT.

ACTION: Notice of proposed rulemaking.

SUMMARY: The Federal Highway Administration (FHWA) and the Urban Mass Transportation Administration (UMTA) request comments on proposed revisions to the regulations on the withdrawal of certain nonessential Interstate highway routes from the Interstate System and on the use of funds thus authorized for substitute highway or nonhighway public mass transit projects. These revisions are being proposed to comply with the provisions of the Federal-Aid Highway Acts of 1976 and 1978.

DATES: Comments must be received on or before March 10, 1980.

ADDRESS: Submit written comments to FHWA Docket No. 79-29, Federal Highway Administration, Room 4205, HCC-10, 400 Seventh Street, SW., Washington, D.C. 20590. All comments received will be available for examination at the above address between 7:45 a.m. and 4:15 p.m. ET, Monday through Friday. Those desiring notification of receipt of comments must include a self-addressed stamped postcard.

FOR FURTHER INFORMATION CONTACT: Mr. L. A. Staron, Chief, Interstate Reports Branch, Office of Engineering (202/426-0404) of Mr. Frank Calhoun, Attorney, Office of the Chief Counsel (202/426-0761) in the Federal Highway Administration (FHWA), or in the Urban Mass Transportation Administration (UMTA), Mr. Richard White, Office of Transit Assistance (202/472-6997) or Mr. John Collins, Attorney, Office of the Chief Counsel (202/426-1907), all at 400 Seventh Street, SW., Washington, D.C. 20590. The FHWA hours are from 7:45 a.m. to 4:15 p.m. and UMTA hours are from 8:30 a.m. to 5 p.m. ET, Monday-Friday.

SUPPLEMENTARY INFORMATION: The following is a brief outline of the Interstate transfer process under this proposed regulation. More detailed information can be found elsewhere in this preamble and, of course, in the proposed regulation itself.

Uncompleted or planned highways on the Interstate System in and near urbanized areas can be withdrawn and their funding entitlements can be transferred to other transportation projects under the Interstate transfer provisions first enacted in the Federal-Aid Highway Act of 1973. States and local jurisdictions can use these transfer provisions to resolve controversial Interstate projects and accommodate revised plans for providing urban transportation. Involved, basically, are two major steps: the withdrawal of a nonessential segment of the Interstate System, and the substitution of highway and/or transit projects to serve the area that would have been served by the withdrawn segment.

In order to be considered for withdrawal, a segment of the Interstate System must be within an urbanized area or partially within an urbanized area with portions outside and in close proximity to the same area. The segment can also pass through and connect urbanized areas in a State. Specifically excluded are segments added to the System after May 5, 1976, as substitutes for segments withdrawn under 23 U.S.C. 103(e)(2). Also excluded are open to traffic segments, toll roads incorporated in the System, and routes which were added to the System under 23 U.S.C. 139. Further, the approval of any new Interstate withdrawals is not permitted after September 30, 1983.

The withdrawal request is a joint submittal of the Governor and local governments within whose jurisdiction the Interstate segment would have been located and must include, for the portion of segments within an urbanized area, the concurrence of the metropolitan planning organization (MPO) representing the principal elected officials of the area. The withdrawal sponsors must provide assurance that a toll road will not be constructed in the traffic corridor which would have been served by the segment. The request should be submitted to FHWA and UMTA through the FHWA Division Administrator in the State involved.

The principal Federal decision in an Interstate withdrawal is the determination that the segment is not essential to completion of a unified and connected Interstate System.

Joint approval of a withdrawal by the Federal Highway and Urban Mass Transportation Administrators authorizes an amount from general funds of the U.S. Treasury to be appropriated for substitute projects serving the same area. The amount is computed from the Federal share for completion of the segment, as shown in the latest Interstate Cost Estimate (ICE) approved by Congress, and is adjusted up or down according to price trends in Federal-aid highway construction. This adjustment continues for unobligated funds up to the point that each substitute project under the withdrawal is approved, until the balance of funding authorized by the withdrawal is fully obligated.

General fund appropriations for substitute projects are provided by Act of Congress on an annual basis. The unused substitute funds authorized by the withdrawal are adjusted quarterly for escalation (or deescalation). The adjustments are based on changes in the highway construction price index. The authorizations created by withdrawals remain in force until expended (unless the project deadlines are not adhered to).

Substitute funds may be used in any combination for a wide variety of highway and public mass transit projects. The Federal share for the projects chosen will be 85 percent of the project cost. Highway projects are street and highway improvements on or serving any of the Federal-aid systems described in 23 U.S.C. 103. Transit projects include any undertaking to develop, improve, or purchase public mass transit facilities or equipment (with the exception of operating assistance), such as construction of bus and rail transit facilities and purchase of bus and rail rolling stock, and other transportation equipment.

The 1978 Federal-Aid Highway Act imposes two critical time limitations concerning substitute projects. Substitute projects must receive Federal approval by September 30, 1983, and (providing sufficient Federal funds are available) be under construction or under contract for construction by September 30, 1986. To meet the first time limitation, the proposed regulations call for the submission of a concept program which identifies the proposed substitute projects to be approved. This concept program should be developed by the MPO of the urbanized area (for those projects in or serving that urbanized area) or by the jurisdiction served by a project (for those projects in or serving the nonurbanized area corridor). The concept program should be submitted by the Governor or his/her designee to the Federal Highway Administrator. The Urban Mass Transportation Administrator and the Federal Highway Administrator act

jointly in the review and approval of concept programs.

The second time limitation involves the actual implementation of substitute projects and is therefore dependent on the availability of Federal funding and the completion of any required preliminary steps such as public hearings, environmental impact statements, final design, etc. Subject to the deadlines and funding availability, projects may be advanced for obligation of Federal funds immediately or as they individually become ready.

Governors or their designees submit applications for nonhighway transit projects to the appropriate Urban Mass Transportation Administration (UMTA) Regional Office and for highway projects to the Federal Highway Administration (FHWA) Division Office.

Transit project applications are developed by transit officials for the area or by local governments in consultation with the transit officials. Highway projects are developed by the State or local officials responsible for the highway system and type of improvement involved. Urbanized area (50,000 or more population) projects must be based on the urban transportation planning process for the area and must be selected by the metropolitan planning organization and endorsed in an annual element of a Transportation Improvement Program (TIP/AE). Projects outside an urbanized area must have the concurrence of the responsible officials of the local jurisdictions in which the projects are located. Substitute highway projects, however, need not be processed through the annual statewide program of Federal-aid highway projects.

Substitute project requests for Federal authorization to proceed or for grant approval are processed in the same manner as similar projects programmed under normal FHWA procedures (for highway projects) and UMTA procedures (for nonhighway public mass transit projects).

Legislative Background

These proposed regulations will implement sections 109, 110(a) and 111 of the Federal-Aid Highway Act of 1976 (90 Stat. 425), section 107 of the Federal-Aid Highway Act of 1978 (92 Stat. 2689) and section 2 of the Interstate System amendments (93 Stat. 1075). These sections amended the Interstate withdrawal and substitution provisions of title 23, which were added by the Federal-Aid Highway Act of 1973 and amended by the Federal-Aid Highway Amendments of 1974. The substitution provisions enacted by the 1973 Act were implemented by regulations proposed on March 11, 1974 (39 FR 9522), issued on June 12, 1974 (39 FR 20658, 23 CFR Part 476), and amended on November 8, 1974 (39 FR 39659).

Section 103(e)(2) of title 23, U.S.C., permitted the withdrawal of an Interstate route and the designation of other routes on the System (Howard-Cramer transfer). The 1973 Act provided for withdrawal of any Interstate route or portion thereof selected and approved "prior to the enactment of this paragraph." Section 109 of the 1976 Act amended this provision to make a Howard-Cramer substitution available to any routes added later to the Interstate System, and provided that any State receiving Interstate mileage under section 103(e)(2) must construct it as part of the Interstate System and may not request a withdrawal of this mileage under 23 U.S.C. 103(e)(4). This provision was amended by section 107 of the 1978 Act to prohibit the designation of any new Interstate routes under section 103(e)(2) after the date of enactment and to provide full Interstate funding to all previously designated routes.

Section 103(e)(4) of title 23, U.S.C., as amended by section 110(a) of the 1976 Act, permits the withdrawal of an Interstate route and the substitution of highway and transit projects. Prior law allowed only mass transit projects to be substituted. Section 110(a) also amended section 103(e)(4) to permit the withdrawal not only of a route or portion thereof within an urbanized area as allowed under prior law, but also one which passes through and connects urbanized areas within a State. It further provided that the unobligated portions of a State's apportionment be reduced in the proportion that the cost to complete the withdrawn route bears to the cost of all Interstate routes as reflected in the latest approved Interstate cost estimate. This one-time reduction would occur at the time of the approval of the withdrawal action. Under prior law, the apportionment was reduced by a dollar amount equal to the Federal share of the substitute project as such share became a contractual obligation of the United States.

Section 110(a), to maintain the buying power of substitute funds, also amended the way changes in construction costs are taken into account. These adjustments will be applied at the time of approval of the substitute project or the date of enactment of the section, May 5, 1976, whichever is later, rather than at the time of withdrawal as provided in section 125 of the Federal-Aid Highway Amendments of 1974.

Finally, section 110(a) provided for the retroactive application of the various changes discussed herein to withdrawals approved prior to the enactment of the section.

Section 111 of the 1976 Act amended the Howard-Cramer provision, 23 U.S.C. 103(e)(2), by providing that the nationwide aggregate of costs of substitute projects shall not exceed the nationwide aggregate of costs of withdrawn routes, with the costs of those routes withdrawn after the 1972 Interstate Cost Estimate computed on the basis of costs appearing in the 1972 estimate adjusted to the date of enactment of this Act, May 5, 1976, or the date of withdrawal, whichever is later. In the case of routes withdrawn prior to the 1972 estimate, the costs are computed on the basis of the latest cost estimate in which the withdrawn routes appear, adjusted to May 5, 1976. This amendment was applied to all withdrawals approved under section 103(e)(2) and also to the withdrawals in California approved on August 30, 1965. Section 107(a)(1) of the 1978 Act further amended the Howard-Cramer provision by providing full Interstate funding for route segments added under 23 U.S.C. 103(e)(2).

Section 107(a)(1) also eliminated the previous provision for redesignating additional Interstate System mileage to compensate for the withdrawn mileage by prohibiting any addition to the Interstate System after the date of enactment of the 1978 Act.

Section 107(a)(2) of the 1978 Act changed the maximum Federal share on substitute projects to 85 percent. The funding ratio was previously based on the provisions of 23 U.S.C. 120 applicable to the highway program of which the substitute project would be a part or, for nonhighway mass transit projects, that specified in Section 4 of the Urban Mass Transportation Act of 1964, as amended.

Section 107(b) of the 1978 Act establishes time limits for withdrawals and substitute project approvals. Withdrawals must receive approval by September 30, 1983, unless at the time of enactment of the 1978 Act, the route was under judicial injunction prohibiting construction. Substitute projects must also receive approval by September 30, 1983.

Section 107(e) of the 1978 Act establishes a time limit on substitute project implementation. Substitute projects must be under construction or under contract for construction by September 30, 1986, provided sufficient Federal funds are available. Approval will be withdrawn from, and no funds will be appropriated for, substitute projects not meeting this requirement.

Section 2 of the Interstate System amendments (Pub. L. 96-144) prohibits

the Secretary from approving the withdrawal of any route or portion thereof under the provisions of 23 U.S.C. 103(e)(4) after September 30, 1979, which was open to traffic before the date of the proposed withdrawal.

A detailed explanation of the various revisions of Part 476 as a result of the above amendments follows.

Part 476, Subpart A

Subpart A, which contains definitions, is amended to add or delete certain definitions necessitated by the 1976 Act, 1978 Act, and recent amendments to 23 U.S.C. 103(e)(4) made by Pub. L. 96–144.

The term "initial basic construction" is only used in Subpart B of the regulations. Since Subpart B is to be deleted by this proposal, the definition will no longer be necessary.

The definition of "responsible local officials" has been expanded because of the amendment to 23 U.S.C. 103(e)(4) in section 110(a) of the 1976 Act which permitted the withdrawal of a route within an urbanized area or "which passes through and connects urbanized areas within a State." Under the amended language, part of the withdrawn route could be outside of the urbanized area; accordingly, there is a need for the responsible local officials of rural areas and urban areas not within an urbanized area to be involved in the withdrawal. The definition has been revised to include these officials.

The definition of "nonhighway public mass transit project" has been modified to eliminate the requirement that projects "must be included in and related to a program for the development or improvement of an urban public mass transit system." This transit development program requirement was superseded by the TIP requirement under 23 CFR 450C and 49 CFR 613B.

A definition of "substitute highway project" has been added because of the amendment in section 110(a) of the 1976 Act which permitted use of the substitute funds for any project authorized under "any highway assistance program under section 103" of title 23 as well as for "public mass transit projects," or both highway and transit projects. The definition of the latter terms remains unchanged. As defined, "substitute highway project" means any project which is eligible under the regular Federal-aid highway program and which is on or serving any of the Federal-aid systems described in 23 U.S.C. 103.

A substitute highway project also may include the construction of exclusive or preferential bus lanes, highway traffic control devices, bus passenger loading areas and facilities (including shelters), and fringe and corridor parking facilities to serve bus and other public mass transportation passengers. (See 23 U.S.C. 142(a)(1).)

Another term added is "base cost year." This term is necessary because under section 110(a) and 111(a) of the 1976 Act, the amounts available for substitution are based on Interstate cost estimates of various years (1965, 1968, 1970, etc.), each of which reflects a specific period of price experience. The amounts available under previous legislation could not exceed the cost included in the 1972 cost estimate, increased or decreased based on changes in the cost of construction. The "base cost year" for an Interstate cost estimate is the calendar year specified in the Interstate Cost Estimate manual for that estimate. For example, the base cost year for the 1972 estimate is 1970.

The existing regulations contain no definition of "concurrence." In administering these regulations a number of questions arose as to the varying forms and degrees of concurrences on withdrawals and substitutions making review of the proposals difficult. Accordingly, it was felt that the regulations should specify what constitutes concurrence. "Concurrence" is proposed to mean written agreement which is currently binding on the local governments concerned and which addresses the specific proposal being submitted for approval. In urbanized areas this concurrence must be supplemented by a written agreement which is currently binding on the responsible local officials of the urbanized area and which addresses the specific proposal submitted for approval.

A definition of "open to traffic" has been added because of recent amendments to 23 U.S.C. 103(e)(4) made by Pub. L. 96–144 which prohibits the Secretary from withdrawing open to traffic segments under the provisions of section 103(e)(4) after September 30, 1979. The definition proposed is similar to that which is commonly used by FHWA in describing the Interstate System status of development for routes that have been completed to the extent that the route section has been opened to traffic and for existing freeway segments that were incorporated in the System. This does not include segments of existing highway facilities that are presently acting as the Interstate travelled-way but are ultimately planned to be replaced entirely by a new facility on a new location.

Subpart B

Subpart B of the existing regulations is deleted since the requirements of that subpart have been met. Subpart B required that States provide certain information to the Secretary by June 17, 1974, and more detailed information by July 1, 1975. This information was in relation to Interstate segments for which the State highway departments had not received Federal Highway Administration authorization to advertise for bids for the first major construction work.

Subpart C

Subpart C of the existing regulations is deleted since future designations under this subpart were eliminated by section 107(a)(1) of the 1978 Act. This subpart provided for the Interstate route withdrawals and the redesignation of new routes. The withdrawn mileage plus an additonal 500 miles was available to make modifications or revisions in the Interstate System.

This subpart also limited funding, for redesignated routes, to that made available by the estimated cost of the withdrawn route. This limitation was eliminated by section 107(a)(1) of the 1978 Act. Howard-Cramer routes designated under 23 U.S.C. 103(e)(2) are now eligible for full Interstate funding.

Subpart D

Section 476.300 is amended to reflect the provision of the 1976 Act which allowed highway projects to be substituted for withdrawn Interstate segments in addition to mass transit projects already eligible under the 1973 Highway Act.

Section 476.302(a) is amended by adding new subparagraphs (2) and (3) which allow segments with portions outside urbanized areas to be withdrawn. This amendment is in accordance with section 110(a) of the 1976 Act which added as eligible for withdrawal a segment "which passes through and connects urbanized areas within a State." Subparagraph (2) addresses the eligibility of a segment which has portions within an urbanized area and has portions outside the same urbanized area but in close proximity to that area such as a belt. Subparagraph (3) refers to segments which provide a connection between two urbanized areas within a State.

Subsection (b) describes those segments not eligible for withdrawal. Subparagraph (1) is unchanged from the existing regulations. Subparagraph (2), which prohibits withdrawal of segments added to the Interstate System after May 5, 1976, under 23 U.S.C. 103(e)(2)

(Howard-Cramer), is added in accordance with changes made by section 109(b) of the 1976 Act. Subparagraph (a)(2), of the existing regulations stated that, to be eligible for withdrawal, a segment had to be approved as part of the Interstate System prior to August 13, 1973. This requirement has been eliminated since the 1976 Act removed the statutory limitations to segments approved as part of the Interstate System prior to August 13, 1973.

New subparagraph (3) indicates that Interstate segments designated under 23 U.S.C. 139(a) and (b) are not eligible for withdrawal under this subpart. Paragraph (c) formerly indicated that only those Interstate segments added under 23 U.S.C. 139(a) were not eligible. Subsections (a) and (b) of 23 U.S.C. 139 are similar in that neither creates a Federal financial responsibility and the additional mileage designated under these subsections is not limited by 23 U.S.C. 103(e). Therefore, it is appropriate that the withdrawal ineligibility apply to both subsections rather than (a) only.

New subparagraph (4) prohibits the withdrawal of any toll bridge, tunnel, or approach thereto for which funds were advanced in accordance with 23 U.S.C. 124(b). This prohibition is a requirement of section 118 of the 1978 Act.

New subparagraph (5) prohibits the withdrawal of open to traffic segments after September 30, 1979. This prohibition is a requirement of Section 2 of Pub. L. 96–144.

Paragraph (c) now reflects the intent of Congress for early completion of the Interstate System as expressed in section 107(b) of the 1978 Act. The Act provides that withdrawal requests will not be approved after September 30, 1983, unless the route segment was under judicial injunction prohibiting its construction on the date of enactment of the 1978 Act (November 6, 1978). Applicants are encouraged to submit withdrawal requests by July 30, 1983, to permit Departmental approval by the September 30, 1983, time limitation.

Section 476.304(a) has been amended to clarify that concurrence of responsible local officials is only necessary with respect to urbanized areas. This concurrence is given through the Metropolitan Planning Organization, a structure for areawide transportation planning which is required only for urbanized areas. Thus, joint submittal of a withdrawal request by the Governor and the local governments concerned is sufficient in nonurbanized areas. Withdrawal of a segment connecting two urbanized areas is expected to have the concurrence of the responsible local officials of both areas. Withdrawal requests should be submitted through the FHWA Divison Administrator.

Section 476.304(b) is added to clarify the joint State-local submission process. It permits local governments to concur in the State's proposed withdrawal request rather than literally submit a joint request with the Governor. It also includes the policy established when the present regulations were published that the joint State-local submission requirement does not mean that unanimous approval of all local governments concerned is necessary but rather that the proposed withdrawal has substantial local support. While it is not feasible to prescribe a numerical standard, local officials are expected to act cooperatively to develop proposed actions which will have the support of a substantial majority of those concerned. These decisions will often be of a political and practical nature, reflecting competing interests. The involvement of the metropolitan planning organization will insure a certain regional perspective in actions taken. These regulations are intended to establish only the necessary outer parameters of these actions which must essentially be resolved locally.

In several previous instances, concurrences have been conditioned on future State and local action. This has delayed the Federal review process. To avoid placing the Federal Government in a position of judgement and enforcement in State-local matters, conditional concurrences will be accepted only where the concurring bodies indicate that the conditions have been satisfied or withdrawn. The Governor and local governments concerned are expected to have any differences resolved prior to submission of the withdrawal request.

Section 476.304 (c) sets out those items which must be included in the withdrawal request. Subparagraph (c)(2) replaces subparagraph (b)(3) of the existing regulation, and has been rewritten to conform to section 103(e)(4), as amended by the 1976 Act, which no longer provides for a discussion of whether a segment would be essential due to completion of substitute mass transit projects. The effect that a substitute mass transit or highway project may have on the determination of the essentiality of a route or segment may be incorporated into the general discussion of nonessentiality. Subparagraph (c)(3) is added which requires a statement of mileage and cost. This is required simply to make the withdrawal request as precise a statement as possible and to avoid any misunderstanding. Existing subparagraph (b)(4) requiring a statement of intent to submit a mass transit project is dropped because section 103(e)(4) is no longer limited, due to the amendment in section 110 of the 1976 Act, to substitution of a nonhighway public mass transit project and further there are new time limitations on project approvals and use of the funds which are discussed in sections 476.308 and 476.310.

Section 476.306(a) is amended to require approval of both FHWA and UMTA Administrators on withdrawal requests since the withdrawal approval is, pursuant to Secretarial designation, a joint function of the two agencies. That section also includes a provision that sets forth an established policy that the impact of withdrawal on national defense requirements be considered before approval. The provisions in the existing regulation section 476.306(a)(2) about meeting "the needs of interstate traffic" and providing an "adequate level of intrurban transportation service" are dropped because they are not a specific statutory requirement of section 103(e)(4) and are part of the general "essentiality" determination.

Section 476.306(b) has been rewritten to reflect the method of computing funds available for substitute projects provided in section 125(b) of the 1974 Amendments and amended by section 110 of the 1976 Act. Under this change, the amount made available by the withdrawal of an Interstate segment is the Federal share of the cost to complete the segment (as shown in the latest congressionally approved cost estimate) which is increased or decreased, based on changes in construction costs as of the date of approval of substitute project or May 5, 1976, whichever is later. This replaces the old provision which limited the amounts available to the 1972 estimate of the cost of the withdrawn project. Of course, only unused balances of amounts made available are subject to increase or decrease. This section also states that the measure of cost changes will be the "Composite Index" published quarterly in the FHWA publication, "Price Trends in Federal Highway Construction."

Frequently, in computing the funds available for substitute projects, reductions are made to the Interstate Cost Estimate amount shown for the withdrawn segment to reflect costs the State and local goverments wish to retain in the estimate. These costs normally represent work at the terminus of the withdrawn segment that will remain eligible for Interstate funding (e.g., to provide a connection from a segment remaining on the Interstate System to the local street system). This

is desirable since the work is needed to complete the remaining Interstate facility and the work is eligible for Interstate funding.

The subject matter of existing section 476.306(b) which deals with the source of funds for substitute projects will be address in section 476.314(e).

The June 30, 1981, limit in existing section 476.306(b) on obligations for substitute projects under section 103 (e)(4) has been removed by the 1976 Act, thus a new subsection (c) has been added to provide that the authorizations created by withdrawal of an Interstate segment shall remain available until expended within the limitations established by sections 476.310 (f) and (g).

Subsections (d) and (e) are also added to incorporate changes made by the 1976 Act. Paragraph (d) provides that where an Interstate segment is withdrawn the unobligated balance of the State's Interstate apportionment will be reduced by the same percentage that the Federal share of the cost of the withdrawn route bears to the Federal share of the cost of all uncompleted Interstate routes in that State. This one-time reduction is made as of the date of *withdrawal* and is based on the costs included in the latest Interstate Cost Estimate approved by Congress before withdrawal. This calculation only affects Highway Trust Fund apportionments available for Interstate highway construction and has no effect on the determination of amounts of general funds available for substitute projects. Prior to the 1976 Act, the State's apportionment was reduced dollar for dollar when the substitute project was approved. States which had withdrawals under section 103(e)(4) approved prior to May 5, 1976, have had their apportionment reductions recalculated and the necessary adjustments have been completed.

Paragraph (e) replaces existing section 476.318 regarding redesignation of withdrawn mileage. The 1978 Act prohibits the designation of any mileage as part of the Interstate System after the date of enactment.

Paragraph (f) was added to make reference to 23 CFR 480, Use and Disposition of Property Acquired by States for Modified or Terminated Highway Projects. These regulations were issued to implement section 107(f) of the 1978 Act and describe payback requirements for route segments withdrawn under the subpart.

New paragraph (g) indicates that withdrawn Interstate segments cannot be redesignated under the provisions of 23 U.S.C. 139. To be eligible for designation under 23 U.S.C. 139(a) a route must meet all the standards of a highway on the Interstate System and be considered a logical addition or connection to the Interstate System. Since withdrawn segments have substantial remaining costs to bring them to full Interstate standards it would be inappropriate to redesignate such a withdrawn segment under 23 U.S.C. 139(a). Designation under 23 U.S.C. 139(b) requires that a route must qualify for such designation in the same manner as set forth in 23 U.S.C. 103(e) (1). As approval of the withdrawal of a route segment under the provisions of 23 U.S.C. 103(e)(4) requires a determination that the segment is not essential to the completion of a unified and connected Interstate System, it is considered inappropriate to redesignate the same segment as part of the Interstate System under the provisions of 23 U.S.C. 139(b).

Section 476.308 of the existing regulations has been renumbered 476.310 to accommodate a new section that requires concept approvals for substitute projects. This new step in the development of substitute projects is necessitated by the time limitations established by subsections 107(b) and 107(e) of the 1978 Act. Subsection 107(b) prohibits the Secretary from approving substitute projects after September 30, 1983. Subsection 107(e) requires the Secretary to withdraw approval of substitute projects that are not under construction or contract for construction by September 30, 1986.

New paragraph 476.308(a) requires the submission of a concept program which identifies the proposed substitute projects. This serves to fulfill the September 30, 1983, time limitation for substitute project approvals. This should be done as soon as practicable following the withdrawal of an Interstate route and is also applicable to routes withdrawn prior to the effective date of these regulations for which funding remains available. Applicants are encouraged to submit concept programs by July 30, 1983, to permit Departmental approval of project concepts by the September 30, 1983, time limitation. The concept program must, as a minimum, account for all funding made available by the withdrawal (or the remaining funds for previous withdrawals).

Paragraph (a) requires that the concept program be submitted by the Governor or his/her designee in the same manner as Interstate System withdrawal requests and that project concepts included in the concept program be selected under the procedures provided in section 476.310 (b) and (c). These requirements will insure that the project concepts included reflect the needs and desires of State and local governments.

Paragraph (a) lists the information which must be included in the concept program submission. This information will include the anticipated split, if any, between transit and highway projects and a concept description of the proposed substitute projects for which concept approval is requested in sufficient detail to identify the projects at later development stages. The program submission should also include a summary of the anticipated funding level by fiscal year, separated by estimates for transit and highway projects. The program information should include the expected source of non-Federal funds as well as identification of the recipient and State and local agencies responsible for carrying out the substitute projects. The information to be included in this submission is needed to develop budget proposals and to identify those projects which may be authorized or submitted for approval from September 30, 1983, to September 30, 1986.

New paragraph (b) indicates that concept approval for subsitute projects must be given jointly by the FHWA and UMTA Administrators by September 30, 1983, in accordance with the time limitation established by section 107(b) of the 1978 Act. This time limitation does not apply to substitute projects relating to Interstate segments which were under court injunction prohibiting construction on November 6, 1978. However, the construction time limitation, as discussed in section 476.310(g), does apply to these segments. The paragraph indicates that adjustments and refinements to the approved concepts may be permitted after September 30, 1983. These modifications may become necessary as more detailed plans are developed and funding needs are more accurately determined. Updated programs will also facilitate the preparation of budget proposals reflecting the most recent needs. All such modifications must be related to previously approved project concepts. A general disclaimer indicates that approval of a project concept does not obligate funds or establish eligibility for projects. This is done on an individual project basis as described later in this preamble. Submission of a project concept does not commit State and local government to fully implement the project.

Paragraph (b) also indicates that concept approval is not a major Federal action covered by the requirements of the National Environmental Policy Act. Since concept approval does not imply a

commitment to funding a substitute project, environmental and other requirements (including the consideration of alternatives) for these projects will be met in the normal course of development of the individual projects.

Section 476.310 has been expanded by including the provisions previously contained in section 476.308 and contains a number of changes imposed by the 1976 and 1978 Acts. This section is also desinged to clarify the process of selecting and developing substitute projects. Since the 1976 Act allows withdrawal of segments in "connecting nonurbanized area corridors," and allows substitution of highway as well as mass transit projects, the thrust of proposed section 476.310 is to describe the elements of a fair decisionmaking process regarding substitute projects. Paragraph (a) states that a substitute project must serve the area from which the Interstate segment was withdrawn. This does not require that the substitute project be located along the same right-of-way as the withdrawn route, but that it should serve that same area which would have been served by the Interstate segment. In the case of withdrawals of segments in urbanized areas, the substitute projects must serve the same urbanized area; in the case of a segment withdrawn from one or more urbanized areas and a connecting urbanized area corridor, the total package of substitute projects must serve the needs of each area, although each substitute project need not individually serve the needs of each area.

Paragraph (b) of section 476.310 requires substitute projects in or serving urbanized areas to be based on an urban transportation planning process under Subpart A of the joint FHWA/UMTA planning regulations (23 CFR Part 450). Consistency with all elements of this planning process is considered of vital importance to the development of substitute projects. Included in the process are evaluation of alternative transportation systems management improvements and analysis of alternative transportation investments which are required under 23 CFR 450.120(a)(8).

Paragraphs (b) and (c) also require, in accordance with 23 U.S.C. 103(e)(4), that all substitute projects, highway or transit, shall be "selected by responsible local officials of the urbanized area or areas to be served." In urbanized areas, this selection will be made in accordance with Subpart C of the joint planning regulations (23 CFR 450) which prescribe guidelines for initiation (23 CFR 450.310) and selection of projects (23 CFR 450.318) to be included in the annual element (23 CFR 450.312) of the transportation improvement program (TIP). Corresponding changes to the TIP regulations are also being proposed to incorporate procedures regarding substitute highway projects. In addition, special provision is made for selection of a project which is located outside the urbanized area but which serves the urbanized area, to include the concurrence of responsible local officials of those jurisdictions in which the project is to be located. In accordance with the 1976 Act (section 110(a)), a project in or serving a nonurbanized corridor is required by section 476.310(c) to be selected by the responsible local officials of a jurisdiction served by the project. Under the existing regulations, such local selection only applies to highway and transit projects utilizing Federal-aid urban system funds. In addition, special provision is made to include the concurrence of the responsible local officials of the jurisdictions in which these projects are located.

Paragraph (d) addresses the development of substitute projects, i.e., that phase of a project between selection by the responsible local officials and submission by the Governor. This phase includes activities such as preliminary engineering, environmental analysis, and public hearings. For highway projects, this includes all the activities associated with the development of Plans, Specifications and Estimates (23 U.S.C. 106; 23 CFR Part 630, Subpart B). For transit projects, it is the stage of perfecting the application in accordance with the requirements of the Urban Mass Transportation Act. The development of transit projects is to be done either by the local jurisdictions in consultation with local transit officials, or by the transit officials for that area. Highway projects are to be developed according to existing policies and procedures for the Federal-aid system and submitted through the Federal Highway Administration Division Administrator.

This paragraph also provides that substitute highway projects need not be included in the statewide program of projects under 23 CFR Part 630. Under section 476.310(e), projects are submitted to either FHWA or UMTA directly by the Governor; therefore, the process described in Subpart A of Part 630 whereby the State highway agency submits the annual program to FHWA is inappropriate to the processing of substitute projects. Requests for substitute highway projects should be submitted through the FHWA Division Administrator and requests for substitute transit projects should be submitted through the UMTA Regional Director.

The submission of substitute projects by the Governor represents the culmination of many activities which are not specified by the proposed regulations in the interest of retaining maximum flexibility. Although the projects are selected by responsible local officials, the Governor and his/her designees retain a major role in the administration of project planning, programming and development. The regulations are based on the presumption that procedures will be developed within a State to cover such matters as preliminary project concept approval, proportional distributions between urbanized areas and nonurbanized area corridors, programming of projects serving nonurbanized area corridors, and allocation of project development assignments.

Paragraph (f) is added to reflect the time limitation established by section 107(b) of the 1978 Act which prohibits approval of any substitute project after September 30, 1983. After September 30, 1983, only projects which have previously received concept approval in accordance with section 476.308 should be submitted since this is a prerequiste for approval.

Paragraph (g) is added to implement the substitute project construction time limit established by section 107(e) of the 1978 Act. This section requires that substitute projects (for which sufficient Federal funds are available) must be under construction or contract for construction by September 30, 1986. This time limitation applies to all projects, including those related to Interstate segments which were under court injunction prohibiting construction on November 6, 1978. Approval for projects not meeting this time limitation will be withdrawn or not issued and no funds will be appropriated or authorized.

Section 476.312 is revised to reflect the expansion of eligible substitute projects to include highway projects. Under this section, any substitute project can be combined with a project utilizing funds from the Urban Mass Transportation Act, 23 U.S.C. 104, or other sources, to constitute an undertaking larger than could be done by utilizing solely the funds made available by withdrawal of the Interstate segment. This section makes it clear that the amount made available by the withdrawal does not limit the size of the proposed project

which would incorporate substitute funds.

Proposed section 476.314 would cover material now covered by sections 476.314 and 316 of the existing regulations regarding both review and approval of substitute projects. It provides that the UMTA Administrator will review all nonhighway public mass transit projects, and the FHWA Administrator shall review all substitute highway projects, which include highway public mass transit projects (e.g., busways, exclusive or preferential bus lanes, bus passenger loading areas, etc.).

The elements of review in section 476.314 have also been changed to reflect the 1976 Act. The review must determine whether projects serve the urbanized area, connecting nonurbanized area corridor, or both. The portion of the preamble above which covers proposed section 476.310 discussed the geographic location requirements for substitute projects.

Paragraph (a)(2), covering cost of proposed projects, has been revised to reflect 1974 Amendments and 1976 Act changes in the determination of substitute project funds made available by a withdrawal. These changes have been described earlier in this preamble, in the discussion of proposed section 476.306(b).

Paragraph (b) refers to restrictions on the obligations of funds imposed by section 155 of the 1976 Act and the Congressional Budget and Impoundment Control Act of 1974 (Pub. L. 93–344). Briefly, this requires that no new (nontrust fund) funds can be obligated in a fiscal year except to the extent provided in appropriations acts for that year.

Paragraphs (c) and (d) revise the approval provisions of existing section 476.316(a). For nonhighway public mass transit projects, approval will be made in accordance with the policies and procedures established for the UMTA Section 3 capital grant program. For highway projects, approval will be in accordance with existing policies and procedures of the Federal-aid highway program, except that the inclusion of a substitute project in the annual program of projects under 23 CFR 630.112 is not required.

Paragraph (e) simply states the requirement of the 1976 Act that *all* substitute projects, mass transit or highway, are paid for out of general funds of the Treasury. Substitution projects are not funded out of the Highway Trust Fund.

New paragraph (f) implements the amendment to section 103(e)(4) of title 23, U.S.C. providing that the Federal share of each project is not to exceed 85 percent, regardless of the type of substitute project, the Federal-aid system being improved, or the amount of public lands in the State.

New paragraph (g) states that the labor protective provisions of Section 3(e)(4) of the UMT Act of 1964, as amended, are applicable to nonhighway public mass transit substitute projects.

Part 450

Proposed revisions to the amendments to Part 450, Subpart C, Transportation Improvement Program are needed to complement the previously discussed revisions being proposed for urbanized area Interstate substitution projects. The primary effects of the changes would be to include substitute highway projects and alter the portion of the program approval process which follows endorsement of the Transportation Improvement Program (TIP) by the metropolitan planning organization (MPO). The Federal-Aid Highway Act of 1976 extended the scope of projects eligible for substitution for Interstate highway segments withdrawn under subsection (e)(4) of section 103 of title 23, U.S.C. Eligible projects may not include projects authorized under any highway assistance program under this section. The proposed revisions to Part 450 of 23 CFR are intended primarily to accommodate this change. The cooperative process by which projects in urbanized areas are advanced for consideration and included in the annual element of the TIP would not be changed.

To effect this revision, section 450.310(f) is proposed to be added to allow substitute highway projects to be initiated for inclusion in the TIP in the same manner as other highway projects on the same Federal-aid system. This would recognize that projects on each highway system are subject to differences in initiation responsibility.

Selection of Interstate substitution highway projects for an urbanized area by responsible local officials would be evidenced by inclusion of the projects in the annual element of the TIP endorsed by the MPO, as is now the case for other urbanized area projects.

Conforming changes are also proposed to the regulations of 23 CFR 450 at sections 450.318(b)(1) and 450.320(a)(2) to eliminate the statewide program requirement for substitute projects. As discussed above for section 476.310(d), the Governor's submission of a transportation project application or a request for authorization to proceed with a highway project guarantees a State role in the project development process. In addition, 450.318(a) and 450.320(a)(2) have been revised to clarify that Interstate substitution nonhighway public mass transit projects located in urbanized area submitted to UMTA for approval must be included in the annual element of the TIP.

Technical amendments are proposed to reflect the discontinuation of Federal-aid secondary system extensions in urban areas effective July 1, 1976, and the consolidation of apportionments for the Federal-aid primary system (including extensions in urban areas) beginning with the fiscal year 1977 apportionment. Sections affected would be 450.302(a)(4) and 318(b)(2) and (b)(3).

Inquiries, comments, views and arguments received on these proposed regulations may be submitted to Docket No. 79–29, Federal Highway Administration, Room 4205, HCC–10, 400 Seventh Street, SW., Washington, D.C. 20590. All written communications will be considered before final action is taken on this proposal. Copies of all written communications received will be available for examination during normal business hours at the foregoing address.

These amendments to title 23, Code of Federal Regulations, are proposed under the authority of 23 U.S.C. 103(e)(2), 103(e)(4), 104(f), 134, and sections 3, 4 (a) and (g), and 8 of the Urban Mass Transportation Act (49 U.S.C. 1602, 1603(a), and 1604), and the delegation of authority by the Secretary of Transportation at 49 CFR 1.48(b) and 1.51(f).

In consideration of the foregoing, it is proposed to amend Part 476 and Part 450, Chapter I of title 23 of the Code of Federal Regulations as set forth below.

Note.—The FHWA and UMTA have determined that this document contains a significant proposal according to the criteria established by the Department of Transportation pursuant to E.O. 12044. A draft regulatory analysis is available for inspection in the public docket and a copy may be obtained by contacting Mr. L. A. Staron of the program office at the address specified above.

Issued on: January 3, 1980.

Theodore C. Lutz,

Urban Mass Transportation Administrator.

Karl S. Bowers,

Federal Highway Administrator.

PART 476—INTERSTATE HIGHWAY SYSTEM

Subpart A—General

Sec.

476.2 Definitions.

Subpart B—[Reserved]

Subpart C—[Reserved]

Subpart D—Withdrawal of Interstate Segments and Substitution of Public Mass Transit or Highway Projects or Both

Sec.
476.300 Purpose.
476.302 Applicability.
476.304 Withdrawal request.
476.306 Withdrawal approval.
476.308 Concept approval for substitute projects.
476.310 Proposals for substitute public mass transit and highway projects.
476.312 Combined proposal.
476.314 Administrator's review and approval of substitution projects.

Authority: 23 U.S.C. 103(e)(4) and 315; 49 CFR 1.48(b) and 1.51(f).

Subpart A—General

§ 476.2 Definitions.

(a) Except as otherwise provided, terms defined in 23 U.S.C. 101(a) are used in this part as so defined.

(b) The following terms, where used in the regulations in this part, have the following meaning—

(1) "Base cost year" for the latest Interstate System cost estimate approved by Congress shall be the calendar year specified in the Interstate Cost Estimate Manual [1] for that estimate. For example, the base cost year for the 1972 Estimate is 1970.

(2) "Concurrence" means written agreement which is currently binding on the local governments concerned and which addresses the specific proposal being submitted for approval. In urganized areas, in addition to the above, concurrence means written agreement which is currently binding on the responsible local officials of the urbanized area and which addresses the specific proposal being submitted for approval.

(3) "Interstate segment" means any designated, toll-free route or portion thereof, of the Interstate System.

(4) "Local governments concerned" means local units of general purpose government under state law within whose jurisdiction the Interstate segment lies, or is to be withdrawn.

(5) "Open to traffic" means a segment is available to normal Interstate traffic.

(6) "Responsible local officials" means:

(i) In urbanized areas, principal elected officials of general purpose local governments acting through the Metropolitan Planning Organization in accordance with part 450, Subpart A of this title, and;

(ii) in rural areas and urban areas not within any urbanized area, principal elected officials of general purpose local governments.

(7) "Substitute highway project" means any undertaking for highway construction, which may encompass phases of work including preliminary engineering, right-of-way, and actual construction, individually or any combination thereof, on or serving any of the Federal-aid systems described in 23 U.S.C. 103 and which is eligible for Federal financial assistance under title 23, U.S.C. A substitute highway project may also include the construction of exclusive or preferential bus lanes, highway traffic control devices, bus passenger loading areas and facilities (including shelters), and fringe and corridor parking facilities to serve bus and other public mass transportation passengers.

(8) "Substitute nonhighway public mass transit project" means any undertaking to develop or improve public mass transit facilities or equipment. A project may involve the construction of fixed rail facilities or the purchase of passenger equipment including rolling stock, for any mode of mass transit, or both.

Subpart B—[Reserved]

Subpart C—[Reserved]

Subpart D—Withdrawal of Interstate Segments and Substitution of Public Mass Transit or Highway Projects or Both

§ 476.300 Purpose.

The purpose of the regulations in this subpart is to prescribe policies and procedures for implementation of 23 U.S.C. 103(e)(4), which permits the withdrawal of Interstate System segments and the substitution of public mass transit or highway projects or both.

§ 476.302 Applicability.

(a) Except as provided in paragraph (b) of this section, this subpart applies to an Interstate segment at any stage of development if:

(1) The segment is within an urbanized area; or

(2) The segment has portions within an urbanized area and has portions outside the same urbanized area but in close proximity to that area; or

(3) The segment passes through and connects urbanized areas within a State.

(b) The regulations in this subpart shall not apply to:

(1) A segment removed from the Interstate System prior to August 13, 1973;

(2) A segment added to the Interstate System after May 5, 1976, under the provisions of 23 U.S.C. 103(e)(2);

(3) Interstate segments designated under 23 U.S.C. 139;

(4) A toll bridge, tunnel, or approach thereto for which funds were advanced in accordance with 23 U.S.C. 124(b); or

(5) After September 30, 1979, an Interstate segment open to traffic before the date of the proposed withdrawal.

(c) Withdrawal requests may not be approved under this subpart after September 30, 1983, unless the route segment was under a court injunction prohibiting its construction as of November 6, 1978. For segments under such injunction, withdrawal requests may not be approved under this subpart after September 30, 1986. However, as indicated in section 476.310(g), the September 30, 1986, substitute project construction time limitation remains applicable to these segments.

§ 476.304 Withdrawal request.

(a) A request to withdraw an Interstate segment within A State under this subpart shall be submitted jointly by the Governor and local governments concerned. For those segments within urbanized areas, the concurrence of responsible local officials is also required. The withdrawal request shall be submitted to the Federal Highway Administrator and the Urban Mass Transportation Administrator, through the Federal Highway Administrator.

(b) Joint submittal may be accomplished by a single request prepared by the Governor and concurred in by the local governments concerned. This may also be accomplished by a request by the Governor with separate concurrence documentation by the local governments concerned. While unanimous local action is not required, the withdrawal request is expected to have substantial support.

(c) The request for withdrawal shall include the following: (1) A statement that the request is filed pursuant to 23 U.S.C. 103(e)(4).

(2) Reasons why the segment is not essential to the completion of a unified and connected Interstate System.

(3) A detailed statement of mileage and cost of the segment to be withdrawn as included in the latest Interstate cost estimate approved by Congress.

(4) An assurance that a toll road will not be constructed in the traffic corridor which would be served by the segment.

[1] The "Instructional Manual for the Preparation and Submission of the (*Year*) Estimate of the Cost of Completing the Interstate System in Accordance with § 104(b)(5) of the Title 23, U.S.C., Highways," published by the Federal Highway Administration, U.S. Department of Transportation, is available for insection and copying as prescribed in 49 CFR Part 7, Appendix D.

§ 476.306 Withdrawal approval.

(a) The Federal Highway Administrator and the Urban Mass Transportation Administrator may approve the withdrawal of an Interstate segment under the provisions of this subpart, after considering the impact of the withdrawal on national defense needs if:

(1) The requirements of § 476.304 are met; and

(2) The Federal Highway Administrator determines that the segment is not essential to completion of a unified and connected Interstate System.

(b) When the withdrawal of an Interstate segment is approved under paragraph (a) of this section, an amount equal to the Federal share of the cost to complete the withdrawn segment as shown in the latest Interstate System cost estimate approved by Congress is authorized for substitute projects. The amount authorized will be increased or decreased, as determined by the Federal Highway Administrator, based on changes in construction costs of the withdrawn route occurring between the base cost year of the latest cost estimate approved by Congress which included the costs of the withdrawn route and May 5, 1976, or the date of approval of each substitute project, whichever is later. The changes in construction costs will be computed on the basis of the Composite Index shown in the quarterly publication "Price Trends for Federal-Aid Highway Construction" prepared by the Federal Highway Administration. For purposes of cost adjustments, the Composite Index for the second calendar quarter of 1976, or for the calendar quarter within which the approval of the substitute project occurs, whichever is later, will be used in computing the change in construction costs.

(c) Authorizations of funds made available by the withdrawal of an Interstate route under 23 U.S.C. 103(e)(4) shall remain available until expended within the limitations described in § 476.310 (f) and (g).

(d) Effective as of date of approval of the withdrawal of an Interstate segment, the unobligated apportionments for the Interstate System of the State receiving the approval will be reduced in the proportion that the Federal share of the cost of the withdrawn segment bears to the Federal share of the total cost of all Interstate routes in the State as reported in the latest Interstate System cost estimate approved by Congress.

(e) Mileage withdrawn under the provisions of this subpart may not be redesignated in any State under any provision of title 23, U.S.C.

(f) The payback of Federal-aid Interstate funds expended on a segment withdrawn under this subpart shall be governed by 23 CFR Part 480, Use and Disposition of Property Acquired by States for Modified or Terminated Highway Projects.

(g) Segments withdrawn under the provisions of this subpart may not be redesignated under the provisions of 23 U.S.C. 139.

§ 476.308 Concept approval for substitute projects.

(a) A concept program which identifies the proposed substitute projects to be approved in concept and which, as a minimum, accounts for all unobligated funding made available by this subpart must be submitted as soon as practicable after the effective date of this subpart or after a withdrawal is formally approved.

(1) The substitute project concepts included in the program must be selected in a manner consistent in the procedures provided in Sections 476.310 (b) and (c).

(2) The concept program submission must contain: (i) A proposed split, if any, of Interstate withdrawal authorizations between transit and highway projects;

(ii) A concept description (e.g., type of work, termini, length, estimated cost, number and type of vehicles, size and type of facility, identification of major transportation investment, etc.) of the proposed transit and/or highway projects for which concept approval is requested; and

(iii) A summary of the anticipated level of funding needs by fiscal year, as estimated on a project-by-project basis for transit and highway projects.

(3) The concept program should be submitted by the Governor or his/her designee to the Federal Highway Administrator and the Urban Mass Transportation Administrator, through the Federal Highway Administrator.

(b) Approval of substitute project concepts must be given jointly by the Federal Highway Administrator and the Urban Mass Transportation Administrator by September 30, 1983. This time limitation does not apply to segments which were under court injunction prohibiting construction as of November 6, 1978.

(1) Adjustments and refinements to the project concepts approved may be permitted after September 30, 1983.

(2) Approval of the project concepts does not commit funding under this subpart nor does such approval constitute an obligation on the State or local governments to fully implement the project concepts. Approval of a project concept is not considered a major Federal action under the National Environmental Policy Act of 1969, as amended.

§ 476.310 Proposals for substitute public mass transit and highway projects.

(a) The proposed substitute projects must serve the urbanized area or connecting nonurbanized area corridor, or both, from which the Interstate segment was withdrawn.

(b) Substitute projects in or serving urbanized areas shall be based on an urban transportation planning process in accordance with 23 CFR Part 450, Subpart A, and shall be selected by the responsible local officials of the urbanized area in accordance with 23 CFR Part 450, Subpart C. Substitute projects located outside the urbanized area but serving the urbanized area shall also have the concurrence of the responsible local officials of the jurisdiction in which the project is located.

(c) Substitute projects in or serving the nonurbanized area corridor shall be selected by the responsible local officials of the jurisdiction to be served with the concurrence of the responsible local officials of the jurisdiction in which the project is located.

(d) Applications for substitute nonhighway public mass transit projects shall be developed either by the principal elected officials of general purpose local units of government in consultation with local transit officials or by local transit officials. Substitute highway projects shall be developed in accordance with the policies and procedures established for the Federal-aid highway system of which they will be a part. Substitute highway projects need not appear in the statewide Federal-aid program described in 23 CFR Part 630, Subpart A.

(e) Applications for substitute nonhighway public mass transit projects shall be submitted to the Urban Mass Transportation Administrator by the Governor. Requests for authorization to proceed with substitute highway projects shall be submitted to the Federal Highway Administrator by the Governor.

(f) After September 30, 1983, only applications for those substitute projects which have previously received concept approval under § 476.308 should be submitted.

(g) Substitute projects (for which sufficient funds are available) must be under construction or under contract for construction by September 30, 1986. For substitute projects which do not involve construction (for which sufficient funds

are available), an obligation of funds for the project must have occurred by September 30, 1986. This time limitation is applicable to all substitute projects, including those related to Interstate segments which were under court injunction prohibiting construction on November 6, 1978. Approval for substitute projects not meeting this requirement will be withdrawn or not issued, and no funds will be appropriated or authorized for these projects.

§ 476.312 Combined proposal.

A proposal for one or more substitute projects may be combined with projects utilizing other Federal funds available including, but not limited to, financial assistance available under either the Urban Mass Transportation Act of 1964, as amended, or 23 U.S.C. 104. Only the funds available from a withdrawal under this subpart are constrained by the limiting amount described in § 476.306(b).

§ 476.314 Administrator's review and approval of substitute projects.

(a) The Urban Mass Transportation Administrator shall review substitute nonhighway public mass transit projects and the Federal Highway Administrator shall review substitute highway projects to determine that the projects meet the following requirements.

(1) The proposed projects serve the urbanized area or connecting nonurbanized area corridor or both from which the Interstate segment was withdrawn.

(2) The Federal share of the costs of the proposed projects which is to be provided under this subpart by virtue of the withdrawal of an Interstate segment does not exceed the Federal share of the cost of the withdrawn segment, as determined in § 476.306(b).

(b) Approval of substitute projects can be given only to the extent that authority to obligate the funds is available.

(c) For substitute nonhighway public mass transit projects, the approval of the plans, specifications, and estimates of a project, or any phase thereof, shall be deemed to occur on the date the Urban Mass Transportation Administrator approved the substitute project or phase thereof in accordance with the policies and procedures established for the UMTA section 3 capital grant program.

(d) Substitute highway projects will be approved by the Federal Highway Administrator in accordance with policies and procedures established for the Federal-aid highway program.

(e) Approval of a substitute project or phase thereof obligates the United States to pay its proportional share of the cost of the project or phase thereof out of the general funds in the Treasury.

(f) The Federal share for substitute projects approved after November 6, 1978, shall not exceed 85 percentum.

(g) The labor protective provisions of Section 3(e)(4) of the UMT Act of 1964, as amended, (49 U.S.C. Section 1602(e)(4)) are applicable to nonhighway public mass transit projects funded under the provisions of this subpart.

Transportation Improvement Program; Proposed Amendments

PART 450—PLANNING ASSISTANCE AND STANDARDS

It is proposed to amend Subpart C of Part 450, Chapter I of title 23, Code of Federal Regulations, as follows:

1. By revising § 450.320(a)(4) to read as follows:

§ 450.302 Applicability.

(a) * * *

(4) 23 U.S.C. 104(b)(1) (projects on extensions of primary systems in urbanized areas), except as provided in this subpart;

* * * * *

2. By revising the definition of "Interstate substitution projects" in § 450.304 *Definitions* to read:

* * * * *

(b) * * *

"Interstate substitution projects" means projects funded under 23 U.S.C. 103(e)(4) (Withdrawal of Interstate segments and substitution of either nonhighway public mass transit projects or highway projects, or both).

* * * * *

§§ 450.310, 450.318, and 450.320 [Amended].

3. By revising §§ 450.310(b), 450.318(b)(1), and 450.320(a)(1) to delete the phrase "nonhighway public mass transportation projects" wherever it appears therein and to substitute in lieu thereof the words "nonhighway public mass transit projects."

4. By revising § 450.310 to add a new paragraph (f) as follows:

§ 450.310 Annual element: project initiation.

* * * * *

(f) Proposed Interstate substitution highway projects shall be initiated according to the provisions of this section for the Federal-aid system of which they will be a part.

§ 450.318(a) [Revised].

5. By revising § 450.318(a) to read:

(a) The projects proposed to be implemented with Federal assistance under sections 3 and 5 of the Urban Mass Transportation Act (49 U.S.C. 1602 and 1604) and nonhighway public mass transit projects under 23 U.S.C. 103(e)(4) shall be those contained in the annual element of the transportation improvement program submitted by the MPO to the Urban Mass Transportation Administrator.

§ 450.318(b)(1), (2), and (3) [Amended].

6. By revising § 450.318(b)(1) to delete the words "and 103(e)(4) (Withdrawal of Interstate segments and substitution of public mass transportation projects)".

7. By revising § 450.318(b)(2) to delete the words "104(b)(3) (Extensions of Federal-aid primary and secondary systems)" and substitute in lieu thereof the words "104(b)(1) (Projects on urban extensions of the Federal-aid primary system)".

8. By revising § 450.318(b)(3) to delete the words "104(b)(3) (Projects on urban extensions of the primary and secondary systems)" and substitute in lieu thereof the words "104(b)(1) (Projects on urban extensions of the primary system)".

§ 450.320 [Amended].

9. By revising § 450.320(a)(2) to delete "included in the statewide program of projects under 23 U.S.C. 105" and substitute in lieu thereof the words "included in the annual element of the transportation improvement program".

[FR Doc. 80-844 Filed 1-9-80; 8:45 am]
BILLING CODE 4910-22-M

Reader Aids

Federal Register

Vol. 45, No. 7

Thursday, January 10, 1980

INFORMATION AND ASSISTANCE

Questions and requests for specific information may be directed to the following numbers. General inquiries may be made by dialing 202-523-5240.

Federal Register, Daily Issue:

202-783-3238	Subscription orders (GPO)
202-275-3054	Subscription problems (GPO)
	"Dial-a-Reg" (recorded summary of highlighted documents appearing in next day's issue):
202-523-5022	Washington, D.C.
312-663-0884	Chicago, Ill.
213-688-6694	Los Angeles, Calif.
202-523-3187	Scheduling of documents for publication
523-5240	Photo copies of documents appearing in the Federal Register
523-5237	Corrections
523-5215	Public Inspection Desk
523-5227	Index and Finding Aids
523-5235	Public Briefings: "How To Use the Federal Register."

Code of Federal Regulations (CFR):

523-3419	
523-3517	
523-5227	Index and Finding Aids

Presidential Documents:

523-5233	Executive Orders and Proclamations
523-5235	Public Papers of the Presidents, and Weekly Compilation of Presidential Documents

Public Laws:

523-5266	Public Law Numbers and Dates, Slip Laws, U.S.
-5282	Statutes at Large, and Index
275-3030	Slip Law Orders (GPO)

Other Publications and Services:

523-5239	TTY for the Deaf
523-5230	U.S. Government Manual
523-3408	Automation
523-4534	Special Projects
523-3517	Privacy Act Compilation

FEDERAL REGISTER PAGES AND DATES, JANUARY

1-756 2
757-988 3
989-1410 4
1411-1584 7
1585-1848 8
1849-2000 9
2001-2306 10

CFR PARTS AFFECTED DURING JANUARY

At the end of each month, the Office of the Federal Register publishes separately a list of CFR Sections Affected (LSA), which lists parts and sections affected by documents published since the revision date of each title.

1 CFR
445 2001

3 CFR
Administrative Orders:
Presidential Determinations:
No. 80-9 of December 20, 1979 1585
Executive Orders:
11269 (Amended by EO 12188) 989
11539 (Amended by EO 12188) 989
11651 (Amended by EO 12188) 989
11703 (Amended by EO 12188) 989
11846 (Amended by EO 12188) 989
11858 (Amended by EO 12188) 989
12096 (Revoked by EO 12188) 989
12187 3
12188 989
Memorandums:
December 14, 1979 (Amended by EO 12188) 989
December 27, 1979 1
January 2, 1980 759
Proclamations:
4710 757
4711 1587

4 CFR
Proposed Rules:
404 48
421 1038

5 CFR
Ch. XIV 761
175 995
213 5
334 995
540 1591
630 1591
733 1592
771 5
831 996
Proposed Rules:
335 1040
351 1040
432 1040
752 1040
771 1040
831 1041

6 CFR
705 ..... 966, 1816
706 966
707 966

7 CFR
2 1411
27 761
210 ..... 996, 999
225 1844
235 999
245 999
724 1001
907 ..... 762, 2001
910 1001
971 10
984 1593
1843 1593
1864 1002
1942 1002
1944 1411
1951 1002
1955 1002
Proposed Rules:
210 1041
235 1041
301 1615
331 1615
907 1621
979 1887
985 1888
1064 1908
1421 1042
2852 1046
2853 1049

9 CFR
75 1002
92 1003
Proposed Rules:
50 1622

10 CFR
211 12
212 1582
Proposed Rules:
70 1625
73 1625
211 799
212 799
430 1298

12 CFR
4 ..... 12, 13
18 15
23 13
304 1594
349 1594
525 1849
526 1853
545 ..... 1849, 1853
563 ..... 1849, 1853
590 1953
600 1594
615 1594

720....17
Proposed Rules:
545....1425
563....1916

13 CFR
101....2001
130....1411

14 CFR
39....762, 763, 1412, 1414, 2002–2010
71....300, 764, 765, 2011–2013
73....300, 765, 2013
75....300, 765
91....1414
97....765, 2016
183....1415
380....1855
385....1857, 2018
399....2018
1209....1006
Proposed Rules:
Ch. I....799
71....2048–2051
73....2051
107....1427
108....1427
121....1427
129....1427
135....1427
223....1918
225....1918

15 CFR
Ch. III....1595
302....767
371....1595
373....1595
376....1595, 1883
377....1007
385....1595
386....1883
399....1595, 1883
2301....1988
Proposed Rules:
806....1049

16 CFR
13....1011, 1857
438....1011

17 CFR
1....2019
145....2019
147....2019
211....20, 1416
230....1601
270....1860
Proposed Rules:
200....1627

18 CFR
157....1861
201....767
204....767
271....1862
282....21, 767, 1872
284....1872
290....2023
Proposed Rules:
141....48
260....48
280....2052
282....1081
284....2052

19 CFR
143....1012
153....1013, 1417
159....25, 1013
Proposed Rules:
6....1633
10....1633

20 CFR
404....1605, 1611
614....1014
615....797, 1015
676....1016
725....27, 1017

21 CFR
108....1612
146....1612
178....1018
182....1019
193....1418
522....1019
540....1613
558....1020
Proposed Rules:
172....1085
452....1085

22 CFR
525....28
Proposed Rules:
Ch. II....1641
Ch. V....1641
143....1638

23 CFR
420....1418
620....1418
Proposed Rules:
450....2296
476....2296
625....982
655....982
663....952

24 CFR
Proposed Rules:
570....802
885....802
888....802

25 CFR
261....2026

27 CFR
Proposed Rules:
5....50

29 CFR
24....1836
1601....1876
1613....29, 780
2610....2026
Proposed Rules:
9....1642
32....1392

31 CFR
240....1020
535....1877

32 CFR
Proposed Rules:
651....1086

32A CFR
Ch. VI....30

33 CFR
127....1418
164....2027
165....1418
183....2028
Proposed Rules
Ch. I....2052
207....1919

36 CFR
222....30
1226....780
Proposed Rules:
222....1108

38 CFR
3....1877
21....30
Proposed Rules:
21....803

39 CFR
233....1613
Proposed Rules:
310....1427
320....1427

40 CFR
52....780–782, 1022, 1024, 1419, 2031–2036
81....2036, 2044
87....1419
201....1252
Proposed Rules:
Ch. I....52
Ch. V....1429
52....52, 1108, 1429, 1643, 2054
81....1647
180....2058
201....1109
250....2059
401....803
410....53, 806
425....53
429....53
446....912
447....928
454....53

41 CFR
9–7....942
109–1....943
109–60....943
Proposed Rules:
24–1....1109

42 CFR
66....1822
Proposed Rules:
2....53

43 CFR
29....1026
31....783
401....1878
403....1878
406....1879
Proposed Rules:
17....976

44 CFR
5....1421

45 CFR
601....1422
640....39
Proposed Rules:
Ch. XII....1430
540....806

46 CFR
4....2045
5....2045
502....1879
Proposed Rules:
Ch. I....2052

47 CFR
73....1880, 1881,
73....1919–1923, 1976
83....1924
Proposed Rules:
2....2060
56....1431
63....2066
73....2067
90....2067
94....2060, 2069
97....2071
401....1431

49 CFR
1....783
580....784
1033....42, 43, 784, 785, 1881, 1882
1127....43
Proposed Rules:
Ch. X....1434
571....807
575....807
1001....1434
1011....1434
1100....1434
1127....55
1131....1434
1131a....1434
1201....809
1241....809
1301....56

50 CFR
33....1026, 1027, 2046
611....785, 1028
652....786
671....785, 1613
Proposed Rules:
13....809
22....809
23....1110
611....56
651....1112

AGENCY PUBLICATION ON ASSIGNED DAYS OF THE WEEK

The following agencies have agreed to publish all documents on two assigned days of the week (Monday/Thursday or Tuesday/Friday). This is a voluntary program. (See OFR NOTICE FR 32914, August 6, 1976.)

Monday	Tuesday	Wednesday	Thursday	Friday
DOT/SECRETARY	USDA/ASCS		DOT/SECRETARY	USDA/ASCS
DOT/COAST GUARD	USDA/APHIS		DOT/COAST GUARD	USDA/APHIS
DOT/FAA	USDA/FNS		DOT/FAA	USDA/FNS
DOT/FHWA	USDA/FSQS		DOT/FHWA	USDA/FSQS
DOT/FRA	USDA/REA		DOT/FRA	USDA/REA
DOT/NHTSA	MSPB/OPM		DOT/NHTSA	MSPB/OPM
DOT/RSPA	LABOR		DOT/RSPA	LABOR
DOT/SLSDC	HEW/FDA		DOT/SLSDC	HEW/FDA
DOT/UMTA			DOT/UMTA	
CSA			CSA	

Documents normally scheduled for publication on a day that will be a Federal holiday will be published the next work day following the holiday.

Comments on this program are still invited. Comments should be submitted to the Day-of-the-Week Program Coordinator. Office of the Federal Register, National Archives and Records Service, General Services Administration, Washington, D.C. 20408

REMINDERS

The items in this list were editorially compiled as an aid to **Federal Register** users. Inclusion or exclusion from this list has no legal significance. Since this list is intended as a reminder, it does not include effective dates that occur within 14 days of publication.

Rules Going Into Effect Today

AGRICULTURE DEPARTMENT

Animal and Plant Health Inspection Service—

71407 12–11–79 / Certain desiccated poultry vaccines; revised packaging requirments

71406 12–11–79 / Label Requirements for certain canine vaccines

FEDERAL EMERGENCY MANAGEMENT AGENCY

71794 12–11–79 / Disaster Assistance; General Insurance Requirements

71790 12–11–79 / Disaster Assistance: Community Disaster Loans

71793 12–11–79 / Disaster Assistance: Fire Suppression Assistance

List of Public Laws

Note: No public bills which have become law were received by the Office of the Federal Register for inclusion in today's **List of Public Laws.**

Last Listing January 8, 1980

Advance Orders are now Being Accepted for Delivery in About 6 Weeks

CODE OF FEDERAL REGULATIONS

(Revised as of October 1, 1979)

Quantity	Volume	Price	Amount
_____	Title 42—Public Health (Parts 1 to 399)	$8.50	$_____
_____	Title 45—Public Welfare (Parts 500 to 1199)	7.00	_____
_____	Title 45—Public Welfare (Parts 1200 to End)	6.50	_____
_____	Title 47—Telecommunication (Parts 0 to 19)	6.50	_____
		Total Order	$_____

[A Cumulative checklist of CFR issuances for 1979 appears in the back of the first issue of the Federal Register each month in the Reader Aids section. In addition, a checklist of current CFR volumes, comprising a complete CFR set, appears each month in the LSA (List of CFR Sections Affected).]

PLEASE DO NOT DETACH

MAIL ORDER FORM To:

Superintendent of Documents, Government Printing Office, Washington, D.C. 20402

Enclosed find $..... (check or money order) or charge to my Deposit Account No. .....

Please send me ..... copies of:

FOR USE OF SUPT. DOCS.

____Enclosed____
To be mailed
____later____
____Subscription____
Refund____
Postage____
Foreign Handling____

PLEASE FILL IN MAILING LABEL BELOW

Name _____

Street address _____

City and State _____ ZIP Code _____

FOR PROMPT SHIPMENT, PLEASE PRINT OR TYPE ADDRESS ON LABEL BELOW, INCLUDING YOUR ZIP CODE

SUPERINTENDENT OF DOCUMENTS
U.S. GOVERNMENT PRINTING OFFICE
WASHINGTON, D.C. 20402

OFFICIAL BUSINESS

POSTAGE AND FEES PAID
U.S. GOVERNMENT PRINTING OFFICE
375
SPECIAL FOURTH-CLASS RATE
BOOK

Name _____

Street address _____

City and State _____ ZIP Code _____