13475

INLAND CANALS:

COASTAL ZONE
INFORMATION CENTER

An Alternative for Industry

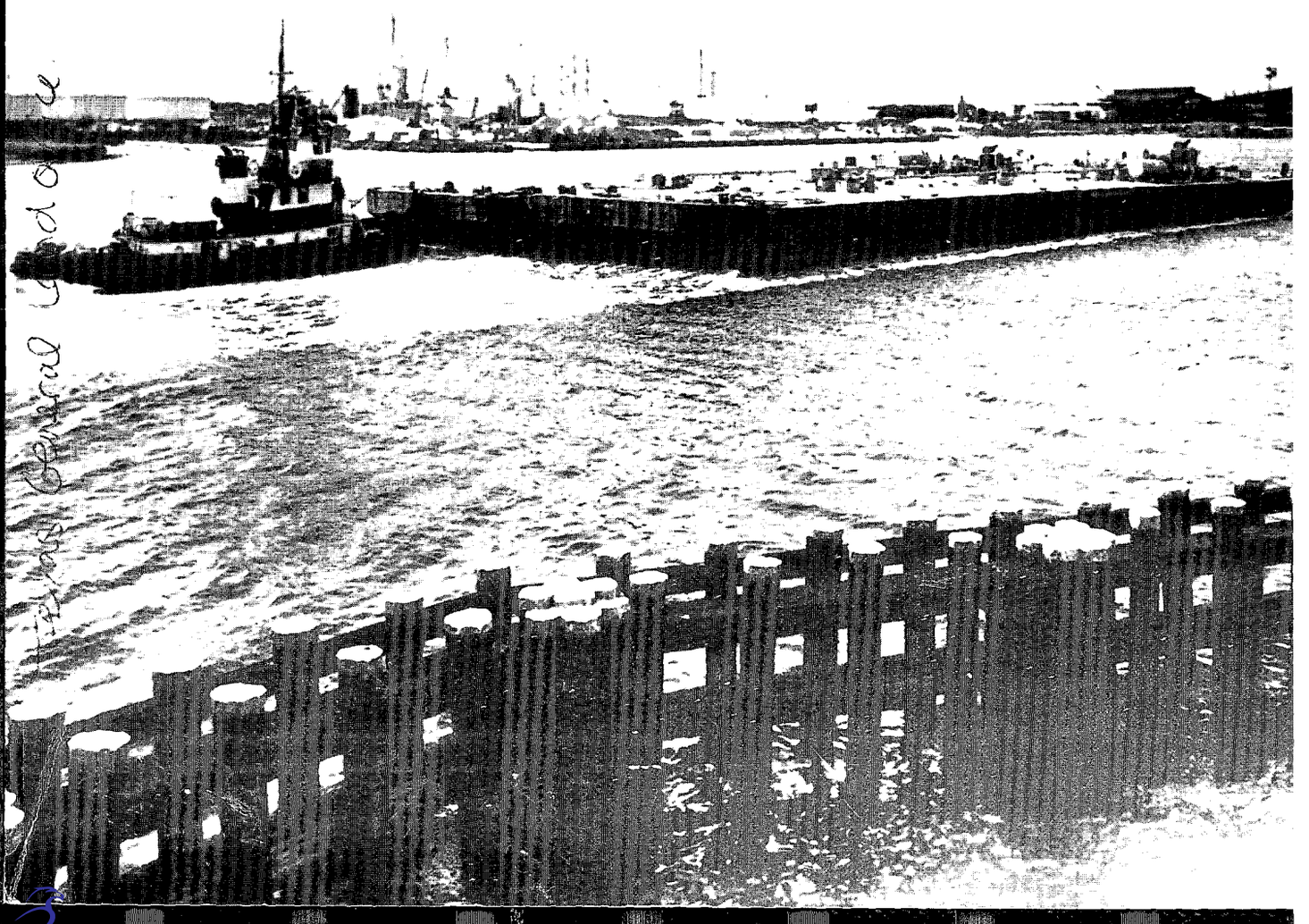

U.S.
INF
USPO

13475

COASTAL ZONE
INFORMATION CENTER

A STUDY TO ASSESS THE FEASIBILITY OF INLAND CANALS AS AN ALTERNATIVE TO BAY AND RIVER MARGIN PORT AND INDUSTRIAL DEVELOPMENT

Texas Coastal Management Program
General Land Office of Texas
Bob Armstrong, Commissioner

U.S. DEPARTMENT OF COMMERCE NOAA
COASTAL SERVICES CENTER
2234 SOUTH HOBSON AVENUE
CHARLESTON, SC 29405-2413

Prepared by
Research and Planning Consultants
Austin, Texas
July, 1977

Second Printing

Property of CSC Library

Andrew E. Reed
Project Manager

Ronald Tule
Quality Control Reviewer

Ron Jones
Management Reviewer

This report was funded through financial assistance provided by the Coastal Zone Management Act of 1972, administered by the Office of Coastal Zone Management, U.S. Department of Commerce.

RPC INC. RESEARCH & PLANNING CONSULTANTS

Texas. General Land Office
TC624.T4 R471977 c.2
APR 2 8 1997

FOREWORD

In February of 1977, the General Land Office contracted with Research and Planning Consultants to assess the feasibility of inland canals as a special study of the Texas Coastal Management Program.

RPC, Inc., has evaluated the concept through a hypothetical case study in Brazosport, Texas. The results of the case study indicate that the inland canals are a feasible alternative to traditional navigation developments, both in terms of cost to industry and in minimizing adverse environmental, social, and economic impacts.

I believe that the study findings present important policy implications for accommodating industrial growth and economic viability while protecting our productive coastal resources. My staff will be reviewing the study in the forthcoming months and investigating a position on energy facility siting which incorporates the advantages of the inland canal alternative.

Bob Armstrong, Commissioner
GENERAL LAND OFFICE

CONTENTS

	Page
I. Executive Summary	1
A. Introduction	1
1. Purpose and Objectives	1
B. Summary of Findings	1
1. Cost Feasibility	1
2. Design Feasibility	2
3. Governmental Assistance	2
4. Assessment Procedure	2
C. Study Approach	3
D. Study Limitations	3
II. Study Area Selection	5
A. Study Area Selection	5
1. Study Area Selection Criteria	5
2. Criteria Application	5
3. Summary Description of the Study Area	11
4. Study Area Selection References	12
B. Description of the Study Area Environment	14
1. Climatic Characteristics and Air Quality	14
2. Geology and Substrate Characteristics	19
3. Drainage Systems	27
4. Ecosystems and Wildlife	28
5. Land Use	32
6. Social and Infrastructural Characteristics	36
7. Description of the Study Area Environment References	40
III. Project Feasibility Analysis	43
A. Industry Location Analysis	43
1. Industry Location Factors	43
2. Selection of Industries	47
3. Specific Requirements of Refinery-Petrochemical Complex	58
4. Industry Location Analysis References	68
B. Environmental Engineering	70
1. Environmental Constraints	70
2. Engineering Alternatives	74
3. Design Criteria Summary	94
C. Least Environmental Impact Corridor Section	95
1. Corridor Dimensions	95
2. Selection of Alternate Corridors	95
3. Corridor Descriptions	109
4. Corridor Selection	114
5. Least Environmental Impact Corridor Selection References	115
D. Project Layout, Design, and Construction	116
1. Project Layout and Design	116
2. Construction Procedures	126
3. Project Costs	130
4. Project Layout, Design, and Construction References	130
E. Legal/Institutional Analysis	133
1. Public and Private Alternatives for Ownership, Financing, Construction, and Operation of an Inland Canal	133
2. Regulatory Authority Affecting the Construction and Maintenance of an Inland Canal	137

3. Regulatory Authority Affecting Industrial Development Along the Canal 140
4. Governmental Programs for Alleviating Adverse Impacts of the Project 142
5. Interpretation 142
F. Economic Feasibility Analysis 143
1. Market Comparison 143
2. Cash Flow and Rate of Return Analysis 144
3. Summary 156
4. Economic Feasibility Analysis References 156

IV. Environmental Impact Analysis 157

A. Impacts of Inland Canal Construction and Industrial Site Preparation 157
1. Economic Impact Analysis 157
2. Environmental Impact Analysis 174
3. Social and Infrastructural Impact Analysis 195
B. Impacts of Industrial Site Development and Operation 204
1. Economic Impact Issues 205
2. Environmental Impact Issues 208
3. Social and Infrastructural Impact Issues 211

V. Alternatives to the Inland Canal Concept 213

A. Impacts Typically Associated with Navigation Projects 213
B. Impacts Differing Between Traditional and Inland Canal Concepts 214
C. Evaluation of Differing Impacts 215
D. Alternatives to the Inland Canal Concept References 216

VI. Implications for Further Research 217

A. Additional Data Needs 217
B. Deep Draft Channel 217
C. Waterfront Terminal Facility 217

VII. Appendices
A. Theory of Industry Location Analysis 219
B. Petroleum Refineries and Petrochemical Plants Located on the Texas Gulf Coast 222
C. Environmental Data Base and Data Evaluation 227
D. The Brazoria County Input/Output Model 233
E. Ecological Alterations Analysis 243
F. Bibliography 256

LIST OF FIGURES

Figure No.	Title	Page
1.	Feasibility Assessment Methodology	4
2.	Study Area Selection Criteria	6
3.	Preliminary Locations for Siting an Inland Canal	6
4.	Study Area Location	8
5.	Distribution of Manufacturing Plants in the Texas Coastal Zone, 1975	9
6.	Area of Projected Population	13
7.	Brazoria County Temperature Patterns	15
8.	Brazoria County Precipitation Patterns	16
9.	Wind Current Frequency Rose at Galveston	17
10.	Combined Emission Source Inventory	18
11.	Generalized Geologic Map of the Gulf Coastal Plain and the Principal Hydrographic Features of the Gulf of Mexico	20
12.	Generalized Gulf Coastal Aquifer Profile Showing Chicot and Evangeline Aquifers	21
13.	Deltaic Depositional Environments in the Brazos Coastal Basin	24
14.	Physical Properties Groups Natural Suitability Analysis	25
15.	Land Use by Census Tract	33
16.	Census Tract Map	34
17.	1975 Traffic Map—Annual Average 24 Hour Traffic Volume	35
18.	Brazoria County Population Statistics	36
19.	Population Age Profile—Brazoria County, Texas	37
20.	Brazoria County Employment by Occupation	38
21.	Parks in Brazoria County	39
22.	The Site Selection Process	44
23.	Competitive Advantage Ranks of Transportation Modes	45
24.	Tax Comparisons as the Basis for the Location Decision	48
25.	Importance Attached to Having a Plant Site with Water Transportation Facilities	49
26.	Locational Objectives To Be Achieved as a Percentage of Survey Respondents	50
27.	Percentage of Products Shipped by Water, 1972	50
28.	Major Users of the Gulf Intracoastal Waterway in Texas	51
29.	Basic Chemical Capacity, 1975	53
30.	Energy Used by U.S. Petrochemical and Petroleum Refining Industries for Heat and Power, 1974	53
31.	Water Consumption by Industry in Texas, 1973	55
32.	Water Intake by Purpose and Kind, U.S. and Texas, 1973	56
33.	Expected Employment at Fully Operational Plants	57
34.	Representative Petrochemical Complex	59
35.	Requirements of Postulated Refinery and Petrochemical Complex	60
36.	Classification of Employment in a Gulf Coast Refinery	61
37.	Estimated Acreage Requirements by Refineries	62
38.	Net Energy Consumption of Average U.S. Refineries	63
39.	Water Intake, Value Added, and Employment in the Refining Industry in Texas and the U.S., 1973	64
40.	Sales Value of Representative Complex	65
41.	Electric Power Use by the Texas Petrochemical Industry, 1974	67
42.	Water Intake, Value Added and Employment in the Chemical Industry in Texas and the U.S., 1973	67
43.	Environmental Constraints	71
44.	Engineering Alternatives	75
45.	Design Criteria Summary	96
46.	Evaluation Map Elemental Constraints	100

47. Environmental Evaluation Procedure 110
48. Corridor Evaluation Matrix 111
49. Alternative Inland Canal/Industrial Site Corridors 112
50. Conceptual Site Plan 117
51. Canal Cross Section 118
52. Redfish Bayou Diversion 119
53. Harbor Dimensions and Berth Zone 121
54. Acreage Allocation by Use 121
55. Site Drainage 123
56. Inland Canal Project Schedule 128
57. Inland Canal/Industrial Site Project Summary 130
58. Cashflow Stage 1 Private Financing 146
59. Present Value Analysis—Stage 1, Stage 2, and Stages 1 and 2 Combined 148
60. Cashflow Stage 2 Private Financing 150
61. Cashflow Stage 1 Public Financing 153
62. Cashflow Stage 2 Public Financing 154
63. Major Activities, Canal Construction and Industrial Site Preparation 158
64. Distribution of Activities Over Time, Phase 1 159
65. Distribution of Activities Over Time, Phase 2 159
66. Primary Expenditures 161
67. Direct and Indirect Employment Requirements 163
68. Resident, New Resident and Commuter Employment Requirements 164
69. New Population and New Students 165
70. Primary and Indirect Personal Income 167
71. State Tax Payment Coefficients—Construction Sector 168
72. State Tax Payments 168
73. Local Tax Payment Coefficients Construction Sector, Brazoria County 170
74. Local Tax Payments—Brazoria County 170
75. Government Expenditures—Brazoria County 171
76. Fiscal Impact Brazoria County 172
77. Summary of Economic Impacts, Canal Construction and Industrial Site Preparation 173
78. Inland Canal Project Activities and Resource Areas 176
79. Potential Primary Ecological Alterations 177
80. Primary Ecological Alterations Matrix 179
81. Nutrient-Sediment Relationship 182
82. Infrastructural Issues, Indicators, and Standard Measures 196
83. Population and Employment as the Result of Canal Construction 197
84. Brazoria County—Rate of Growth 198
85. Projected Population for Brazoria County 1970-2020 198
86. School Enrollment in Brazosport Area 199
87. Hospitals and Physicians 200
88. Distribution of Refinery Construction Costs 205
89. Summary of Annual Economic Impacts, Refinery and Petrochemical Complex Construction and Operation 207
90. Typical Environmental Loadings Associated with a 250,000 B/D Refinery/Petrochemical Complex 209

Appendices

A1 Summary of Location Factors 220
B1 $ Million Output and Employment 222
B2 Petroleum Refineries Located on the Texas Gulf Coast 223
B3 Petrochemical Plants Located on the Texas Gulf Coast 224
C1 Soil Interpretations for Selected Uses, Limitations and Suitabilities 229
D1 Transactions Table 234
D2 Direct Requirements Table 234
D3 Direct and Indirect Requirements Table 235
E1 Fluvial Woodland Ecological Systems Diagram 244
E2 Prairie Grassland Ecological Systems Diagram 246
E3 Brackish-Water Marsh Ecological Systems Diagram 248
E4 Record of Ecological Alterations Analysis 250

Map No. **Title**

1. Natural Hazards 101
2. Substrate, Soils, Aquifers 102
3. Ecosystems 103
4. Wildlife 104
5. Land Use 105
6. Transportation, Minerals, Archeology 106
7. Composite Constraints 107

ACKNOWLEDGEMENTS

Research and Planning Consultants is responsible for the preparation and content of this report. The project was managed by Andrew Reed. The principal authors of the report are Alan Dutton, environmental inventory, impact analysis, and planning; Ann Orzech and Stuart Greenfield, industry location analysis and economic impact analysis; Arthur Eatman, environmental engineering and design; Leah Pagan, social impact analysis; Polly McGlew and John McLaren, legal/institutional analysis; and Denise Girard, research assistant. Additional research participants are David Brown, Dennis Cooper, Bill Longley, Frank Sturzl, and Lloyd Urban. Graphics and typesetting were prepared by Oscar Rizk-Aziz, Pat Wiles, Eleanor Dailey, David Fox, and LaWanna Kaatz.

Numerous agencies, organizations, and individuals contributed their time and resources to this study. Notable data sources are: Seadock, Inc.; the U.S. Soil Conservation Service; Brazosport Chamber of Commerce; Brazos Harbor Navigation District; Dow Chemical U.S.A.; Union Carbide Corporation; U.S. Army Corps of Engineers, Galveston District; Friendswood Development Corporation; General Crude Oil Company; and Texas Industrial Commission. Field surveys were assisted by Ed Stokely and H. M. Garner.

Review of the draft manuscript was conducted by the Texas General Land Office and by interested individuals and organizations. We appreciate their thoughtful comments and suggestions.

Ron Jones, President
Ronald Luke, Principal-in-Charge
Austin, Texas
July, 1977

INTRODUCTION

Coastal industries are highly dependent upon water transportation. Water is an efficient means for moving raw materials to industry and for shipping finished products to markets. The development of navigation channels and associated industry in coastal waters and shorelands has destroyed vast areas of productive wetlands. This study analyzes inland canals as a method of providing navigation access without large-scale alteration of wetlands. Subject to the limitations expressed below, the study substantiates the hypothesis that widespread wetland alteration is not a necessary part of coastal industry siting and navigation development.

Purpose and Objectives

The growing demand for navigation access, dredged material disposal sites, and industrial development has increased concomitant with public policy restrictions against large-scale alteration of productive wetlands. As the State agency with primary responsibility for managing the coastal public lands and implementing the policies designed for their protection, the General Land Office is investigating alternatives to traditional industrial navigation development which can reduce channelization and filling of valuable wetland systems. This study was initiated by the General Land Office through the Texas Coastal Management Program. The purpose of the study is to investigate the feasibility of the inland canal alternative and formulate a methodology which can be applied to an analysis of energy facility siting on the Texas coast.

The objectives of the study are threefold. First, the hypothesis that the inland canal is a feasible alternative to traditional navigation developments must be tested. Second, a usable methodology to locate and design an inland industrial canal with least environmental impact must be developed. Third, the information of most value in applying this methodology and in determining the impacts of an inland canal project must be compiled.

Given these objectives, two audiences are expected to find the study results to be interesting and useful. Industry will find it opportune to incorporate the study results into future development decisions. Governmental entities responsible for managing coastal resources will find the study conclusions of use in reviewing plans for coastal industrial navigation developmens.

SUMMARY OF FINDINGS

The inland industrial canal concept can be a feasible alternative for industrial siting on the Texas coast. This determination is based on the analysis of a hypothetical case study of an inland industrial canal located in the Brazosport area of Brazoria County, Texas.

Cost Feasibility

1. The financing of land purchase, canal construction, and site preparation would be a profitable venture for the private investor. Site improvements, including the installation of utilities, are necessary to the marketability of the project, but result in a less profitable private investment.

2. Public financing of the project would likewise be feasible, and would be desirable for the utility system. Public ownership of the project through a navigation district would confer unique financing advantages. Federal funding of canal construction, while reducing local public or private investment costs, would cause an inexpedient project delay.

3. Feasibility of the concept is contingent upon acquisition of a large parcel of land providing 7,000 to 10,000 net salable acres. This finding is based on the magnitude of project costs, the existing real estate market, and experience of similar developments.

Design Feasibility

1. The inland industrial canal approach can successfully reduce wetland alteration and dredged material disposal problems often associated with traditional industrial navigation projects.

2. A conceptual design which incorporates excavated and dredged material into industrial site fill and flood protection levee construction is a practical solution to disposal of dredged material and to hurricane and river flood hazards. It would not be economical to transport material dredged at the lower reaches of the canal to the industrial site. This material would have to be placed within the canal right-of-way.

3. Routing of the canal on a drainage divide or low coastal ridge would minimize the detrimental modification of surface runoff flows to wetlands and reduce sedimentation in the canal. Long-term maintenance dredging requirements for an inland canal may be lower than for bay or river channels.

4. Potential environmental impacts which should be closely studied in inland canal design include:
   a. upland habitat loss and habitat isolation;
   b. the modification of upland sheetflow runoff to point source flow;
   c. modification of the flow rate and volume of intermittent streams if their diversion under the canal is required;
   d. saltwater intrusion into the water table adjacent to the canal;
   e. the potential for the flow of hazardous spills to escape the canal and enter adjacent wetlands; and
   f. concentrated air pollutant levels resulting from aggregation of industries.

5. Potential social and economic impacts detected in the hypothetical case study include:
   a. the possible creation of a short-term municipal fiscal deficit in the project area due to new residents and infrastructural requirements; and
   b. stress on existing transportation and water supply systems;

   Public interaction throughout the planning process is essential to protection of community character and social structure.

Governmental Assistance

Numerous governmental assistance programs available to alleviate the adverse impacts caused by project development have been identified. Programs relevant to the case study include the Coastal Energy Impact Fund, construction grants for wastewater treatment works administered by the Environmental Protection Agency and the Texas Water Quality Board, funds provided under the Clean Air Financing Act, EPA water quality enhancement bonds, and funds provided by the Economic Development Administration. Participation in these and other programs will depend on the allocation of funds and ability to qualify.

Assessment Procedure

The environmental assessment procedure, which combines aspects of least impact corridor identification and the Activity Assessment Routine of the Texas Coastal Management Program is a useful environmental planning tool. The ecological systems diagram analysis is effective in screening the potential ecological alterations of a project, but a quantified data system based on field sampling would be essential to the application of environmental analysis beyond the conceptual stage. The number of judgments required to assess the ecological impacts is lessened with a systematic approach, even in a qualitative systems analysis; the need for discretion, however, is not eliminated.

STUDY APPROACH

The feasibility of the inland industrial canal concept was assessed according to three factors:

1. the cost of developing an inland canal and associated industrial site with features comparable to traditional industrial navigation developments;
2. the economic, environmental, and social impacts of an inland canal development; and
3. the relative ability of an inland canal approach to minimize adverse impacts associated with traditional industrial navigation developments.

The assessment methodology employed is shown in Figure 1. The four primary tasks include selection of a case study area, project feasibility analysis, environmental impact analysis, and comparison to alternatives.

In the site selection process (Chapter II) 18 preliminary inland canal sites on the Texas coast are analyzed according to criteria which include physical/geographic requirements, suitability for potential industries, and requirements of the study methodology.

The project feasibility analysis (Chapter III) employs a process to identify a least environmental impact corridor for the canal based on an evaluation of the environmental and socioeconomic design constraints in the study area. The requirements of two postulated industrial sectors and a detailed compilation of engineering parameters are then applied to layout and design of a conceptual inland canal within the selected corridor.

The environmental impact analysis (Chapter IV) is an application of two existing methodologies. Ecological impacts are determined through the Activity Assessment Routine developed by the Texas Coastal Management Program. Non-ecological environmental impacts and economic and social impacts are assessed by the methodology developed by the OCS impact study of the Texas Coastal Management Program.

The final task in the study is a comparison of the impacts of the inland canal approach to the impacts of traditional navigation developments (Chapter V). This process identifies the impacts that differ between the two approaches, thereby establishing a basis for a comparison of the relative advantages and disadvantages of the inland canal concept.

Additional information concerning industry location analysis, data evaluation, and impact analysis is included as appendices along with a bibliography.

STUDY LIMITATIONS

A case study of a hypothetical design is inherently limited by the assumptions which must be made in postulating the design. Field investigations to obtain primary data for refining the statement of industrial requirements, environmental engineering design, and of project costs were beyond the scope of this study. The feasibility conclusions, therefore, are contingent both on the appropriateness of the many study assumptions and also on the generalizability of the project design.

The scope of the study is limited to the activities of design and construction of the inland canal and the industrial site preparation. Although significant operational issues are discussed, a detailed analysis of industrial facility construction and operation has not been attempted because this development phase is comparable to what would be incurred under typical projects, and would therefore not greatly contribute to the feasibility analysis.

Figure 1

Feasibility Assessment Methodology

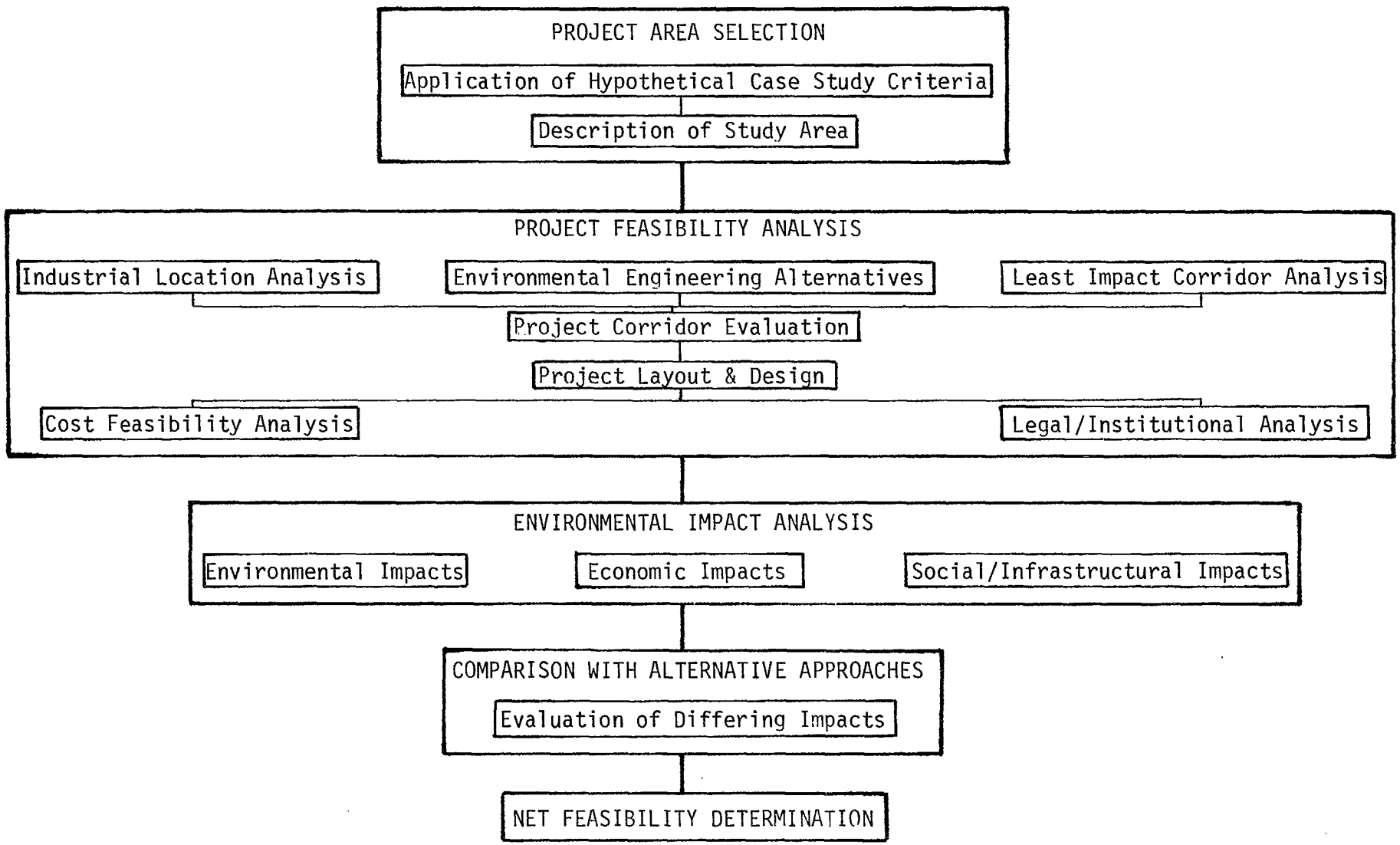

This section describes the process leading to selection of a study area in Brazosport, Texas. The procedure includes a survey of general siting criteria which were applied to 18 inland canal sites preliminarily identified by McFarland et al. (1976).

The study area selection is based on two primary objectives:

1. identification of an area suitable for an inland canal, and
2. identification of an area suitable for an inland canal route selection and impact assessment methodology.

The first objective provides that site selection criteria consider the inherent suitability of an area for an inland canal based on potential industrial requirements, geographic factors, and ability to meet physical construction requirements. The assumption that demand for the canal and industrial sites will, in fact, exist is basic to this study (see Industrial Location Analysis, Chapter III-A).

The second objective provides that the study area selection process consider such factors as data quality, quantity, and availability; a variety of geographic, socioeconomic, and ecological conditions providing a comparison of alternatives; accessibility to the site by the study team; and proximity to traditional port developments to facilitate comparisons.

Study Area Selection Criteria

The study area selection criteria are based on the preceding objectives, a set of inland canal site criteria (McFarland et al., 1976), other lineal feature routing studies (Allen et al., 1974; Minnesota Power and Light, 1976), and on channel, port, and industry siting studies (Takel, 1974; Lochmoeller, et al., 1975; Panel on Future Port Requirements, 1976).

The study area selection criteria are shown in Figure 2. Three categories of factors have been identified. The first category includes the characteristics of the site which should be considered to assure that it is physically suited to canal construction. The second category considers the requirements of industries which locate at the canal, and the last category represents the requirements of the study methodology.

The criteria applied at this stage are general in scope and designed for a coastwide reconnaissance of areas which are suited for an inland canal. More specific criteria will be presented subsequently in determining a channel route and industrial site within the designated study area, the postulated industries, and industrial requirements.

The selected site is certainly not the only suitable location on the Texas coast for such a project. Other potential locations have been identified as discussed below. The suitability of other sites, however, can be better evaluated based on the results of the feasibility analysis itself.

Criteria Application

McFarland et al. (1976) preliminarily identified 18 geographic areas suitable for locating an inland canal (Figure 3). These sites were selected on the basis of 1) access to existing waterways and proximity to other transportation modes, 2)the industrial demand and availability of development sites, 3) the presence of other industry location requirements, and 4) geological and environmental factors.

A detailed analysis of these sites indicated three case study area candidates: the upper Corpus Christi Bay area, the Lavaca Bay area, and Brazosport. For the reasons cited below, the Brazosport area provides an optimum combination of factors meeting the study area selection criteria.

Figure 2

Study Area Selection Criteria

Physical Requirements

access from GIWW available at reasonable distance
distribution of large, contiguous, undeveloped tracts of land
proximity to upland areas free from flooding and subsidence
distribution of potential route corridors which minimize conflict with wetlands or other critical systems

Industry Requirements

location with respect to product markets and raw material
multi-model transportation linkages
utility services available—water, electricity, gas, waste treatment
labor available
local environment conducive to industrial growth
land cost and availability
freedom from environmental conflicts

Study Requirements

current, accurate, and comprehensive data available
site accessible by the study team
site representative of coastal environments and physiography
site proximate to existing port and industrial facility developments for comparison
area consistent with industrial development trends

Figure 3

Preliminary Locations for Siting an Inland Canal (Identified by McFarland, et al., 1976)

1. From the Sabine River Channel to Echo (north of Orange) westward to an area north of Orange.
2. From the Neches River to an area between Beaumont and Orange.
3. From Taylor's Bayou or the GIWW to an area south of Beaumont.
4. From the GIWW near High Island north toward the Winnie-Stowell area.
5. From the Anahuac Channel eastward into Chambers County.
6. From existing channels in Trinity Bay into an area southeast to east of Baytown.
7. Inland from the Chocolate Bayou Channel, or from the GIWW in the vicinity of Chocolate Bayou.
8. From existing barge canals or GIWW in the vicinity of Oyster Creek north of Freeport.
9. From the Brazos River southwest toward Clemens State Prison Farm, or from the GIWW between the Brazos and San Bernard Rivers, or from the San Bernard River, inland toward Clemens State Prison Farm.
10. From the GIWW north of the Colorado River or from the Colorado River, inland toward Bay City.
11. From the GIWW between the Colorado River and Tres Palacios Bay, or from the Colorado River, inland toward Buckeye in the general vicinity of Bay City.
12. From Palacios Channel north to area near Buckeye or south to area near Blessing.
13. From the channel in upper Lavaca Bay or the channel to Alcoa Aluminum to an area northwest of Point Comfort (or possibly south to an area west of Port Lavaca).
14. From Lavaca Channel inland toward Placedo.
15. From La Quinta Channel to an area north of La Quinta Channel.
16. From the GIWW inland, immediately south of Corpus Christi.
17. From the GIWW inland to area near Kingsville.
18. From the Brownsville Ship Channel to an area north-northwest of the Port of Brownsville.

Physical Requirements

The Brazosport area ranks high in its natural suitability for an inland canal. The Brazosport area is one of the few sections of the Texas coast with a mainland-type shore bordering the Gulf of Mexico (Figure 4). Navigation related development in the area is confined to the Old Brazos River, whereas other potential sites on the Texas coast benefit from inland access through bay or estuarine systems. Presently available waterfront land in the Brazosport area which is suitable for industrial development is limited to the south side of the Brazos Harbor Channel, with approximately four miles of water front. Small parcels of land are available bordering the GIWW, although access is limited.

Large, undeveloped tracts of land exceeding 5,000 acres area located on upland sites in the area. Land at 10 to 20 foot elevation occurs from 8 to 10 miles inland from the GIWW. Wetland areas adjoining the GIWW in the Brazosport area are interspersed with narrow ridges of upland coastal prairie which may prove to be suitable access corridors to the upland sites. Two river systems, the Brazos and San Bernard, are located in proximity to upland areas, providing additional navigation access possibilities.

Industry Requirements

In addition to being physically suited for canal construction, the study area must also be consistent with industry location objectives. One measure of industry location preferences is the present distribution of manufacturing plants and new construction activities.

The pattern of industrial development on the Texas coast can be described in terms of four acreas of concentrated manufacturing: Jefferson County, Harris-Galveston-Brazoria-Fort Bend Counties, Nueces County, and Cameron County. This pattern is dominated by chemical and allied products, petroleum refining, and related products, primary and fabricated metal products, and machinery fabrication sectors. The area including Harris, Galveston, Brazoria, and Fort Bend Counties represents the largest concentration of manufacturing firms on the coast (see Figure 5).

There were forty new waterside plant construction starts or expansions in the Texas coastal area in 1974 (American Waterways Operators, Inc., 1975). Thirty-four (85 percent) of these plants were located in the Freeport, Chocolate Bayou, Texas City, and Houston area. Harris, Galveston, and Brazoria Counties also account for 63 percent of the operating petrochemical plants and 65 percent of the plants under construction as of 1976. One-third of the nine new refineries, refinery expansions, and reactivations scheduled for the Texas coast between 1976 and 1980 are located in the Houston-Brazosport area. In Brazoria County alone, four new plants are scheduled by 1978.

One of the most extensive petroleum related facilities proposed for the area is Seadock, which would include a crude oil unloading facility located approximately 31 miles offshore connected to a receiving and distribution terminal located between the Brazos and San Bernard Rivers. Seadock projections (1974) indicated that the anticipated 40 cents per barrel (bbl.) transport savings realized by the facility will provide a regional advantage to refinery petrochemical plant location. Although the actual Seadock crude oil throughput will be a function of national demand, importation must exceed 2 million bpd (barrels per day) by 1985 to require additional refinery capacity.

These data indicate a strong attraction to the Houston-Galveston-Brazosport area. This can be explained by a combination of factors including transportation linkages, labor force, competitive utilities, and land prices.

Available waterborne raw material inputs and product distribution facilities are significant in the Houston-Galveston-Freeport area. This area is presently served by four deepwater ports—Freeport, Galveston, Texas City, and Houston—and five smaller ports, including Sweeny, Chocolate Bayou, Dickinson Bayou, Clear Creek, and Cedar Bayou. These ports handled a total of 129,980,000 short tons of cargo in 1974, compared to a Texas coastwide total of 243,820,000

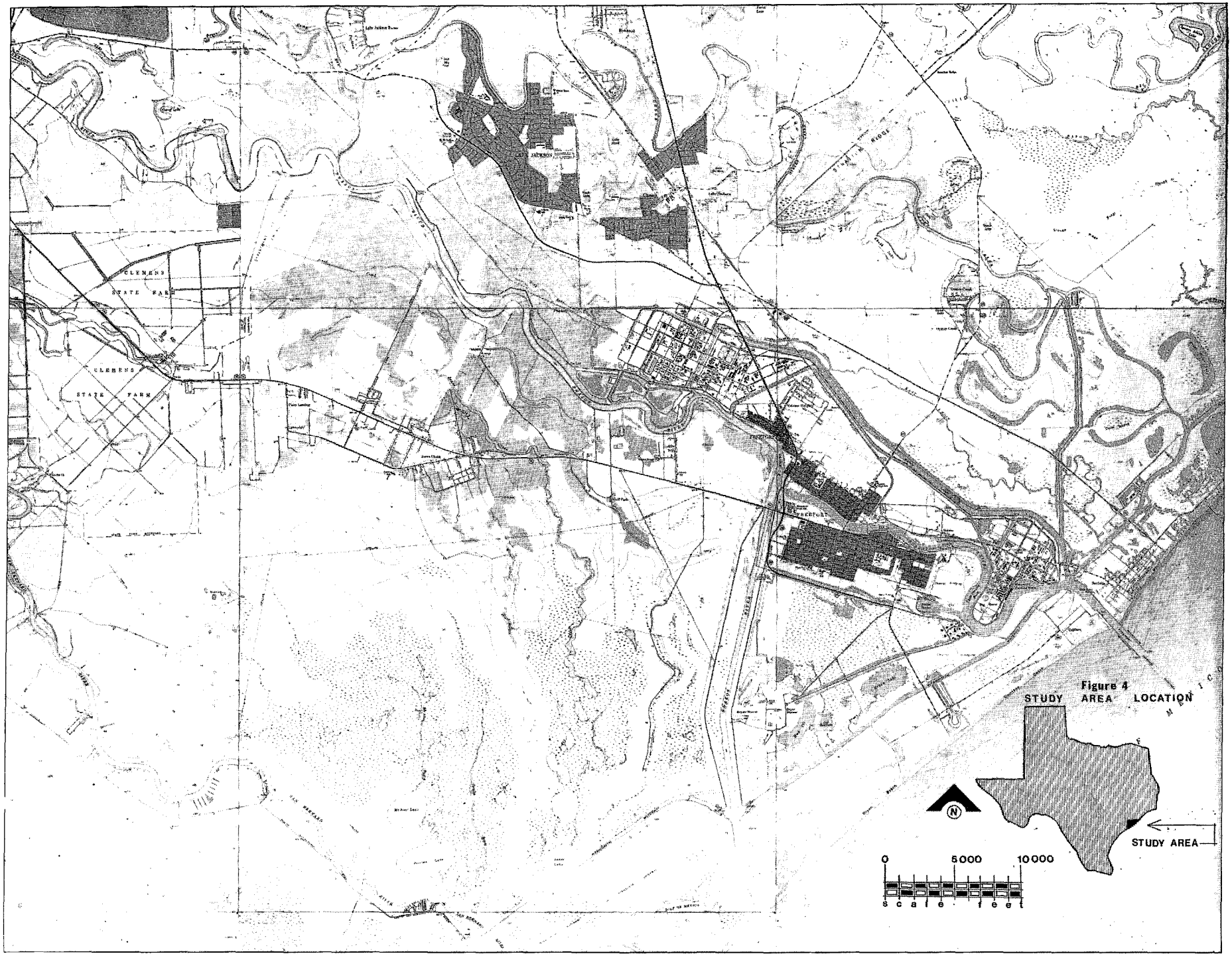
CLEBURNE
STATE FARM
CLEBURNE
STATE FARM
Figure 4
STUDY AREA LOCATION
STUDY AREA
0 5000 10000
scale feet

Figure 5

Distribution of Manufacturing Plants in the Texas Coastal Zone 1975

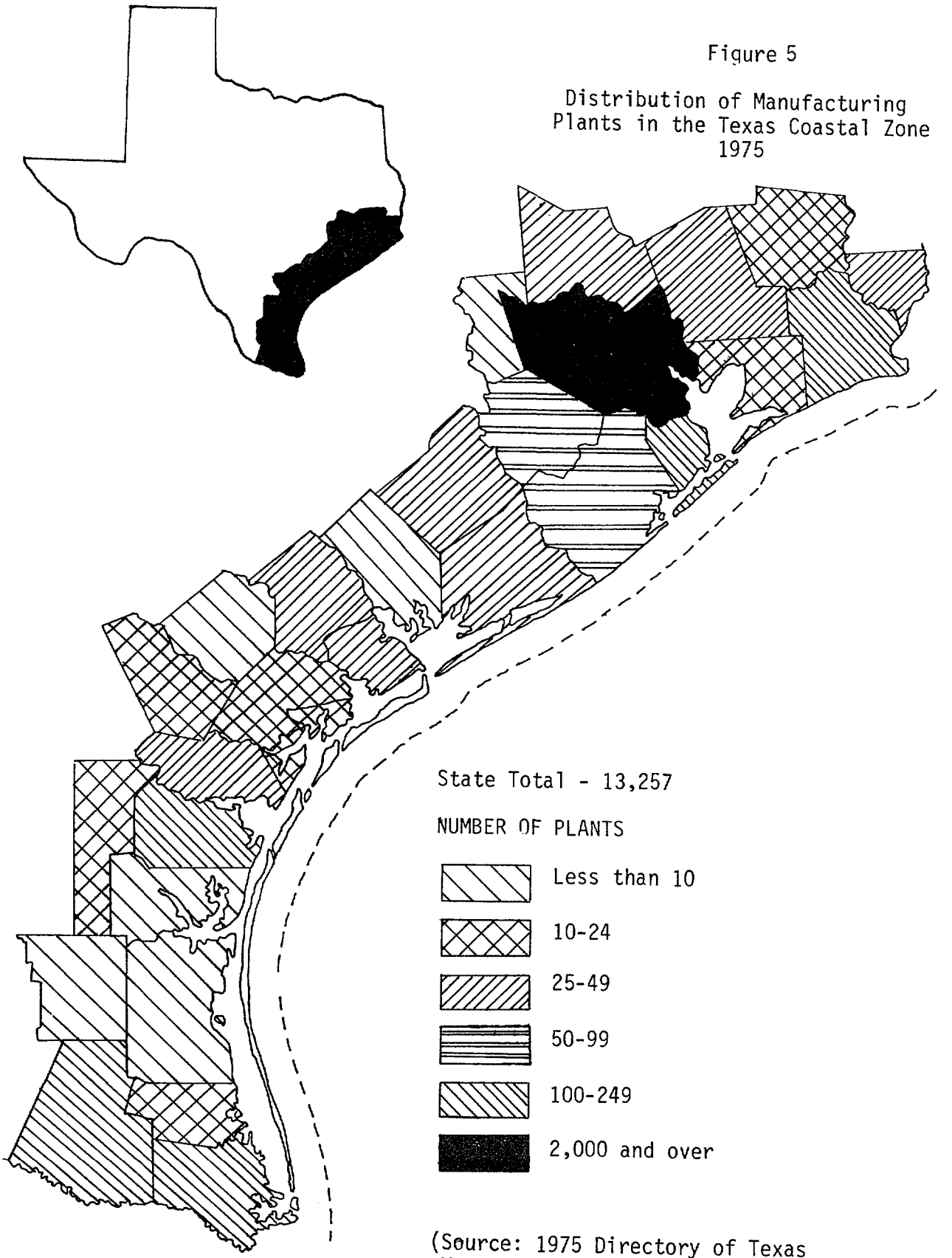

(Source: 1975 Directory of Texas Manufacturers; Adapted from: Atlas of Texas, Bureau of Business Research, 1976)

short tons, or over one-half the total state waterborne cargo. Petrochemical and related products accounted for 70 percent of this total.

Surface transportation is also well developed in the area. Pipeline capacities (crude oil and products) in the Houston-Galveston-Freeport area total over 160 million tons per year. Railroads in the area have a capacity of over 105 million tons, but are operating at less than 20 percent of capacity. Due to the balance of material sources, manufacturing centers, and market distribution patterns, there is a net inflow of goods by rail into the northern coastal area.

Highway transportation linkages are also well established. Major corridors connect Houston, Galveston, Freeport, Victoria, Austin, Waco, Dallas/Fort Worth, Tyler, and Beaumont/Port Arthur. Goods moved by truck on highways leading northwest from Houston total over 10.5 million tons/year, as compared to 21 million tons moved by rail in the same corridor.

Utilities and a suitable labor force are also important industry considerations. The concentration of manufacturing industries in the Houston-Galveston-Brazosport area has stimulated the supply of utility services. The primary electricity supplier to the area is Houston Lighting and Power Company. Scheduled completion of the South Texas Nuclear Plant in 1980 will provide additional industrial use capacity to the Brazosport area with an anticipated 345 kv line. Water for existing Brazosport industries is obtained from an extensive system utilizing the Brazos River and groundwater well field withdrawal. Industrial freshwater, although available, is not abundant in the area, either from ground or surface sources. This situation would improve with completion of a proposed reservoir on the Navasota River.

The labor force in the Brazosport area is characterized as manufacturing and construction oriented, with a high skill level. The single largest employer in the area is Dow Chemical Company, which provides the economic stimulus for numerous smaller manufacturing firms. Unemployment rates in the area have traditionally been higher than Houston rates, and presently are slightly lower than the statewide rate. As a general observation, the labor market may prove to be more competitive in a heavily industrialized area, such as Brazosport or Houston, than in a predominantly rural area. The relevance of this to an industry depends upon labor mobility, the ability of industry to attract labor and the availability of other location requirements.

An attractive real estate market and local environment are two additional factors which must be included in evaluating industry response to the study area. Land prices in the Brazosport area are competitive, although recent escalation has occurred due to stimulation by the proposed Seadock facility. Undeveloped, rural land ranges in price from $1,000 to $3,000 per acre. A median 1974 land price in the Brazosport area was $1,100 to $1,300 per acre, compared to a median price of $800 to $850 per acre in the Brownsville area, and $400 to $450 per acre in the Corpus Christi and Beaumont/Port Arthur areas (Schmedeman et al., 1974).

In response to the final industry requirement, the local environment is conducive to industrial growth. Brazosport has a diversified, expanding industrial base; construction expenditures total over $100 million per year. The median family income in Brazoria is comparable to that of all SMSA's in the United States ($10,433 compared to $10,469, 1969 data). The median family income in the Houston SMSA is slightly lower than the national average; however, the cost of living is also lower. Housing in the Brazosport area is in demand, with complete occupancy of rental units and a shortage of residences for sale. An expanded Houston-based construction trend is to be expected, however, as demand for housing increases (Seadock, 1975). Brazosport compares favorably with other coastal communities in tax rate. The average 1976 adjusted tax rate for representative coastal cities (Houston, Beaumont, Corpus Christi, Victoria, and Brownsville) was $0.8614 per $100 assessed valuation, compared to an average adjusted tax rate in the Brazosport community (Freeport, Lake Jackson, Clute, and Brazoria) of $0.735 per $100 assessed valuation (the adjusted tax rate is the gross tax rate multiplied by ratio of assessment).

Study Requirements

To fulfill the requirements of the study methodology, the selected site should not only be desirable from an industrial standpoint but should also minimize the constraints on the study itself. Probably the most limiting factor in a study of this scope is the availability of data. Compared to other potential sites, the Brazosport area is particularly suited in this respect due to the comprehensive environmental analysis performed as a prerequisite to the Seadock license application. These data and the subsequent environmental impact statement compiled by the Department of Transportation are also timely; data were collected generally between 1970 and 1976. Two planning units in the area which serve as regional and local data sources are the Houston/Galveston Area Council and the Brazosport Chamber of Commerce.

The Brazosport area is also particularly suited to study because of its proximity to existing facilities. The Dow Chemical Company located in Freeport is an excellent example of an integrated industrial complex which is served by an inland canal. Brazos River Harbor, also located in Freeport, is a deepwater terminal handling general cargo. Chocolate Bayou, located approximately 20 miles to the northeast, is a bargewater channel serving multi-industry developments.

Finally, the Brazosport area satisfies the study criteria in that it is representative of most Texas coastal environments. The area comprises a range of ecosystems, including tidal wetlands, coastal prairie, brushland, and fluvial woodland. The project interface with these systems will contribute to the applicability of the study results to locations, if not specific conditions, elsewhere on the coast.

In summary, the Brazosport area is the site selected for study of the inland canal concept for three primary reasons: 1) the area is naturally suited for an inland canal because of its geographic location on the coast, its interface with the GIWW, and its mainland-type Gulf shoreline; 2) the area is well adapted to industry location trends, particularly with respect to raw material and product distribution markets; and 3) the area is suited to the particular requirements of the study methodology, including data availability, proximity to existing facilities for analytic comparison and representation of coastal biologic environments.

Summary Description of the Study Area

The study area is located in Brazoria County, on the upper central Texas coast, bounded by the San Bernard River on the west and towns of Brazoria and Richwood on the north. The eastern boundary of the study area consists of a line formed by Swan Lake and Square Island Lake. The GIWW forms the southern boundary. The physical features are typical of the Texas Coastal Plain Physiographic Province, ranging in elevation from about 3 feet at the Gulfward boundary to about 26 feet at the northern boundary. Ecological systems in the area include sandy beaches along the Gulf shoreline, marsh at the lower elevations, and coastal prairie and fluvial woodlands on the higher elevations. Surface drainage in the area is generally poorly defined, consisting of a series of small, isolated lakes, bayous, and marshes within three major coastal drainage basins: the Brazos-Colorado River Basin, Brazos River Basin, and San Jacinto-Brazos River Basin. Dominant drainage features consist of the San Bernard River, Jones Creek, the Brazos River, and Oyster Creek.

The study area is characterized by an industrial nucleus in the vicinity of Freeport surrounded by the primarily residential communities of Surfside, Oyster Creek, Richwood, Lake Barbara-Clute, Lake Jackson, Brazoria, Jones Creek, and Quintana. These communities constitute an area commonly referred to as Brazosport.

The City of Freeport has the primary water transportation linkage in the Brazosport area, with waterfront facilities located along both sides of the Old Brazos River and at the Brazos River Harbor. Dow Chemical Company operates a barge canal extending from the Gulf Intracoastal Waterway to plants east and north of the City of Freeport.

The Gulf Intracoastal Waterway (GIWW), ranging from .5 to 2 miles inland from the Gulf, forms the southern boundary of the study area. The segment of the GIWW from Galveston to Corpus Christi is the second most utilized portion of the Texas Waterway, with 20,212,427 tons handled in 1970 (Miloy and Phillips, 1974).

The official planning agency of the area is the Houston-Galveston Area Council (HGAC), which includes the counties of Matagorda, Brazoria, Galveston, Chambers, Liberty, Harris, Fort Bend, Wharton, Colorado, Austin, Waller, Walker, and Montgomery. According to HGAC data (TPWD, 1975), the regional population in 1970 was 2,181,315, a 38 percent increase over 1960. Growth trends in the region indicate a pattern of future development surrounding the Houston metropolitan area, Galveston Island, and north to Montgomery County. A significant growth corridor is also projected from Brazosport to Angleton, trending along Highway 288 to Houston and along Highway 36 to Alvin (Figure 6).

Population in Brazoria County is anticipated to increase from 108,312 in 1970 to 750,000 in 2020 (Bureau of Business Research, 1976; TPWD, 1975), as compared to a 1920 to 1970 population increase of 87,608 (Bureau of Business Research, 1976). The largest existing land use in the study area is open rangeland and woodland. Industrial development in the Freeport community accounts for 42 percent of the county industrial acreage. The towns of Clute, Lake Barbara, Lake Jackson, and Richwood account for 46 percent of the residential acreage in the county. Public landholdings in and near the study area are the Clemens and Retrieve State Prison Farms, the San Bernard and Brazoria National Wildlife Refuges, public beaches, and Bryan Beach State Park.

Land use projections for Brazoria County (1970-1990) suggest a 21 percent increase in residential acreage, a 225 percent increase in commercial acreage, and 547 percent increase in industrial land. The projected industrial land use conversions (1970-1990) for Brazoria County are second only to Chambers County in an eight county analysis prepared by HGAC (TPWD, 1975).[1] Recent population growth in the Brazosport area has occurred primarily in the communties of Clute, Lake Jackson, and Richwood. The rapid growth in the area since 1940 is largely due to the location of two Dow Chemical Plants (Seadock, 1974). These and other aspects of the study area will be described in greater detail in subsequent chapters.

Study Area Selection References

Allen, B. L. et al. 1974. *Procedure for Location of a Least Impact Environmental Corridor for a Lineal Development.* Prepared for the Texas Water Development Board by Water Resources Center, Texas Tech University.

American Waterways Operators, Inc. 1976. *1974 Waterwide Plant Locations and Expansions: A Study in Economic Growth.* Arlington, Virginia.

Bureau of Business Research. 1976. *Atlas of Texas.* University of Texas at Austin.

Houston-Galveston Area Council. 1976. 1975 Census Tract Land Use, Brazoria County, Texas. Unpublished data.

Lochmoeller, D. C. 1975. *Industrial Development Handbook.* The Urban Land Institute, Washington, D. C.

McFarland, Frank, et al. 1976. *Coastal Inland Canals.* Interim Report (Draft). Prepared for the General Land Office, Coastal Zone Management Program by Texas A&M University.

1. Note that these projections may be more accurately represented as projections to year 2000 than 1990—*see* Seadock, (1974) p. 2. 1-4, vol. I.

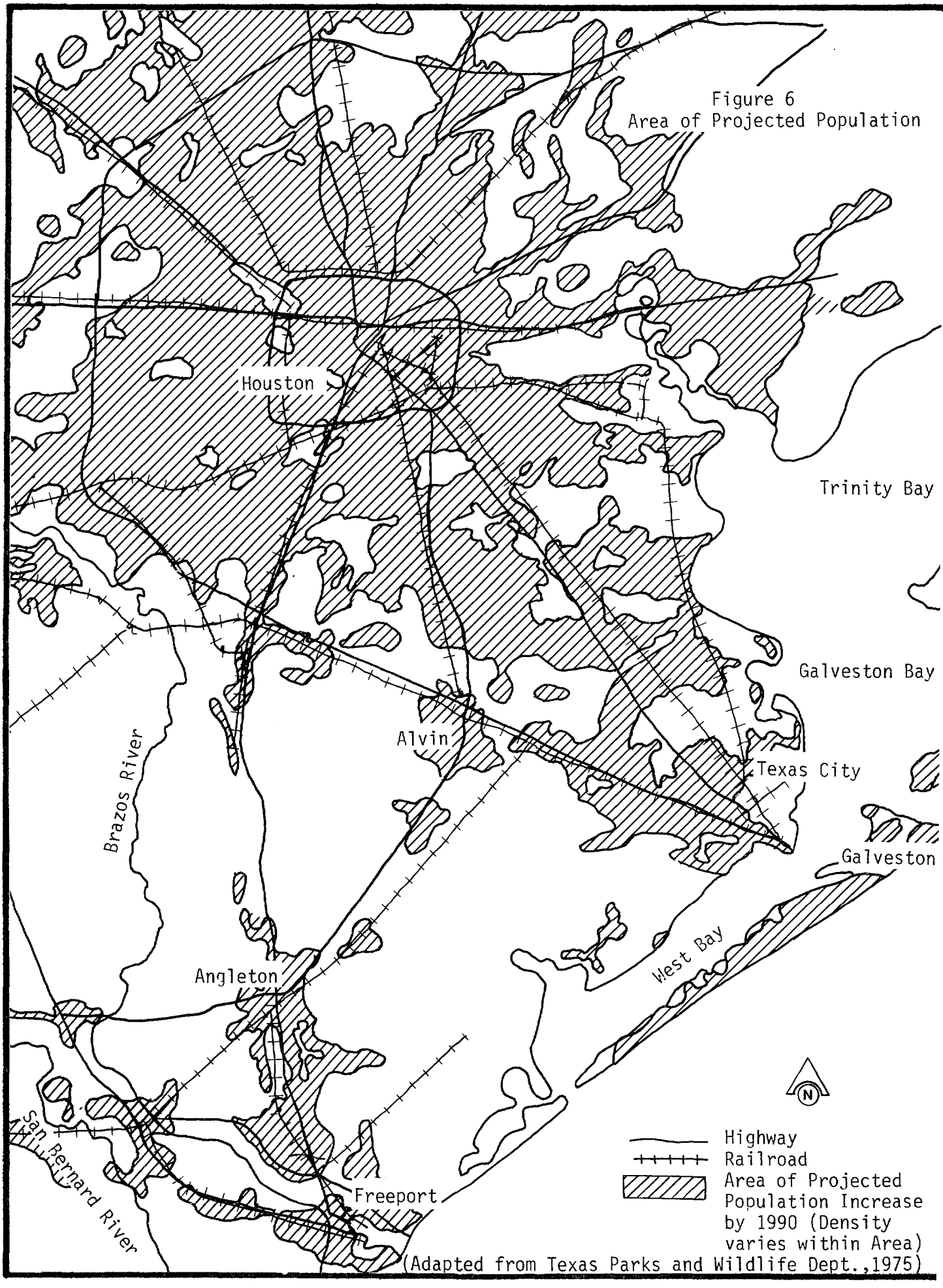

Figure 6
Area of Projected Population

(Adapted from Texas Parks and Wildlife Dept.,1975)

Miloy, John and Christian Phillips. 1974. *Primary Economic Impact of the Gulf Intracoastal Waterway on Texas.* Texas A&M University.

Minnesota Power and Light, and Northern States Power Company. 1976. Twin Cities to Forbes Transmission Project-Construction Permit Applications for a 5001345 KV. Transmission Facility. Minneapolis, Minnesota.

Panel on Future Port Requirements, 1976. *Port Development in the United States.* Prepared by the Panel on Future Port Requirement of the U.S. Maritime Transportation Research Board, Commission on Sociotechnical Systems, Washington, D. C.: National Academy of Sciences.

Schmedeman, Ivan W., et al. 1974. "Dynamics of the Rural Land Market." *Texas Agricultural Progress,* Vol. 20, No. 4, Fall, 1974, Agricultural Experiment Station, Texas A&M College Station, Texas.

Seadock, Inc. 1974. *Environmental Report.* Texas Offshore Crude Oil Unloading Facility. 3 Vols.

_____. 1975. *Deepwater Port License Application.* Seadock, Inc., Texas Offshore Crude Oil Unloading Facility.

Takel, R. E. 1974. *Industrial Port Development.* Bristol Scientechnica.

Texas Parks and Wildlife Department. 1975. *Regional Environmental Analysis of the Houston-Galveston Region, Texas Outdoor Recreation Plan,* Austin, Texas.

DESCRIPTION OF THE STUDY AREA ENVIRONMENT

This section inventories 1) climatic characteristics and air quality, 2) geology and substrate characteristics, 3) drainage systems, 4) ecosystems and wildlife, and 5) land use characteristics of the selected study area. The description provides background information for six environmental data maps used in selecting a least environmental impact corridor (see Maps 1-6) and for a detailed ecological systems description in part of the activity assessment routine (see Chapter IV-A-2).

Climatic Characteristics and Air Quality

The climate of the project area is characteristically sub-tropical, with short, mild winters and long, warm summers. Figure 7 presents mean minimum and maximum monthly air temperature and mean annual temperature patterns in Brazoria County. High humidity and a uniform yearly rainfall distribution are typical climatic conditions. Figure 8 presents typical seasonal and annual precipitation in Brazoria County. Heavy rainfalls are infrequent but are most likely to occur between June and August. Average net lake-surface evaporation is 16 inches per year (Seadock, 1974, p. 2. 1-15). There is an estimated four inches annually of excess rainfall after evapotranspiration in the project area (based on the Thornwaite method). Over a ten year period, the area may expect four to six years of excess rainfall, and from six to four years of 'drought' conditions.

Two principal wind patterns dominate this portion of the Texas coast: persistent gentle southeasterlies from March to November, and strong, shortlived northerlies from December to February (Figure 9). Wind speeds seldom exceed 45 miles per hour.

There is a relatively high probability of tropical storms landing on this part of the Texas coast. Between 1901 and 1973 there were 12 tropical cyclones of which 5 were designated as being of hurricane strength. Two of these were severe hurricanes (wind speeds greater than 100 mph and core pressure below 28 inches of mercury). There is, then, in any given year, a 16 percent chance that a tropical cyclone will cross this area, 7 percent chance of a hurricane, and a 3 percent proba-

Figure 7
Brazoria County Temperature Patterns

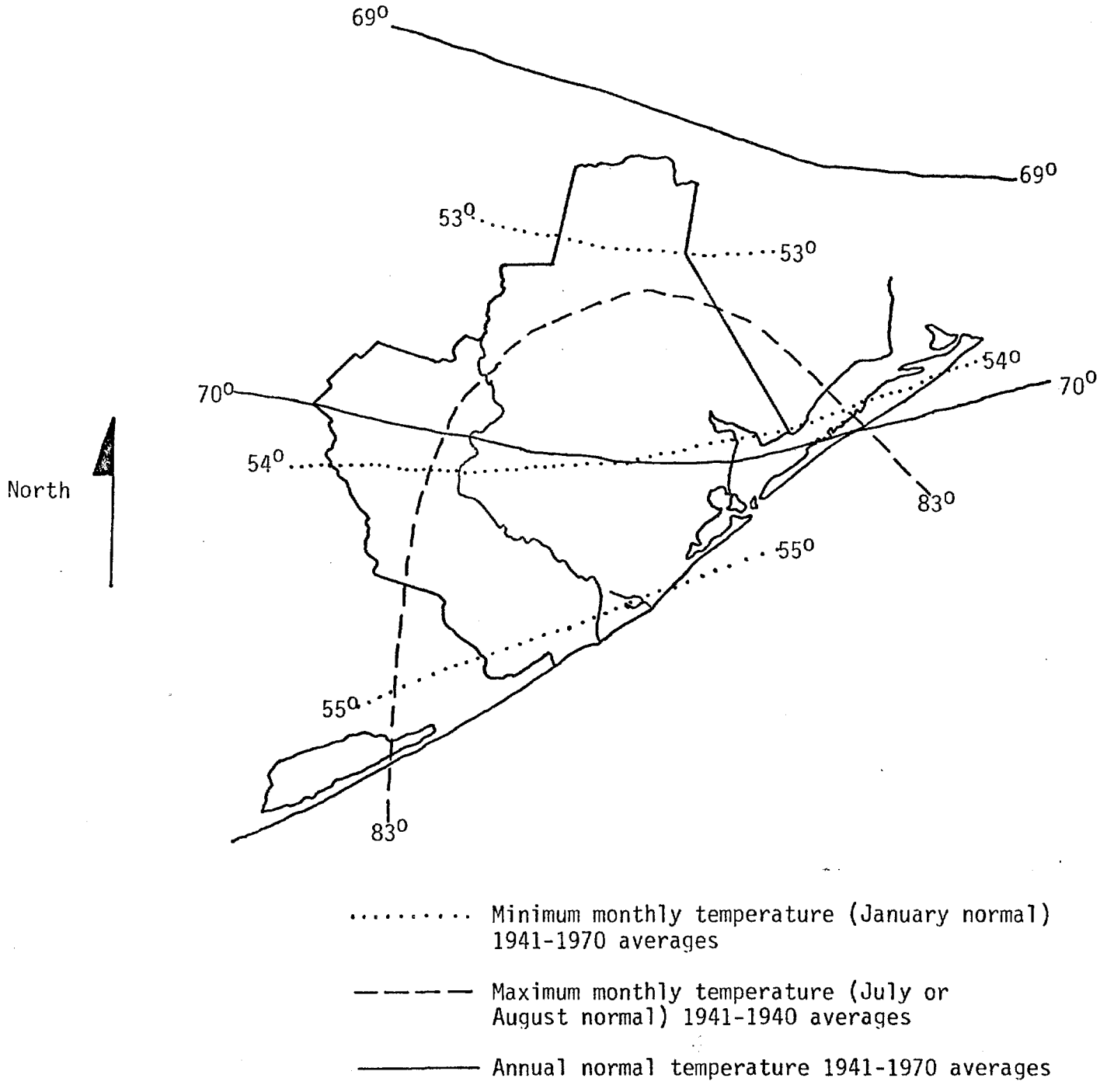

Source: Rice Center for Community Design and Research, 1976, Map 2.

Figure 8
Brazoria County Precipitation Patterns

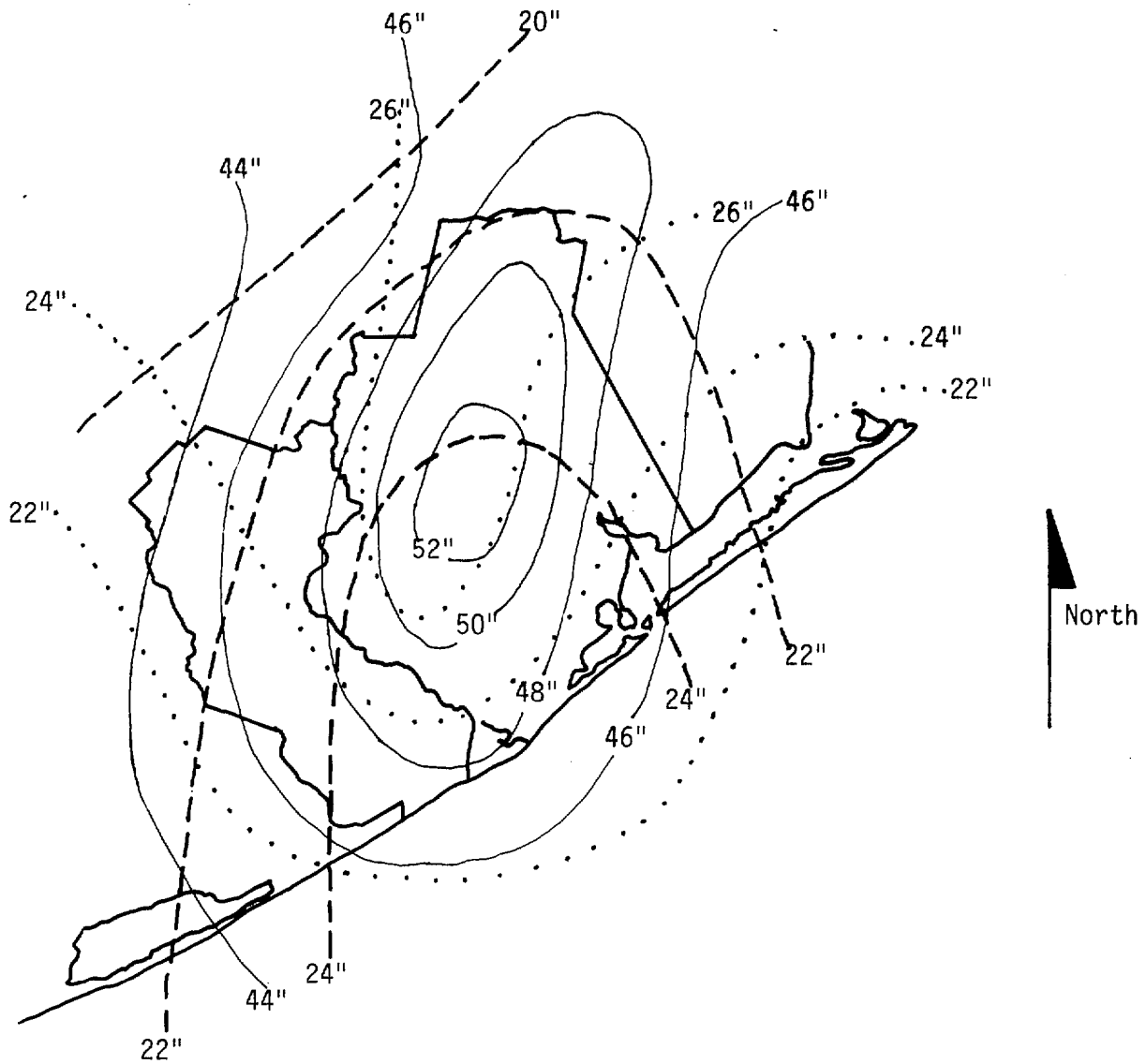

Normal "Summer" Rainfall (June-October) 1941-1970 averages

Normal "Frontal" Rainfall (November-May) 1941-1970 averages

Normal Annual Rainfall 1941-1970 averages

Source: Rice Center for Community Design and Research, 1976, Map 1.

Figure 9
Wind Current Frequency Rose at Galveston

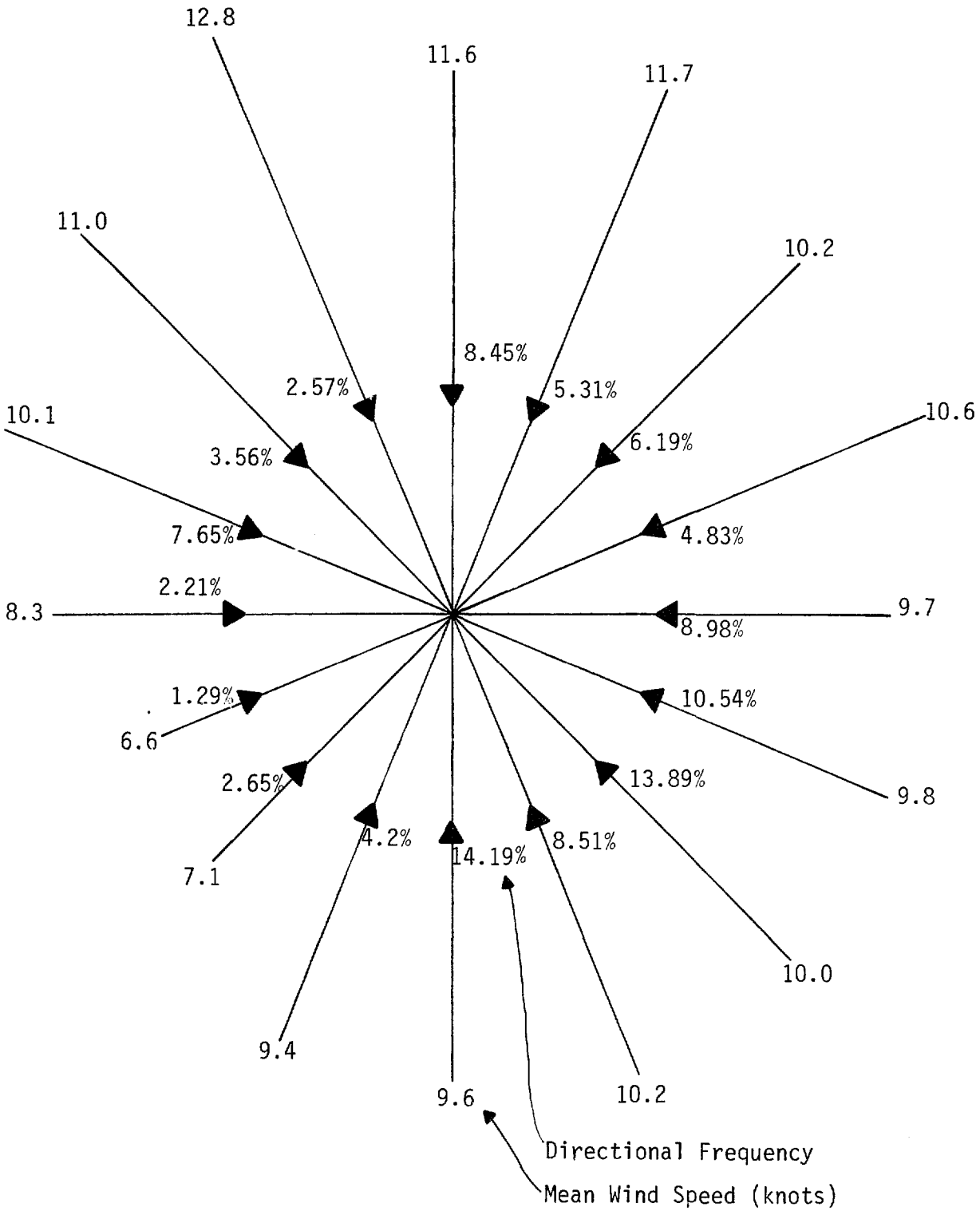

(Original data from U.S. Department of Commerce, 1973. Annual Wind Distribution by Pasquill Stability Classes, Galveston, Texas. NOAA, Environmental Data Service. National Weather Records Center, Asheville, North Carolina. Cited in: Seadock, Inc. 1974. Environmental Report.)

bility that the storm will be a severe hurricane (Rice Center for Community Design and Research, 1976). The probable hurricane months are August and September. Beulah, Celia, Carla, and Fern are recent hurricanes which affected the area. Only minor property damage in the more rural areas occurred, however, because these hurricanes made their landfall considerably to the south, and because the heavily industrial and populated areas between Freeport and Lake Barbara are protected by storm surge levees. Surge-tide flooding occurred inland as far as 8 miles, between the 5 and 10 foot elevation contours.

The local weather patterns which favor minimizing air quality impacts include moderate winds, and absence of long-term or frequent surface air inversions and unstable to neutral above-surface air layers. These factors combine to maximize air mixing and dispersion. In general, the mixing conditions and dispersion potential are good in the study area (Seadock, 1974, vol. I pp. 2. 2-5.-6).

Air quality information on much of the Texas coast is incomplete because of a lack of monitoring in rural areas and because of problems in assessing non-point air emission sources. Self-reported industrial air emissions for Brazoria County include, in tons per year (Texas Air Control Board, 1971):

Particulates	6,000
NO_X	60,000
SO_X	9,000
Hydrocarbons	150,000
Carbon Monoxide	180,000

Not included in this inventory are municipal incineration and non-point source emissions, principally auto and truck emissions. Such non-point source transportation emissions typically play a small yet statistically significant role in total atmospheric emissions of hydrocarbons and carbon monoxide. In the 13-county air quality control region including Brazoria County (but dominated by Harris and Galveston Counties), automobile hydrocarbon emissions represent 21 percent of industrial hydrocarbon emissions levels and are 17.4 percent of total hydrocarbon emissions (Rice Center for Community Design and Research, 1976, p. 104).

The composite structure of Texas coastal area air pollutant sources is presented in Figure 10. Gaseous emissions account for 98 percent by weight of total emissions. Carbon monoxide (CO) is the highest single air pollutant, followed by hydrocarbons. Over 70 percent of (CO) emissions and roughly 50 percent of hydrocarbon (HC) emissions are due to automobiles. Industrial chemicals and petroleum refining account for over 84 percent of industrial processing emissions. Municipal incineration accounts for about 60 percent of the particulate and sulfur oxides (SO_X) emissions in the solid waste disposal category. Aircraft emissions account for about 66 percent of particulate emission in the transportation category (Texas A&M University, 1973, p. IV-24).

Figure 10

Combined Emission Source Inventory

Emissions due to:	NO_X	SO_X	HC	CO	Particulates
Fuel Combustion	38%	0.1%	10.1%	-	11.2%
Industrial Processing	23%	95%	36.8%	28%	27.1%
Solid Waste Disposal	.6%	.7%	1.7%	1%	40.5%
Transportation	38%	4.2%	15.3%	71.2%	18.4%

(From: *Waste Management in the Texas Coastal Zone, p. IV-24.)*

The Texas Air Control Board currently has three monitoring stations at Freeport and Clute. Information from 1973-1974 and 1976 ambient air quality monitoring programs indicates that major air quality problems exist. Ozone levels of 0.145 ppm and 0.186 ppm (1973 and 1976) exceed the national standard (0.008 ppm maximum hourly average). Ozone is an early and continuing product of photochemical smog reactions between various pollutants, especially hydrocarbons, in the presence of sunlight. Non-methane hydrocarbon concentrations of 3.8 ppm and 4.5 ppm (1973 and 1976) frequently violate the respective national air quality standard (0.24 ppm 6-9 am. average). Finally, particulate concentrations of 48-73 $\mu g/m^3$ and 71 $\mu g/m^3$ (1973 and 1976) exceed the national 'secondary' standard (60 $\mu g/m^3$) indicating a known and anticipated adverse effect on public health (Texas Air Control Board 1974, 1977).

The Brazosport study area is part of the Houston SMSA Air Quality Maintenance Area designated by EPA (38 Fed. Reg. 30439, 1973), signifying a high priority requirements for the reduction of photochemical oxidants and particulate matter. Further, the EPA has zoned all the Texas Coastal area as a Class II Nondegredation area, allowing moderate emission increases accompanied by well controlled growth (39 Fed. Reg. 31001, 1974). Some industries are voluntarily following an offset policy, by which new industrial plant emissions must be accompanied by reductions in current plant emissions. The EPA offset policy is, however, yet in the formative stage. The Texas Air Control Board is still issuing permits in the area for air emissions if best available technologies are used.

Geology and Substrate Characteristics

Geologic History

During the late Mesozoic Era (about 150 to 80 million years ago) the Gulf was a shallow enclosed sea. Extensive carbonate reefs from Florida to the Yucatan Peninsula may have restriced Gulf water exchange with the open ocean. Under hot and arid climatic conditions, little fresh water and sediment entered the basin from North American streams, and evaporation from the Gulf surface resulted in hypersaline conditions. There were extensive salt and anhydrous gypsum deposits. The opening of the Gulf began in the Cretaceous period with a change in the North American tectonic setting. Nearly continuous Gulf sedimentation and subsidence has occurred since the beginning of the Cenozoic.

A picture of the Cenozoic history of Gulf coastal sedimentation may be painted as a "conflict between a rich source of (terriginous or continental) sediments and the waters of the Gulf of Mexico for possession of a (subsiding basin's margin)" (Williamson, 1959). Net sedimentation and seaward extension of the coastline since the Mesozoic-Cenozoic transition shows that deposition generally won the conflict. A general view of the Gulf Coastal Plain illustrates the broad depositional belts paralleling the coast resulted from the interaction of the geologic processes of alluvial delta construction and progradation, reworking of the deltaic sediments and longshore transport, marine sedimentation, subsidence, and relative sealevel change (Figure 11).

Groundwater

The Evangeline, lower Chicot, and upper Chicot Aquifers are the major components of the Gulf Coastal Aquifer supplying fresh groundwater in Brazoria County (Figure 12). However, only the upper unit of the Chicot supplies fresh to slightly saline groundwater in the study area; the downdip (Gulfward) limit of the two aquifers lower in the subsurface occurs to the north of the study area. Industrial water wells supplying moderately saline groundwater tap the lower Chicot in the Freeport area.

In much of northern Brazoria County, well water levels in the lower unit of the Chicot declined by about 30 to 50 feet between 1946 and 1967 (Sandeen and Wesselman, 1973. pp. 35-37). In the upper unit of the Chicot, no appreciable water level declines occurred over this time period except around Freeport, where locally as much as a 90 foot decline has occurred in well water levels which tap artesian sands. In comparison, water levels in large capacity wells in the

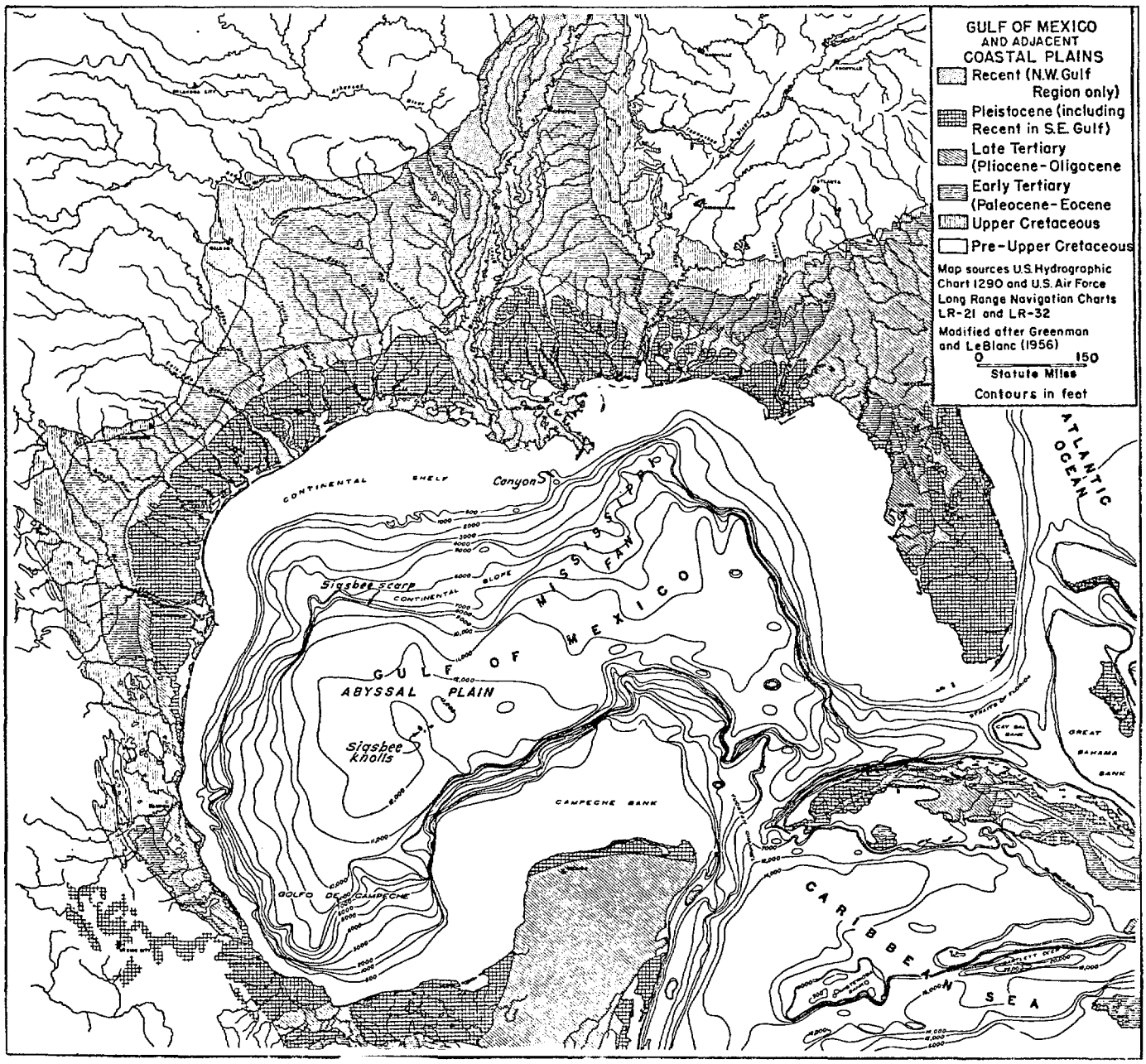

Figure 11

Generalized Geologic Map of the Gulf Coastal Plain and the Principal Hydrographic Features of the Gulf of Mexico

(After Greenman and LeBlanc (1956) and Ewing, Ericson, and Heezen (1958). Taken From Bernard and LeBlanc (1965).)

Figure 12

Generalized Gulf Coastal Aquifer
Profile Showing Chicot and Evangeline Aquifers

(Source: Louisiana Dept. of Conservation, 1963)

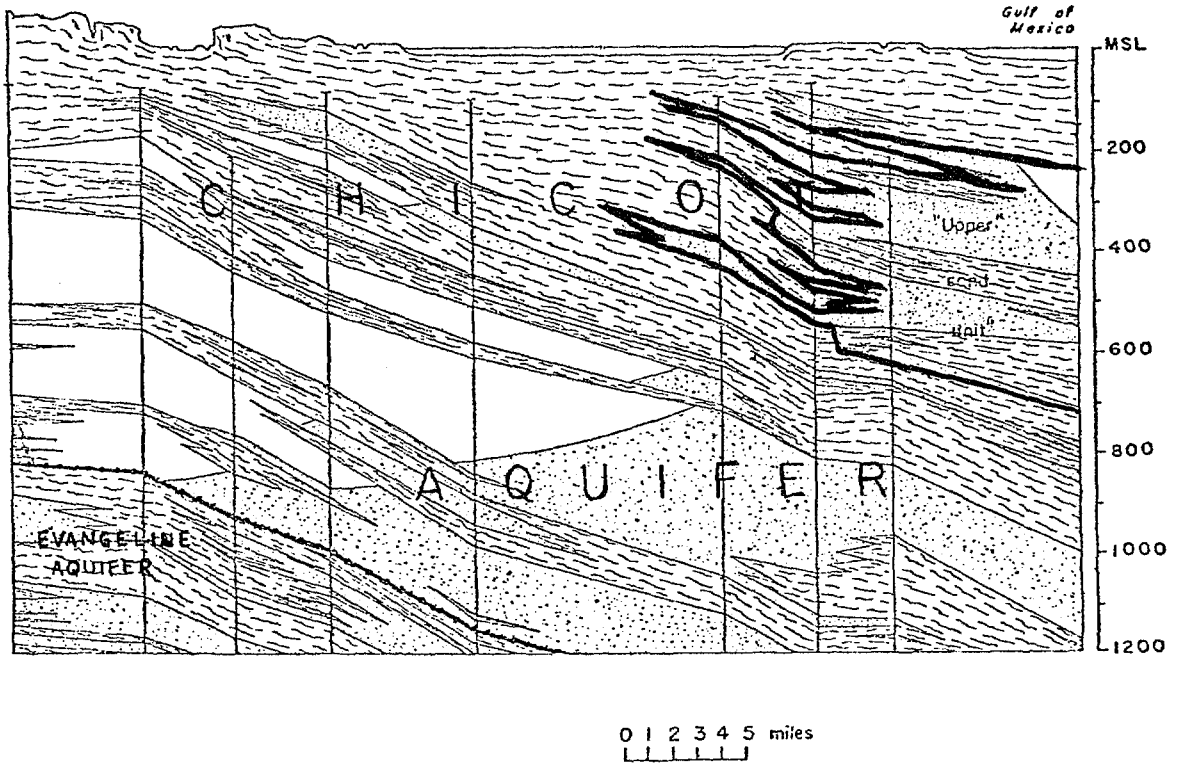

Sand or sand and gravel containing water (Chloride content less than 250 ppm)

Sand or sand and gravel containing water (Chloride content more than 250 ppm)

Clay and silt

heavily pumped zones of aquifers in the Houston area have declined about 90 to 370 feet in the last 34 years.

The pumpage of groundwater around Freeport has resulted in a 1.6 foot land surface subsidence, as measured between 1918 and 1959. Most of southern Brazoria County has experienced only slight subsidence (less than 0.5 feet). To the northeast of Angleton the amount of subsidence increases towards Houston at a gradient of one foot per 18 miles (Sandeen and Wesselman, 1973, p. 54). In comparison, areas in Houston in association with groundwater withdrawal and surface faulting have subsided as much as 5 to 8 feet (Brown et al., 1974).

Faulting

A suface fault is a fracture of the substrate which intersects the land surface. Most faults extend to depth below the Gulf Coastal Plain and are not a product of surficial phenomena. Conversely, not all sub-surface faults reach the surface. The surface expression of "deep" fault is a geologic hazard.

There are different types of faults. Growth faults in the Texas coastal area are associated with such large river-dominated, high mud areas as found in the coastal Brazos Basin. The principal zones of faulting occur at the boundary between delta-front sands and thick prodelta mud facies. Increased consolidation of the thick, highly compressible mud facies is generally believed to cause this fault development (Kreitler, 1976b, p. 6). Growth fault development is enhanced by Gulfward creep of the whole sedimentary mass (Bruce, 1973). Faulting may also be associated with regional basement tectonics (Shelton, 1968) and with salt tectonism (Murray, 1961).

Potential fault zones may be recognized by two methods. Long, regional lineations which are both subparallel and perpendicular to the coast, are apparent on aerial photographs. Also, demonstrable offset fractures, observed in the subsurface Tertiary sediment mass, may be extrapolated upward to the surface. In many cases the lineations coincide with the surface expression of subsurface faults, and in the Houston area, with known active faults (Kreitler, 1976b, pp. 8-15).

In the Houston-Baytown area activation of such faults has been known since 1926 to be associated with large-scale ground fluid (oil, water) withdrawal (Reid, 1973, pp. 19-24; Kreitler, 1976a). Inactive faults are not readily identifiable within urban areas until they become active and cause damage. This is because paving and other ground surface modification prevents the fault here from being apparent in high-altitude photography. Both active and inactive faults in rural areas are identifiable and mappable from aerial infrared photographs (Reid, 1973, p. 87).

In the inland canal project study area, long lineations which trend generally N 75° E and N 50° E cross between the Jones Creek and Clute areas. Another lineation striking N 45° extends from the Brazoria to Jones Creek areas, and a lineation strikes N 35° W just east of the community of Oyster Creek. Arcuate surface tracings of subsurface faults are in many places parallel and near these lineations. For example, an apparent fracture set occurs to the north and east of Oyster Creek. Of perhaps special interest is the surface expression of a fault located during Seadock's preparation of their *Environmental Report* (Seadock, 1974, supplemental vol. p. 2.1). This fault crosses the proposed location of Seadock's onshore terminal site southeast of the community of Jones Creek. However, it is not yet known if this fault is currently active.

The probability of movement of a particular fault is a function of 1) its apparent past activity as evidenced by surface manifestations; 2) the type of structure it is associated with in the subsurface (e.g., growth fault, salt dome deformation); and 3) its orientation with respect to any change in elevation of the piezometric surface (an imaginary surface coinciding with the static level of water in an aquifer, or the surface to which groundwater from an aquifer will rise under its full head) in the last ten years, and that change expected for the next twenty years (Reid, 1973, pp. 85-87).

It is not verified that any of the faults in the study area are or have been recently active. All of the faults described in this area appear to be related to deep-seated growth faults, although shorter fractures are likely to be associated with Clemens, Allen, Bryan Mound, and Stratton Ridge Salt Domes. Furthermore, it has been seen that the water levels in the local aquifers have declined and that subsidence has occurred, although both at a lesser scale than in the Houston area.

Thus it may be possible for faults in the inland canal project study area to become active, although a quantitative prediction of either the probability of movement or of the extent of movement, however small, cannot be made in this study. Should faulting take place comparable to that around Houston, vertical displacement across the fault scarp may be expected to range from less than 6 to 34 millimeters (mm.) per year and the zone of influence may extend from 6 to 65 feet on either side of the fault (Reid, 1973).

Substrate Characteristics

The most important factor affecting the current substrate characteristics in the study area was the activity of the ancestral Brazos-Colorado River systems. These systems combined to fill their sizable drowned-river valley estuary between 3,000 and 1,500 years ago, once modern sea level had been reached. This coastal sedimentation and estuary-filling has resulted in the unique feature along the upper Texas coast of a well-developed mainland shoreline without an offshore barrier island.

The Brazos-Colorado river systems drain an area of more than 88,200 square miles, making the river system one of the largest feeding the Gulf of Mexico and one of the major sources of sediment to the northwestern Gulf basin. The coastal delta lobe of this system has developed a cuspate shape representing the effect of opposing levels of energy involved in supplying sediments, basin subsidence, and the reworking of sediment. Within the broad area of the cuspate lobe (Figure 13), there are serveral sub-deltaic features in which modern geologic processes have resulted in present substrate characteristics. Such features include natural levees and overbank deposits, channel and point bar deposits, upper and lower delta plain and floodbasin mud and silt deposits, reworked prodelta sand and silt, and other interdistributary marshes, lakes, and swamps.

Figure 14 lists the substrate units characterizing these geologic environments, their physical properties, and their suitability for alternate human uses. In developing these physical properties analyses, the Bureau of Economic Geology states that they were 'derived from basic map units on the environmental geology map by applying quantitative test data to the areally defined and mapped environmental geologic units. The (BEG) physical properties maps are designed to provide regional data for a variety of uses applicable both to the surface and to depth of approximately 60 feet. The resulting map characterization is, however, qualitative. The map units and their capability evaluations cannot be substituted for specific site testing and evaluation, but can be used to rate large tracts of land for a particular use." (McGowen et al., 1976, p. 59).

The Group III substrates represent a composite of meanderbelt sands, levee and crevasse splay deposits and fluvial distributary sediments. They follow the courses of the Oyster Creek meander belt, the Brazos River, and the three distributary channels extending to the GIWW between the Brazos and San Bernard Rivers. These substrates include most of the upland area above 10 feet in elevation. The Group I substrates, predominantly resulting from interdistributary floodbasin muds and silts, occur in the areas between these channels. Finally, fresh and brackish water swamps and marshes (Groups IV and V) occur in low-lying areas within cut-off meander loops along Oyster Creek; and brackish water marshes dominate lowlying inter-ridge areas to the west of the Brazos River, usually to height less than five feet above sea level.

Soils

There are four principal 'orders' of soils in the study area, identified and classified on the basis of soil properties and similarity of genesis. The factors affecting soil development are type of parent material, climate, vegetation, relief, and drainage. Climatic conditions may be accepted as

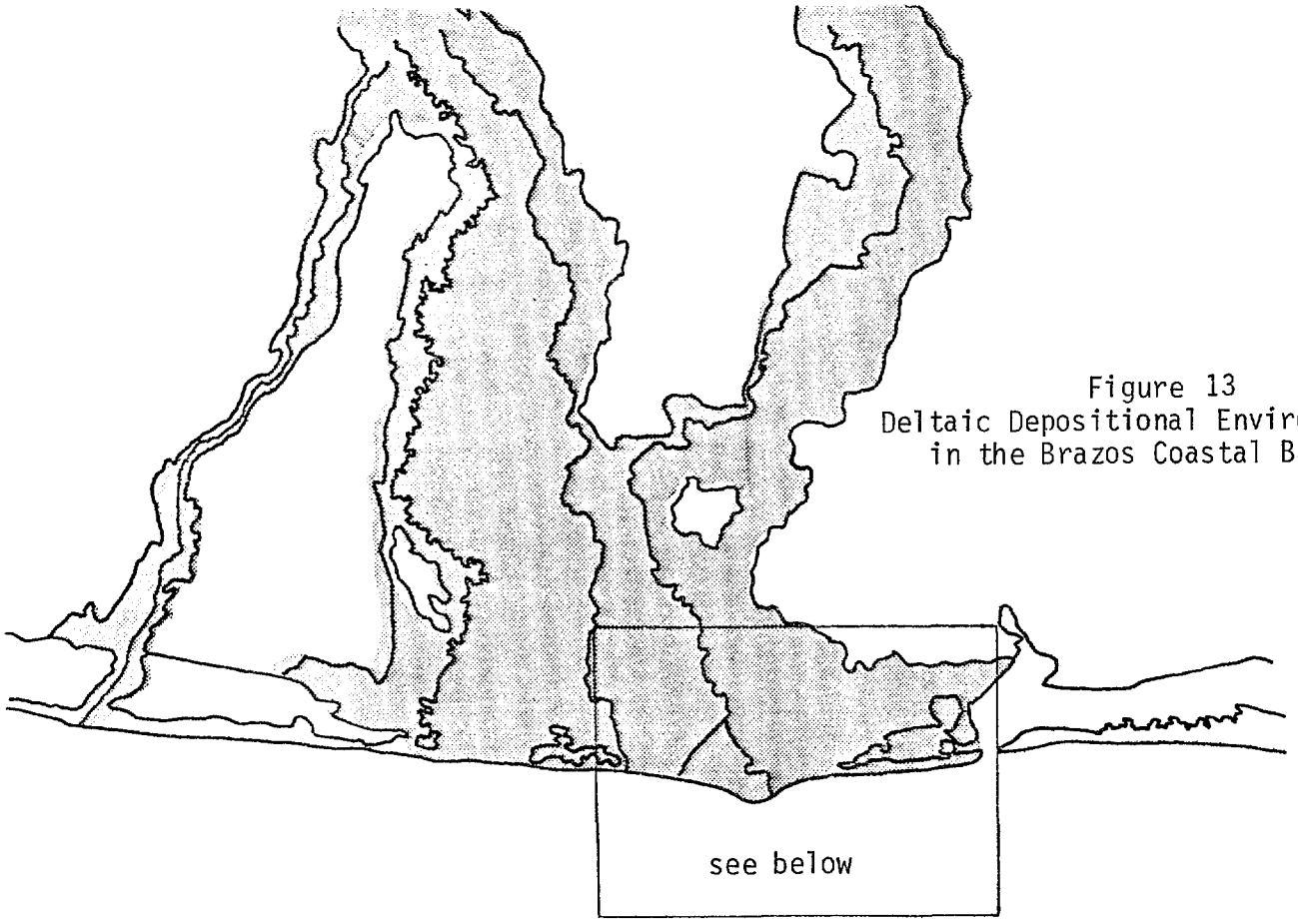

Figure 13
Deltaic Depositional Environments
in the Brazos Coastal Basin

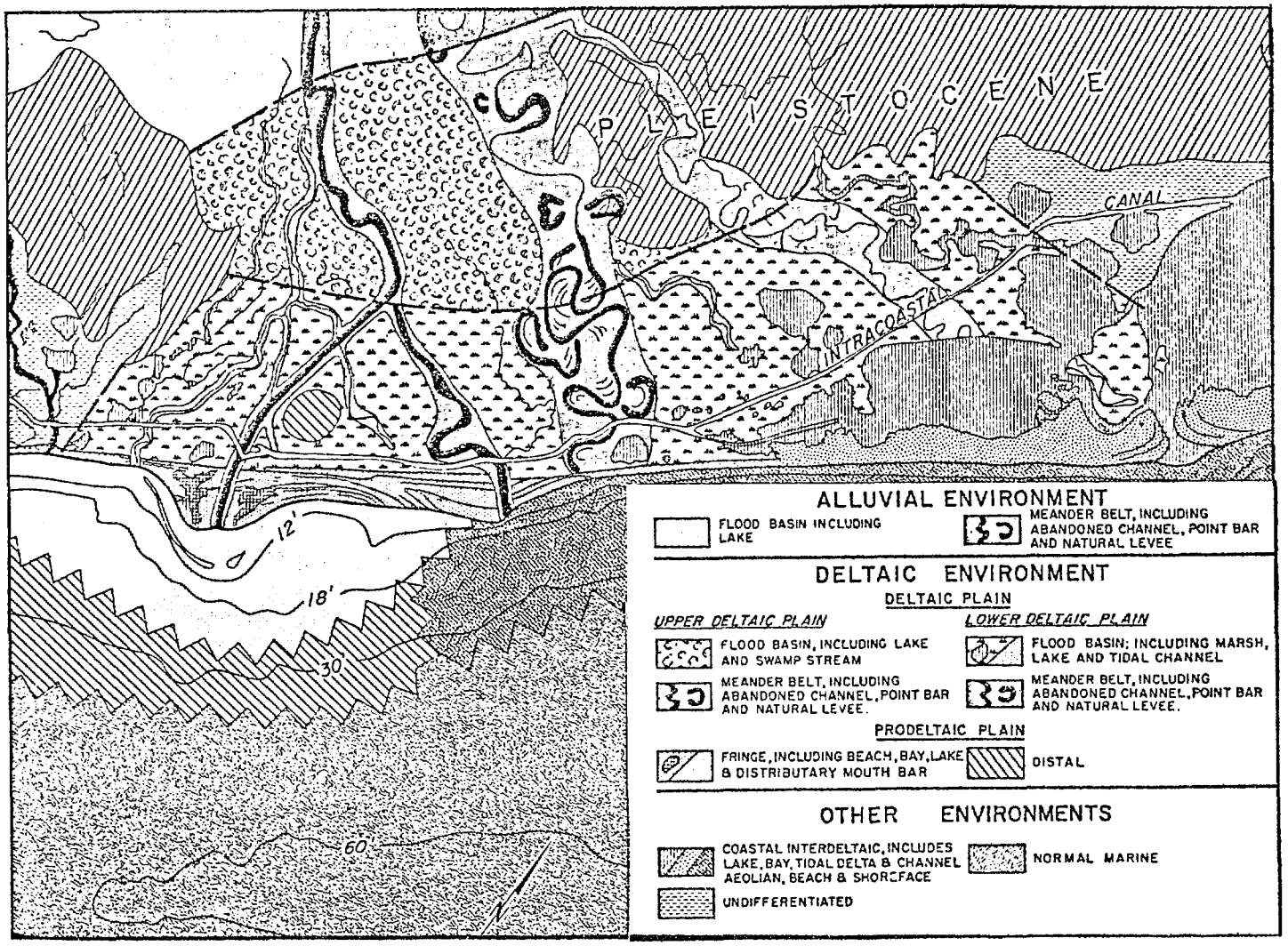

(Source: Bernard et al.,1970.)

Figure 14

Physical Properties Groups Natural Suitability Analysis

Suitability is evaluated on the basis of natural properties and may be improved by special engineering and construction methods. Significant properties considered as positive criteria for evaluating land-use suitability (+ = satisfactory; − = unsatisfactory; o = possible problems):

(1) Road construction: earthen structures and fill material—low shrink-swell potential, low compressibility, and low plasticity.
(2) Road construction: base material—low compressibility, low shrink-swell potential, and high shear strength.
(3) Road construction: grade material—low compressibility, low shrink-swell potential, and high shear strength.
(4) Fill material: topsoil—loam or sandy/silty clay composition.
(5) Fill material: general, below topsoil—silty/sandy clay composition with low to moderate shrink-swell potential.
(6) Foundation: heavy—high load-bearing strength, low shrink-swell potential, and good drainage.
(7) Foundation: light—low shrink-swell potential.
(8) Underground installations—low shrink-swell potential, high load-bearing strength, and good drainage.
(9) Buried cables and pipes—low shrink-swell potential and low corrosivity.
(10) Excavatability—ease of digging with conventional machinery.
(11) Waste disposal: septic systems—moderate permeability, low to moderate shrink-swell potential, and good subsurface drainage.
(12) Waste disposal: solid waste—low permeability and good surface drainage.
(13) Waste disposal: unlined liquid waste retention ponds—low permeability.
(14) Earthen dams and dikes: low permeability, moderate shear strength, and moderate compressibility.
(15) Water storage: unlined reservoirs or ponds above ground-water level—low permeability.
(16) Water storage: reservoirs or ponds below ground-water level—high permeability.

GENERAL PHYSICAL PROPERTIES	PRINCIPAL ENVIRONMENTAL GEOLOGIC MAP UNIT	LAND USE: ROAD CONSTRUCTION (1) Earthen structures and fill material	(2) Base material	(3) Grade material	FILL MATERIAL (4) Topsoil	(5) General—below topsoil	FOUNDATIONS (6) Heavy	(7) Light	(8) Underground installations	(9) Buried cables and pipes	(10) Excavatability	WASTE DISPOSAL (11) Septic systems	(12) Solid waste	(13) Unlined liquid waste retention ponds	WATER STORAGE (14) Earthen dams and dikes	(15) Unlined reservoirs or ponds above ground-water level	(16) Reservoirs or ponds supplied by ground water
Group I Dominantly clay and mud, low permeability, high water-holding capacity, high compressibility, high to very high shrink-swell potential, poor drainage, level to depressed relief, low shear strength, high plasticity, high to very high acidity, high corrosivity	Interdistributary muds, barrier-strandplain-chenier swales, abandoned channel-fill muds, overbank fluvial muds, mud-filled coastal lakes and tidal creeks	−	−	−	o	−	−	o	−	−	+	−	+	+	o	+	−
Group II Dominantly sand, high to very high permeability, low water-holding capacity, low compressibility, low shrink-swell potential, good drainage, low ridge and depressed relief, high shear strength, low plasticity	Beach, foredunes, barrier-strandplain-chenier vegetated flats, Pleistocene barrier and strandplain sands	+	+	+	o	+	+	+	+	+	+	o	−	−	−	−	+
Group III Dominantly clayey sand and silt, low permeability, moderate drainage, moderate water-holding capacity, low to moderate compressibility and shrink-swell potential, level relief with local mounds and ridges, high shear strength	Meanderbelt sands, alluvium, levee, crevasse splay, distributary sands, bay-margin sand and mud, Pleistocene fluvial, distributary, delta-front sands	+	+	+	+	+	o	+	o	+	+	+	o	o	+	o	o
Group IV Coastal marsh, fresh to brackish, very low permeability, high water-holding capacity, very poor drainage, depressed relief, low shear strength, high plasticity, high organic content, subject to salt-water flooding, high to very high corrosivity	Fresh to brackish and closed brackish marsh, marsh-filled abandoned coastal lakes and tidal creeks	−	−	−	−	−	−	−	−	−	−	−	−	−	−	−	+
Group V Inland swamp and marsh, permanently high water table, very low permeability, high water-holding capacity, very poor drainage, very poor load-bearing strength, high organic content, subject to frequent flooding, very high acidity	Swamp, inland marsh, marsh-filled channels	−	−	−	−	−	−	−	−	−	−	−	−	−	−	−	+
Group VI Tidal flat and salt marsh, permanently high water table, very low permeability, high water-holding capacity, very poor drainage, very poor load-bearing strength, very high corrosivity, subject to frequent tidal inundations	Tidal flat and salt marsh	−	−	−	−	−	−	−	−	−	−	−	−	−	−	−	−
Group VII Made land and spoil, properties highly variable, mixed mud, silt, and sand, reworked spoil commonly sandy and moderately sorted with properties similar to those of Group III	Subaerial spoil heaps or mounds, subaerial reworked spoil, subaqueous spoil, made land	HIGHLY VARIABLE: USE WITH CAUTION															

(from: Environmental Geologic Atlas, Texas Coastal Zone, University of Texas Bureau of Economic Geology)

uniform over this small area. Relief is also approximately a constant factor in coastal Brazoria County. Although vegetation has certainly affected soil development, in this discussion the difference of affect of one vegetative type or another is not distinguished. Soil properties, in turn, have only a marginal influence on vegetative patterns in the area, as subsequently discussed under 'Ecosystems.' Thus, this discussion of soils emphasizes genesis from parent material and the effect of drainage conditions.

Four main soil 'orders,' the highest classification level used to organize soils, may be recognized in the study area, loosely paralleling the environments of deposition of the parent material. The correspondence of these soil orders and the underlying geologic substrates is not precise, because drainage conditions have affected the soil properties. The soil orders which have been identified are Mollisols, Entisols, Vertisols, and Alfisols.

The Mollisols are clayey and silty with soft granular or crumb like structures which are not hard when dry. These soils have a black, organic rich surface horizon. All of the great groups of the Mollisols in the study area are characterized by seasonal water saturation and intermittant dryness. Included in this order are the Bernard Series (Vertic Arguaquoll), Morey Series (Typic Agiaquoll), Harris Series (Typic Haplaquoll), Pledger Series (Vertic Haplustoll), Asa Series (Fluventic Haplustoll), and Miller Series (Vertic Haplustoll).

The Bernard Soils were formed on montmorillonitic clay substrates of the Beaumont Formation, an upper delta plain deposit. The Morey Soils were formed in very silty deltaic alluvium and now occur in depressed upland areas. They include silty loam at the surface and silty clay loam in the subsurface. The Harris Clay is formed in the coastal marshes of saline sediments. The Pledger Soils characterize upper delta plain areas, and were formed on stratified calcareous clayey and silty floodbasin sediments. The Asa Soils also occur in a floodbasin setting, are associated with overbanking channels, and were formed on a calcareous, stratified, loamy silt, alluvial sediment. The Asa soils tend to lack distinctive horizons. The Miller Soils are lower delta plain floodbasin silty clays formed on alluvium, and have tendencies to shallow cracking during intermittent dry periods.

Entisols are mineral soils without natural horizons or with horizons not fully developed. Included in this order in the study area are the Veston Series (Typic Fluvaquent—proposed to be Typic Halaquent) and Norwood Series (Typic Udifluvent). The Veston Series included saline, loamy soils which were formed in the setting of coastal flats and ridges. The Norwood Series include calcareous loamy alluvium typically occurring in river bottomlands.

Vertisols have a high content of swelling clays. The udert vertisols form shallow, wide surface cracks during seasonal dry periods. Included in this order in the study area is the Lake Charles Series, which was formed on an alkaline marine clay of an interdistributary bay environment.

The Alfisols are characterized by high degrees of weathering and leaching, often producing concretionary nodules at the subsurface. The surface soil is usually brown to grey. The Clodine Series has a characteristic lack of organic material at the surface layer, and is a siliceous coarse loam formed on unconsolidated alluvium adjacent to meanderbelt sands in the study area.

Soil associations are groups of soil series which occur in an individual and characteristic pattern over a geographic region. The Pledger-Miller Soil Association covers more than 50 percent of the more coastward part of the study area. Its inner boundary roughly parallels the coast to about the five foot elevation contour between the San Bernard River and Oyster Creek. This Association is typified by floodbasin calcareous and montmorillonitic clays. On broad areas between the San Bernard and Brazos River are the Harris Clay, occurring in most of the present brackish marsh, and the Veston Soil Series, an entisol comprising the topographic ridges separating the marshes.

The Miller-Norwood-Pledger Association covers more than 50 percent of the upland part of the study area. The Norwood Soils occur on the floodplain river bottoms of the Brazos and San

Bernard Rivers and of Oyster Creek. Both Miller and Pledger soils now cover most of the upland prairie, along with occurrances of Lake Charles and Asa Series.

The Harris-Morey-Clodine Association underlies the study area to the east of Oyster Creek. The Harris Clay underlies much of the lower marsh further to the east. Most of the soils in this area are part of the Clodine silt loam. Depressional areas within the Clodine Soil, now often containing fresh water swamps and marshes, are probably underlain by the Morey Soil Series.

An analysis of soil suitability and use capability is presented in Figure C1, Appendix C.

Drainage Systems

The study area includes portions of the San Jacinto-Brazos, Brazos, and Brazos-Colorado river basins. In the San Jacinto-Brazos Coastal basin, Big Slough drains the northeastern corner of the study area to the east into a series of lakes and the intracoastal waterway. Oyster Creek extends inland across the study area, draining much of the north and east-central areas. Oyster Creek is tidally influenced for most of its extent in the project area, and has a drainage basin of 36 square miles. Both Big Slough and Oyster Creek are former courses of the Brazos River. Oyster Creek was entrenched in its present course, and had developed an extensive meander belt, before the river abandoned this channel (McGowen et al., 1976, p. 44). Many ox-bow lakes occur along the course of Oyster Creek, formed by meander cut-off.

In 1930 the Brazos River was diverted from its old channel at a point north of Freeport to its present course. The Brazos is tidally influenced 23 miles inland, which comprises most of its extent in the study area. This tidal segment of the Brazos River has a drainage area of 268 square miles. There have been subsequent modifications to the area's natural drainage including the construction of the Dow barge canal and several drainage canals. Graded drainage sloughs extend southwestward from the Lake Jackson-Clute communities toward the Brazos River to carry excess stormwater runoff.

The San Bernard River forms the southern boundary of the study area. The San Bernard is navigable for 26 miles with a nine foot draft as a Federal Navigation Project to Sweeny. The river is tidally influenced to several miles north of Sweeny.

Three to four miles to the west of the Brazos River lies a ridge less than five feet above the surrounding lowlands. This ridge was formed through natural levee-building by an abandoned channel of the Brazos River. This ridge, just to the west of Jones Creek, forms a drainage divide between the Brazos and San Bernard Rivers. Jones Creek in the eastern subbasin originates north of the community of Jones Creek and flows through a series of small lakes to its mouth on the intracoastal waterway. A smaller and narrower ridge with an intermittent stream lies between Jones Creek and the Brazos River.

In the western subbasin east of the San Bernard River, several small permanent and intermittent streams drain the coastal marshes through McNeal and Pelican Lakes before entering the San Bernard River just inland of its confluence with the intracoastal waterway. Redfish Bayou, between these lakes and the subbasin divide, has both permanent (lower reach) and intermittent (upper reach) flow conditions, and extends inland to the south of the Perry Landing community. Redfish Bayou has been grouped with the lower San Bernard River and Cedar and nearby lakes as an area of particular concern (Texas General Land Office, 1975). The bases of concern generally include its vulnerable natural habitat, high productivity, its role in replenishing coastal resources, and its function in supply fresh water to the coastal brackish water marshes. Redfish Bayou is also an area of concern as a spawning ground for shrimp and finfish, notably redfish (*Sciaenops ocellata*).

In addition to these major channels, there are many other irregular and unconnected intermittent surface streams and ponds. The abundance of such features is related in part to the even, flat topography across the study area. The Brazos River, unlike most coastal river segments, does

not have an entrenched valley. Not only has its estuary been filled by sedimentation, but fluvial deposition has raised and filled the level of land throughout the area.

Soils to a great extent determine percolation and runoff of rainwater. In general, a clayey soils have low percolation rates and water tends to run off. Silty, loamy, and sandy soils allow percolation. Given a sufficient hydrolic gradient, water will move horizontally through the coarse silty and loamy soils at a much greater rate than through clayey soil, as the former higher permeability.

Most of the coastal area included in the Pledger-Miller Soil Association is brackish marsh underlain by clayey soils. Over much of this area the land surface elevation is less than three feet MSL. Due to the nature of clayey substrates, most of the drainage into this low-lying area is probably from sheetflow runoff rather than ground water movement. Water may percolate into the Veston Loam, which comprises the intermarsh ridges, and then laterally and seaward towards the clayey substrates of the marshes.

The 'upland' Miller-Norwood-Pledger Association contains, in general, somewhat coarser grained soils. In the upland area, water may percolate into the ground more than runoff due to greater soil permeability, generally less soil water saturation, and due to the stabilizing influence of grasses. Water percolating into the upland prairie's soils may be recharging the uppermost Chicot Aquifer.

Ecosystems and Wildlife

The climate in the study area is very favorable to vegetative growth due to a normal annual precipitation of 47 to 51 inches, an estimated annual surplus of rainfall after evapotranspiration on the order of three to four inches, and uniform seasonal temperatures between approximately 53° and 83° F., with a growing season almost year-round.

As was previously discussed, most of the area's soils have poor drainage characteristic with slow percolation. Therefore, rainwater will slowly enter the root zones of the vegetated areas and once the soils are saturated, the water will remain for long periods because of the soil's generally high water holding capacity. Much of the study area has low relief and is less than five feet above sea-level. Therefore, the area is subject to various extents of tidal inundation and infrequent saline surge-flooding during severe Gulf storms. Those areas of less than three foot elevation are typically periodically submerged, brackish water marshes.

In addition to topography, the course of major fluvial systems affects the distribution of vegetative ecosystems. The frequency of fluvial flooding, the generally more sandy substrates accompanying overbanking areas of the river levees, and the higher ground near the major channels are parameters delimiting the extent of water-tolerant hardwood species and other associated woody plants.

Between the coastal marshes and fluvial (river-associated) woodlands are swaths of coastal prairie. The prairie may be divided into two communities, Gulf cordgrass and savannah-shrub. The transition between these two communities is usually gradual, determined mainly by elevation and frequency of brackish water flooding and to a large extent by grazing practices.

In the following sections the several ecosystems in the study area are described in terms of their areal distribution, their soil associations and flooding characteristics, and dominant plant communities and associated wildlife usage. Additionally, the effect of land management practices in altering the native condition of the ecosystems is noted.

Brackish-Water Marshes

Brackish marshes in the study area occur predominantly inland to approximately the three foot contour and west of the Old Brazos River channel (Brazos Harbor). Marshes extend in lineal belts further inland along tidal channels or small bayous. The continuity of the marsh is broken by coastal lakes (McNeal, Pelican, and Jones) and by small positive relief features. The small change in

elevation along ridge flanks is in places sufficient to significantly change the substrates' wetness, and thereby delimits the distribution of marsh vegetation.

Brackish-water marshes occur relatively independently of soil types in the study area due to the dominant influence of brackish to fresh water flooding. The area lacks continuous sheet flow of water from the uplands typifying large deltaic marshes. Thus the water conditions are more variable, tending towards fresh water conditions after heavy rainfalls and tending towards saline conditions when the marsh's water supply is mainly from tidal exchange (through the Intracoastal Waterway to the Gulf of Mexico). Overall, however, this low area may be considered a brackish water marsh, with salinity decreasing inland across the marsh. Nutrient levels in the water and substrate of the marsh is mainly a factor of self-supplied vegetative decay and to a lesser extent from nutrients from upland runoff. Water turbidity varies whether input is fresh sheetflow or saline tidal overflow and subsequently may vary within the marsh.

The coastal lakes lying within the tidal marsh have similar water characteristics. Salinity may be more variable than surrounding marsh areas as these lakes are collecting basins for small creeks. The coastal lakes may act as local staging areas for much of the water flow into and out of the marsh in the western sub-basin of the study area. The small water bodies along Jones Creek may serve a similar function in the eastern sub-basin.

The characteristic feature of the tidal marsh is a highly productive marsh vegetation. *Distichlis spicata* (saltgrass or marsh spikegrass) dominates this area's marsh vegetation; *Scirpus olneyi* (olney bulrush) is a common producer. A 10 to 12 thousand kilogram per hectare annual productivity value may be representative of a healthy *D. spicata* assemblage in this area (Seadock, supplemental volume 1974, p. 2.3), however, little of this production is directly used in the marsh food web. Rather, bacteria and their altered biochemical products of marsh vegetation decay are the important food sources for small invertebrates (primary consumers). These species may be utilized by a second level of consumers (blue crab—*Callinectes sapidus,* spot—*Leiostomus xanthurus,* anchovy—*Anchoa mitchelli,* and tidewater silverside—*Menidia beryllina*). Members of a final trophic level often are not permanent residents of the marsh, but may include migratory carnivorous/omnivorous waterfowl or mammals which live in the upper marsh or adjacent ecosytems. This may be the major transfer of energy from the marsh to upland ecosystems. It may be deduced that since tidal exchange/flushing of the marsh is restricted, much of the unconsumed organic matter collects until it is washed out by seasonal floods or periodic storms, rather than by tidal cycle export.

Significant populations of migratory puddle ducks and geese make use of the marsh habitat and the marsh-oriented coastal prairie located further inland. The annual wintering goose population (primarily blue, snow, white-fronted, and Canadian) of the area was estimated at 125,000 (h. Garner, pers. comm. 1977), although the population varies with the previous year's wetness and hence, the winter habitat quality. The proportion of ducks to geese fluctuates over the years. The duck population in 1976 was estimated near 25,000 (h. Garner, pers. comm., 1977). Most of the ducks and geese do not breed in the region; and exception is the mottled duck (J. Dutz, TPWD, pers. comm., 1977).

Another important member of the marsh community is the American Alligator (*Alligator mississippiensis*), which ranges in the study area through most of the tidal reach of the Brazos River; a fresh-water marsh bordering Salt Bayou east of Oyster Creek; the brackish marshes, especially near creeks and tidal channels; and along the Gulf Intracoastal Waterway. The Brazoria County population is estimated at 5,000 and is increasing. American Alligator habitat in the country totals more than 162,000 acres (TPWD, 1975, p. 37).

The native marsh has been altered to various extents by human practices. The Intracoastal Waterway truncated and diverted the marsh drainage pattern and decreased tidal influence by removing direct association with the open Gulf. The upper marsh is grazed by cattle and may be burned, usually more frequently than every three years, to improve vegetation palatability (Seadock, 1974 supplemental vol. p. 2.3-2). Hunting and trapping probably have affected marsh characteristics to a lesser extent.

Coastal Prairie

The coastal prairie extends typically from about the three foot contour, bordering along marshland, to an inland elevation of more than 15 feet in places. The coastal prairie covers the greatest areal extent of any ecosystem in the study area. Two major components of the coastal prairie may be recognized: Gulf cordgrass prairie and shrub-savannah. These two ecosystems are delineated by elevation, wetness, and to a lesser extent by substrate. Grazing also affects their distribution, as discussed later.

Gulf Cordgrass Prairie. Gulf cordgrass prairie is the lower-lying, seaward component of the coastal prairie. West of the Brazos River, the brackish marsh forms the seaward limit of the cordgrass prairie. Indeed, some sources include the cordgrass prairie with the coastal marsh as an upper or inland marsh component (McGowen et al., 1976, p. 69). On the other hand, the Gulf cordgrass prairie may extend to the intracoastal waterway, as in the area east of the Old Brazos River.

The inland boundary of the cordgrass prairie generally follows a discontinuous line between 5 and 10 feet in elevation. The 'belt' pattern is interrupted by community and industrial developments in the Freeport-Clute area, by elevated ridges extending into the cordgrass prairie (which are included in the shrub-savannah community), and by low-lying fresh water marshes along the courses of Oyster Creek and Big Slough.

The cordgrass prairie is infrequently subject to fluvial flooding, storm surge tides, and to tidal flow during unusually high tides (e.g., southwest of Jones Creek). West of the Brazos the supporting substrate is predominantly of Pledger and Veston soils formed in interdistributary alluvium. The substrate is usually saline and clayey, providing habitat good for grasses and legumes but poor for wetland plants (U.S.D.A., 1972).

The cordgrass prairie most subject to saline influence, whether native to the soil or from periodic flooding, is dominated by *Spartina spartinae* (gulf cordgrass). Western ragweed (*Ambrosia psilostachya*) is at least a subdominant species, especially in those areas subject to heavy grazing pressure. Prairie pleatleaf (*Nemastylis geminiflora*) is very common during the early part of the growing season (Seadock, 1974, p. 2.3-11).

The Gulf cordgrass prairie, for all its tendencies towards wetland association, supports a terrestrial type of food web. Plant-feeding insects support numerous insectivorous birds (mockingbirds—*Mimus pollyglottus,* eastern meadowlark—*Sturnella magna,* seaside sparrows—*Ammospiza maritima*). Hispid cotton rats (*Sigmodon hispidus*) are the most common small mammals in the area. Various carnivorous birds hunt over the cordgrass prairie and adjoining savannah. The short-eared owl (*Asio flammeus*), red-tailed hawk (*Buteo jamaicensis*), Swainson's hawk (*B swainsoni*), and sharp-shinned hawks (*Accipiter striatus*) are winter residents. The marsh hawk (*Circus cyaneus*) is a permanent resident of the prairie grasslands.

Range grazing is the major use of the cordgrass prairie, especially in the higher and drier extents of the grassland. Other developments on the cordgrass prairie include Seaway's oil terminal south of Gulf Park, sand quarries east of Oyster Creek, and scattered residential subdivisions (e.g. off from Brazoria County Road 792 south of Slough Ridge Creek).

Shrub-savannah. Shrub-savannah characterizes the components of the coastal prairie which lies inland from the cordgrass prairie, and extends inland far beyond the study area. The shrub-savannah community extends into the cordgrass community following the higher elevations of silty levee and crevasse-splay deposits along Big Slough, Ridge Slough, and Oyster Creek to the east of the Brazos, and along the interbasin divide west of Jones Creek. Its distribution includes areas only infrequently flooded and occurs on nonsaline, clayey, loamy, and calcareous soils of floodplain alluvium, mixed with an appreciable amount of montmorillonite. The soils are moderately alkaline and calcareous to neutral in the surface and moderately alkaline and calcareous below. Drainage of the shrub-savannah follows low gradient streams into the major sloughs and bayous flowing into the brackish marshes or major rivers (including Oyster Creek and the Brazos and San Bernard Rivers).

The seaward limit of the savannah is mainly limited by factors associated with elevation (e.g., wetness). Therefore, in those broad areas of the coastal plain where relief is less than one percent, the savannah may imperceptibly grade into the cordgrass prairie. In areas of greater relief, particularly along the aforementioned 'ridges,' the transition of savannah to cordgrass may be abrupt.

The shrub community consists of woody plants ranging in height from two to nine feet, including huisache (*Acadia farnesiana*), mesquite (*Prosopis juliflora*), retama (*Parkinsonia aculeata*), and live oak (*Quercus virginiana*). Bluestem and Indiangrass are dominant grasses over much of the savannah. As may be expected, the shrub community may intergrade spatially with the out fringe of fluvial woodlands, although the species composition markedly changes across the ecosystems boundary.

The plant bug (*Trigonotylus pulcher*) and meadow grasshopper (*Conocephalus fasciatus*) are the important insect species found in the shrub-savannah community. Common mammals include hispid cotton rats, cottontail rabbits (*Sylvilagus floridanus*), raccoons (*Procyon lotor*), coyotes (*Canis latrens*), striped skunk (*Memphitis memphitis*), and armadillo (*Dasypus novemcinctus*). White-tailed deer (*Odocoileus virginianus*) occur in the wooded areas in low density (1 to 2.9 deep per 100 acres), primarily using the savannah as a feeding ground (TPWD, 1975, p. 18-19).

Important avian members of the community include hawks, bobwhite quail (*Colinus virginianus*), mourning dove (*Zenaidura macroura*), flycatcher (*Muscivora forficata*), and sparrows. Sandhill cranes (*Grus canadensis*) are known to winter on the savannah of this area, foraging on all parts of the grains and wild plants. Hawks and vultures use the shrub for perches and prey on the small mammals, principally the hispid cotton rat. Quail, doves, and other insectivores/herbivores feed on seed during the winter and on insects during the summer (Seadock, 1974, p. 2.3-13).

The shrub-savannah is, perhaps, the ecosystem being most severely altered by grazing. Burning has been a common practice to maintain preferable grasses, but appears to be decreasing due to air quality considerations. The heavy grazing and decreasing use of fire is allowing significant invasion of woody shrubs into the savannah, notably huisache and osage orange (*Machura pomifera*). Some shrub-savannah areas west and south of Jones Creek are periodically converted to dryland farming, alternating with improved pasture.

In many areas, the difference in location of an upland savannah-type community and of a cordgrass-type community appears to be not a natural pattern, but a temporal response to grazing. During a field reconnaissance by the study team, an association between current grazing and savannah vegetation was observed. In areas which recently had little grazing, as indicated by the height of plant growth, the vegetation was clearly of the cordgrass association. In areas with more grazing, with plant height cropped almost evenly in patches over a large field, an admixture of cordgrass and grasslands communities could be seen. Finally, areas showing evidence of heavy grazing seemed to be completely of a savannah-type vegetation. These contrasts were strikingly seen to abut sharply at artificial barriers such as roads and fences in a manner not explicable by natural spatial variance.

This interpretation, which is in contrast to that made during Seadock field studies, may be supported by observations in the coastal area from Rockport, Texas to Lake Charles, Louisiana (Allen, 1950, p. 60). Marshhay cordgrass (*Spartina patens*) and olney bulrush on a saltmeadow marsh are the first species to disappear under overgrazing. They are replaced to a large extent temporarily by needlegrass rush (*Juncus romerianus*), seashore saltgrass (*Distichlis spicata*), and seashore paspalum (*Paspalum vaginatum*). Finally, these are replaced by a variety of annuals and unpalatable herbs.

Therefore, in conclusion it may be postulated that the cordgrass community is the natural climax vegetation in the area under undisturbed conditions. Under grazing and land management

pressures, a savannah-grasslands community attains dominance. Certain grazing practices may encourage the invasion of woody shrubs into the 'savannah,' over a long term. It is possible for such an area to revert back to a cordgrass community.

Fluvial Woodlands

Fluvial woodlands occur as the seaward tip of a major water-tolerant hardwood ecosystem along the Brazos-Colorado fluvial belt. They extend into the study area along the Brazos River to north of the Dow Industrial complex and along Oyster Creek to the community of Oyster Creek. Their distribution is broken by agrarian practices in the Clemens and Retrieve State Farms, and by the community developments of Clute, Lake Jackson, and Richwood.

The setting of the fluvial woodlands is on nearly level high bottomlands on soils predominantly of the Miller-Norwood-Pledger Association. These soils were formed in stratified, calcareous, loamy alluvium. They are well drained with slow runoff and slow to moderate permeability.

The fluvial woodland provides the most heterogeneous habitat of any of the ecosystems in the study area, for within parts of the wooded area occur both small fresh water marshes and small prairies in open areas. In the wooded area, pecan (*Carya illinoenis*), live oak, hickory (*Carya cordiformis*), and sugarberry (*Celtis laevigata*) are common species, the latter two being invaders over the past 40 years (Seadock, 1974, p. 2.3-14). There is a varied and indistinct brush or shrub layer throughout most of the woodland. Salt marsh mosquitoes (*Acdes sollicitans*) are the dominant insects in the woodlands. The woodlands provide excellent, if limited in area, habitat for fox squirrel (*Sciurus niger*) and gray squirrel (*S. carolinensis*) as well as oppossum, white-footed mouse, swamp rabbit, and armadillo. Bobcats (*Lynx rufus*) have been observed.

The avian use of fluvial woodlands is mainly by migratory species, including Baltimore orioles, fly catchers, and more than 15 warbler species. Cardinals and vireos are resident herbivores and insectivores, respectively. Owls and vultures are the dominant predators (Seadock, 1974, p. 2.3-14).

A comparison of U.S.G.S. topographic maps and aerial photographs shows in the last 15-25 years that the distribution of the woodlands has been decreasing around the fringes, due to increasing rangeland development, and also under pressure of subdivision development.

Fresh-water Marsh

Fresh-water marshes and swamps occur in the study area mainly along the course of Oyster Creek, in a low area south of Salt Bayou, and between Big Slough and Bastrop Bayou. These marshes are generally present at slightly higher elevations than the coastal brackish water marshes. However, the influence of fresh water overbank flooding overwhelms any saline influence, mainly during storms, which might make these marshes tend to brackish water conditions. The freshwater marshes are very shallow water bodies of very limited areal extent.

The vegetation of the inland freshwater marsh includes rush (*Juncus romerianus*), bulrush (*Scirpus* sp.), cattail (*Typha* sp.), and sloughgrass (*Spartina pectinata*). Several water-tolerant trees may inhabit fresh-water swamps, including the dwarf palmetto (*Sabal minor*), baldcypress (*Taxodium distichum*), elm (*Ulmos* sp.), mulberry (*Morus* sp.), and water oak (*Quercus nigra*). Typical associated wildlife occurring in the freshwater marsh/swamp habitat includes nutria, muskrat, otter, alligator, raccoon, oppossum, snakes, and waterfowl.

Land Use

Six major categories of land use in the study area have been identified: industrial, residential, rangeland, fluvial woodland, brackish marsh, and public/governmental holdings. Fluvial woodlands and brackish marsh are not significant in human utilization. Land use in the public/governmental category includes two State Prison Farms, where cropland is the major land use, and the Brazosport Navigation District's port and storage facilities and dredged material disposal areas. Figure 15 presents, by census tract, the type and intensity of land use in the study area. Figure 16

Figure 15

Land Use by Census Tract

Census Tract No.	Residential	Commercial + Services	Industrial	Education	Open Space	Resource Production	Highway Row	Vacant	Water	Total
612i	819.86	76.69	11.62	—	278.35	1.5	—	21,581.91	2497.27	25,237.26
613i	135.71	35.65	6.8	4.5	—	—	—	22,847.03	923.2	23,952.89
620i	1038.04	217.24	294.39	88.0	6.64	5.25	—	34,844.45	659.4	37,153.41
621i	289.27	11.36	—	—	14,606.0	—	—	35,425.65	3722.12	54,054.4
622	298.36	5.4	0.47	22.8	—	—	—	25,826.83	1135.74	27,289.6
623	186.79	9.31	0.5	—	—	0.75	—	7,402.68	215.37	7,814.4
624	37.81	102.14	2149.47	—	0.5	27.0	132.24	18,335.03	1590.39	22,374.48
625	1399.44	148.34	16.21	222.3	57.72	—	110.78	2,873.16	19.6	4,847.55
626	516.3	195.52	2.5	106.0	14.0	7.0	53.89	2,228.86	45.8	3,169.87
627i	221.4	17.55	39.5	—	4.0	11.75	—	8,546.54	189.65	9,030.87
628	313.9	155.86	63.6	83.4	65.62	—	—	2,271.79	226.7	3,180.87
629	622.93	159.1	124.92	53.08	63.35	8.25	—	17,395.26	1521.77	18,948.66
631i	247.89	11.3	480.02	—	3882.8	1.5	—	31,048.57	3582.12	39,255.2
Total	6126.71	1145.46	3190.0	560.28	18,978.98	65.5	297.07	230,628.76	16,329.13	277,334.08

(Source: Houston-Galveston Area Council, unpublished data, 1975.)

Figure 16

Census Tract Map
(See Figure 15)

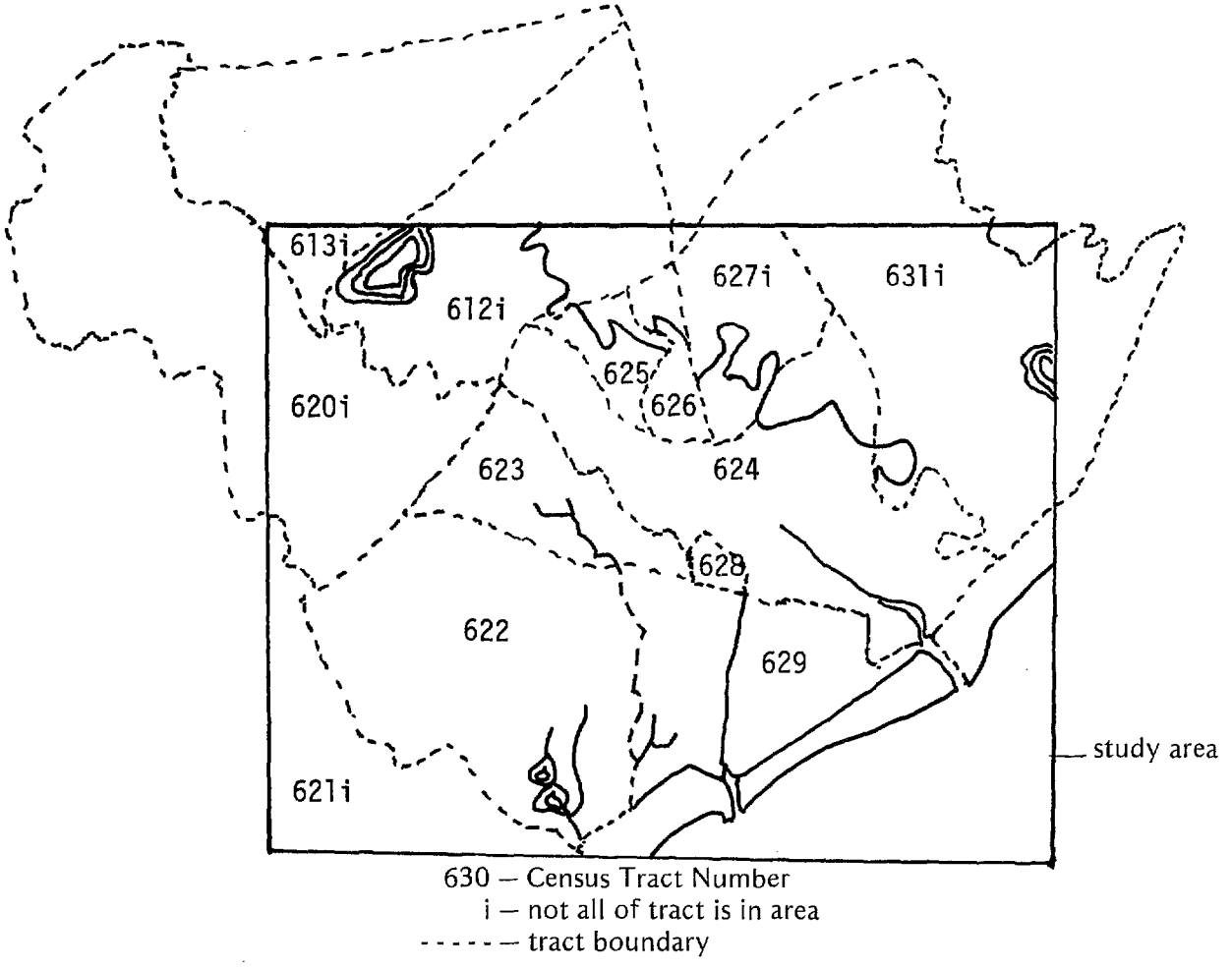

shows the location of the census tracts within the area. Residential and industrial land uses as a composite account for three percent of the study area, in approximately two to one proportions. About six percent of the area is water (rivers, lakes, reservoirs, etc.). Eighty-three percent is 'vacant,' or undeveloped. This great fraction represents both marsh habitat and rangeland used for cattle grazing.

The major transportation routes in the study area include State Highway 288 from Freeport to Angleton (17 miles) and to Houston (60 miles); State Highway 36 from Freeport to Brazoria (15 miles), West Columbia (26 miles), Rosenberg (59 miles), and connections with U.S. 10 (87 miles); State Highway 332 from Surfside through Lake Jackson to Brazoria; FM 2004 from Richmond to Hitchcock (31 miles); FM 521 west from Brazoria; and FM 2611 from Jones Creek west to Sargent. Figure 17 shows the daily vehicle usage of these major routes.

Rail service in the area consists of the Missouri Pacific Railroad, which connects industrial sites near Freeport to Houston. At Angleton the north-south and east-west railroads intersect. The east-west line connects the area to Bay City and Texas City.

The Brazoria County Airport is the only public airport in the Brazosport area. It has a 5,000 foot concrete runway and is located to the northwest of the community of Lake Jackson. These facilities are shared with Dow Chemical Corporation with operates its own terminal at that site.

Figure 17

1975 Traffic Map
Annual Average 24 Hour Traffic Volume
(Source: Texas Highway Dept.)

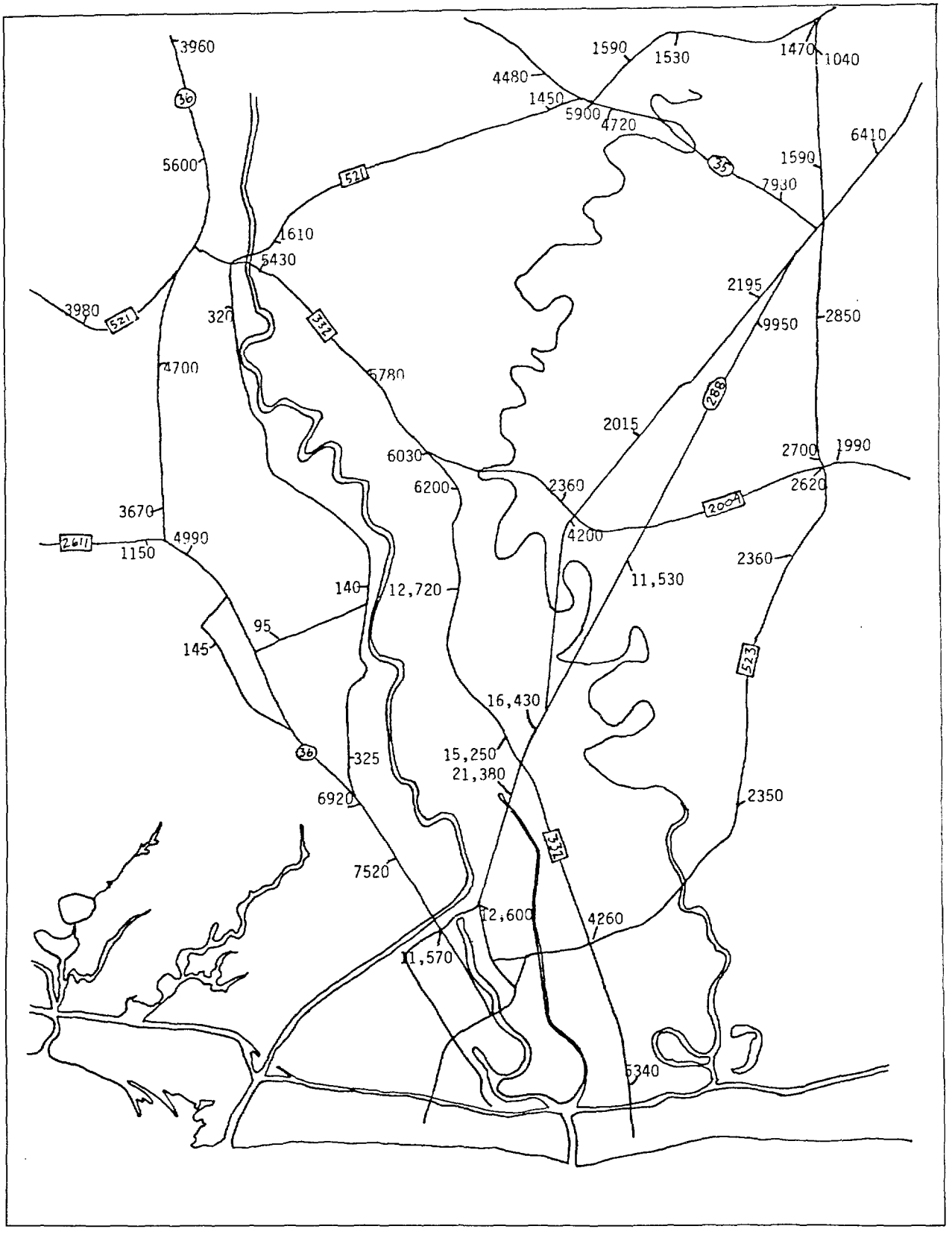

Major and minor pipelines and transmission lines crisscross the area, with some of the rights-of-way bearing multiple pipelines.

Social and Infrastructural Characteristics

Brazoria County covers an area of 1,422 square miles, with the county seat located in Angleton. The Brazosport area occupies 270 square miles within the county. Brazosport is composed of nine separate municipalities and a number of unincorporated neighborhoods. The municipalities include: Clute, Freeport, Lake Jackson, Brazoria, Jones Creek, Oyster Creek, Quintana, Richwood, and Surfside. The unincorporated neighborhoods include Bryan Beach and Gulf Park.

The Brazosport area is distinctive in that while it contains these distinct municipalities and neighborhoods, it tends to function as one community. Not only do many residents of a particular town work or shop in the others, but also the area shares a number of service systems. The Brazosport Independent School District serves most of the area, with the exception of the Brazoria municipality. There is a single, daily newspaper—*The Brazosport Facts.* There is a Brazosport Mayors Association and a Brazosport Chamber of Commerce. Similarly, there are a number of cultural associations which link the area, such as the Brazosport Community Concert Association.

Since these municipalities and neighborhoods do tend to interact extensively, it is assumed that general characteristics of the whole Brazosport area should be considered in this study. In addition, it is assumed that the impacts as the result of canal construction will be distributed over the area. However, issues or impacts which are particular to a specific area of Brazosport will be identified.

Brazoria County, which is part of the Houston SMSA, had a 1970 population of 108,312 (U.S. Census data). While more recent population figures are available (see Figure 18) for certain of the cities in the Brazosport area, the 1970 census is the only source of complete population characteristics. Unfortunately, the organization of the Census data makes it difficult to separate the Brazosport municipalities from the Brazoria County statistics. In addition, Oyster Creek, Quintana, and Surfside have only recently incorporated and Jones Creek has recently reincorporated. This makes acquisition of exact population statistics difficult. Figure 18 presents exact figures when they were available and approximations in the other cases.

Figure 18

Brazoria County Population Statistics

	Population
Brazoria	1,681[1]
Clute	6,023[1]
Freeport	11,997[1]
Jones Creek	2,100[2]
Lake Jackson	3,376[1]
Oyster Creek	2,500[2]
Quintana	21[2]
Richwood	1,452[1]
Surfside	1,500[2]
Total for Brazosport Area	44,900[1]
Total for Brazosport Area	58,000[2]

[1]Source: Texas Municipal Taxation and Debt, 1976 (1970 Population Figures).

[2]1977 estimates—Brazosport Chamber of Commerce.

Figure 19

Population Age Profile
Brazoria County, Texas

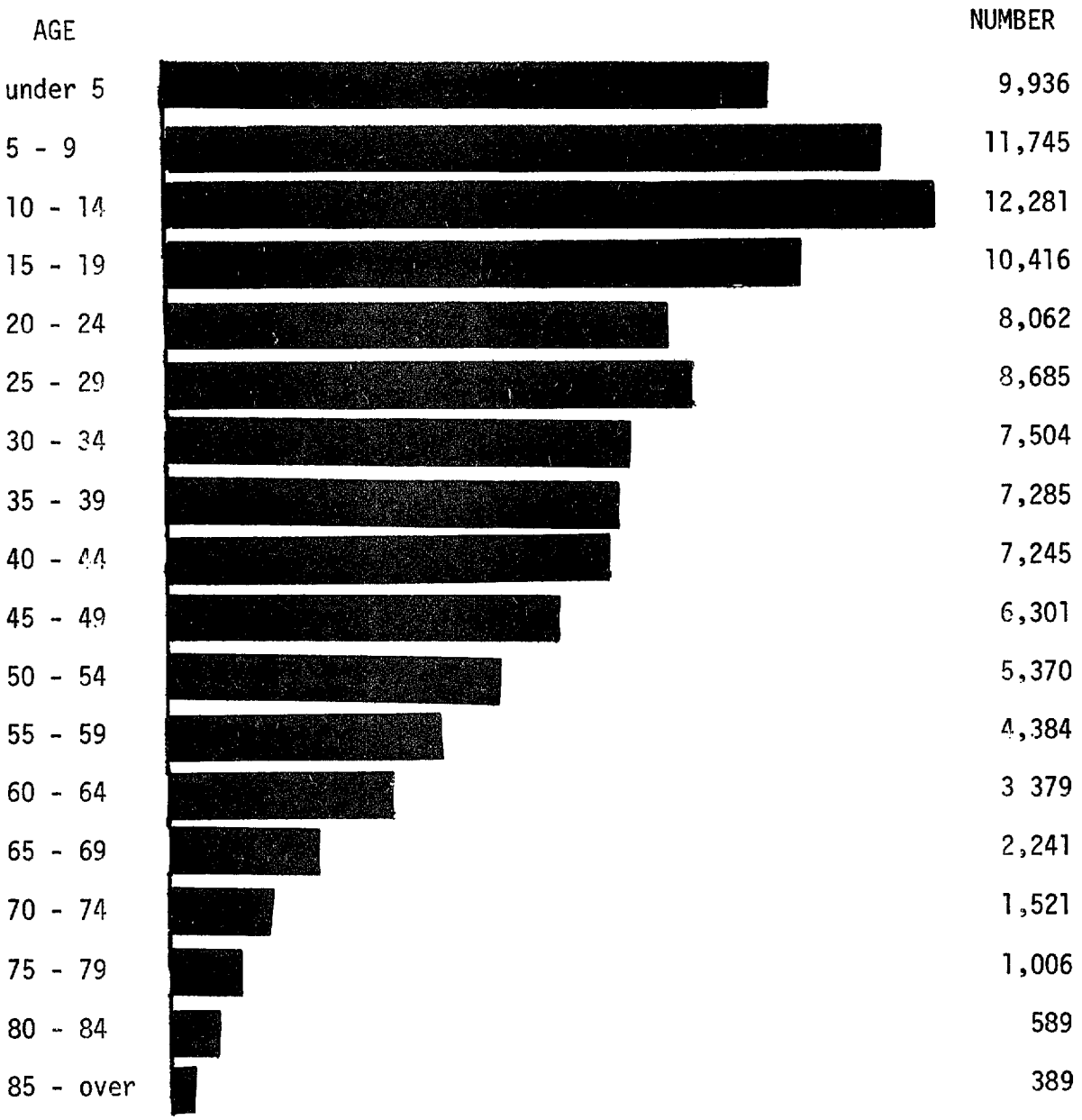

Under 18 40,909
65 and over 5 746

-Median Age - 26.1 years

Source: Brazosport Chamber of Commerce

According to the 1970 Census, the residents of the county tend to be well-educated with 31.2 percent having completed high school, and 6.5 percent completed four years of college. The median educational level of persons 25 years of age and over is 12.1 years as compared with 11.6 years for the state as a whole.

The median age of the county population is 26.1 years. The median age of the State of Texas population is 26.6 years. As shown in Figure 19, the population of age 65 and over is 5,749 (5.4 percent), as compared with 8.9 percent statewide. The small percentage of individuals over 65 years of age is probably related to the industrial development and high immigration rate of the area.

The Brazosport area is primarily industrial and is one of the fastest growing areas in the state. The 1970 Census reports that 33.9 percent of the county's population moved from outside the county since 1960. This growth rate means that many of the residents are relatively newcomers to the area. In general, Brazosport residents seem to be very pro-growth, an attitude which will be discussed further in Social Issues and Impacts.

Most of the people who work in Brazoria County reside there. A total of 1,285 Harris County residents commuted to work in Brazoria County in 1970 (U.S. Census data). Workers also commuted from other nearby counties including Galveston, Montgomery, and Fort Bend Counties.

The median 1970 family income in Brazoria County was $10,433, higher than both the Houston SMSA ($10,191) and the State of Texas ($8,486 median levels. Although the Houston SMSA and the Brazoria County median family incomes were slightly lower than the national average ($10,469), there was not necessarily a lower standard of living. The Houston SMSA had the lowest cost of living of all the SMSA's in the United States in 1970. The 1970 statistics list only 8.4 percent of all families in Brazoria County (2,267 people) as being below the national poverty level of $3,388 for all families.

The employment by occupation for the county is shown in Figure 20. The highest percentage of workers in the county are employed by the manufacturing industry. This is related to the presence of Dow Chemical and 86 other large manufacturing establishments, 30 percent of which employ more than 20 persons. The presence of these industries and the high construction and growth rate of the area result in relatively low employment figures. Texas Employment Commission

Figure 20

Brazoria County Employment by Occupation

Occupation	Number	Percentage
White Collar Workers	9,486	
Professional & Technical	6,441	15.1
Managers & Administrative	3,045	7.2
Industry	29,918	
Manufacturing	11,765	27.6
Wholesale & Retail Trade	6,707	15.8
Business, Repair & Personal Service	3,146	7.4
Educational Services	2,997	7.0
Construction	5,303	12.5
Non-Industry	3,147	
Farm Workers	848	2.0
Laborers	2,326	5.5

Source: U.S. Bureau of the Census. *1970 Census of the Population.*

(TEC) reports a 4.5 percent unemployment rate in the county as of April, 1977. TEC lists the average unemployment rate in the county in 1976 as 5.3 percent, as compared with the average state unemployment rate 5.7 percent in 1976.

There is a large commercial fishing industry in the area. A major shrimping fleet makes the area its seasonal home and produces as much as 15 million pounds of shrimp annually (*Brazosport,* 1976).

Another large industry in the area is tourism. There are 33 miles of ocean frontage in Brazoria County of which 22 miles is open to the public. Available recreational land in the county totals 27,235 acres. Two percent of the available recreational land is developed. The developed parks are associated with saltwater recreational areas. Figure 21 lists the various parks and their acreage.

Figure 21

Parks in Brazoria County

	Acres
Federal	
San Bernard National Wildlife Refuge	15,414
Brazoria National Wildlife Refuge	9,625
State	
Mud Island	1,075
Bryan Beach State Park	554
County	
Surfside Beach	304
Quintana-Bryan Beach	157
Brazoria Beach Park	5
Total Acres	27,134

Source: Texas Parks and Wildlife Department, 1975.

Brazoria County exceeds the Texas coastal counties' average for boat landings, slips and stalls, and fishing and skiing. Brazoria County has no campsites, picnic tables, or designated trails for hiking (Texas Outdoor Recreation Plan, Vol. 5, 1975).

In addition to salt water recreational opportunities, the area is the winter home of large populations of geese and ducks. These two species may be hunted during the open season.

The recreational opportunities available to the area's residents are supplemented by a number of cultural facilities. The Atlas of Texas (1973) lists two public museums in Brazoria County: the Brazosport Museum of Natural Science in Lake Jackson, and the Varner-Hogg Plantation House in West Columbia. The Brazosport Museum of Natural Science features many displays of shells, rocks, fossils, marine life and Texas wildlife. The Varner-Hogg Plantation house is located in the Varner-Hogg State Historic Park. This two-story columned mansion was the center of a sugar cane plantation in the periods before and after the Civil War.

The Brazoria County Library System consists of a main library in Angleton and eight branches in cites throughout the county. A bookmobile provides service to communities without a library. Over 180,000 volumes are available as well as recordings, magazines, newspapers, paperbacks, and filmstrips.

The Houston metropolitan area provides additional cultural features such as opera, symphony, and museums.

The historical sites in the project area are houses, plantation sites, and cemeteries. In Surfside is Allen House, an historical cottage; in Quintana are two vernacular Greek Revival cottages, as well as the site of Fort Velasco; in the Richmond area are the Brock House Ranch with a vernacular 19th century frame structure, and Phair Cemetery; near Lake Jackson are the plantation ruins of Lake Jackson Farms; in Clute is the site of Eagle Island Plantation; and in Jones Creek are the Gulf Prairie Cemetery and Peach Point Plantation (TPWD, 1976).

Archeological sites are more numerous. Not all of the likely archeological sites in the project area have been discovered and surveyed, as most sites are revealed only during excavation or construction operations. Most consist solely of shell midden. Shell middens occur at Cone Island in the Oyster Creek-Chubb Lake area, at and around Lake Jackson, and near Jones Lake at the GIWW. Of special interest are firepits, possible burials, Neo-Indian campsites, and Anthropomorphic pumic heads and camel teeth found near Lake Jackson. To the east of Clemens State Farm, south of Highway 36, is an historic Anglo-American site in two structural concentrations with several cisterns (Texas Archeological Research Laboratory, open file information, 1976).

Description of the Study Area Environment References

Allen P. F. 1950. "Ecological Basis for Land Use Planning in Gulf Coast Marshlands." *Journal Soil and Water Conservation,* Vol. 5, pp. 57-62.

Bernard, H.A. and R. J. LeBlanc. 1965. 'Resume of the Quaternary Geology of the Northwestern Gulf of Mexico Province.' H. E. Wright, Jr. and D. G. Frey (eds.) *The Quaternary of the United States.* Princeton University Press.

Bernard, H. A. et al. 1970. *Recent Sediments of Southeast Texas, A Field Guide to the Brazos Alluvial and Deltaic Plains and the Galveston Barrier Island Complex.* University of Texas, Austin, Bureau of Economic Geology. Guidebook 11.

Brazosport Chamber of Commerce. 1976. *Brazosport.* Chamber of Commerce Brochure.

Brown, Jr., L. F. et al. 1974. *Natural Hazards of the Texas Coastal Zone.* University of Texas, Austin, Bureau of Economic Geology, 13 pp., 7 maps.

Bruce, C. H. 1973. "Pressured Shale and Related Sediment Deformation: A Mechanism for Development of Regional Contemporaneous Faults." *Amer. Assoc. Petroleum Geologists Bull.* v. 57(5) pp. 878-886.

Dutz, J. (TPWD) March 15, 1977, personal communication to A. Dutton (RPC).

Ewing, M., D. B. Ericson, and B. C. Heezen. 1958. "Sediments and Topography of the Gulf of Mexico." Weeks, L. G. (ed.) *Habitat of Oil.* Amer. Assoc. Petroleum Geologists pp. 995-1053.

38 Fed. Reg. 50439. 1973

39 Fed. Reg. 31001. 1974

Garner, H. (Wildlife Manager) March 30, 1977, personal communication to A. Reed (RPC).

Greenman, N. N. and R. J. LeBlanc. 1956. "Recent Marine Sediments and Environments of Northwest Gulf of Mexico." *Amer. Assoc. Petroleum Geologists Bulletin,* V. 40, pp. 813-847.

Houston-Galveston Area Council, 1976. 1975 Census Tract Land Use, Brazoria County, Texas. Unpublished data.

Kreitler, C. W. 1976a. *Faulting and Land Subsidence from Groundwater and Hydrocarbon Production,* Houston-Galveston, Texas. Proc. Second International Symposium on Land Subsidence, December, 1976. Anaheim, California.

Kreitler, C. W. 1976b. *Lineations and Faults in the Texas Coastal Zone.* Univ. Texas, Austin, Bur. Econ. Geology. RI No. 85. 32 pp.

Louisiana. Department of Conservation. 1972. *Groundwater Conditions in Southwestern Louisiana, 1961 and 1962.* Department of Conservation, Geological Survey, and Department of Public Works. Water Resources Pamphlet No. 12. Baton Rouge, Louisiana.

McGown, J. H. et al. 1976. *Environmental Geologic Atlas of the Texas Coastal Zone—Bay City-Freeport Area.* University of Texas, Austin, Bureau of Economic Geology. 98 pp. 9 maps.

Murray, G. E. 1961. *Geology of the Atlantic and Gulf Coastal Province of North America.* Harper and Bros., New York. 692 pp.

Reid, W. M. 1973. *Active Faults in Houston, Texas.* University of Texas, Austin, Ph.D. dissertation, 122 p.

Rice Center for Community Design and Research. 1976. *Texas Gulf Coast Program Research Report 1.* 3 vols. Rice Center for Community Design and Research. Houston.

Sandeen, W. M. and J. B. Wesselman. 1973. *Groundwater Resources of Brazoria County, Texas.* Texas Water Development Board. Report No. 163. 199 pp.

Seadock, Inc. 1974. *Environmental Report*—Texas Offshore Crude Oil Unloading Facility. 3 vols.

Shelton, J. W. 1968. *Role of Contemporaneous Faulting During Basinal Subsidence.* Amer. Assoc. Petroleum Geologists Bull., v. 52(3) pp. 399-413.

Texas Air Control Board. 1971. Self-Reporting Industrial Air Emissions by County. TACB Computer file.

Texas Air Control Board. 1974. *Ambient Air Quality Survey—Clute and Freeport, Texas.* October 15, 1973 through April 3, 1974.

Texas Air Control Board. 1976. Air Surveillance Report, Clute (Station 11), Commerce Sheet at Cobb Field.

Texas Archeological Research Laboratory, 1976. Brazoria County Archeological Site Information. Balcones Research Center, Austin, Texas.

Texas A&M University. 1973. *Waste Management in the Texas Coastal Zone.* Office of the Governor, Div. Planning Coordination, Coastal Resources Management Program, ICNRE, Austin, Texas.

Texas Highway Department. 1973. Brazoria County, Texas—Traffic Map. Austin, Texas.

Texas Municipal League. 1976. *Texas Municipal Taxation and Debt.* 1975-1976. Austin: Texas Municipal League.

Texas Parks and Wildlife Department, Comprehensive Planning Branch, 1975. *Regional Environmental Analysis of the Houston-Galveston Region, Outdoor Recreation Plan.* Austin, Texas 236 pp.

Texas Parks and Wildlife Department. 1974. *Outdoor Recreation Plan.* Vol. 5. Austin: Texas Parks and Wildlife Department.

U.S. Bureau of the Census. 1970. *Census of the Population,* 1970. U.S. Department of Commerce. Washington, D.C.: GPO.

U.S. Department of Argiculture. Soil Conservation Service. 1972 (among others). Established Soil Series Descriptions. Fort Worth, Texas.

U.S. Department of Commerce, National Oceanic and Atmospheric Administration, 1973. *Annual Wind Distribution by Pasquill Stability Classes, Galveston, Texas.* Environmental Data Service, National Weather Records Center. Asheville, North Carolina.

University of Texas at Austin, Bureau of Business Research. 1976. *Atlas of Texas.*

University of Texas. 1973. *Population Projections for Texas Counties: 1980-2020.* Austin, Texas: Population Research Center.

Williamson, J. D. M. 1959. "Gulf Coast Cenozoic History." *Trans. Gulf Coast Assoc. of Geological Societies.* Vol. 9, pp. 15-29.

INDUSTRIAL LOCATION ANALYSIS

Because land and waterfrontage requirements vary among industries, the types of industries locating within the development will influence the site's ultimate size, design and layout. The purpose of this chapter is the postulation of particular industries which would most likely locate along an inland canal and the identification of their requirements.

The industries are chosen by considering traditional factors in industrial location decisions, by examining historical waterborne commodity flows within the study area, and by comparing the general requirements of those industries utilizing water transportation with the availability of these factors in Brazoria County. Finally, specific requirements of the selected industries are discussed. These steps parallel the steps which an industry would take in evaluating the suitability of an area for a particular project, with modifications as per the study orientation of describing the case study hypothesis.

The results of this analysis indicate that a refinery and petrochemical plant industrial complex can reasonably be expected to locate at the site given past waterway development patterns, industrial requirements, and trends in the industrial development of the study area. This industrial complex should be considered as the core of the site development, and not exclusive of other industries which might locate along the inland canal. A brief summary of the types of associated industries, such as the metal products sectors and their requirements is included at the end of this section.

Industry Location Factors

Location theory provides a framework within which the process of location decision-making and subsequent industrial development can be described and analyzed. The theory is well developed and its evolution is summarized in Appendix A.

The location decision for most firms, especially in the manufacturing sector, is a long-term capital investment decision. Consequently, the process of choosing a site, outlined in Figure 22, considers many factors relevant to minimizing location risks. These factors include:

1. Transportation costs
2. Proximity to resource and/or product markets
3. Availability and quality of utilities (electricity, fuels, water)
4. Quantity and quality of labor
5. Availability and cost of land
6. Existence of legal/institutional incentives or barriers

These factors affect a firm's profitability through their influence on revenues and costs.

Transportation

A firm is concerned with the costs of transporting both its raw materials and its products. Thus, industry evaluates a potential location in terms of assembling the required inputs and distributing the final output. These costs are determined by several considerations: the bulk, weight, and value of the cargo, the need for special handling or service, the distance involved, and the prevailing freight rate (Hunker, 1974).

Each transportation mode varies as to its cost, capacity, flexibility, and speed. Figure 23 summarizes the competitive advantages associated with the modes. To a considerable degree, the nature of the cargo will determine the types of transport used. For example, marine transport is

Figure 22

The Site Selection Process

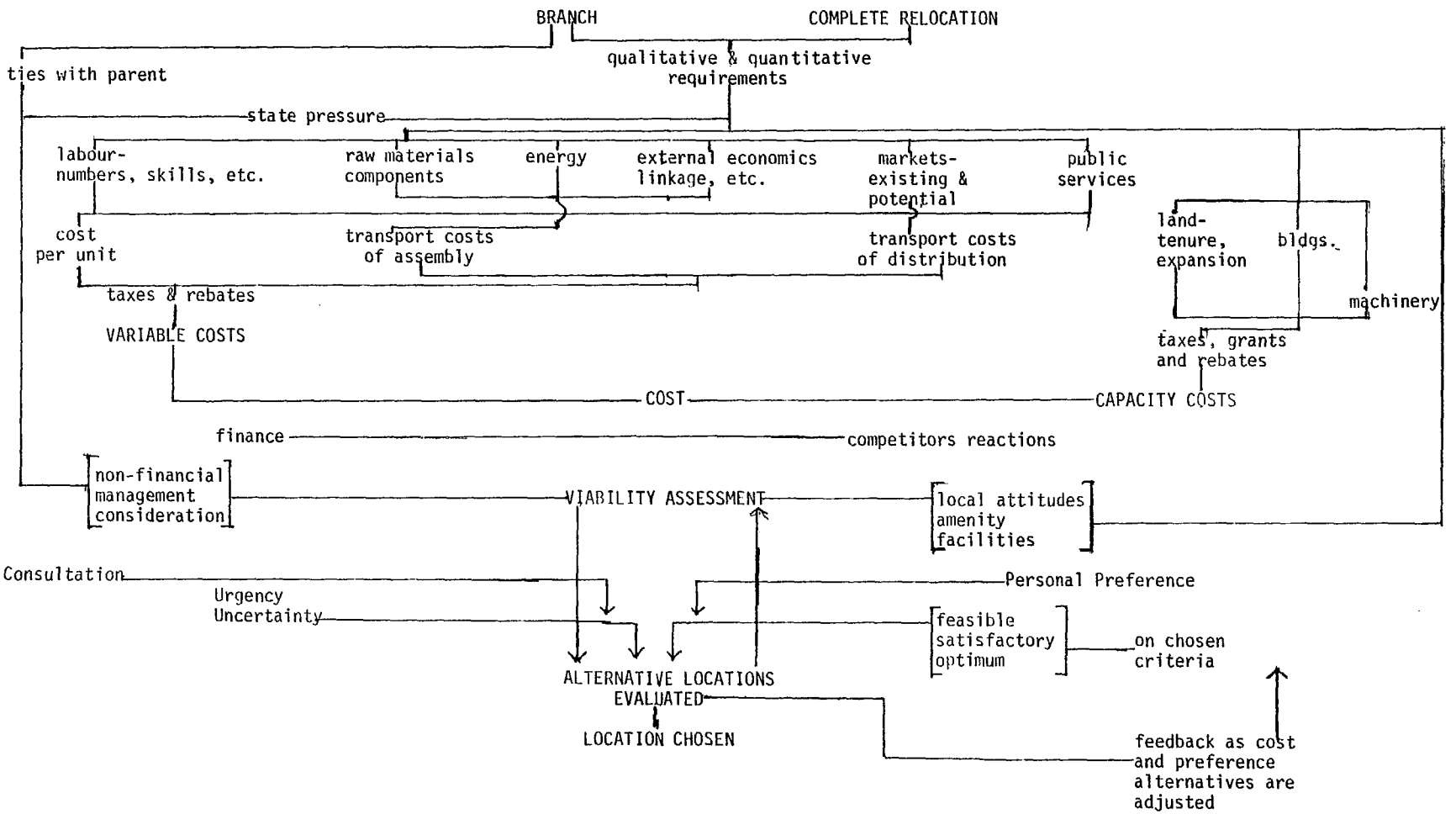

SOURCE: P.M. Townroe, Industrial Location Decisions, Center for Urban and Regional Studies, The University of Birmingham (London: Research Publications Services, Ltds., 1971) p. 25

Figure 23

Competitive Advantage Ranks of Transportation Modes

Cost	Capacity	Flexibility	Speed
1. Pipeline	1. Pipeline	1. Motor Carrier	1. Airline
2. Marine	2. Marine	2. Rail	2. Motor Carrier
3. Rail	3. Rail	3. Marine	3. Rail
4. Motor Carrier	4. Motor Carrier	4. Pipeline	4. Marine
5. Airline	5. Airline	5. Airline	5. Pipeline

Source: Kearney, A. T., Inc. 1974. *Domestic Waterborne Shipping Market Analysis*, prepared for the Maritime Administration, U.S. Dept. of Commerce.

generally preferred for bulky, nonperishable cargo of low value since the transportation costs represent a significant portion of total costs. In contrast, light weight, high value cargo is often moved by air.

Markets

Many studies of industrial location determinants reveal that proximity or access to product or raw material markets is a prime consideration in the location decision. In general, the location of firms depends upon the transportation costs associated with both the raw materials and the industry's products. Firms tend to locate near the market of goods which have high transportation costs. For example, firms using materials which gain weight in manufacturing tend to locate close to their product market because the transportation costs of the finished product will be greater than that of the raw materials. Alternately, when the processing of the raw material into a final product results in a significant weight loss, production will tend to occur at or near the raw material source.

Those firms locating near the product market are market-oriented; those locating near raw material sources are resource-oriented (Kinnard and Messner, 1971).

Market-oriented firms can be further classified according to the type of customer. Those which sell to final consumers will be located near population centers, and changes in industry location are closely associated with population growth and shifts. Those which sell to other firms locate near their customers; demand for their product is dependent upon the demand for the customer's product.

Resource-oriented indutries are primarily concerned with either the availability of a specific input or the cost of transporting that input. For instance, firms in the pulpwood industry tend to locate near timber sources.

Utilities

While electricity, fuels, and water are essential to the continuing operation of a manufacturing plant, their availability has only recently become an important factor in the location decision.

In the future, the location patterns of energy-intensive industries are expected to change due to 1) lack of necessary and traditional energy resources in a given region; 2) the need to relocate in order to obtain a lower-cost energy source; and 3) the need to change production processes to adjust to changing energy supplies (Hunker, 1974).

As energy supplies diminish and costs rise, regions with relatively secure energy supplies will become particularly attractive to those firms whose production processes require an unsubstitutable energy. In addition, the quality of fuels may be critical as industries comply with environmental regulations restricting levels of permissible pollution.

The availability of water in sufficient quantity and quality is also gaining importance as a location factor. For example, McGregor (1970) found in his study of the role of water in industrial location that:

> Concern over adequate supplies of fresh water, . . ., has spread in recent decades to many other parts of the United States. It will become more intense and spread still more rapidly as population—especially urban population—and industrial activity continue to grow.

Water of varying quality is often required in a production process. If water of varying qualities is not available to the industry, the water of the highest quality required will guide the industry location. Water of the same quality can then be used in other stages of the production process.

In summary, the availability and quality of energy and water are becoming more important in the location decision, especially for firms employing production processes which are energy- or water-intensive, or which require a particular energy or water of specific quality.

Labor

Both the quantity and quality of labor can be significant factors in a firm's location decision. Characteristics of the local or regional labor force which may be considered include:

1. Availability of job type within the region
2. Labor costs
3. Strength and activity of unions
4. Quality of labor
5. Experience and skills

An example of the sensitivity of the industry is found in the shift of the U.S. textile industry from the Northeast to the South, attributed at least in part to the existence of a low-cost, nonunionized labor pool in the latter region.

Although labor is an important location factor, the lack of labor force with required skills in an area may not necessarily be a constraint. Rather, because labor is more mobile than other factors of production, firms may select a site knowing that labor will be attracted by the new job opportunities. This has been the experience, for instance, in the construction of the Alaskan Pipeline, and of the coal mining industry in Montana. In addition, local unskilled labor may be trained by the industry.

Land

The amount of land needed for an industrial site depends upon the production process employed and thus varies widely among industries and firms. In general, though, a modern industrial site will require sufficient area for the following functions:

1. Processing or production
2. Storage of materials
3. Storage of finished goods
4. Offices and salesrooms
5. Wash rooms, locker rooms, lunch rooms
6. Heating and ventilating equipment
7. Repair or tool shops
8. Parking for employees
9. Parking for visitors
10. Loading and unloading

In addition, land is often provided for landscaping, employee recreation areas, garages or parking for fleet trucks, and internal streets and walks in larger plants.

Within the past 25 years, the industrial land use trend in the U.S. has been toward a less intensive use of land as plants occupy larger sites. Reasons for this trend include: 1) land is less expensive as plants locate away from urban areas; 2) reserve land is purchased for future expansion; 3) larger portions of the land area are reserved for buffer between the plant and surrounding land uses. There have been cases, for example, of occupants of neighboring residential areas ultimately forcing closure of a plant due to noise, odors or other objectionable aspects of its production process, even though the plant may have preceded the residential development.

Institutional Factors

Inducements or disincentives offered by governments can directly affect the location decision of a firm. State and local governments in particular have traditionally attempted to attract new firms or encourage the expansion of existing industry. Inducements provided by states include financial assistance, tax relief, research and development support, and employee training programs. Among the incentives offered by local governments are subsidies and tax concessions.

Indeed, tax relief is a major tool used to attract new industry. The manner in which taxation and differences in tax structure influence a firm's location decision is discussed in Figure 24. If costs of alternative sites are equal, the firm will choose a site in that area offering the most favorable tax structure.

Very rarely, however, are all costs of alternative sites equal. Any concession offered by one locality or state can also be offered by other areas. The difference in local base tax rates may, in fact, weigh more heavily on a firm's location decision. As a result, the importance of these inducements may be relatively minor, coming into play only when the final site is selected. This is especially so in Texas, where no direct incentives are allowed.

In the past, the federal government has also influenced industry location, particularly by encouraging industry to locate in economically depressed regions. This has been effectuated through such legislation as the Appalachian Regional Development Act.

Government action can serve to discourage as well as encourage location in an area. Federal and state environmental regulations have, in some cases, restricted sites available for industrial development as have local governments through zoning restrictions.

In summary, while no one factor determines the outcome of a location decision, a particular factor may dominate or be more important to the firm than others. In the context of this study, the primary focus is on industries which are transportation-oriented. Specifically, the concern is with industries which place critical importance on the availability of water transportation facilities and are thereby inclined to locate along an inland canal. While this may not be the firm's sole consideration in choosing a site, it is assumed to be the primary one of the industries selected in this study.

Selection of Industries

Although the actual site selection for a plant is made on the basis of numerous considerations, for the purpose of this study, dependence on water transportation is assumed to be the primary location factor for those industries which would utilize a site along an inland canal. Representative industries which might reasonably locate in the study site are chosen by considering 1) the importance of water transportation to various industrial sectors; 2) the other requirements of those industries identified as using water transportation; 3) the capability of the study area to meet these needs.

Figure 24

Tax Comparisons as the Basis for the Location Decision

REGIONAL CHOICE BETWEEN STATES

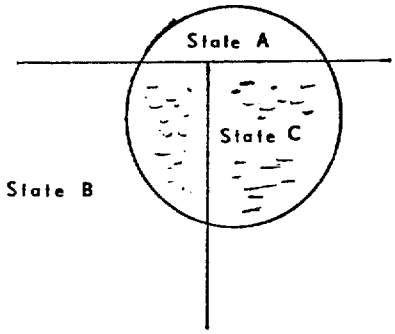

State taxes differ between the three states. Any site within the circle is acceptable, i.e., all other costs are equal. The state with the lowest tax rate should attract the enterprise.

REGIONAL CHOICE WITHIN ONE STATE

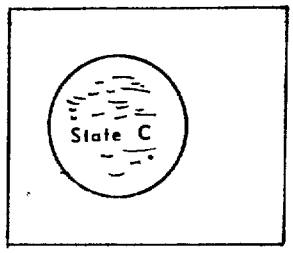

Any site within the circle is acceptable. The circle falls within one state. Comparison of taxes with other states would be meaningless. The enterprise will seek the community within the circle with the most favorable tax structure.

CHOICE BETWEEN COMMUNITIES AT STATE LEVEL

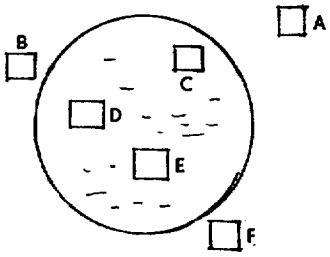

All sites shown are within one state. Alternative locations exist, but only those within the circle meet the "all other costs being equal" measure. Communities C, D, and E can compete; the others do not meet this test. Of the three within the circle, the enterprise will locate at the one providing the most favorable tax structure.

CHOICE BETWEEN PARTS OF A METROPOLITAN AREA

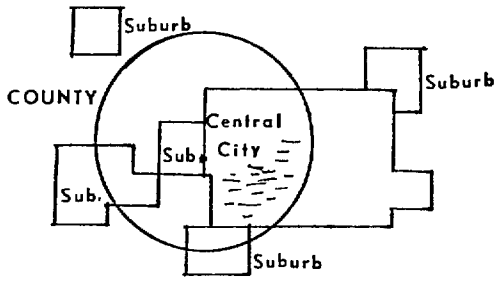

Within a metropolitan area, parts of the central city, suburbs, and county lie within the circle. The choice of location will reflect the most favorable tax structure.

Source: Henry L. Hunker, *Industrial Development* (Lexington, Mass.: Lexington Books, 1974).

Industries Utilizing Water Transportation

An analysis of studies of location determinants and waterborne commodity flows along the Texas coast suggests that the petrochemical and refining industries are two sectors which rely heavily on water transportation.

One of the most comprehensive surveys of the factors which are considered by firms in location decisions was undertaken by the U.S. Department of Commerce, Economic Development Administration (EDA) in 1970. Water transportation access was of greatest importance in final site selection for two sectors:

SIC 28 – Chemicals and Allied Products
SIC 29 – Petroleum Refining

The importance attached to water transportation access by firms in these industries is shown in Figure 25.

Figure 25

Importance Attached to Having A Plant Site With Water Transportation Facilities[1]

	Percent In Industry	
Value Attached	SIC 28[2] Chemical and Allied Products	SIC 29[3] Petroleum Refining
Critical	23%	33%
Significant to Average	52%	67%
Minimal	21%	0
No Response	4%	0
Number of Firms	56	6

1. The survey used the SIC classification system in effect before 1972. Totals may not add to 100 percent due to rounding.
2. Consists of the following 3-digit SIC codes: 281 (Industrial Inorganic and Organic Chemicals), 282 (Plastic Materials), and 287 (Agricultural Chemicals).
3. SIC 2911, Petroleum Refining.

Source: U.S. Department of Commerce, Economic Development Agency, *Industrial Location Determinants, 1971-1975,* Section 1 (Washington, D.C.: Department of Commerce, February, 1973).

The existence of adequate transportation facilities seems to be particularly crucial to the chemical industry. Of the firms in that industry, 45 percent selected improvements in transportation efficiency as a location objective in the EDA survey. Figure 26 summarizes the objectives cited by firms in both the chemical and refining industry.

In a study which analyzed why firms locate along the Texas Gulf coast, Wright and Matthews (1971) also found that adequate transportation facilities were of major importance in the location decision of the petrochemical industry. The most important location factors were ranked by the industry as follows:

1. Near raw materials
2. Good transportation
3. Skilled labor supply
4. Land availability
5. Water supply

Figure 26

Locational Objectives To Be Achieved As A Percentage of Survey Respondents[1]

Objective	SIC 28[2] Chemicals And Allied Products	SIC 29[3] Petroleum Refining
(1) Improvement in transportation efficiency or economy	45	–
(2) Availability of larger parcel of land	11	33
(3) Closer proximity to resources and/or major suppliers	46	67
(4) Closer proximity to other plants of your company	7	–
(5) Closer proximity to your distributors and/or your customers	70	67
(6) Closer proximity to other firms in same or related industries	7	–
(7) Ability to serve new and/or expanded markets	57	67
(8) Minimize competition from other plants for labor force	7	–
(9) To secure factors of location unique to your industry (special energy requirements, etc.)	38	67
Number of Respondents	56	6

1. Respondents could select as many as three objectives. The survey used SIC classifications in effect before 1972.
2. Consists of SIC codes 281, 282, and 287.
3. SIC 2911.

Source: U.S. Department of Commerce, Economic Development Agency, *Industrial Location Determinants,* Section 1 (Washington, D.C.: Dept. of Commerce, February, 1973).

The reliance of the chemical and refining industries on water transportation is confirmed when one considers the modes of transportation used by the industries to ship their products. This information is provided in Figure 27 for Texas as a whole, and for the Beaumont-Port Arthur-Orange, Galveston-Texas City, and Houston SMSA's. The study area is a part of the Houston SMSA. Examination of this data reveals that 43 percent of the chemicals and allied products (most of which were petrochemicals) and 93 percent of the petroleum refining products shipped from the coastal production area to other points in the U.S. were conveyed by water.

Figure 27

Percentage of Products Shipped By Water, 1972[1]

SIC	Industry	From Texas Million Tons	From Texas Percent by Water	From Coastal Area[2] Million Tons	From Coastal Area[2] Percent by Water
28	Chemicals and Allied Products	38.9	31.7	25.7	43.2
281	Industrial Inorganic and Organic Chemicals	20.6	25.4	12.2	34.3
285	Paints, Enamels, Etc.	0.9	31.6	0.5	37.0
291	Products of Petroleum Refining	119.6	89.3	91.5	93.2

1. Commodities shipped to all regions of the U.S.
2. Coastal area consists of these Texas counties: Brazoria, Fort Bend, Harris, Liberty, Montgomery, Jefferson, Orange, Galveston.

Source: U.S. Bureau of Census, Census of Transportation, 1972, *Commodity Transportation Survey—Area Series: Area Report 6,* TC72C2-6 (Washington, D.C.: GPO, 1975).

Major components of the traffic along the Texas portion of the Gulf Intracoastal Waterway (GIWW) are crude petroleum, petroleum products, and chemicals, as shown by Figure 28. Since the GIWW is a barge canal, its commodity flow patterns are indicative of the chemical and petroleum refining industries as major candidates for an inland canal site.

Figure 28
Major Users of the Gulf
Intracoastal Waterway in Texas

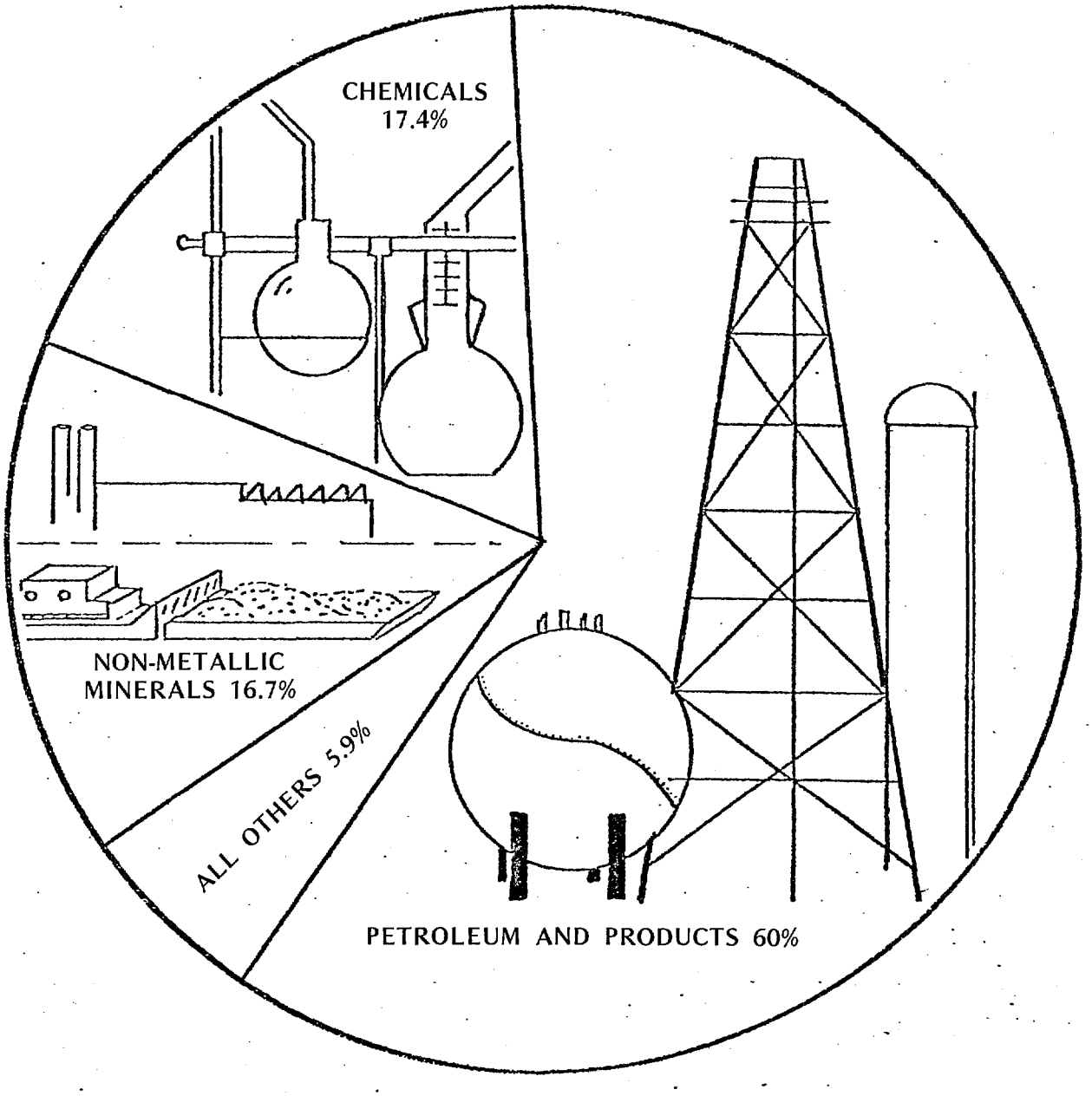

Source: *Analysis of the Role of the Gulf Intracoastal Waterway in Texas,* Texas A&M University, December, 1974, p. 160.

In summary, chemical and petroleum refining are two industries which can reasonably be expected to locate along a barge canal, because they use water transportation in general, and barge transportation in particular. The importance of water transportation to the industries is evidenced by results of studies of location factors and is further supported by analysis of transportation modes utilized by the sectors and commodity flow patterns along the GIWW.

Other Location Factors

Although utilization of barge transportation is considered to be the primary criterion for selection of industries for the study site, other factors such as proximity to markets, and availability of utilities, land and labor are considered in a firm's location decision. The importance of these factors to the petrochemical and refining industries and the capability of the study area to meet these needs are now discussed.

Proximity to Markets. The results of the EDA survey of location determinants, summarized in Figure 26, reveal the importance of market factors in the location decision of the chemical and refining industries. Close proximity to customers was the location objective most frequently cited, followed by other market-oriented objectives such as closer proximity to resources and the ability to serve new or expanded markets.

Proximity to raw materials is especially important to the chemical industry, and in particular, to that segment which produces petrochemicals. Very broadly defined, petrochemicals are those products derived from petroleum and natural gas. They generally are considered to consist of three components: basic petrochemicals (those made directly from petroleum and natural gas fractions), intermediates (those for which a definite chemical precursor can be identified and which will undergo further chemical reactions), and end products (such as fibers, plastic resins, and rubber). The last does not include fabricated products such as plastic articles and tires.

Proximity to raw materials, including feedstocks, is especially important for the makers of basic and intermediate petrochemicals. In one study of petrochemicals plants in Texas, for example, 47 out of 60 firms ranked "nearness to raw materials" as the primary site selection factor (Whitehorn, 1973).

The major petrochemical feedstocks are natural gas; liquified petroleum gases (LPG) such as ethane, propane, and butane, and heavy liquids such as naphtha and gas oil. The LPG's are produced in refineries or extracted at gas processing plants; the heavy liquids are refinery products.

Since Texas is the nation's largest producer of natural gas and crude petroleum, it is not surprising that 22 percent of the nation's refining capacity and 17 percent by number of the nation's petrochemical plants are located in coastal counties (*International Petroleum Encyclopedia,* 1976). Figure 29 compares Texas' capacities for production of major basic chemicals with total U.S. capacities and reveals that, with the exception of ammonia, at least 40 percent of production capacity for each product is in Texas. Refineries and petrochemical plants on the Texas Coast are listed in Appendix B.

In addition to the feedstocks listed above, raw materials for the petrochemical industry also include the products of other petrochemical firms. Complementary linkages among petrochemical firms give rise to substantial transfer economies or economies of agglomeration, resulting in cost reductions to the firms. A firm locating in the study area would thus benefit not only from the concentration of the petrochemical industry along the Texas Gulf coast, but also from a close association with industries in an industrial complex.

In short, selection of an inland canal site in the study area would satisfy the need of the petrochemical and refining industries to be near input and output markets. In addition, such a site would provide maximum transportation flexibility, as feedstocks and products could move by pipeline, rail, or truck in addition to barge.

Figure 29

Basic Chemical Capacity, 1975
MM Lbs/Yr.

Product	Texas Capacity	Continental U.S. Capacity	Texas as a Percentage of U.S.
Ethylene	15,310	24,895	61%
Propylene	6,235	13,510	46%
Butadiene	3,295	3,965	83%
Acetic Acid	1,140	1,140	100%
Butyl Rubber	180	385	47%
Polybutene	280	460	61%
Butyl Alcohol	192	459	42%
Benzene	3,859	7,674	50%
Toluene	5,009	7,180	70%
Xylenes	3,123	4,191	75%
Carbon Black	1,865	4,223	44%
Ammonia	6,867	37,566	18%
Methanol	5,350	8,354	64%
TOTAL	52,705	114,002	46%

Source: *Texas/Louisiana Petrochemicals*, prepared for the Petrochemical Energy Group (Houston: Groppe and Long, June, 1975).

Figure 30

Energy Used by U.S. Petrochemical and Petroleum Refining Industries for Heat and Power, 1974[1]

Energy	All Industries	Petrochemical[2] Quantity	Petrochemical[2] Percent of All Industries	Petroleum Refining Quantity	Petroleum Refining Percent of All Industries
Purchased Fuels (BKWh Equivalent)	3,307.6	491.4	14.9	409.2	12.4
Fuel Oil (MMB)	285.1	12.9	4.5	D	D
Coal (MM Short Tons)	47.8	6.9[3]	14.4[3]	0.3	0.6
Coke (MM Short Tons)	14.7	0.0	—	D	D
Natural Gas (TCF)	6.3	1.1[3]	17.5[3]	1.1	17.5
Electric Power (BKWh)	696.2	54.8	7.9	D	D
Purchased	616.8	43.4	7.1	25.8	4.2
Generated Less Sold	79.4	11.4	14.4	D	D
Total Purchased Energy Consumption (BKWh Equivalent)	3,924.4	534.8	13.6	435.0	11.1
Total Energy Consumption (BKWh Equivalent)	4,003.8	546.2	13.6	D	D

1. D = not revealed because of disclosure regulations.
2. Petrochemical industry is defined as comprising these 4-digit SIC groupings: 2821, 2822, 2824, 2865, 2869, 2873, 2895.
3. Represents a minimum value, since data for one or two sectors were not revealed because of disclosure regulations.

Source: U.S. Bureau of the Census, Annual Survey of Manufactures, 1974, *Fuels and Electric Energy Consumed*, Series M74 (AS)-4.2 (Washington, D.C. Department of Commerce, 1976).

Energy. Both the petrochemical and refining industries are extensive energy users, accounting for about a quarter of total usage for heat and power of purchased energy by U.S. industry in 1974. As shown in Figure 30, fuel oil, natural gas, and electricity are the major energy forms utilized.

Nationwide, the petrochemical industry purchased about 80 percent of the electricity it consumed (the other 20 percent being generated by the industry). Because of disclosure regulations, the percentage of electricity purchased by the refining industry cannot be discerned from Figure 30. However, it also has been estimated at 80 percent (Nelson, 1976a).

Of the fuels and feedstocks required by the industry, natural gas supplies are becoming increasingly critical nationwide. Because most natural gas in Texas is sold on the intrastate market, however, this fuel is generally available in the state, although at higher prices than gas sold on the interstate market.

Industry sources reveal that sufficient electric power should be available to meet the needs of a refinery-petrochemical complex. This will be especially true when the South Texas Nuclear Plant becomes operational in 1980.

Water. The chemical and refining industries are heavy users of water, accounting for about 72 percent of the total industrial water intake in Texas in 1973 (see Figure 31). Although the water intake of these industries is substantial, the water composition must also be considered. The chemical industry's water intake in 1973 was 17 percent fresh, 12 percent brackish, and 71 percent salt water. The proportions of the water intake consumed (as opposed to throughput) by the two industries were about 5 to 17 percent, respectively.

The various uses of water by the industries are shown in Figure 32. The major use in Texas and in the U.S. by the petrochemical and refining industries is for cooling and condensing.

Figure 31

Water Consumption by Industry in Texas, 1973

(Billion Gallons)[1]

	All Texas Industries	SIC 28[2] Chemicals and Allied Products	SIC 29[2] Petroleum Refining
Gross Water Used[3]	12,004.9	3,270.4	6,673.1
Total Water Intake	1,669.8	930.1	272.6
Fresh Water	478.7	161.7	D
Brackish Water	282.3	112.2	157.8
Salt Water	908.8	656.2	D
Water Intake Discharged	1,554.4	879.3	225.6
Water Intake Consumed	115.4	50.8	47.0

1. Data are for firms reporting consumption of 20 million gallons or more.
   D = not reported because of disclosure regulations.
2. Data are given for 2-digit SIC codes in this figure because much of the information by 4-digit SIC codes is not available due to disclosure restrictions.
3. Represents the estimated quantity of water that would have been required if no water not been recirculated or reused. Thus it is higher than total water intake.

Source: U.S. Bureau of the Census, 1972 Census of Manufactures, *Special Report Series: Water Use in Manufacturing,* MC 72(SR-4) (Washington, D.C.: GPO, 1975).

Figure 32

Water Intake by Purpose and Kind, United States and Texas, 1973

(Billion Gallons)

	All Industries			SIC 28[2] Chemicals and Allied Products			SIC 29[2] Petroleum Refining		
	Fresh	Brackish	Salt	Fresh	Brackish	Salt	Fresh	Brackish	Salt
Texas									
Process	152.7	17.7	D	36.9	D	0.1	D	D	D
Cooling and Condensing	233.5	219.2[3]	309.9[3]	80.9[3]	88.9[3]	D	D	129.3[3]	D
Sanitary Service	10.7	D	0	4.1	0	0	D	D	0
Boiler Feed and Other	81.7	3.4	1.2	31.9	0	D	D	D	D
Total	478.7	282.3	908.8	161.7	112.2	656.2	D	157.8	D
United States									
Process	3,772.4	68.7	109.5	365.7	25.8	D	45.7	D	D
Cooling and Condensing	7,602.4	1,308.3	1,313.8	2,382.9	444.6	746.1	427.3[3]	D	178.3[3]
Sanitary Service	206.6	1.0	0.1	27.1	0	0	D	D	0
Boiler Feed and Other	610.0	17.5	10.3	150.7	0.9	D	116.1	D	D
Total	12,194.9	1,395.6	1,433.8	2,926.6	471.3	778.4	639.3	462.7	180.6

1. D = not reported because of disclosure regulations. Totals do not add because of incomplete reporting.
2. Data given for 2-digit SIC codes in this figure because much of the information by 4-digit SIC codes is not available due to disclosure restrictions.
3. Part of the data is not reported because of disclosure regulations. Thus, this figure represents minimum water usage.

Source: U.S. Bureau of the Census, 1972 Census of Manufactures, *Special Report Series: Water Use in Manufacturing*, MC 72 (SR-4) (Washington, D.C.: GPO,1975).

The primary available surface water source in Brazoria County would be the Brazos River. The Brazos River has one of the largest drainage basins in the state with one of the highest flow rates, averaging one million acre-feet in the spring and 210,000 acre-feet in the summer. Of all the river basins in the area, this one has the highest water availability. Three reservoirs totalling 50.4 thousand acre-feet capacity are located in the county. Dow Chemical Company operates William Harris and Brazoria Reservoirs which are off-channel diversions from the Brazos River. Within 100 miles of the study area are four existing major reservoirs, having a combined dependable yield of 190,000 acre-feet per year and an unsold yield of 18,000 acre-feet per year. A proposed reservoir on the Navasota River would provide 120,000 unsold acre-feet per year and a 105,000 acre-feet dependable yield per year.

The Gulf Coastal Aquifer is the major groundwater source in the Texas coastal region. Yearly groundwater deficits, as averaged recharge minus withdrawal over large areas, are 60,000 acre-feet in the Brazos-Colorado River Basin, and 50,000 acre-feet in the San Jacinto-Brazos River Basin. The coastal segment of the Brazos River Basin has a current groundwater surplus of about 30,000 acre-feet per year (Rice Center for Community Design and Research, 1976).

Groundwater resources within Brazoria County are fully developed towards the coast. Farther inland groundwater resources may still be developed. Two aquifers comprise the Gulf Coastal Aquifer in the study area, the Evangeline aquifer and lower and upper units of the Chicot aquifer. The Evangeline aquifer may supply fresh water to large capacity wells at 1,000 gpm (gallons per minute). The lower Chicot is capable of yielding 1,000 to 3,000 gpm fresh water, 10's gpm slightly saline water, and 3,000 gpm saline water, depending upon the exact area. Where sand thickness in the upper Chicot exceeds 100 feet, along the Brazos River and between Freeport and Manvel, wells may yield freshwater at 1,000 to 3,000 gpm (Sandeen and Wessleman, 1973). In 1974, 16.6 thousand acre-feet were withdrawn for irrigation, 11.7 thousand acre-feet for municipal supply, and 11 thousand acre-feet for industrial use (Texas Water Development Board, 1976).

It may be concluded that groundwater is not a viable sole source of most of the postulated industries' water requirements in the Brazosport area. The bases for this conclusion include the manifestation of excessive withdrawal by land subsidence around Freeport, recharge deficits in the coastal areas near Brazosport away from the recharge potential of the Brazos River, and the potential for increased subsidence and salt water encroachment.

Groundwater well fields could be developed to the north of the Brazosport area, avoiding depleted aquifer conditions around Houston and in the Jackson-Matagorda County area. Such development's cost would include, however, the construction and operation of a major pipeline to transfer the water to the Brazosport area. A combination of surface water and groundwater supplies will be required to meet industrial requirements.

Labor. The EDA survey of location determinants provides an idea of the number of persons employed in fully operational chemical and refining plants. Of the firms surveyed, 75 percent of the chemical firms and 83 percent of the refining firms indicated that employment would equal 100 or more (see Figure 33). Average 1974 plant employment in Texas for the petrochemical and refining industries was 286 and 406, respectively. It should be noted that those firms producing industrial organic chemicals (SIC 2869) employ more workers than other firms in the petrochemical industry, averaging 411 per plant (U.S. Bureau of Census, 1977).

Because of the concentration of the industries in the Texas coastal region, a pool of refinery and chemical plant workers already exists in Brazoria County. In December, 1975, for example, the chemical industry in the county employed 8,472 persons and the refining industry employed 635 persons. The county unemployment rate in April, 1977, was 4.5 percent. Of the 1970 county population aged 25 years or older, 22 percent had attended college and 75 percent had attended high school.

Figure 33

Expected Employment at Fully Operational Plants[1]

Employment	Percent Responding SIC 28[2] Chemicals and Allied Products	SIC 29[3] Petroleum Refining
Less than 100	25%	17%
100 – 249	39%	33%
250 – 499	21%	50%
500 or more	20%	0%
No. of Respondents	56	6

1. The survey used the SIC classification system in effect before 1972.
2. Consists of the following 3-digit SIC codes: 281 (Industrial Inorganic and Organic Chemicals), 282 (Plastic Materials), and 287 (Agricultural Chemicals).
3. SIC 2911, Petroleum Refining.

Source: U.S. Department of Commerce, Economic Development Agency, *Industrial Location Determinants, 1971-1975*, Section 1 (Washington, D.C.: Department of Commerce, February, 1973).

Although the existence of a labor force with experience in an industry is a positive point in most location decision, the lack of such force is not necessarily a constraint. Labor is the most mobile resource. Consequently, even if a trained labor force is lacking in an area, a firm may locate in the region with the expectation that labor will be attracted to the area by the job opportunities provided by the plant.

Land. Compared to other sectors, the chemical and refining industries require rather large tracts of land. In the EDA survey of plant characteristics, 48 percent and 57 percent of the firms in the chemical and refining industries, respectively, reported preferences for plant sites in excess of 100 acres. The postulated study site has sufficient large undeveloped tracts of land to accommodate both types of plants.

Other Possible Industrial Sectors

As mentioned in the beginning of this chapter, the purpose of the industry selection process was to identify some industries which could reasonably be expected to locate along a barge canal; it was not to predict future industrial development in the study area. The sectors chosen are obviously not the only industries which might be attracted to the study site or adjoining areas along the canal. The possibility that sectors other than those postulated in this study would utilize a barge canal should be kept in mind if such a project were actually undertaken.

One such additional sector might be the fabricated structural metal products industry, especially firms producing fabricated structural steel products (SIC 3441) and fabricated platework-boiler shops (SIC 3443). Of the firms in these sectors responding to the EDA survey of location determinants, 18 and 31 percent, respectively, indicated that the availability of water transportation was of critical or significant to average value. However, as seen in Figure 28, these sectors only account for a small proportion of total waterway use in Texas.

The location factors considered by the metal-machine tools and parts fabrication industries, ranked in order of importance, are (Wright and Matthews, 1971):

1. Near product markets
2. Good transportation
3. Unskilled labor supply
4. Skilled labor supply
5. Land availability

Plants in these industry segments tend to be smaller than plants in the petrochemical and refining sectors and require considerably less energy, water, labor, and land. The energy forms used for heat and power are primarily fuel oil, natural gas, and electricity. In 1974, firms with SIC codes 3441 and 3443 consumed 0.2, 0.3, and 0.4 percent of total U.S. industrial heating and power usage of fuel oil, natural gas, and electricity, respectively. Annual water intake is generally less than 20 million gallons and plant sites are rarely in excess of 100 acres (EDA, 1973). These industries' average plant employment in Texas in 1974 was 71.

Other sectors which might be expected to locate at the study site would include petrochemical and refinery service and supply firms such as equipment sales, construction contractors, and pipe fitting; barge service facilities; and chemical sectors utilizing petrochemical outputs, such as plastics, pharmaceuticals and fibers.

Summary of Industry Selection

An analysis of studies of location determinants, waterborne traffic in and near the study area, and commodity flows along the Gulf Intracoastal Waterway identified in petrochemical and petroleum refining industries as among those which utilize water transportation in general and barge transportation in particular. Other location determinants of these industries were discussed and the capability of Brazoria County to meet the other locational objectives was assessed. There seem to be no locational constraints to the industries locating in the study area. Thus, it is postulated in this study that firms in the petrochemical and refining sectors can locate in the study site. Other possible industries include the fabricated structural metal products sectors, chemical sectors and service and supply firms.

Specific Requirements of a Refinery – Petrochemical Complex

Firms in the petrochemical and refining sectors were considered in the previous section as likely to locate the study site. A typical complex of such firms would consist of a refinery to provide petrochemical feedstock and a billion pound-per-year olefins plant with associated production facilities and the appropriate downstream derivative and polymer production plants (Shell Oil Company, n.d.). The petrochemical portion would produce the basic organic chemicals and key derivatives which are usually manufactured close to feedstock sources and would be representative of expected future development in the petrochemical industry.

The development of petrochemical/refinery complexes will be caused in part by an anticipated shift in feedstocks to naphtha and gas because of the increasing price and diminishing supply of natural gas liquids. Although the change in feedstocks will increase the linkages between petrochemical plants and refineries in any case, both sectors would benefit from close relationships (National Petroleum Council, 1973a).

> To the refiner, the integrated complex offers an attractive disposal alternative for low quality gasoline streams and the olefins plant serves as a partial conversion unit in that gas oil can be converted to highly aromatic gasoline and to olefins for potential alkylation feed. On the other hand, the complex provides the petrochemical producer with an assured feedstock supply and a convenient and attractive means for disposal of energy products form the olefins plants.

Two types of refineries might locate at the site. The first, a "chemical refiner," would process crude oil "for the production of olefins and aromatics with no net production of energy pro-

Figure 34

Representative Petrochemical Complex[1]

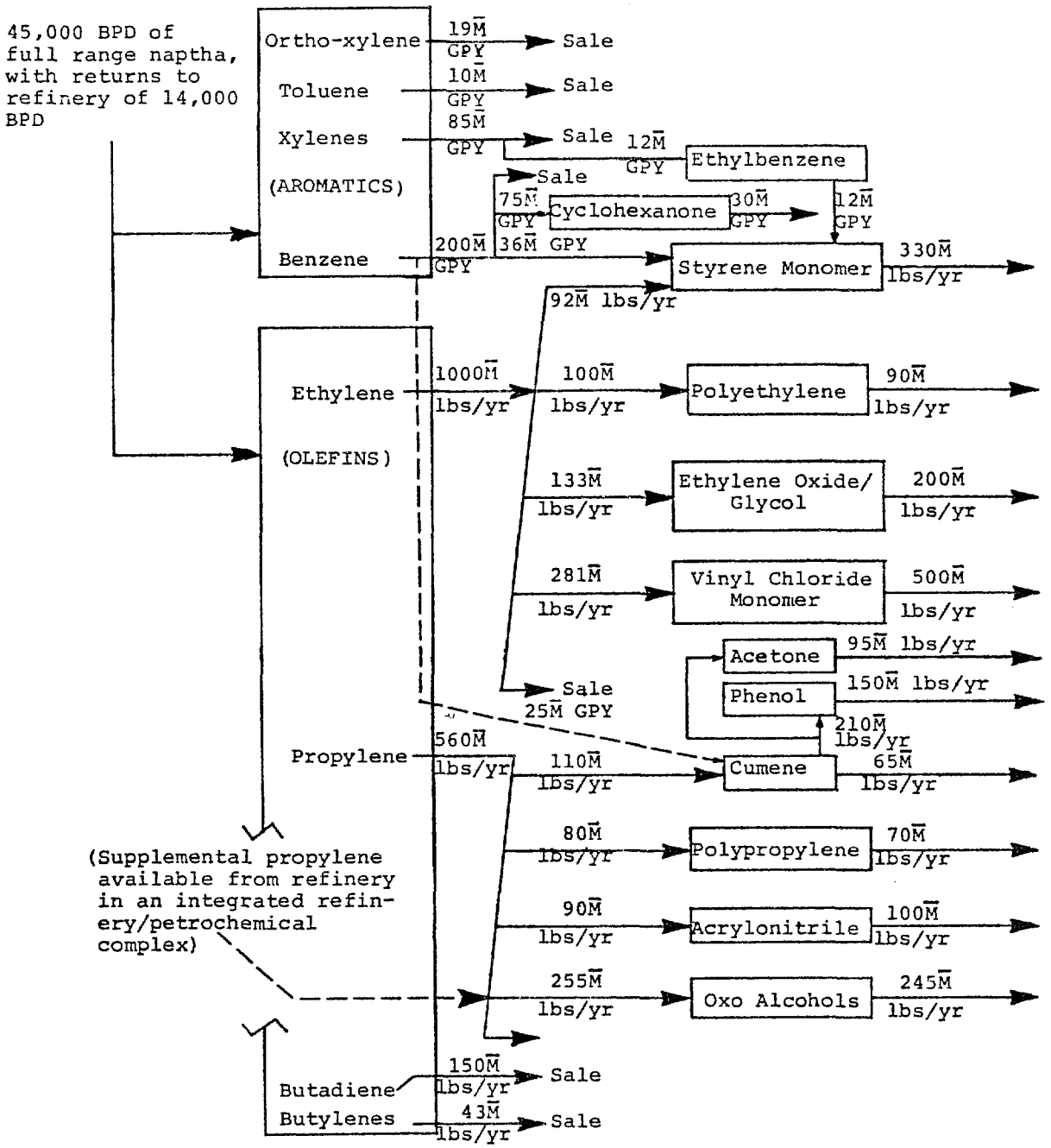

1. Relatively low severity process/high return process with a gross feedstock to ethylene ratio of 4.5.

Source: Resource Planning Associates, Inc. OCS Oil and Gas - An Environmental Assessment, Vol. 4, prepared for the Council on Environmental Quality (Washington, D.C.: GPO, April, 1974), p. IV-7.

ducts excepting residual fuel." (NPC, 1973a). These are not as economically attractive, however, as the second type of refinery--an integrated facility producing a wide range of products.

The initial capacity of new refineries is expected to average between 200,000 to 300,000 barrels per day (B/D) (A. D. Little, Inc., 1973). Thus, this study assumes that the refinery will be an integrated facility with an initial capacity of 250,000 B/D. Its product mix will include naphtha and/or gas oil which will be used as feedstock by the olefins plant.

The petrochemical portion of the site will center around the one billion pound per year olefins production facility, a standard-sized olefins plant of today. The particular complex of plants assumed in this study to be located at the site is presented in Figure 34. The combination is representative of the types which might cluster around a large olefins plant. Thus, the specific plants are to be considered as typical of those which might locate in a refinery/petrochemical complex rather than predictive of actual development of the site.

In the discussion which follows, historic and projected relationships between outputs and inputs are used to determine the specific land, labor, water, and energy requirements of the two industries. A complete summary of these requirements is provided in Figure 35. The use of historic relationships assumes, of course, that these relationships will continue into the future. Major changes in the relative resource prices or technology would affect optimal input combinations and thus specific input requirements. The suitability of the site with respect to these changes depends on the substitutability of inputs; a conversion to coal as an energy source and/or feedstock, for instance, would be complimented by a location with inland waterway access.

Figure 35

Requirements of Postulated
Refinery and Petrochemical Complex

	Refinery	Petrochemical Complex
Employment	870	1930
Land (acres)	1500 acres	400 acres
Electric Power (KWd/h)	653,000	2,400,000
Water Intake (mgd)	22.9	100.3-112.6

Refinery Requirements

Labor. Both the size and composition of the labor force may vary with the capacity and complexity of a refinery, where complexity in this sense is an index value measuring how complicated a refinery is vis-a-vis one with only a crude distillation unit (i.e. a refinery with a complexity of 9 is 9 times more complicated than one that conducts only crude distillation). The relationship between manpower (M), complexity (C), and capacity in barrels per day (B) has been estimated as follows (Nelson, 1974).

$$M = 28.5 + 27.6C - 0.77C^2 + 0.000354CB$$

Applying this formula to the hypothesized refinery with complexity of 9 (the average complexity of U.S. refineries as reported by Nelson, 1976b) and capacity of 250,000 B/D yields estimated total manpower requirements of approximately 1,010.

In addition to deriving total manpower requirements, Nelson has estimated the skill level of workers for a Gulf Coast refinery. Skills are divided into five classes and are presented with the percentage of employment in each class in Figure 36.

Figure 36

Classification of Employment
In a Gulf Coast Refinery
(Percent of Total Employment)

Type of Worker	Size of Refinery		
	Small	Average	Largest
Administrative	7%	5%	3%
Technical	8%	11%	8%
Operations	38%	26%	16%
Maintenance	37%	46%	59%
Others	10%	12%	14%
	100%	100%	100%

Source: *Oil and Gas Journal*, 16 December, 1974, p. 70.

In general, the industrial trend is toward larger refineries, suggesting that in the future, fewer operations and maintenance personnel will be required per barrel of output. However, these employees will require a new and higher level of skills (NPC, 1973b).

Estimations of a variety of industry requirements have been compiled from industry sources by Nelson and reported in the Oil and Gas Journal since 1958. His formula is used as a basis for estimating employment requirements. Assuming annual productivity increases of three percent, total employment at the postulated refinery in 1980 would be approximately 870. Of these, 226 would be operators, 400 would be maintenance workers, and the remainder would be divided between administrative, technical, and other positions.

Land. As with labor, land requirements vary with both the capacity and complexity of the refining operation. Nelson (1972) has estimated that about 26 acres per 10,000 B/D capacity would be used for buildings and processing units for a refinery of complexity 9. This compares with historical land use of 175 acres for each 10,00 B/D capacity, comprised of 22 acres for buildings and processing units, 13 acres for a buffer zone and 140 acres for further expansion (Nelson, 1972).

The ADL study derived the relationship between acreage and refinery capacity shown in Figure 37. Direct requirements are indicated by the dashed line. A 250,000 B/D refinery would require 850 acres. The study noted, however, that a "conservative rule of thumb" would be to at least double the direct requirements in determining the proper amount of land to be purchased. Thus, total land purchased for a 250,000 B/D refinery would approximate 1,700 acres.

Other studies have estimated slightly smaller sized tracts. The most recent analysis, done by the New England River Basins Commission (1976), determined that "a new domestic refinery in the 250,000 B/D range is likely to require on the order of 1,000 to 1,500 acres of clear, flat industrially zoned land." Another study estimated that 1,200 to 1,400 acres would be required for a 200,000 B/D refinery, allowing sufficient land for future expansion to 400,000 B/D (Research Planning Associates, Inc., 1974).

In this study, it is estimated that 1,500 acres would be required for a 250,000 B/D refinery, assuming that 26 acres would be used for building and processing units, and 13 acres for buffer zones for each 10,000 B/D of crude capacity. This would allow sufficient acreage for direct refinery operations, crude oil and product storage, waste treatment, and administrative facilities, and still provide space for expansion to 400,000 B/D.

Energy. The refining industry is among the heaviest users of energy in the U.S. Net energy consumption for refineries, however, has declined over time, as demonstrated in Figure 38. As the

Figure 37

Estimated Acreage Requirements
By Refineries

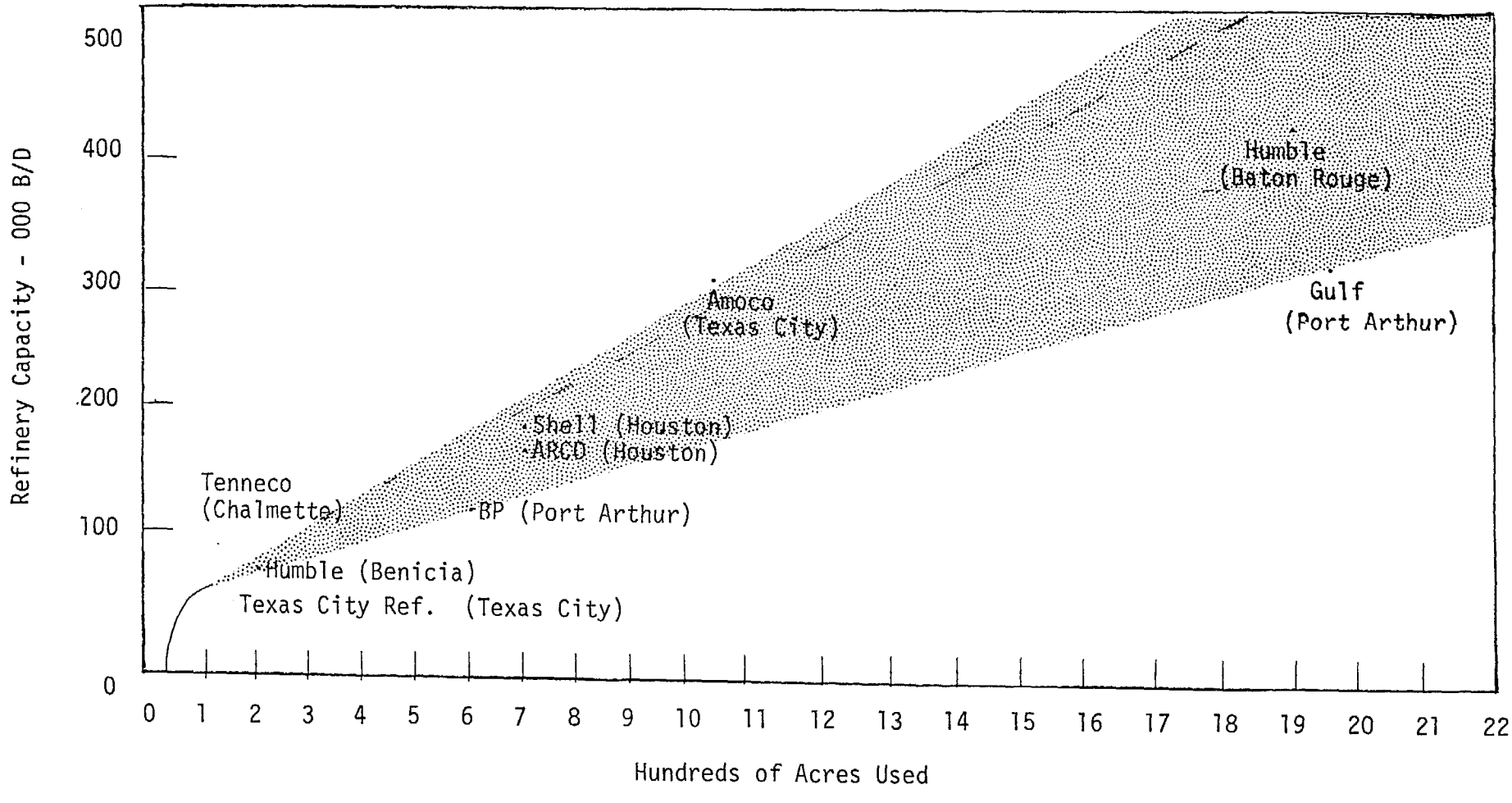

Source: Arthur D. Little, Inc., Potential Onshore Effects of Deepwater Oil Terminal - Related Industrial Development, Vol. IV, NTIS PB 224-021, September, 1973.

Figure 38

Net Energy[1] Constumption of Average U.S. Refineries

(Percentage of Crude Oil)[2]

Year	Complexity 3	5	7	9	11	13
1930	6.15	10.2	14.4	—	—	—
1950	5.8	9.6	13.5	16.3	—	—
1955	5.2	8.75	12.2	15.75	19.3	22.8
1960	4.8	7.95	11.15	14.4	17.6	20.8
1965	4.4	7.4	10.4	13.4	16.4	19.3
1970	3.9	6.5	9.1	11.7	14.4	17.0
1973	3.4	5.65	8.0	10.25	12.55	14.8
1975 est.	2.8	4.8	6.65	8.6	10.5	12.4

1. Fuel, catalytic coke, gases, purchased steam, and purchased power less steam on power sold.
2. Energies converted to BTU/bbl divided by 6,300,000 BTU/bbl fuel. The barrels of fuel oil are stated as percentage of crude oil. Five-year averages around dates shown, except for the years 1973 and 1975. New refineries (under 6 years old) use about 10 percent less than average refineries.

Source: *Oil and Gas Journal,* 17 March 1975.

cost of fuel has increased, refineries have been willing to invest to save fuel. Nelson (1975) suggests, however, that the industry is approaching a limit to further reduction of energy consumption using the present technology.

The total power required per barrel of output has been estimated by Nelson (1976a) according to the following formula:

$$\text{Total power per barrel} = 0.2 + 0.3 \text{ Complexity}$$

These total power requirements include power needed for water treatment, water pumping, tank farms, transfer pumping and other offsite activities in addition to power required to process each barrel of crude throughput. Thus, a refinery of 250,000 B/D capacity would requie 653,000 KWH per day, assuming that crude throughput was equal to 90 percent of capacity.

Water. Industry water requirements vary by quantity, by quality, and by use. The uses of water by a refinery include processing, power, cooling, boiler feedwater, and sanitation and other services related to employees. Water utilized in processing is either incorporated into the final product or used in the cleaning and conveyance of inputs. The use of water for power generation includes in-plant generation of energy such as steam. Cooling water is associated with furnace cooling and air conditioning.

Total industrial water requirements are generally estimated by examining the relationships between water intake and a standard unit such as value added, number of employees, or volume of output. In 1973, the yearly water intake of Texas refineries averaged 38.6 gallons per dollar of value shipped and 9.4 million gallons per employee.

As Figure 39 shows, differences in these relationships exist between Texas and U.S. For instance, water use per employee for the U.S. refining industry other than in Texas is 45 percent higher than in Texas. Substantial variation exists within the refinery industry concerning gross water used, net water used, total water intake, and composition of water intake and discharge. The quantity and quality of water used in any production process is particularly variable. According to

Figure 39

Water Intake, Value Added, and Employment in the Refining Industry in Texas and the U.S., 1973[1]

	Texas	U.S. Excluding Texas
Water Intake (Billion gallons)	272.6	1,009.9
Value Added ($ Million)	1,300.9	3,017.6
Employment (1,000)	29.1	74.1
Gallon of Water Intake Per Dollar of Value Added	209.5	334.7
Water Intake (Million gallons) Per Employee	9.4	13.6

1. Data is only for firms which reported water consumption of 20 million gallons or more.

Source: U.S. Bureau of the Census, 1972 Census of Manufactures, *Special Report Series: Water Use in Manufacturing,* MC 72(SR-4) (Washington, D.C.: GPO, 1975).

Bowers (1966), water use in the petroleum industry will vary for any particular plant and plant site even within the same area and with similar production mixes.

In estimating water requirements for the proposed refinery, U.S. Bureau Census data (1975a) was used, as this reflects the most current usage rates by the refining industry in Texas. Assuming an intake rate of 9.4 million gallons per employee per year and employment of 870, the refinery would use 8.4 billion gallons of water per year, or 22.9 million gallons per day (mgd).

This is slightly higher than the range of water requirements estimated by other studies, a result which can be partially explained by the higher employment level assumed in this study and the fact that current usage rates reflect some older, less efficient plants. Resource Planning Associates (RPA, 1974), in comparison, estimated that four mgd would be required per 10,000 B/D of capacity. Thus, a 250,000 B/D refinery would require 10 mgd. On the other hand, A. D. Little (1975) postulated that a 250,000 B/D refinery would require 20.9 mgd.

According to the National Petroleum Council (1973b), water use per barrel of crude throughput has decreased substantially over the last two decades.

> In the early 1950's refineries typically used 350 gallons of water per barrel of crude intake; by 1960 this figure had dropped to 175 gallons per barrel; today some refineries have a water usage of less than 40 gallons per barrel of crude intake.

This compares with a usage in the hypothesized refinery of 102 gallons per barrel of crude throughput, assuming operations at 90 percent of capacity.

Petrochemical Requirements

Labor. A common approach to estimating typical manpower requirements of a petrochemical complex is based on the relationship between employment and value of output. In this process, employment is the product of number of workers per value of output times expected sales of the petrochemical complex.

Employment per million dollars of shipments in the chemical industry in Texas in 1973 was 8.5, compared to a national ratio of 13.8 (U.S. Bureau of Census, 1975b). This indicates that operations in Texas are less labor-intensive than in the nation as a whole.

Annual sales of the postulated petrochemical complex are estimated at $341 million (1973 dollars), as shown in Figure 40. The employment to value of shipment ratio utilized in this study represents the 1973 employment per million dollars of sales for firms in the plastics materials (SIC 282) and industrial organic chemicals (SIC 286) sectors in Texas (U.S. Bureau of Census, 1976). These sectors were chosen because the outputs of the postulated complex are normally produced by firms in these sectors. The resulting ratio of seven was applied to estimated sales, giving estimated employment in the complex of 2,390 at 1973 productivity levels. Required employment would decrease to 1,930 in 1980, assuming annual productivity increases of approximately three percent.

Figure 40

Sales Value of Representative Complex[1]

Product	Annual Output (Millions)	Average 1973 Price Per Unit (Cents)	1973 Sales Value ($ Millions)
1. Orthoxylene	20 gal.	36	7.2
2. Toluene	10 gal.	22	2.2
3. Xylenes	85 gal.	20.5	17.4
4. Benzene	200 gal.	29.2	58.4
5. Cyclohexane	30 gal.	46.9[2]	14.1
6. Ethyl benzene	12 gal.	33.5[3]	4.0
7. Styrene	380 lbs.	16	60.8
8. Ethylene	1,000 lbs.	3	30.0
9. Polyethylene	901 lbs.	14	12.6
10. Ethylene glycol	200 lbs.	7	14.0
11. Vinylchloride monomer	500 lbs.	4	20.0
12. Propylene	560 lbs.	2.8	15.7
13. Cumene	275 lbs.	10 [4]	27.5
14. Phenol	150 lbs.	8	12.0
15. Polypropylene	70 lbs.	17	11.9
16. Acrylonitrile	100 lbs.	11	11.0
17. Oxo alcohols	245 lbs.	6	14.7
18. Butadiene	150 lbs.	27	4.1
19. Butylenes	40 lbs.	9	3.6
			$341.2

1. Source for all products except Cumene and Butylene was Baumgartner, man. ed, *Predicasts' Basebook*, 1976.
2. Assumes a conversion factor of 6.7 lbs/gal.
3. Source was U.S. International Trade Commission, *Synthetic Organic Chemicals*, U.S. Production and Sales of Cyclic Intermediates, 1974 preliminary.
4. Source was U.S. International Trade Commission, *Synethic Organic Chemicals*, U.S. Production and Sales of Crude Products from Petroleum and Natural Gas, 1974 preliminary.

The distribution of employment between production and administrative personnel has been estimated to be in the ratio of 3:2 (Happel, 1975). Thus, the representative complex would employ about 1,158 production workers and 772 administrative workers.

Land. Land requirements for petrochemical complexes are often estimated by considering the relationships between acreage and employment or acreage and output. Plants in the chemical industry have an average 9.5 employees per acre (Ide, 1970). Applying this ratio to estimated employment for the postulated petrochemical complex yields a land requirement of about 203 acres.

A. D. Little (1973) hypothesized that one acre of land would be required per $1.75 million annual output. Use of this relationship implies a land requirement of 195 acres.

RPA (1974) estimated that about 350 acres would be required for a petrochemical complex similar to the one postulated in this study. They assume, however, that future land requirements will increase due to such factors as a need for additional buffer land in response to increased environmental pressures.

Estimates of acreage requirements derived through the application of Ide's and A. D. Little's relationships would seem to be conservative in view of current trends toward less intensive use of land and larger buffer zones. The former ratio in particular does not consider productivity increases, a result of which is fewer employees per plant, thus fewer employees per acre.

In view of the above, a site of between 300 and 400 acres would seem to provide sufficient space for production and support activities while allowing for future expansion and adequate buffer zones.

Energy. As discussed previously in this chapter, the petrochemical industry is a heavy user of energy, accounting for about 14 percent of total industries purchased energy consumption in the U.S. in 1974 (see Figure 30).

Electric power requirements for the petrochemical complex were estimated by first deriving electricity use per employee and then multiplying this ratio by expected employment. As shown in Figure 41, average use of electricity in the petrochemical industry in Texas equals 0.45 MM KWH per employee per year. Applying this ratio to the expected employment of 1,930 gives an estimated electric power requirement of 869 billion KWH per year or 2.4 million KWH per day.

Water. The chemical industry (SIC 28) is a major user of water in Texas, accounting for 56 percent of total industrial water intake. This is in part because it represents a major industrial sector within the state. A more meaningful picture of water use is provided by Figure 42, which presents water intake per employee and per dollar of value added for the Texas and U.S. chemical industry.

Water intake per employee by Texas industry as a whole is more than triple that of industry as a whole in the rest of the nation and this differential is maintained within the chemical industry. The chemical industry in Texas used 21.3 million gallons per employee in 1973 as compared with 6.5 million gallons per employee by the industry in the rest of the nation.

Two techniques are available for determining water intake requirements. The first was developed by Marshall (1973) in his studies of the relationship between employment and fresh water intake in million gallons per day (mgd) for various industries in Texas. He determined that the following relationship existed for firms in the chemical industry (SIC 28):

$$\text{Water Intake (mgd)} = 0.038 + 0.009 \text{ Employment}$$

Since employment in the hypothesized petrochemical complex is estimated to be 1,930,

Figure 41

Electric Power Use By
The Texas Petrochemical Industry, 1974

Employment in Texas Petrochemical Industry[1]	38,689
Electric Energy Used By Texas Petrochemical Industry[2] (Million Kwh)	17,329.3
Purchased	11,814.2
Generated Less Sold	5,515.1
Use of Purchased Electricity (Million KWh) Per Employee Per Year[3]	0.31
Total Use of Electricity (Million KWh) Per Employee Per Year[4]	0.45

1. U.S. Bureau of the Census, *County Business Patterns,* 1974 (Washington, D.C.: GPO, 1977). Data is provided for SIC's 282 and 286.
2. U.S. Bureau of the Census, *Fuels and Electric Energy Consumed,* Annual Survey of Manufactures, 1974 (Washington, D.C.: Department of Commerce). Data is provided for SIC's 282 and 286.
3. Purchased electricity divided by employment.
4. Total electric energy used divided by employment.

Figure 42

Water Intake, Value Added,
And Employment in the Chemical
Industry[1] in Texas and the U.S., 1973[2]

	Texas		U.S. Excluding Texas	
	Chemical Industry	All Industries	Chemical Industry	All Industries
Water Intake (Billion gallons)	930.1	1,669.8	3,246.1	13,354.5
Value Added ($ Million)	2,719.1	8,283.8	20,198.3	164,476.5
Employment (1,000)	43.6	258.4	499.7	6,824.6
Gallon of Water Intake Per Dollar of Value Added	342	202	161	82
Water Intake (Million gallons) Per Employee	21.3	6.5	6.5	2.0

1. SIC 28.
2. Data is only for firms which reported water consumption of 20 million gallons or more.

Source: U.S. Bureau of the Census, 1972 Census of Manufactures, *Special Report Series: Water Use in Manufacturing,* MC 72(SR-4) (Washington, D.C.: GPO, 1975).

fresh water requirements would equal about 17.3 mgd. Applying the 1973 total water intake to the fresh water intake ratio of 5.8 gives an estimate of total water required of about 100.3 mgd.

The second estimation technique is based on the ratio of total water intake to employment, equal to 21.3 million gallons per employee per year in 1973. This ratio, multiplied by employment in the complex, result in a daily water requirement of approximately 112.6 mgd.

Thus, daily water intake is expected to range between 101 and 113 mgd. Using the 1972 water composition rates from the U.S. Bureau of Census (1975a), water intake would be comprised of about 17 percent fresh water, 12 percent brackish water, and 71 percent salt water. The resulting water intake requirements are:

Total Water Intake	100.3– 112.6 mgd
Fresh	17.1– 19.1 mgd
Brackish	12.0– 13.5 mgd
Salt	71.2– 80.0 mgd

Summary

The estimated total requirements for the postulated refinery and petrochemical complex are summarized in Figure 35. A comparison to the study area indicates that labor, land, and energy would not constrain industrial development. Fresh water is more limited in availability but initial requirements could be provided by a combined groundwater and surface water supply.

Industrial Location Analysis References

Arthur D. Little, Inc. 1973. *Potential Offshore Effects of Deepwater Oil Terminal–Related Industrial Development,* Volum IV, NTIS PS 224 021, September, 1973.

———. 1975. *Petroleum Development in New England,* Volume II. Energy Program Technical Report 75-6, prepared for the New England Regional Commission.

Baumgartner, R. (ed.). 1976. *Predicasts' Basebook.* Cleveland, Ohio: Predicasts, Inc.

Bower, B. T. 1966. "The Economics of Industrial Water Utilization" *Water Research.* Baltimore: The Johns Hopkins Press.

Happel, J. and D. G. Jordon. 1975. *Chemical Process Economics,* 2nd edition. New York: Marcel Dekker, Inc.

Hunker, H. L. 1974. *Industrial Development.* Lexington, Mass.: Lexington Books.

Ide, E. A. 1970. *Estimating Land and Floor Area Implicit in Employment Projections.* Prepared for the Federal Highway Administration, July, 1970.

International Petroleum Encyclopedia. 1976. Tulsa, Oklahoma: The Petroleum Publishing Co.

Kearney, A. T., Inc. 1974. *Domestic Waterborne Shipping Market Analysis.* Prepared for the Maritime Administration, U.S. Department of Commerce.

Kinnard, W. N. and S. D. Messner. 1971. *Industrial Real Estate,* 2nd edition. Washington, D.C.: Society of Industrial Realtors.

Marshall, J. L. 1973. *Industrial Water Use in the Texas Coastal Zone.* Technical Report EHE-73-03, CRWR-101. Center for Research in Water Resources. Austin: University of Texas at Austin.

McGregor, John R. 1970. "Water as a Factor in the Location of Industry in the Southeast" *Southeastern Geographer,* Vol. X, No. 1, pp. 41-54.

National Petroleum Council. 1973a. *Factors Affecting U.S. Petroleum Refining: Impact of New Technology.* National Petroleum Council, Committee on Factors Affecting U.S. Petroleum Refining, September, 1973.

———. 1973b. Factors Affecting U.S. Petroleum Refining. Prepared by NPC's Committee on Factors Affecting U.S. Petroleum Refining.

Nelson, W. L. 1972. "How Much Land Investment Needed for Grass Roots Refineries." *Oil and Gas Journal.* December 4, 1972, pp. 56-57.

———. 1974. "Manpower and Labor Costs." *Oil and Gas Journal.* December 16, 1974. pp. 70-72.

———. 1975. "Energy Consumption Declines." *Oil and Gas Journal.* March 17, 1975. p. 132.

———. 1976a. "Unit Utility Requirements." *Oil and Gas Journal.* June 14, 1976. p. 73.

———. 1976b. "How to Apply Complexity." *Oil and Gas Journal.* September 27, 1976. pp. 83-84.

New England River Basins Commission. 1976. *Onshore Facilities Related to Offshore Oil and Gas Development, Factbook.* Boston, Mass.: New England River Basins Commission.

Resource Planning Associates, Inc. 1974. *OCS Oil and Gas—An Environmental Assessment,* Volume 4. Prepared for the Council on Environmental Quality. Washington, D.C.: GPO, p. IV-7.

Rice Center for Community Design and Research. 1976. *Texas Gulf Coast Program—Research Report 1.* 3 volumes. Rice Center for Community Design and Research, Houston, Texas.

Sandeen, W. M. and J. B. Wesselman. 1973. Ground Water Resources of Brazoria County, Texas. Prepared by the U.S. Geological Survey under cooperative agreement with the Texas Water Development Board, Report 163.

Shell Oil Company. No date. *The National Energy Problem: Implications for the Petrochemical Industry.* Houston, Texas: Shell Oil Company.

Texas/Louisiana Petrochemicals. 1975. Prepared for the Petrochemical Energy Group. Houston: Groppe and Long.

Texas Water Development Board, Texas Natural Resource Information Service. 1976. Self-reported, self-supplied water use by county. Computer file. Data as of 1974.

Townroe, P. M. 1971. *Industrial Location Decisions.* Center for Urban and Regional Studies, The University of Birmingham. London: Research Publications Services Ltd.

U.S. Bureau of the Census. 1975a. *1972 Census of Manufactures, Special Report Series: Water Use in Manufacturing,* MC 72 (SR-4). Washington, D.C.: GPO.

———. 1975b. *Census of Transportation, 1972, Commodity Transportation Survey—Area Series: Area Report 6,* TC 72C2-6. Washington, D.C.: GPO.

———. 1976. *Annual Survey of Manufactures, 1974, Fuels and Electric Energy Consumed.* Series N74 (AS)-42. Washington, D.C.: Department of Commerce.

———. 1977. *County Business Patterns, 1974.* Washington, D.C.: GPO.

U.S. Department of Commerce, Economic Development Administration. 1973. *Industrial Location Determinants 1972-1975, Section 1.* Washington, D.C.: Department of Commerce.

U.S. International Trade Commission. 1974. *Synthetic Organic Chemicals. U.S. Production to Sales of Crude Products from Petroleum and Natural Gas, preliminary.* Washington, D.C.

———. 1974. *Synthetic Organic Chemicals. U.S. Production and Sale of Cyclic Intermediates, preliminary.* Washington, D.C.

Whitehorn, Norman C. 1973. *Economic Analysis of the Petrochemical Industry in Texas.* Texas A&M University. Sea Grant 73-203.

Wright, Arthur L. and Warren T. Matthews. 1971. *Industrial Economic Development and Factors Affecting Industrial Location on the Texas Gulf Coast.* Industrial Economic Research Division, Texas Engineering Experiment Station, Texas A&M University. SG-71-214.

ENVIRONMENTAL ENGINEERING

The objective of this section is to develop criteria for project layout, design, and construction. The criteria recognize typical problems associated with development and express these problems as physical-biological system constraints, natural hazards constraints, and socioeconomic system constraints. Engineering alternatives are reviewed which satisfy these constraints as well as the project requirements. The analysis culminates in a design criteria summary matrix, which is a tool for evaluating tradeoffs between mutually exclusive design objectives.

Environmental Constraints

Introduction

Environmental constraints express objectives which relate environmental quality to project design. The most general objective is the minimization of deleterious environmental impact. All environmental constraints assume the objective.

The general approach to designing this inland canal project incorporates environmental constraints from the beginning. The foresight allowed by this approach is instrumental in realizing the stated objective throughout the project design. However, at this phase of design there is clearly no *a priori* certainty of the impacts to be incurred by an inland canal/industrial site development. The set of constraints presented in this section are derived from a survey of literature pertaining to coastal or wetland construction related impacts in general and impacts of inland waterways in particular (Darnell et al., 1976; Thurow, Toner, and Erley, 1975; Gianno and Wang, 1974; EPA, 1973). The survey provides an array of problems to be expected in designing the inland canal and industrial site development and operation. This array of problems is the set of impacts to be minimized, and is expressed as designed constraints.

Certain aspects should be considered in specifying a set of environmental constraints. First, any project will obviously produce environmental change. Therefore, most constraints are expressed as minimizations or maximizations; few can be expressed as the absolute 'avoid.' Second, constraints apply over different time scales. Activities resulting in direct and immediate effects may be differently constrained than activities imposing long-term, essentially permanent, effects. Finally, constraints should reflect all aspects of the environment which may be altered, not solely ecological or fiscal.

The following section presents three constraint groups; physical and biological systems, natural hazards, and socioeconomic systems (Figure 43). Each group is discussed in terms of the bases for concern and the nature of their constraints. These constraints form the basis for evaluating environmental data elements (see Appendix C) and aid in the selection of a least environmental impact corridor for the inland canal/industrial site development (see Chapter III-C).

Figure 43

Environmental Constraints

I. PHYSICAL-BIOLOGICAL SYSTEMS

A. Direct Biological Constraints
   1. Minimize disruption of wildlife habitat, migration routes, feeding zones
   2. Avoid rare and endangered species habitat and rookeries
   3. Minimize disruption of productive bay and estuarine areas
   4. Minimize disruption of productive wetland areas

B. Biological Support Constraints
   1. Minimize disruption to natural drainage and maximize fresh water inflow to wetlands and estuaries
   2. Minimize erosion and sedimentation
   3. Maximize air quality

C. Physical/Chemical Contraints
   1. Minimize breaching of groundwater aquilude
   2. Minimize disruption of aquifer recharge zones
   3. Minimize disruption of riverine systems
   4. Maximize biological productivity of inland canal
   5. Maximize water quality (canal, surface, and subsurface)

II. NATURAL HAZARDS

A. Minimize Flood Potential
B. Avoid Areas of Active Subsidence
C. Minimize Accelerated Subsidence
D. Avoid Areas of Active Surface Faulting
E. Avoid Areas of Active Shoreline Erosion
F. Preferentially Develop on Stable Substrates

III. SOCIOECONOMIC SYSTEMS

A. Cultural Constraints
   1. Minimize disruption of existing and potential human settlement
   2. Minimize relocations of railroads and highways and maximize use of existing access and right-of-way
   3. Minimize congestion of existing land transportation
   4. Minimize disruption of productive agricultural land
   5. Minimize disruption of recreational resources
   6. Minimize disruption of archeological and historic resources
   7. Minimize disruption of existing and potential extractive resources
   8. Minimize visual impact

B. Infrastructural Constraints
   1. Minimize overburdening of existing infrastructure
      a. water supply and water treatment
      b. waste (solid and liquid) treatment and disposal
      c. police and fire departments
      d. schools, hospitals, parks, and other community facilities
   2. Minimize loss to local tax base
   3. Minimize out-migration of labor

Physical and Biological Systems

The coastal zone contains many transitions or gradations, such as between habitat types, substrate properties, and groundwater quality. These spatial changes are in large part due to a unique interrelationship of the physical processes of the coastal zone, such as the degree of influence of upland freshwater runoff versus tidal salt-water flooding, continental air masses versus sea breezes, and fluvial sediment influx versus the actions of marine erosion and transport. Constraints on coastal projects must be sensitive to the value of resources and to the dynamic intersystem relationships which often form the basis of those values.

The constraints of the physical and biological systems are divided into three groups, which are direct biological constraints, biological support constraints, and other physical/chemical constraints.

Direct Biological Constraints. One of the most damaging effects of construction in the coastal zone is the removal of habitats. Direct biological constraints address this problem. Of special concern are rare and endangered species habitats and productive wetland and estuarine areas. The bases for concern are that such areas are usually irreplaceable and that these habitats provide an important link between the natural environment and its human use. It is well established that estuarine and coastal wetlands characterized by a certain interchange of saline and fresh water are prime habitat for commercial fish during spawning and nursing life stages (Odum, Copeland, and McMahan, 1974). The direct biological constraints require a project design which minimizes immediate and long-term habitat disruption or loss.

Biological Support Constraints. Biological support constraints are stated separately from direct constraints to emphasize the fact that coastal habitats require the coinfluence of various processes. The value of the coastal habitats derives from the storing, in the coastal habitats, of nutrients and water provided by both upland runoff and tidal forces (Odum, Copeland, and McMahon, 1974). This category essentially constrains the project design to conserve habitat quality, and measures that quality by the processes which contribute to the value of that habitat.

Physical/Chemical Constraints. The other physical/chemical constraints in this major group reflect more general environmental features rather than ecological features. Some of the constraints identify the importance of maintaining groundwater resources during the site preparation and construction phases. Others address the need to protect coastal water quality from sedimentary, thermal, or chemical pollution, and the desire to design a channel of high environmental quality which complements the local area. A final constraint on riverine changes reflects the importance of drainage systems, both major and minor, as the conveyances of much of the nutrients, sediments, and water upon which the ecosystems depend.

Natural Hazards

Natural hazards impose design constraints because of their potential for structural and property damage rather than because of the potential for impact by the project on the natural environment. There are five major natural hazards along the Texas Gulf Coast which should be considered by any project. These are flooding, subsidence, faulting, shoreline erosion, and substrate stability. Flooding due to either river overbanking or hurricane surge-tide is an obvious constraint because of the potential for property damage, accidental spills, and loss of life. Areas of active subsidence and active surface faulting should be avoided. Little engineering control is currently available over these hazards which may cause extensive structural damage. Shoreline erosion is a concern because of the active loss of land and the potential for destruction or damage to piers, dwellings, highways, and other nearshore structures. The constraint to minimize the hazard of shoreline erosion on the project is complemented by the constraint to minimize additional erosion in the first constraint group, physical and biological systems. Finally, the stability of substrates for constructing heavy load foundations is also an important constraint. The basis of concern is the potential for structural damage to roads and buildings if substrates possess high shrink-swell potential or low load-bearing strength. The constraint is expressed as a preferential use of stable substrates, thus minimizing engineering cost in reducing the hazard.

It should be noted that many of these natural hazards are interrelated. Land subsidence increases the area of flooding influence and the extent of active erosion. When subsidence is due to ground-fluids withdrawal, differential subsurface compaction may result in surface faulting (Kreitler, 1976; Brown et al., 1974). Therefore, a project design should attempt to avoid or minimize related hazards, not solely individual hazards.

Socioeconomic Systems

Human uses is an important aspect of the environment. The socioeconomic systems of the environment discussed here include cultural and infrastructural features and do not include human use features of the natural environment, such as hunting and bird-watching.

Cultural constraints are distinguishable from infrastructural constraints, although there are many strong relationships between culture and infrastructure. There is certainly a substantial degree of overlap. However, a misclassification within these subgroups (Figure 43) is not serious. It should be kept in mind that classification is an aid in considering the various constraints. What is important is the consideration of all relevant constraints in project design, irrespective of their grouping.

Cultural Constraints. These constraints reflect the potential for creating adverse community attitudes, for disrupting life styles, population distribution patterns, and cultural artifacts for incurring expense in required relocations, and for affecting economic practices. It is obvious that any of these problems would increase the cost of a project. Some of the costs could be measured in dollars, for example, the cost of relocating homes. However, some costs are not easily quantifiable and are subjective, but not necessarily of small importance. Such a cost may be expressed as a negative feeling about giving up a home; or changing community life style.

Infrastructural Constraints. These constraints derive from the potential for impact on community's ability to provide services to its residents and businesses. Rapid population growth associated with major construction projects often results in overuse of services and a decrease in governmental ability to timely provide services (Wolf, 1974; Shields, 1975). Services most typically affected include water supply and water treatment, waste (solid and liquid) treatment and disposal, police and fire departments, and schools, hospitals, and community facilities, such as parks. Infrastructural problems may also arise from outmigration of labor and from a decreasing tax base (Carnes and Friesma, 1975).

The various potential problems impose constraints on design implementation and long-range development planning, rather than on physical project engineering.

Environmental Constraint References

Brown, Jr., L. F., R. A. Morton, J. H. McGowen, C. W. Kreitler, and W. L. Fisher. 1974. *Natural Hazards of the Texas Coastal Zone.* University of Texas at Austin. Bureau of Economic Geology. p. 12.

Carnes, S. and P. Friesma. 1975. *Urbanization and the Northern Great Plains.* Northwestern University, Center for Urban Affairs: Evanston, Illinois.

Darnell, R. M. et al. 1976. *Impacts of Construction Activities in Wetlands of the United States.* U.S. Enivronmental Protection Agency. Office of Research and Development. Corvallis Environmental Research Laboratory. Corvallis, Oregon. p. 392.

Gianno, S. P. and H. Wang. 1974. *Engineering Considerations for Marinas in Tidal Marshes.* University of Delaware. College of Marine Studies. Newark, Delaware. p. 105.

Kreitler, C. W. 1976. Faulting and Land Subsidence from Ground-Water and Hydrocarbon Production, Houston-Galveston, Texas. Proc. Second International Symposium on Land Subsidence. Anaheim, California. December, 1976.

Odum, H. T., B. J. Copeland, and E. A. McMahon. 1974. *Coastal Ecological Systems of the United States.* Vol. I-IV. The Conservation Foundation: Washington, D. C.

Shields, M. A. 1975. "Social Impact Studies: An Expository Analysis." *Environmental and Behavior.* Vol. 7, No. 3. Sage Publications, Inc. New York. pp. 265-284.

Thurow, C., W. Tones, and D. Erley. 1975. *Performance Controls for Sensitive Lands: A Practical Guide for Local Administrators.* American Society of Planning Officials. Planning Advisory Service. Chicago. Report Nos. 307, 308.

U.S. Environmental Protection Agency. 1973. *The Control of Pollution from Hydrographic Modifications.* U.S. Government Printing Office: Washington, D.C. p. 188.

Wolf, C. P. (ed.). 1974. *Social Impact Assessment.* Environmental Design Research Association, Inc. Milwaukee.

Engineering Alternatives

The following section discusses alternative approaches, methods, and materials which can be used in designing an inland canal complex. The choice among the alternatives presented will be determined by the problems imposed by the industrial location requirements and environmental constraints. Four categories of alternatives have been identified: channel and harbor design; channel and harbor excavation; industrial site area development; and relocations. The discussion compares the advantages and disadvantages of each alternative as well as cost and other influencing factors. A summary of the engineering alternatives is presented Figure 44.

Channel and Harbor Design

Access to an industrial site from existing navigation routes is a primary project design objective. Associated environmental constraints include avoiding conflicts with coastal wetlands and protection from hurricane storm surge. Because the channel and harbor comprise a major portion of the site development investment, a cost efficient design is also a priority concern.

This section considers channel routing from existing waterways to the proposed industrial site; geometry of the project channel; design limitations such as substrate characteristics, side slope stabilization, and surface drainage; and a generalized design for docks and bulkheads.

Channel Routing. The Gulf Intracoastal Waterway (GIWW) is the major bargewater navigation artery along the Texas coast. It provides access to the entire United States inland waterway system, and allows transshipment with deepwater navigation. The GIWW system crosses all Texas deepwater channels and includes tributary bargewater channels. Access to an inland site from the GIWW is a requisite attainable by three possible routes: indirectly via an existing bayou or river channel; indirectly with connection through an existing bay channel; or directly with a cut through coastal lowlands.

Access to an inland industrial site located above hurricane surge-flood elevation, utilizing existing river or bayou navigation projects, would entail a short project channel length. This alternative minimizes excavation costs. An additional advantage of this alternative is that a channel flushing system could be constructed using the natural drainage forces of the river or bayou. Particular disadvantages including shoaling at the junction of the project channel and the river channel, increased barge travel time, and navigation problems during flood stage.

Figure 44
Engineering Alternatives

Alternative	Advantages	Disadvantages	Cost	Influencing Factors		References
1. Channel Design and Routing						
A. Channel Route						
1. From GIWW to site	Low dredging maintenance	Flushing provision - See "G"	Cost controlled by routing. 1976 Means Cost Data indicates 1.00-2.50/cy for dragline or clamshell			Godfrey, ed. 1975
2. From GIWW via river to site	Flushing, reduced channel length, less excavation	High sediment; higher sediment loads carried by stream may require more frequent maintenance dredging	Maintenance dredging			Godfrey, ed. 1975
3. Follow high ground route	Least drainage inflows and erosion	More excavation, less fresh water inflow for flushing	More excavation cost to remove overburden			
4. Follow low ground route	Less excavation, more inflow for flushing	Possible flooding and erosion	Flood protection may be required			
5. Straight route	Shortest length, ease of navigation	Difficult to avoid natural or man-made features				
6. Curved route	Best fit to avoid natural or man-made features	Difficulty in navigation, greater channel length	More excavation, but may be offset by reduced relocation costs	Allowable direction change dictated by controllability of vessels; widen channel in bends to allow for swing of vessels and to provide increased maneuver		
B. Channel and Port Geometry				Site area/unit length; industry types may dictate special needs which define port geometry		McFarland et al, 1976
1. "U"-shaped	Flushing. Largest port area	More construction required	Bridges; channel length			
2. "T"- or "Y"-shaped	Good port service area	Possible flushing problems				
3. "L"-shaped	Landform fit. Tidal flushing					
4. "I"-shaped	Least construction. Tidal flushing	Poor port service area				
5. Crescent	Landform fit. Tidal flushing	Possible poor service area				
6. Canal-river systems	May incorporate features allowing for greater flushing Similar to "L" or "I" shape	High sediment loading; increased maintenance dredging	Maintenance dredging .45/cy; see I-A-2			
C. Channel Dimensions				Area equation when used w/water depth will give cross-sectional area of the channel at that depth. When it is desired to find the cross-sectional area required for excavation, be sure to consider depth from original land surface to channel bottom. See note in I-C-1 for volume excavation. Area = $bd + zd^2$ where b = bottom width d = depth z = side slope ratio A in ft^2 Vol. = $L\left(\frac{A_1 + A_2}{2}\right)$ where L = length A_1 = area at start of reach A_2 = area at end of reach CY = Vol., ft^3, ÷ 27		
1. Depth-12' below MLT 14' below MLT 16' below MLT	Present GIWW size Improve navigation Possible future GIWW	Minimum for navigation requirement Quantity of material	70¢/cy + 25¢/cy extra for booster pump station			
2. Bottom width-125' 150' to 175' 250' Other	Present GIWW size Improve safety Allow double tows	Minimum for present tows Possible safety problem	Quantity of material			
3. Side Slope-4:1 3:1 2:1 1:1	Stable slopes - low erosion Typical Texas channels Less quantity Least excavation	More material to be excavated High erosion Least stability; most erosion	Highest quantity of material High maintenance High maintenance	Soil tests may show that steeper slopes are permissible, or milder slopes may be required		

Figure 44

Alternative	Advantages	Disadvantages	Cost	Influencing Factors		References
D. Potential Excavation Materials				Distribution depends on local conditions; composition related to use as fill, canal water holding capacity, and side slope stability		
1. Consolidated	Stable banks. Use as compacted fill.	Difficult to dewater	See C-1			
2. Unconsolidated	Higher dredge production per hour. Rapid dewatering	Erosion	See C-1; might be lower unit cost			
E. Side Slope Stabilization						
1. Vary route through stable material	Least cost per mile	More miles; see also I.A. 6	Tradeoff between stabilization costs and additional excavation costs	Possible environmental conflict		
2. Shallow side-slope ratio	Low project cost	Wider ROW	Excavation quantity	More environmental conflict; Ref. C-3 (4:1)		
3. Vegetation stabilization	Low cost and stable	Maintaining healthy growth may be difficult	Lowest of 3-6; hydraulic seeding for large areas, including seed and fertilizer; .35/sy w/wood fiber mulch added, add .04/sy; large jobs may run $600-1500/acre			Godfrey, ed. 1975; Engineering News Record, 1976
4. Rip rap	Stability; wave absorption	Repair after storms	$20 to $50/cy; GIWW dimensions require 50 cy/ft, according to published data			Godfrey, ed. 1975
5. Concrete lining	Stability	Pore water pressure in clays can cause pop-out; wave reflection	$15-$25/cy; GIWW dimensions require 4 cy/ft.			
6. Fabric	Stability; wave absorption	Replacement frequency	Relatively expensive maintenance; plastic netting or polypropylene mesh stapled is $.55/sy			Godfrey, ed., 1975
7. Gabions	Stable banks, can be utilized to form steeper slopes	Wire may corrode in sea water; repairs needed after storms	Stone filled gabions, 18" deep are $19/sy			Godfrey, ed. 1975
F. Minimum Change in Surface Drainage						
1. Ridgeline route	Least change in drainage	Maximum depth of excavation, possibly excessive bends in channel	15% increase in cheapest part of project cost	See I-A-3		
2. Collection/Diversion into channel	Can direct into channel to promote flushing action	Cost of erosion control	Concrete @ $80/cy; may be able to stabilize drainage-ways w/vegetation, rip rap or other design to minimize costs	Environmental change		
3. Siphon Drainage Crossings	Maintain drainage regime	Cost-foundation problems	High. Concrete @ $150/cy; cost of CMP: 15" diam, 16 ga. = $9.10/LF 30" diam, 12 ga. = $32/LF 48" diam, 15 ga. = $42/LF	Environmental change; corrugated metal pipe prices don't include excavation, backfill, or support systems		Godfrey, ed. 1975
G. Canal Flushing						
1. Natural flushing						
a) Tide	Simplest system	Slow turnover time	Low cost	Must have inflow to maintain net seaward flux		
b) River	Fast turnover time	Flood protection, salinity control, sediment	Control structures and flood protection	Seasonal changes in river flow may have effect on availability and control structure design		
2. Mechanical systems						
a) Pumps	Degrees of control	Cost: capital and energy; maintenance	Pumps, pipe foundation; more expensive than gates			
b) Gates	Natural (tidal) energy for flushing	O & M; personnel	Structures, foundations	Tidal amplitude governs effectiveness		
H. Bulkhead and Dock Designs						
1. Concrete Bulkhead	Strength, Durability	Foundation requirements, permanence, low salvage value	$450/ft of length			USCE, Galveston, 1977
2. Steel Piling Bulkhead	Least construction time. High salvage value, can be modified easily	Subject to corrosion	$550/ft of length.			Godfrey, ed. 1975; 1977
3. Timber Piling Bulkhead	Good durability		$360 ft. of length	Specify retention for durability		USCE, Galveston, 1977
4. Docks Alternate designs (finger piers, cluster piles, etc.) are industry-specific.	Regular dock for dry bulk cargos. Cluster piles and finger piers for liquid bulk					

Engineering Alternatives (cont'd)

Alternative	Advantages	Disadvantages	Cost	Influencing Factors		References
II. Channel Excavation						
A. Type Equipment						
1. Dredge a) Cutterhead	Productivity of 27" dredge is near 1,000 cy/hr	Spoil control and areas; turbidity.	Repump or rehandle in hopper barges	Repump ahead to industrial site for fill; capacity = f(diameter); high turbidity generated; may cause environmental conflict near bay or GIWW		USCE, Galveston, 1977
b) Mechanical	Spoil control	Rehandling; low productivity	Additional handling			
c) Hydraulic	Productivity vs. cost	Limited to unconsolidated material				
2. Land Based a) Scraper	High production rate	Limited by water table	Haul distance; $1.15-2.00/cy range for 1,500 ft haul distance for wet terrain.	Weather		Godfrey, ed. 1975
b) Dragline	Water table not a factor	Relatively low productivity	Rehandling. Costs near $1/cy.			Godfrey, ed. 1975
c) Tower	Water table not a factor	Complexity and availability	High initial cost; foundation problems; rehandling. Costs near $1.60/cy			Godfrey, ed. 1975
B. Spoil Disposal				Anticipate maintenance dredging requirements		
1. Land a) Industrial Site	Fill to desirable elevation	Cost of rehandling, repump or haul	Control of water. $2,500/AF of fill material in place	Water quality; heavy clays are generally suitable for stable fills; sands may require containment by a stable dike; silts probably are not suitable for dike construction or elevated disposal areas		Herbich, John B. 1976
b) alongside channel	Low cost; can aid run-off control (See III-d); no hauling required	Larger ROW; waste of material		Environmental conflict and water quality, aesthetics; related to II-A-2		
2. Existing GIWW Disposal Sites	Initially; nearby location already committed for this purpose	Use up scarce sites and not use good resource	Low cost	Permission from USCE		
3. Open Gulf (II - C-1)	Provide beach nourishment. May create islands (in designated areas) for recreational land or for light industry	Cost and turbidity	Pumping distance or rehandling cost of hopper barges	Environmental conflict		Herbich, John B., 1976
C. Spoil Disposal Method						
1. Hopper Barge (Ref II-A-1)	Removal from work area. Function of capacity, quantity and distance traveled	Limited to open Gulf disposal	Rehandling	Environmental conflict		
2. Pipeline (Ref II-A-1-a & c)	High productivity; control of final location; function of size, length and pumping required	Turbidity at discharge	Lowest unit cost	Environmental quality control		
3. Truck (Ref II-A-2-b & c)	Locational control	Low Productivity; high cost	Haul distance; approx. $.65 to $1/cy or more			Godfrey, ed. 1975
D. Disposal Control and Dewatering						
1. No control	Least cost	Environmentally detrimental; turbidity, Water quality	§ 404 and TWQB don't allow			
2. Containment	Control of effluent	Levee cost	Embankment construction and compaction	Requirement of permit; consolidated material must be used; see II-B-1-a		
3. Drainage dewatering by natural processes	No labor/equipment cost	Time to end-condition	Low if time is not a major factor	Poor foundation; see II-B-1-a		
4. Compaction at site, other than Ind. site	Efficient time use of area-construction site fill.	Equipment and cost of handling	New technology			
5. Disposal at Industrial site (B-1-a))	Use as fill material	Cost of extra pumping	Extra pumps, pipe and labor	Energy cost		

Figure 44
Engineering Alternatives (cont'd)

Figure 44
Engineering Alternatives (cont'd)

Alternative	Advantages	Disadvantages	Cost	Influencing Factors		References
III. Industrial Site Area						
A. Foundations						
				All foundation types: foundation choice dependent on 1) nature of the superstructure and loads to be transmitted to the foundations, 2) subsurface conditions, 3) capability of alternatives to carry required loads w/o experiencing detrimental settlements and 4) compromise between performance and cost		Peck, Hanson & Thornburn, 1963
1. Naturally stable subsurface	Simplifies design, promotes safety	None	Simplest foundation design	Availability		
2. Excavate & backfill	Stable foundation	Placement of spoil	Borrow material and haul distance - include dewatering cost, compaction requirements	Care of water		
3. Slab on pilings	Load capability vs. cost		Estimated cost for pilings is $10-$15/CLF Additional cost for concrete and reinforcing			
4. Spread footings	Load capability	Cost	Concrete, steel, boring; in place including forms (4 used) and reinforcing steel is $86/cy; additional cost for floor slab			Godfrey, ed. 1975
5. Slab on grade	Best for light unit loads	Problems w/differential settling	Concrete, steel - $1.20/SF for 8" thick slab (not including forms or reinforcing)			Godfrey, ed. 1975
B. Water supply						
1. Surface water (river w/ or w/o reservoir)	Low energy cost of supply, in general, better quality than 3,4,5	Treatment requirements; quality may vary seasonally, necessitating modification in treatment process	Pumping to site; treatment, pump and pipeline, energy costs			
2. Well field	Low degree of treatment	Cost of wells, pumps and supply lines	$200,000/MGD well + conveyance costs - 8" well drilled and cased is $11/VLF 6" submersible pump (50-125 GPM) is $4000; add energy costs for pumping, pipeline	Consider aquifer capacity; danger of salt water intrusion; quality of water; contamination		Godfrey, ed. 1975; U.S. Army Coastal Engineering Research Center, 1966
3. Desalt	Up to distilled water	Very expensive	>$1.00/1,000 gal. estimate for electrodialysis and reverse osmosis systems	Quantity required; may be able to combine desalting operation w/geothermal energy recovery process; potential recovery of bromine, chlorine, magnesium and refined salt		De Longe & Guarino, 1975; Fair, Geyer and Okun, 1971
4. Salt water conversion	No supply limit	Special material and equipments required; high cost, energy requirements	Heat exchanger; conveyance pipelines and pumps, see 3 above	Discharge requirements; see above		
5. Reclaimed water	Low cost, suitable for many industry operations	May require special treatment process, chemical addition; quantity and quality may fluctuate; will need other drinking supply source	Pipeline from source; treatment requirements	Ultimate treatment requirements before disposal; TWQB permit		
C. Flood protection				Determine flooding potential from hurricane surge; use methods described by the U.S. Army, Reid and Bodine, Marinos and Woodward or GLO		U.S. Army Coastal Engineering Res. Center, 1966; Reid & Bodine, 1968; Marinos & Woodward, 1968
1. Natural elev. above flood plain	No construction cost incurred	Possible non-availability of other features	Land cost	Site availability		
2. Levee (Ref II-B-1)	Less cost than fill	Cost of construction	Compaction	Drainage system		
3. Fill to desired elevation	Control of degree of protection	High total cost	Haul distance, compaction	Availability of materials		
D. Runoff control						
1. Location to minimize sheet flow	Less construction cost incurred	Possible non-availability of other features	Land cost	Site availability		
2. Collection and Discharge						
a) to channel	Low environmental conflict. Aids flushing action. Good quality as long as flows do not receive point source effluents and erosion and sediment measures are in effect	Cost of appurtenances for slope protection	Drains; rip rap; slope grading	Water quality		
b) to local drainage	Maintain normal inflows	Possible treatment required	Drains; rip rap; slope grading	Water quality; can utilize any of several erosion and sediment control alternatives to maintain quality; these include chemical stabilizers, mulches, control structures, vegetation covers and other special practices		Environmental Protection Agency, 1972
3. Collection and Reuse	Low cost raw water collection, storage, and possibly treatments facilities are required	Reduce inflow to natural system. Undependable supply, seasonal variation	Pumps and conduit	Treatment requirements		

Alternative	Advantages	Disadvantages	Cost	Influencing Factors		References
E. Waste Disposal						
1. Solid wastes						
a) Land Fill	Simple system. Creates higher elev. land	Limits land use options to lighter foundation loadings	Land, equipment cost and operation	Impermeable soils required; water table; compacted density of waste is typically 800 #/cy; optimal life expectancy 15-20-50 years; cover material is needed of 4 parts of refuse to 1 part cover soil; TWQB regulates industrial solid waste; Texas Dept. Health Resources regulates municipal wastes		Pavoine, Heer & Hagerty, 1974
b) Incineration	Requires little land. Possible energy recovery reduces weight and volume	Air quality control cost; large capital cost and operational expenses; air and water pollution	Incinerator $10-$15/ton for municipal installation; cost may vary w/industrial waste; volumes of air pollutants, control requirements	TACB permit		EPA, 1976
c) Recycling	Maximum use of resources, resource recovery, possible economic return	Reduction to local inflows; expense of systems; markets for products	Additional labor and equipment for selection of recyclables	Local use or export? Shipping rates		
2. Liquid Waste Disposal a) Secondary Treatment	Lowest cost. Possible for use in irrigation but use as irrigation water unlikely for most crops in the coastal region given typical water quality requirements	Discharge options limited	Capital $ cost = 35.6 x GPD 0.75. See Also data from Godfrey	TWQB permit		Godfrey, ed. 1976
b) Tertiary Treatment	Option to reuse or discharge to local drainage	High treatment cost	See III-B-3, costs should be similar	Land availability		
c) Reuse	Maximum use of resource	Total unit cost may be uncompetitive	Special treatment	See a & b above		
d) Discharge into channel	Least local environmental conflict. Aid to flushing	Possible water quality problem Spills	Secondary treatment or better	TWQB permit; quality, requirement may be such that advanced treatment is recommended; degree of treatment dependent on quality of effluent, industrial use		
e) Discharge into local drainage	Maintain inflow quantity	Probable tertiary treatment requirements. Spills are high risk; may require expensive treatment or other safeguards	Tertiary treatment is probable requirement	TWQB and § 404		
f) Injection Wells	Least treatment; TWQB requires poorer quality receiver than injected material	High cost; danger of contamination of fresh water supplies	Deep well and high pressure pumps; may require pre-treatment to prevent clogging, maintenance	Suitable geologic formation required		
IV. Relocations						
A. Pipelines - Lower On Bridges	No overhead clearance problem. Favorable construction conditions	Relower if project deepened; possible extensive rerouting	Anti-flotation and/or extra strength pipe	Cost of new line minus salvage value; bridge availability; safety		
B. Highways - High Bridge Swing Bridge Tunnel Other	Permanent clearance to some limit; Low cost: No clearance limit	High Cost Bottleneck - limit to length Extremely high cost	$40/ft^2 to $50/ft^2 O&M Caissons; soil types	Subsidence problem potential Traffic load; safety Subsidence		TDH&PT, 1977
C. Railroads - High Bridge Swing Bridge Lift Bridge Tunnel	Permanent clearance to some limit; No change in approach elevation; No change in approach elevation; No clearance limit	Maximum grade of 1% Traffic bottleneck; water elevation Traffic bottleneck; water elevation Maximum grade 1%; extremely high cost	Rail, ties, fill; $50/ft plus structure O&M O&M; foundations Caissons; soil type	Subsidence problem potential Water table; subsidence		
D. Homes, cemeteries, or other features						
1. Relocate	Maintain public relations; allows optimum route; less cost than for reroute	High cost	$4-$6/SF for buildings	Public sentiment		Godfrey, ed. 1976
2. Reroute around	Best public relations	Higher cost; see also I-A	Length, excavation, haul distance			

Figure 44
Engineering Alternatives (cont'd)

With additional dredging, access to an inland development site could be provided via linkage to existing navigation channels which cross all Texas bays except Baffin Bay and Copano Bay. Because many bays have headlands at elevations above hurricane surge tide, excavation through this high ground to the proposed development site would mean a maximum depth of channel excavation and concomitant spoil disposal problem. Use of those bays with shorelines at low elevation and relatively flat slopes into the uplands could require a fairly long approach channel to reach a site above hurricane flooding. Dredged material disposal problems in this instance would stem from the frequency of maintenance dredging required as well as the lengthy pumping to acceptable disposal sites.

An advantage of a direct cut from the GIWW to a nearby upland site of marginal elevation would be the availability of the excavated material for fill at the industrial site and protective levee construction. Routing along a local drainage divide would minimize interruption of natural drainage because local runoff naturally would flow away from the channel. This would minimize the maintenance dredging required and lessen the problems of land acquisition for maintenance material disposal sites. The difference in elevation between a wetlands area and a local drainage divide may be less than five feet. The additional expense of excavation of the "high ground" would in part be offset by lessened sedimentation of the channel. Significant cost factors of this alternative would include pumping dredged material forward to the development site, dewatering the material, and compaction to an appropriate density.

Channel and Port Geometry. The geometry of the canal will affect such factors as project cost, water quality in the channel and port area, and the amount of land available for industrial development and waterfront. The decision is constrained, in part, by geological substrates, ecosystem requirements, and land availability and access.

Principal shapes or layouts for the canal system considered are: "U"-shaped; "I"-shaped, "L"-, "T", or "Y"-shaped; crescent shaped; and lastly a system associated with a river, although not using the river for navigation (see Figure 44). These concepts are amplified below.

U-shaped System. According to McFarland, et al. (1976), this concept is advantageous in areas with suitable substrates near the coastline and where the land slopes fairly steeply upward from the coast. Each end of the "U" would each provide navigation access, with the proximity to the coast promoting flushing of the canal by wind and tidal action.

However, for maximum land area utilization, this shape requires part of the industrial development to be on the island inside the U. Thus, the cost of bridging for rail and highway access is added, as well as extra costs in providing utilities.

I-shaped System. This layout would be a straight channel cut inland to an appropriate area for industrial development. The harbor would be a widened extension of the channel. The lack of turns would aid navigation, particularly if the orientation were parallel to prevailing winds.

The primary disadvantage of this shape would be in maintaining water quality in the harbor and channel. Stagnation might be overcome by the use of treated wastewater as flushing water or by diversion from a nearby stream of adequate volume of flow, as discussed below.

L-, Y-, or T-shaped System. These shapes might be used to accommodate a linear, physical constraint parallel to the shoreline, such as a developed area or a major highway, rail and pipeline corridor. An advantage of this design is a maximization of canal frontage for development relative to approach channel length. The major disadvantage would be maintenance of adequate water quality in the upper reaches of the harbor.

Crescent-shaped System. Constraints on corridor routing or site layout imposed by critical ecosystems or by geologic features (e.g.: drainage divides) may preclude straight-line development of a channel or harbor. These features may be avoided with a crescent shaped channel, although these are limits such as minimum curve radius imposed by navigation requirements.

River-associated System. Regardless of the plan-view configuration or geometry of the channel, satisfactory water quality will be difficult to maintain without some design for flushing. Unless a net seaward flux of flow is maintained, the water in the channel could become stagnant. Coupled with evaporation, the concentration of conservative materials may continue to increase. Tidal action may provide mixing, but the materials may remain in the harbor area until periods of high rainfall are experienced, or until flushing is provided. If the harbor area is located in proximity to a major stream, sufficient water might be diverted to the project to provide flushing. Diversion from a low-head, small-volume demand reservoir might also be used to encourage circulation in the channel. Appropriately designed diversion could minimize any sedimentation within the harbor, thus assuring low maintenance dredging requirements.

Project Dimensions

Entrance Channel. Given that a barge canal would be tributary to the GIWW, the dimension of the GIWW (-12' mean low tide (mlt), 125' bottom width) control those of the project. That is, the project may have lesser dimensions and possibly meet the industrial navigation requirements, but no benefits accrue from any depth dimension greater than that of the GIWW.

A study by the U.S. Army Corps of Engineers on enlargement of the GIWW, begun in 1976, is scheduled for completion near 1986. In the event that the GIWW is enlarged, tributary channels could then be enlarged as deemed appropriate by local interests. Project design should call for corridor right-of-way dimensions to allow enlargement.

McFarland, et al. (1976) point out that the design depth of a barge canal should be at least two feet greater than the barge's design draft. In a confined channel, a vessel underway will draw more water than when at rest. This phenomenon, known as "squat," adds approximately one foot of draft for the typical barge tow at six knots on the GIWW. Because most barges used on the Texas coast are designed for nine to 11 feet of draft, the 12 foot depth of the GIWW appears to be appropriate for a tributary project.

The bottom width of the channel is a function of barge width and minimum safe passage clearance of at least two barge tows. Empirical formulas can be applied to calculate desirable bottom widths and to determine potential casualty rates for various dimensions. The GIWW design is suitable for barges of 35-foot width; standard barge dimensions now in use are commonly between 26 and 35 foot widths. Widths up to 54 feet are also being used.

Side slopes of the channel are site specific, controlled by substrate characteristics. They are also affected by erosion resulting from both natural processes and boat wakes. A sideslope ratio of three horizontal to one vertical (3:1) is common practice along the Texas coast. Material of low stability would require flatter slopes. The revised Victoria barge channel project design indicates a 3:1 side slope for the channel cut, with slopes as flat as 6:1 for the slopes of the drainage protection levees (USCE, 1957).

Design philosophy for the California Aqueduct, one of the major water conveyance projects in the world, called for excavation on a minimum safe sideslope along the entire state portion of the project. Some failure was expected to necessitate reexcavation to some flatter slope. In practice, there were fewer slope failures than expected. Project costs were minimized in that the least possible excavation was done, and the minimum amount of field

testing and slope stability analysis was required. This design philosophy could be applied to an inland canal project if the entrance channel was of a significant length.

Harbor. The depth of the harbor should not differ from the depth of the entrance channel. The width of the harbor will depend in a large part on the traffic load and requirements for safe maneuvering of barge tows during passing, docking, and turning.

Typical canal designs provide a turning basin at the end of the navigation channel with industries locating along the channel. Barge turning within the canal requires maneuvering room provided at the waterfront. Harbors for barge traffic have minimum widths of roughly 350'-400', with barges docked on both sides of the channel (USCE, 1974). Vessel yaw is limited to approximately five degrees by these dimensions.

Side slopes along the harbor would depend on the degree of development of docks and bulkheading. Undeveloped areas would be sloped appropriately for local substrate and drainage conditions.

Potential Excavation Materials. Substrates along the Texas coast commonly fall into three physical properties groups (as defined by the Bureau of Economic Geology). Clays and muds, clayey sands and silts, and sands account for 80 to 95 percent of the substrates encountered in any one area.

Spatial distribution of the substrates is determined by the historic pattern of depositional processes. The more homogeneous sands deposited under shoreface conditions are linear bodies, two to five miles in width, paralleling the coast. Clayey sands and silts resulting from fluvial processes typically are "fingers" perpendicular to the coast. In many areas these silty deposits represent levees bordering abandoned channels and now stand in positive topographic relief above surrounding marshes and coastal lowlands. Finally, clay and mud substrates occur over broad areas between the silty sand "fingers," and represent low-energy, interdistributary environments.

In general, these substrates are unconsolidated. Exceptions may be found in clay and mud substrates along the southern Texas coast. In this drier area, the clays tend to have dewatered and to have become cemented and hard.

The three general substrate types present few excavation problems. Their excavatibility is much higher than that of substrates farther inland, for example, in Central Texas where blasting is often required. Clays and muds may present more difficulties; either by hardness when dry or by stickiness when wet.

Substrate properties affect project aspects other than excavatibility. Clayey material allows a steeper canal side slope than does sandy material. A firm clay substrate erodes more slowly under wave action than does loose silty sand. Clay substrates also have higher water-holding capacity and lower internal drainage than silty sands. Silty sand side slopes may require internal drains if concrete paving is used for side slope stabilization. The higher permeability of silty sand side slopes may allow saline canal water to percolate through the canal flanks into the adjoining areas.

Material dredged from the canal may be used as levee and fill at the industrial site. Earthen hurricane protection levees should possess low permeability, moderate shear strength, and moderate compressibility—clayey silts possess these characteristics. However, fill material to support industrial plants needs to have the high load bearing strength, low shrink-swell potential, and good drainage characteristics of coarser material.

In summary, clayey substrates allow steeper canal side slopes, are less erodible, present fewer internal drainage problems in the canal flanks, and as dredged material are useful in building levees around the industrial site. The sandier substrates may be easier to excavate, and are useful for filling and raising the elevation of the industrial site.

Side Slope Stabilization. In order to reduce erosion of the banks of the channel and harbor, some slope protection measures will be necessary. Cost effectiveness will control the choice of material, as the primary tradeoff is between channel dredging maintenance over a period of years versus the one-time capital investment in slope protection. Available alternatives range from vegetation to stone rip-rap.

Vegetation generally has not proved to be satisfactory when exposed to wave (wake) action in tidal waters. At low tide, the wave energy is expended on exposed soil in and below the root zone, eroding the soil. Vegetation is useful in stabilizing areas above the wave zone, such as a channel berm or levee. The cost of vegetating the side slopes depends on project size. Prices may be expected to range from $600 to $1,700 per acre.

Sprayed-on concrete, known as gunite, is an effective means of slope protection. It is in the midrange of expense of permanent stabilization materials, estimated at approximately $1.25 per square foot ($54,450 per acre). Care must be taken in control of its application to provide adequate underdrainage. Development of excessive porewater pressures in underlying clay material can exceed the strength of the gunite, causing section to fail. The ensuing erosion behind the remaining material can lead to total failure of the surface. Provision of weepholes and drains with a follow-on inspection/maintenance program can ensure its effectiveness.

Stone rip-rap, while expensive, is a relatively maintenance-free method of protecting slopes against wave action. The stone ranges from just under a cubic foot to derrick stone weighing several tons, and is applied over a course base of well-graded large gravel to cobble-sized material. Handling and transportation costs have escalated the price to $25-$30 per cubic yard in place, and higher for placement from water borne equipment.

In recent decades an alternative known as soil cement has been used. Soil cement is essentially a weak concrete commonly near 1,500 psi in compressive strength. It is usually composed of three sacks of cement per cubic yard, plus locally available sandy material. It has a stair-step appearance upon completion when placed in six- or eight-inch thick courses approximately eight feet wide. Like gunite, some form of underdrainage must be provided. The advantages of soil cement as an inexpensive alternative to stone rip-rap are reduced by the increasing cost of cement.

Depending on the type of substrate encountered, design of the canal cross-section may ensure a stable side slope. Wave energy would be expended over a larger area if a gentle slope or berm is provided extending from just below low water elevation. Vegetation on this berm could pervent or significantly reduce erosion. The viability of this option is a tradoff between initial construction cost and slope/channel maintenance costs.

Any slope protection design must consider the degree of exposure to tropical storm wave action. What may suffice for normal conditions might result in an expensive reconstruction problem after exposure to storm wave action. On the other hand, the initial cost of meeting the demands of a storm wave situation may be prohibitively expensive. It is expected that the maximum exposure (and required protection) would be at the juncture with the GIWW.

Surface Drainage. A channel route which follows a ridgeline of the local drainage pattern is desirable for two reasons: 1) sedimentation into the canal is minimized, and 2) water, sediment, and nutrient flows into local wetland areas are maintained.

Safe and efficient navigation, however, requires a channel as straight as possible and drainage divides may have more curvature than is desirable. Thus, it is expected that some side-hill excavation would be necessary. Levees on the uphill side of the channel will prevent surface runoff and sediments from entering the channel. This may be detrimental, however, if runoff flows to areas downhill of the channel are cut off. Local runoff can be siphoned to the downhill side of the channel with culvert pipes under the channel. Pumps can be added to supplement the flows if necessary. The risk of sediment filling and blocking the pipes would be a major design problem.

While the collection-culvert system could maintain the quantity of flow across the canal, the local drainage pattern would likely change from sheet-flow to point discharge. There would also be a lessening of sediment availability downslope from the channel. The area between the discharge points would dry out to some extent. The magnitude of this effect would be a function of both slope and drainage area.

Flushing Systems and Water Quality. Water quality problems in closed channels are the result of two factors: poor water circulation, and polluted discharges or runoff. These two factors are related. That is, the tolerance or carrying capacity of the receiving waters to assimilate inflows will be a function of the flushing rate.

Several alternatives to maintaining water quality are available, depending on the channel and harbor design. One solution is the use of waste treatment effluent of sufficient quality and quantity to flush the harbor and channel. Water withdrawal from the channel for industrial use also encourages circulation. This process has been notably successful in the Brownsville Ship Channel.

As mentioned previously, a U-shaped channel system may have a reasonable degree of flushing as promoted by the action of wind and tide. If the site is in proximity to the GIWW or a bay, water might be pumped to the harbor without excessive cost. Other layouts might allow diversion from a major stream or river. The magnitude of cost of a diversion system for flushing will depend primarily on distance and on whether the diversion must be pumped or it can be conveyed by a gravity-flow canal. In any event, the environmental ramifications of such a diversion must be considered, both at the water source and the receiving basin. If the importation of flushing water can be part of a conveyance system for process and/or cooling water, the unit costs may be reduced.

Bulkheads and Docks. Needs for bulkheads and docks will be site and industry specific. Dock mounted pumps may load or unload bulk barges tied off of cluster piles located alongside the channel, whereas the unloading dry cargo would require a bulkhead and dock facility with a crane to handle the material.

Bulkhead construction materials include timber, sheet steel or concrete piles. Current cost estimates are approximately $350 per linear foot for timber, and $600 for steel, based on 45-foot length. Timber docks (12"x12") are estimated at $20 per square foot in place.

Channel and Harbor Excavation

Excavation Methods and Equipment Types. The choice of equipment for construction of the channel and harbor will depend on such factors as soil characteristics, depth to water table, and terrain and elevation. Excavation methods are generally categorized as dredging (water-based or floating equipment) or land-based. Land-based equipment such as bulldozers and scrapers are generally used to the maximum extent practicable. The dry, excavated material may be used for levees, road bed, or general site fill. Virgin dredged material is often suitable for fill, although it may require dewatering and compaction.

Cutterhead Pipeline Dredge. Accoring to Herbich (1975), the cutterhead dredge type is the most versatile and functions efficiently in both alluvial materials and compacted deposits such as clay and hardpan. A 30-inch dredge with a 5,000 to 8,000 horsepower pump and 2,000 horsepower cutter can pump 2,000 to 4,500 cubic yards per hour (cy/hr) through pipeline lengths up to 15,000 feet. The dredged material is conveyed in a water slurry which is about 15 to 30 percent solids by weight (McFarland, et al., 1976).

Larger dredges contain on-board living quarters, galley, and equipment repair facilities. They generally operate 24 hours a day with a crew numbering approximately 80 persons.

Smaller dredges, mostly of the 8 to 20 inch size, are also designed as portable systems. They are built as modular units which can be moved over land, and are assembled at the job site for operation. These smaller dredges also operate 24 hours a day. Crew size ranges between 40 and 60 persons. Typical production rates are from 150-400 cy/hr for a 12 foot dredge to 400-1700 cy/hr for a 24 inch unit.

The primary environmental constraints on the operation of a hydraulic dredge relate primarily to the effects of turbidity at the cutterhead and at the discharge point; the quality of effluent water from the disposal areas; and the effects of the fill material in the disposal area.

Turbidity at the cutterhead can be controlled by a cone-shaped shroud around the suction tube near the intake. Turbidity control curtains have also been successfully employed.

The location of disposal areas in less critical environments, and the construction of dredged material containment levees can help alleviate the problems associated with spoil disposal although the added expense of additional discharge pipe, right-of-way, and booster pump stations can cause a significant increase in project cost. Bids received in early 1977 by the Galveston District, USCE, indicate the cost of open water disposal of maintenance material at $0.24/cy; disposal in containment areas at $0.49/cy; and new work including construction of containment levees at $1.11/cy (USCE, 1977). Projects with exceptionally long pumping distances have cost near $4.50/cy (Espey, Huston & Associates, 1977).

Mechanical Dredges. Mechanical dredges are similar in design to land-based excavating equipment. As with the hydraulic dredge, they are limited in the distance that dredged material can be transported without rehandling. Examples of mechanical dredges are the grapple dredge, consisting of a barge-mounted derrick which is equipped with a clamshell bucket; the dipper dredge, similar to the land-based hydraulic excavator; and the bucket-ladder dredge, with an endless chain of buckets which discharge into a barge's hopper or onboard bay. Also included in this category is the barge-mounted dragline.

Since the dredged material transport limit for a mechanical dredge is generally under 100 feet, material not disposed of at the site must be hauled by truck or barge. This secondary handling is quite costly. Thus, the best use of this type of dredging equipment is on smaller projects where economics do not justify the move in and set up cost of a hydraulic dredge. Advantages of the mechanical dredge over the hydraulic dredge include its ability to operate in shallower water, and the excavated material is not a slurry requiring dewatering.

Land-based Equipment. A wide range of types of land-based excavating equipment (tracks, wheel, buckets, blades and pans) is available. The type of equipment used is tailored to size of the job and type of material to be excavated.

For large earthwork projects with haul distances limited to a mile or two, the scraper offers high productivity at reasonable cost. Specific equipment needs will vary with soil characteristics, haul road slopes, and haul distance. However, a typical fleet might include five 20- to 30-cubic yard scrapers and a bulldozer to assist loading. For a one-mile haul, production would average near 800 cubic yards per hour in alluvial material.

Tracked and wheeled excavators are used to move smaller amounts of material. The capacity of this equipment, which works in conjunction with a fleet of dump trucks, averages 4 cubic yards.

For excavation below water surface, but operating from the land, hydraulic exca-

vators and draglines can be used. The hydraulic excavator has a bucket attached to a hydraulically controlled boom, while the dragline bucket is attached to a cable at the end of a crane boom. Production rates are approximately 300 cubic yards per hour.

The elevation of terrain and depth to water table may be such that a combination of land-based and dredged equipment is used. A dredge can excavate material above water level by undercutting the earth in front of the dredge. This approach is less efficient than land-based excavation and causes saturation of otherwise consolidated earth. Alternatively, land based equipment may excavate earth down to the water table, at which depth the heavy land equipment is removed, and the dredging equipment is installed.

Disposal of Excavated Material. Although the creation of an industrial site is considered a suitable use for dredged material, the length of a channel and elevation of the route may be such that use of all the excavated material as site fill is not feasible. The disposal of this material must take place at a location and in a manner which minimizes adverse environmental impacts, and with monitoring and control of the disposal operation. Alternative disposal sites are in open water, at existing GIWW maintenance dredging disposal sites, and new onshore disposal sites.

Open Water Disposal. Open water disposal sites may be located in Coastal bays or in the open Gulf. It can be assumed that most inland canal sites will be sufficiently distant from a suitable open bay disposal site as to preclude hydraulic pumping of the soil by pipeline. Therefore, open water disposal would require loading the excavated material on a transshipment barge, travel to the disposal site, and the discharge of the spoil from the barge. The method of loading the barge, depending on the excavation or dredging procedure, would be either by pipeline from a hydraulic dredge, or by mechanical methods.

The open bay disposal site is sometimes prepared with containment levees. The levees may be constructed by drag-line excavation of the site, with the bottom material piled in the chosen configuration. Virgin material from the canal excavation may be barged to the site to form the levees. While such containment may reduce the spreading of turbidity of the discharge, the levees themselves are subject to current and wave erosion.

The transported material is discharged into a confined or unconfined open bay area, or at sea, by the same standard procedure. The hopper barge bottom opens, much like a railroad grain or coal car, and the material is discharged into the water.

Constraints on open water disposal include floral and faunal sensitivity to turbidity, reduction in bay bottom habitat, and the effect on water movement patterns. With proper design the open bay disposal can create emergent islands which, when vegetated, provide increased local habitat diversity.

Existing GIWW Sites. There are a number of dredged material disposal sites along the GIWW which have been approved by regulatory agencies. The disposal sites are on either side of the GIWW. The sites gulfward of the GIWW preclude, of course, trucking of the disposal. Piped disposal would be effective depending on the distance from the inland canal excavation to the existing disposal site.

These sites, however, are limited in their capacity to contain excavation material beyond their designed volume. Furthermore, the disposal sites which have been approved for maintenance spoil should be conserved, because spoil from channels serving industrial plants and traffic is often contaminated with toxic constituents. Virgin dredged material is not normally contaminated. New disposal sites for virgin material might be more easily located than new sites for maintenance spoil.

New Onland Disposal. The dry material excavated by land based equipment will be

of more immediate use for levee or site-fill material because it does not require compaction and dewatering.

Material dredged from below the water table perhaps would be in surplus, or, if needed for site fill, would require compaction and dewatering. The wet dredged material to be placed in new onland disposal sites can be piped in slurry form into containment levees. The high proportion of water in the material requires that the constructed volume of the containment areas be greater than the original volume of dredged material *in situ*. The expanded volume of the slurry is calculated from a "bulking factor." The bulking factor may range from unity for sand to two for silt or clay (McFarland, et al., 1976). In addition, a water quality control method is required for outflowing slurry water. Various sediment control methods include filters, vegetation, and channelizations. Generally, more polluted sediments require a longer period of water retention and thus more volume in the disposal area (McFarland, et al., 1976). The drainage rate of the water can be easily controlled by a weir gate at the discharge point.

The material for which use as fill at the industrial development site is feasible must be placed in a manner which allows expeditious dewatering and compaction. The development area must be compartmented by levees constructed of material excavated by land based equipment. The compartment sizing should be such that a rotating sequence of use would provide enough time interval for dewatering and compaction prior to the next placement of dredged material. While one part of the compartment is dewatering, another may be filling. Under natural conditions, sand and gravel drain almost immediately, silts drain more slowly, and clays are very slow to consolidate. Dewatering can be accelerated with disc-harrowing (scarification) to increase exposure of the material to air. The material can be compacted with a sheepsfoot roller. This technique may be used if the slurry is not more than a foot in depth during the operation. The net accumulation of clayey material may be limited to 2 or 3 feet of compacted depth, beyond which dewatering time dramatically increases. Success of the compaction process will also be dependent upon rainfall.

The location of an upland disposal site for material not used as industrial site-fill should avoid natural drainage channels. The largest available area nearest to the dredge operation with least environmental conflict should be selected. Marshes and lowlands should be avoided. Finally, it should be noted that material placed in the spoil areas need not be mechanically dewatered and compacted on the same schedule as industrial site disposal, although some amount may be favorable to successful revegetation of the disposal area.

Industrial Site Area

The design application of an industrial site selection process, which incorporates an analysis of the capability and suitability of the land to accommodate use, will serve to minimize conflict with systems or natural environments unfavorable for development. Environmental engineering alternatives are employed as a means of responding to marginal site characteristics or design requirements that may exist even in the most tolerant and intrinsically suitable location. They are discussed here in terms of five design criteria: foundations, water supply, flood protection, runoff control, and waste management.

Foundations and Substrates. Foundation conditions in substrates along the Texas Gulf Coast present a range of potential problems for industrial construction. Notable are the low shear and bearing strength, high water holding capacity, and high shrink-swell potential characteristics of coastal clays.

A more naturally stable foundation material is sand or sandy clay. The improved drainage characteristics of these substrates avoid the saturation that constrain the use of clays.

The choice among alternative designs to accommodate substrate limitations must be predicated on detailed, site specific information. Core-boring data, soil mechanics analysis, and an understanding of the property and behavior of substrates can provide design information to avert such problems as differential settlement, corrosion, piping failures, and poor drainage. These factors are particularly critical in the design of structures, roadbeds, embankments, and water retention ponds.

Foundation Treatment. The type of foundation design employed depends on the type of constraint encountered as a function of both the substrate and loading to be imposed. The slab foundation on grade is a relatively stable and simple foundation design. This design, commonly used in housing foundations, spreads the structural loading to a low unit stress on the underlying material. Bending of the foundation will occur, however, if located where the moisture content of the subgrade is variable and the material changes volume with changing moisture content, as is typical of clays. Typical effects of this instability on the structure are jamming of doors and windows, fracture of the slab and cracking of the walls. Instability can be overcome by excavation of the poor quality material and replacing it with a compacted, stable material such as sand, sandy clay, or shell. These free draining materials prevent the buildup of differential pore pressures against the slab. The method may be practical only for smaller structures due to the costs of excavation, fill material acquisition and handling, drainage treatment, and subgrade compaction.

Piling may be required for more severe substrate instability under particularly high unit stress loadings. Depending on local stratigraphy and substrate, pilings provide support through friction between the piling and soil, and/or columnar support when driven to a firm subsurface. As previously described, piling material may be wood, steel or concrete, as determined by loading requirements and relative cost and durability factors.

Spread footing foundations may be required when a severe structural loading is placed on an unstable substrate, particularly where the structure is concentrated in a small area. This method requires a drilled shaft, underreamed at the bottom to a conic section, in which reinforcement steel and concrete are placed. Bearing area of the spread footing increases as the square of the footing base (conic section) diameter. These footings cost approximately $80 to $90 per cubic yard, in place.

Water Supply. The need for large volumes of water of good quality is a principal location factor and a major operating cost for many industries. The capital requirements for a suitable water supply may range from installation of local well fields to construction of distant dams and reservoirs. Operational costs such as the energy input for pumping is also a consideration. The availability and relative costs of various water sources are factors which can strongly influence plant design as well as location.

Surface Water. There is a close correlation of river flow with average annual rainfall in Texas, that is, there is a decreasing availability of fresh water from northeast to southwest. Recent data indicate a present surplus of water in the Sabine River Basin, adequate supplies in the Guadalupe Basin, marginal supplies in the Nueces River, and shortfall south of Corpus Christi. The Rio Grande is wholly allocated to existing users; any new water demand would require the purchase and conversion of existing water rights. Basins with a surplus-to-adequate supply may be expected to decline in the upper coast with increased upstream use and recurrence of historical low rainfall sequences.

Surface water treatment requirements vary between different streams. Generally, filtration, precipitation of dissolved constituents, and control of biological toxicants are sufficient to meet industry quality requirements. The range of operating costs for surface water supply typical to new plant construction is estimated to be from 10 to 15 cents per thousand gallons.

Groundwater. On the upper Texas Gulf Coast, industries have historically developed groundwater well fields more extensively than surface water sources. High-quality water has been available at or near the plants at relatively low cost, and in many instances only a minor degree of treatment has been required. This has resulted in withdrawal rates which have lowered water tables by 90 to 370 feet in the last 34 years (Sandeen and Wesselman, 1973). Intrusion of brackish or salt water into the aquifers and subsidence of the land surface have been associated results. Land subsidence has become severe in many places in Harris County, and is dramatically evident at Baytown. The land has subsided up to 8 feet near the Houston Ship Channel, with lesser amounts to the south. In Brazoria County (Brazosport Area), two feet of subsidence has been reported.

The effect on subsidence of groundwater withdrawal may be reduced if wells are properly spaced and sized for a reasonable correlation with aquifer recharge rates.

Wells of over 1 MGD capacity are fairly common in fresh water aquifers of the upper coastal counties, and wells of approximately 5 MDG have been developed in brackish water. An estimated installed cost of a developed well of 1 MGD capacity is approximately $100,000.

Desalination. With current technology, maximum practical desalination capability is approximately 10 MGD. The costs of the product water (at least $1.00/1000 gallons) make desalination a questionable alternative for most industries, particularly when considered in conjunction with the cost of disposal of concentrated effluent brines. Brine disposal on land presents potential problems with water contamination. Disposal in bay waters often creates local hypersalinity, and the costs of transport for disposal in the Gulf is generally prohibitive.

Desalination may be a feasible alternative if excess heat to drive the process is available from other industry operations and if the recovery of magnesium or other elements from the brine is cost effective. If the efficient development of geothermal or geopressured energy resources were realized, an integrated energy/industrial process/desalination system might be cost competitive.

Salt Water. The reduction in availability of unallocated surface water, the escalating costs of developing and transporting new fresh water supplies and the problems related to groundwater development has led industry to more extensive use of marine waters, particularly for cooling purposes. Salt water for industrial cooling is a relatively common practice on the Texas coast, particularly for major electric utility generating plants. This alternative is especially attractive to plants located along an industrial navigation channel where there is a relatively inexpensive, short length of intake conduit. For cooling water discharge, flow may be through evaporation ponds to lower the water temperature prior to release to the channel, bay, river, or Gulf. If cooling water is both drawn from and discharged to a navigation channel, the discharge point must be isolated from the intake point and the volume of the receiving waters should be greater than that of the discharge to avoid heat build-up over time. An additional benefit from cooling water withdrawal in the navigation channel would be the promotion of flushing action. The efficacy of the system would depend on the volume of water withdrawn. This process would add to the requirement of maintaining water quality in the channel, and of containing and removing accidental spills.

Recycling. The costs of recycling treated wastewater for industry must be weighed against the purchase, conveyance, and treatment costs of the primary water supply. The use of treated municipal wastewater by industries has proven successful, particularly in areas of limited water supply. Reuse may also be a suitable alternative if available water supplies are of poor quality, requiring costly treatment. Water recycling, as with other water treatment alternatives, may be particularly suited to an industrial complex because of industry interrelationships which would allow use of a common, integrated facility.

Flood Protection. Most coastal lands are vulnerable to flooding from hurricane surge-tides, high intensity local rainfall runoff, and river flooding along low gradient coastal reaches. The 100-year hurricane surge flooding height (typical design storm) along the Texas coast is approximately 10 feet at Brownsville, 15 feet between Port Isabel and Corpus Christi, 11 feet at Port Aransas, 13 feet at Freeport, and near 20 feet at Port Arthur (Texas Coastal Marine Council, 1976). One of the more severe hurricanes to recently strike the Texas coast was Carla (1961), which had a maximum surge flooding height of 22 feet above mean sea level at Port Lavaca.

River flooding may follow post-hurricane intense rainfall in coastal watersheds and heavy rainfalls farther inland, although the effect of the latter is regulated by flood control dams. The extent of river flooding depends on the size of the watershed, amount of recent rainfall, height of natural levees, stream gradient, width of floodplain, and the extent of erosion control along stream banks.

An inland industrial site has two strategies for avoiding either type of major flooding: either build at an elevation above flood influence, or to construct flood protection levees. A combination of the two approaches may be the best alternative, with a calculated tradeoff between the cost of channel length to an upland elevation and the cost of higher levees for flood protection at lower elevations.

The distance (perpendicular to the coast) inland to an elevation above hurricane surge flooding is 17 miles at Brownsville, between 6 and 10 miles along the reach from Port Isabel to Corpus Christi, 8 to 10 miles at Freeport, and 15 to 20 miles at Port Arthur as measured inland from Sabine Lake. The headlands of most Texas bays are commonly at elevations above typical storm design surge height and face the bay with cliffs or bluffs. The western end of Corpus Christi Bay and Lavaca Bay are typical examples.

Examples of industrial areas which are protected by a levee system include Texas City, the Freeport-Dow Complex area, and Port Arthur. Levees are generally constructed of compacted earthfill with a side slope of 2:1 or 3:1, stabilized by vegetation.

Control of Runoff. Drainage control involves the collection and diversion of surface runoff, both within and adjacent to the site. The design of a drainage system incorporates considerations of potential flooding, erosion control, and the management of accidental spills and leaks. Water quality in the harbor and channel is protected by avoiding uncontrolled runoff and toxic materials discharges from the industrial site and adjacent area. Finally, drainage control includes the management of runoff on the site to avoid accentuated flooding conditions on adjacent property.

The basic design of a site drainage control system channels runoff away from developed areas and roadways to retention ponds to allow control of the volume and rate of discharge, settling of sediments and treatment of toxic materials. Drainage ditches and control levees immediately surrounding the industrial plants, storage areas and parking lots should control flow away from the harbor area to a waste treatment complex. Vegetative planting in exposed site areas assists in reducing soil loss, sediment accumulation in control structures, and reduces the velocity of runoff.

The discharge point for stormwater runoff will depend on the water quality of the effluent and receiving waters and the nature of surrounding lands. Flows which are free of sediment and toxic material can be routed from on-site retention ponds to off-site local drainage or to the harbor. Discharge of runoff into the harbor may assist water circulation and encourage flushing; however, the return of runoff to a local drainage may be required to maintain the fresh water inflow requirements in coastal wetlands.

The cost feasibility of internal use of runoff water in lieu of water conveyed from off-site also should be investigated. Possible negative factors include low frequency and small quantity in this supply, and relatively large areal requirements for a useful retention pond.

Waste Disposal. Alternative waste control practices applicable to this study are concerned with the organization of a waste management program which minimizes the cost of handling and treatment, maximizes environmental compatibility and allows for innovative reuse of material where practical. Critical options are the degree of treatment required and design of the effluent discharge.

Solid Waste. Solid wastes are commonly disposed of in landfills. A proper landfill operation consists of an excavation wherein the wastes are repeatedly placed, compacted, and covered by a layer of the excavated material. After final backfill and grading, the site is available for use to other purposes. General design parameters provide that the base of the excavation be an impervious material (to avoid groundwater contamination), that the waste be compacted to approximately 800 pounds per cubic yard, and that the cover be proportioned one part cover soil to four parts of refuse. Life expectancy of the site will be a function of landfill capacity, solid waste production rate of suitable substrate, and of land availability.

Incineration of solid wastes has the potential advantage of energy recovery, but it is a costly and complex process. The process is advantageous because the weight and volume of the refuse are reduced, but air quality control may preclude use in a non-degradation air quality maintenance area. Municipal installation and operation costs of incinerators have been in the range of 10 to 15 dollars per ton of refuse. Industrial wastes may require additional costs for separation or sorting of refuse and more complex air pollution control equipment.

Other disposal options include baling, shredding, and soil enrichment programs. Baling may result in cost savings through reductions in handling, transportation, and landfill size requirements. Shredding and soil enrichment programs have advantages in special applications, and all of these alternatives require specialized equipment and increased initial costs.

Recycling of solid waste materials is beneficial for resource recovery. The justification of separation and sorting costs will depend on the quantity and value of wastes. Again, this is an industry-specific consideration, but one which is becoming a more attractive alternative as resource depletion escalates materials prices.

Liquid Waste. Disposal of liquid wastes from industrial processes can be very costly. Primary, secondary, and tertiary treatment in a combined plant system can require approximately $12.6 million in capital investment for a 10 MGD capacity. Land requirements include retention ponds for settling of suspended solids as well as biological and chemical treatment plants to remove dissolved constituents. Effluent may be contained in a lagoon to supplement other treatment processes. The discharge of the treated water must be designed so as to avoid exceeding the assimilation capacity of the receiving water, be it the harbor, local drainage, or open water system.

Sludge disposal must also be considered, particularly with respect to potential metals and toxic materials accumulating in industrial waste treatment. Typical sludge disposal alternatives include biologic digestion, drying incineration, use as fertilizer, and ocean dumping by barge. Reclamation of chemicals in sludge for reuse of salable by-products has proven effective by certain industries. *Waste Management in the Texas Coastal Zone* (TAMU, 1973)/provides a detailed analysis of alternative waste treatment methods and cost estimating procedures.

Reuse of wastewater may be a viable alternative when treatment to a high quality level is required prior to discharge. This practice has proven particularly successful in industrial use of municipal wastewater. However, where there is a wide disparity between the

quality of the intake water required and the quality of the effluent, the costs of further treatment may easily exceed other available water sources.

Certain liquid wastes do not lend themselves to treatment at sufficient quality for reuse or release into the surface environment. Underground injection of wastes provides an alternative disposal method. Injection wells are drilled to a formation which will contain the type of waste discharged without contamination of groundwater supplies.

Relocation

The location of a large land area suitable for industrial development and the location of an access channel route of significant length will seldom be free of conflict with previous human activity. Pipelines, powerlines, roads, railroads, houses, and cemeteries may conflict with development plans and require special relocation, rerouting or removal.

Pipelines. Two primary considerations are evident in relocating pipelines crossing an inland canal development area. One is clearance beneath the channel or harbor area; the other is rerouting around an area proposed for structures. Channel clearance is obtained by construction of a parallel section of line deep enough to safely clear the maximum dredging depth, tying into the existing line, and salvaging the old line. Costs are affected by diameter, line pressure requirements, and material prices. In areas where structures are planned, routing of an existing pipeline around an area of structural development may be necessary to assure safety and serviceability. Plant location selection maximizing the use of existing lines and/or rights-of-way is desirable.

A generally less desirable method of obtaining clearance is the use of a bridge structure. While clearance might be obtained at a cost not significantly more expensive than below grade construction, the overhead pipeline is more vulnerable to hazards and presents navigation restrictions.

Powerlines. The objective in powerline relocations is generally to avoid a mixture of above-grade and below-grade routing. Thus, an above-ground powerline crossing the canal should be raised by taller support structures. Existing underground lines should be routed underneath the channel. Powerline conflicts in the industrial development area can best be resolved by rerouting.

Roads and Highways. Relocation concepts for roads and highways will vary with type of road and traffic volume. Smaller roads may be rerouted, removed, or incorporated into the site. Major highways would be rerouted around the harbor and industrial area, or bridged over the channel. Movable span bridges have been employed in the past although they are generally less desirable due to traffic delays, safety, and operation and maintenance requirements. Fixed span bridges, although expensive (approximately $50 per square foot) do not present these problems.

Increases in the size of barge towboats and dredging equipment has increased the height and width requirements for highway bridges crossing barge channels. Current standard project design of the Texas Department of Highways and Public Transportation is a bridge clearance of 52 feet above normal high water.

Railroads. Railroad grades are limited to a maximum of 1 percent. Therefore at least one mile of major construction is required either side of a bridge with 52-foot clearance. If barge and rail traffic volume is not excessive, a lift bridge may be used, as has been constructed at the Victoria barge canal. A rerouting of the track alignment around the project may be more desirable and easily coordinated with industrial rail service requirements. Considerations for such a project include right-of-way acquisition and foundation substrate.

Houses. It is common to purchase existing houses with the site acquisition and, depending on condition, sell for salvage value. As an alternative, existing structures may be utilized as office

space during construction. The possibility of incorporation into the industrial site is also a function of the condition and location of structures.

Cemeteries. The relocation of graves generally requires permission from heirs and may require approval from the Texas Historical Commission. A cemetery could be incorporated into greenspace portions of the project if not relocated.

Other Historical Sites. Proper route selections and development layout can avoid all but the most extensive historical sites. An archeological survey during site planning and design should be coordinated with and approved by the Texas Historical Commission. In most cases, provision of opportunity for archeological survey, inventory, and site investigation prior to development will be required.

Engineering Alternatives References

Delonge, H. C. and G. C. Guarino. 1975. "Variations in Raw Water Supply—Effect on Treatment and Cost." *Journal AWWA.* Vol. 67, No.2.

Espey, Huston and Associates, Inc. 1977. *A Study of the Placement of Materials Dredged from Texas Ports and Channels.* General Land Office of Texas.

Fair, G. M. J. C. Geyer, and D. A. Okun. 1971. *Elements of Water Supply and Wastewater Disposal,* Second Ed. New York: John Wiley and Sons, Inc.

Godfrey, R. S. (ed). 1975. *Building Construction Cost Data — 1976.* Duxbury, Massachusetts: Robert Snow Means Company, Inc.

Herbich, John B. 1975. *Coastal and Deep Ocean Dredging.* Gulf Publishing Company.

Herbich, John B. 1976. "Engineering Aspects of Operation and Maintenance of the Gulf Intercoastal Waterway in Texas." *Dredging: Environmental Effects and Technology.* Proc. of WODCON VII, San Francisco.

Marinos, George and J. W. Woodward. 1968. "Estimation of Hurricane Surge Hydrographs." *Journal of the Waterways and Harbors Division,* ASCE, Vol. 94, No. WW2.

McFarland, Frank, et al. 1976. *Coastal Inland Canals. Interim Reports (Draft).* Prepared for the General Land Office Coastal Zone Management Program. Texas A&M University.

Pavoine, J. L., J. E. Heer, Jr., and D. J. Hagerty. 1974. *Handbook of Solid Waste Disposal.* New York: Van Nostrand Reinhold Co.

Peck, R. B., W. E. Hanson, and T. H. Thornburn. 1963. *Foundation Engineering.* John Wiley and Sons, Inc., New York.

Reid, R. O. and B. R. Bodine. 1968. "Numerical Model for Storm Surges in Galveston Bay." *Journal of the Waterways and Harbors Division,* ASCE, Vol. 94, No. WW1.

Sandeen, W. M. and J. B. Wesselman. 1973. *Ground Water Resources of Brazoria County.* Prepared by the U.S. Geological Survey under cooperative agreement with the Texas Water Development Board, Report 163.

Texas A&M University. 1973. *Waste Management in the Texas Coastal Zone.* Office of the Governor, Division Planning Coordination, Coastal Resources Management Program, ICNRE, Austin, Texas.

Texas. Coastal and Marine Council. 1976. *Model Minimum Hurricane Resistant Building Standards for the Texas Gulf Coast.* Prepared for the General Land Office of Texas.

U.S. Army Coastal Engineering Research Center. 1966. *Shore Protection, Planning and Design.* Technical Report No. 4, 3rd ed. Washington, D.C.: GPO.

U.S. Army Corps of Engineers. 1957. *Gulf Intracoastal Waterway: Guadalupe River, Texas.* Revised Definite Project Report. Galveston District.

U.S. Army Corps of Engineers. 1974. *Project Maps.* U.S. Army Engineer District, Galveston Corps of Engineers.

U.S. Army Corps of Engineers. 1977. "News Release," Galveston District, Various issues.

U.S. Environmental Protection Agency. 1972. *Guidelines for Erosion and Sediment Control Planning and Implementation.* Report No. EPA-R2-72-015. Washington, D.C.: GPO.

U.S. Environmental Protection Agency. 1976. *Decision-Makers Guide to Solid Waste Management.* Report No. SW-500. Washington, D.C.: GPO.

"Unit Prices," *Engineering News Record,* August 5, 1976 and August 26, 1976.

Design Criteria Summary

Three sets of criteria which will be utilized in selection and design of an inland canal/industrial site have been discussed: industry location factors, engineering alternatives, and environmental constraints. These factors, taken as a group, guide the planning process to meet the project objectives; that is, the selection and design of a site which appeals to industry, minimization of adverse environmental impact, and competitive cost.

A matrix has been prepared as a summary of the three groups of criteria (see Figure 45). The industry location factors and the environmental constraints are considered constant in the matrix. The list of engineering alternatives provides a checklist of variations in site characteristics or design which can be employed and can visualize the effects of design decision on the project objectives.

Another way to view the matrix is as a tool for evaluating the tradeoffs between mutually exclusive objectives. In this context, the objective of achieving a locational factor (for example, access to navigable water) can be compared to the opposing environmental constraints (a site in proximity to navigation may also be more prone to hurricane flooding and disturbance of wetland systems; the needs for suitable industrial infrastructure may also cause an overburden on existing social services).

The list of engineering alternatives is a checklist which is used to evaluate the cost of the tradeoff, or in some instances, to point to a variation which alleviates a detrimental tradeoff.

Regardless of the utility of the matrix, is should be considered only as a design tool. As mentioned in the discussion on environmental constraints, the use of such a list as an accurate prediction of the impacts of decisions can be misleading. But it can be helpful to remind the designer of available options to meet the objectives of the facility and to maintain minimal environmental disruption.

LEAST ENVIRONMENTAL IMPACT CORRIDOR SELECTION

A least environmental impact corridor which allows sufficient area for inland canal site layout is located departing from the GIWW about 3.4 miles south of the Brazos River and 3/4 miles north of the San Bernard River. The channel corridor extends inland about 5 miles along a low ridge to the west of Jones Creek. The industrial site corridor includes large land tracts both north and south of the community of Jones Creek. This corridor is one of three alternatives identified in the study area and is considered typical of other locations found on the Texas coast.

The selection of the least impact corridor for the canal and industrial site is based on an interpretation of environmental design constraints as well as the spatial requirements of the project's design components. The following section presents the appropriate corridor width allowing maximum flexibility in the location of the canal and industrial park. It also presents the basis for preparation of the composite constraint map. Alternative environmental corridors which maximize environmental and socioeconomic compatibility and suitability are identified and described and a least impact corridor is selected for further study.

Corridor Dimensions

The dimensions of the project corridor reflect the number of features to be located within the corridor, the type of features, and their respective requirements. The objective at this point is to identify a zone within which the expected maximum dimensions of a typical canal-industrial park complex could be located. The specific composition and characteristics of both the canal and industrial park are subsequently presented (see Chapter III-D).

On the basis of existing canal systems (GIWW, Dow Barge Canal, Victoria Barge Canal) and typical industrial sites, a suitable corridor would be a minimum of 1500 feet wide for the canal and terminate in a contiguous minimum area of 2000 to 5000 acres for barge landing and industrial development sites. These parameters allow the inclusion of the direct project components (actual width of the canal, access roads, and levees, and area for industrial structures, support facilities and expansion area) as well as additional area to accommodate flexibility in the final alignment.

Selection of Alternate Corridors

Composite Constraint Map

The primary tool for identification of the least environmental impact corridor is the composite constraint map. The composite constraint map represents the net accumulation of mapped data elements which have been interpreted in terms of their respective innate characteristics and their suitability for or limitations to development. The general utility of composite constraint maps is to enhance the visibility of alternate areas most capable of development, and conversely, to define those areas most restrictive to development. The use of composite constraint maps in selecting alternate development corridors contributes to a maximization of environmental suitability and, conversely, a minimization of environmental cost.

The procedure applied in preparation of the composite constraint map is founded on the overlay mapping process. This concept, developed largely from the works of Phillip Lewis (1969) and Ian McHarg (1971), consists of mapping various environmental features and assigning an intrinsic value to each variable or map element. Each map presents not only the location of environmental features, but also the relative value or importance of that feature as a constraint on project development.

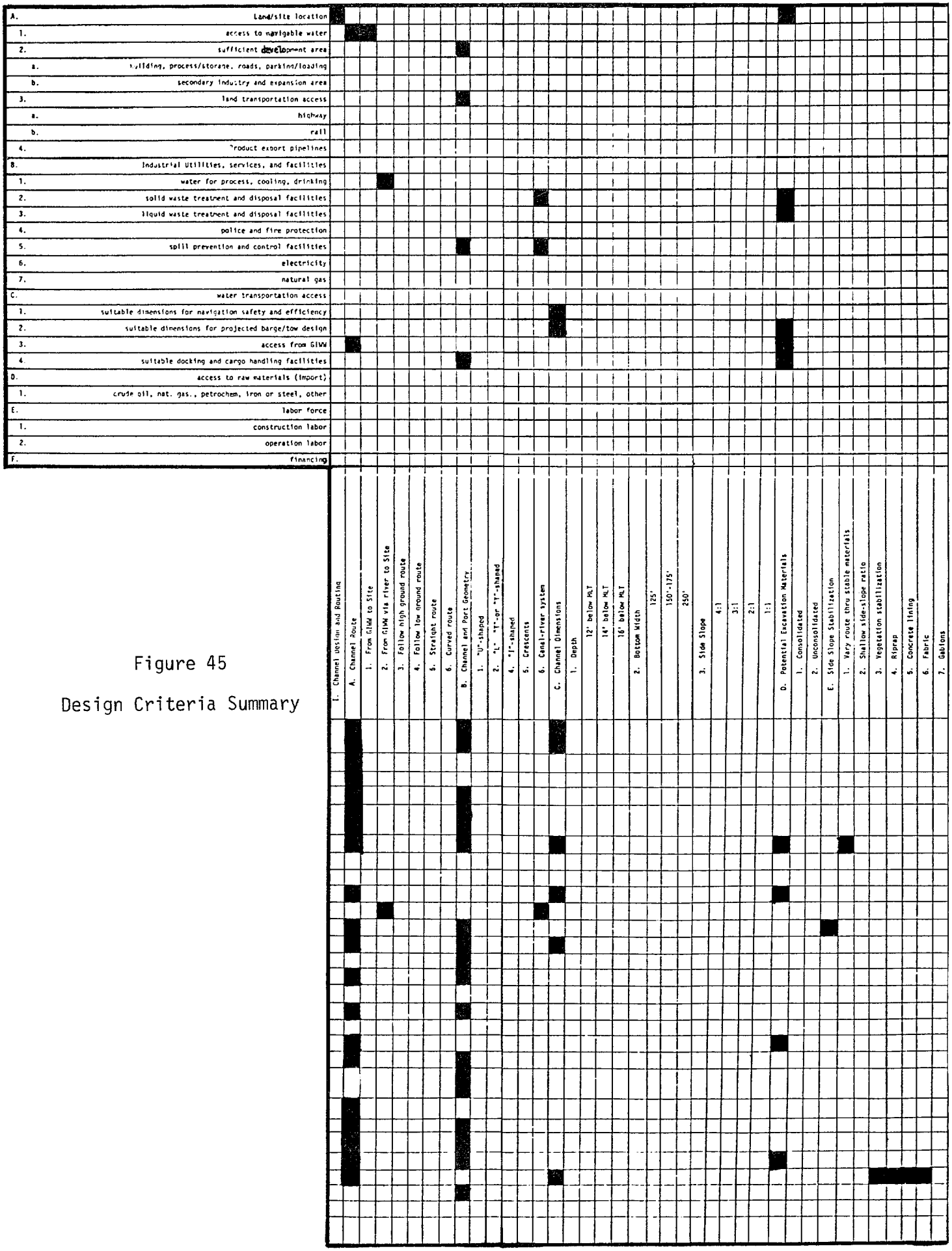

Figure 45

Design Criteria Summary

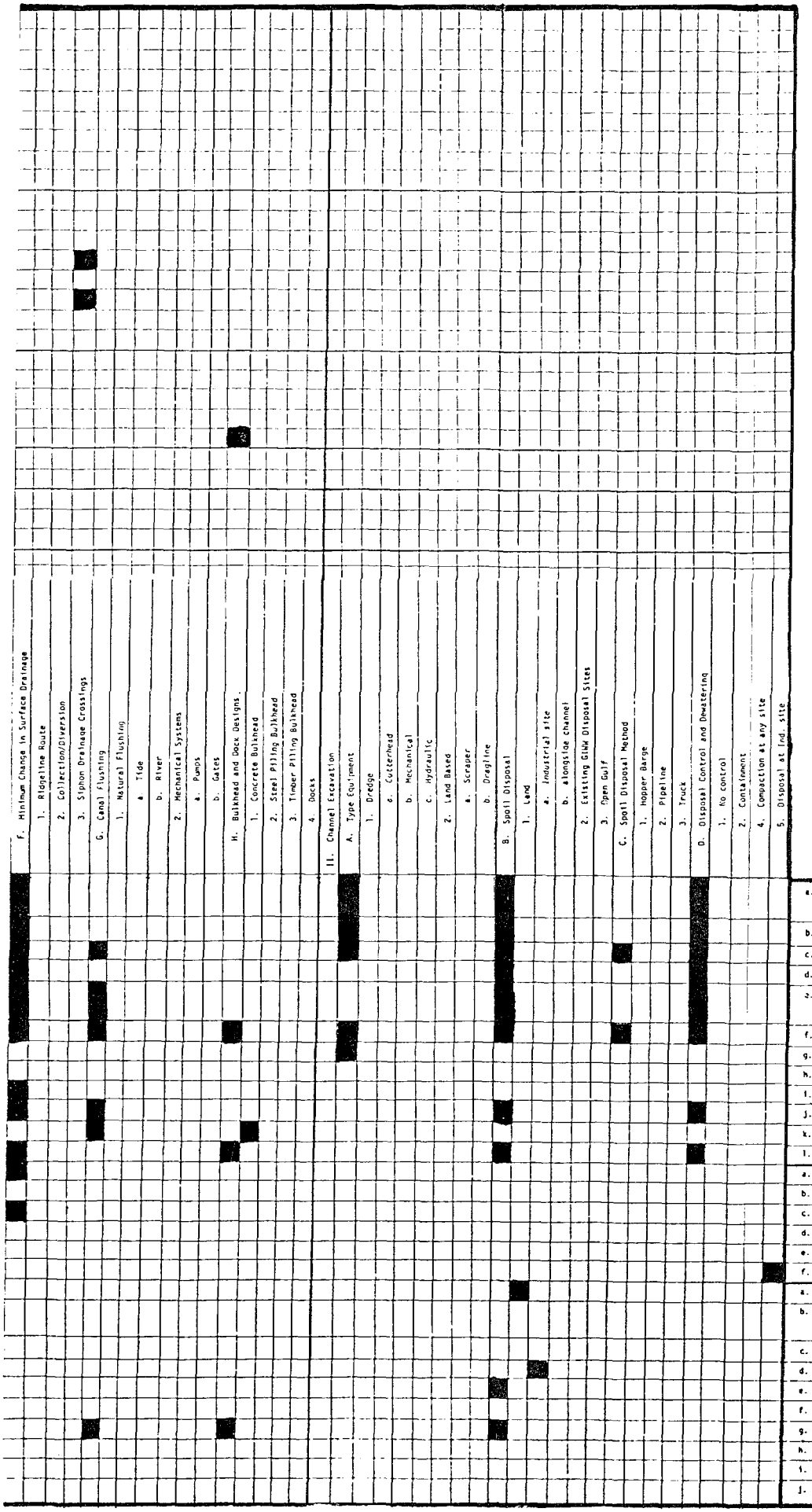

Figure 45
Design Criteria Summary
(cont'd)

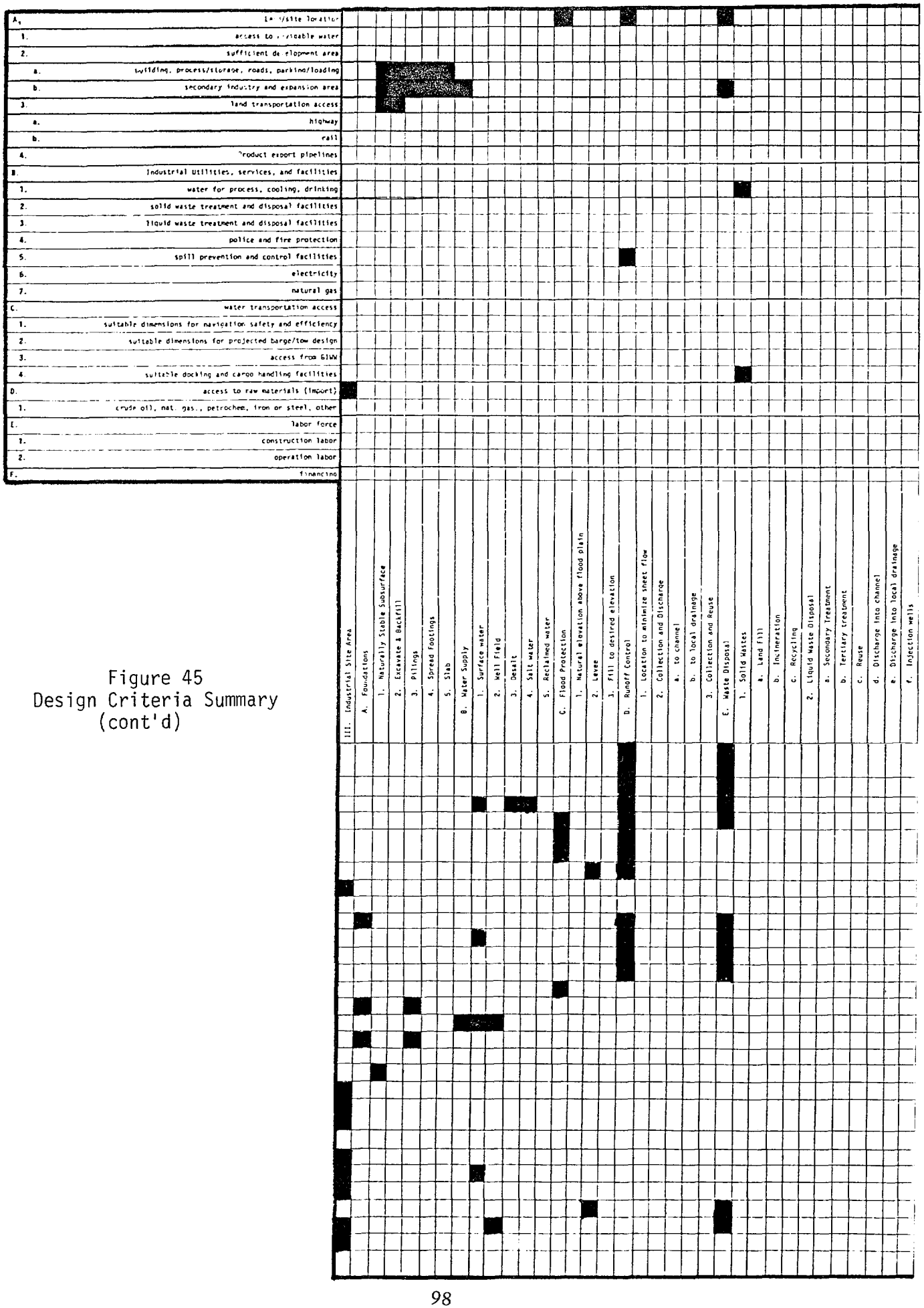

Figure 45
Design Criteria Summary
(cont'd)

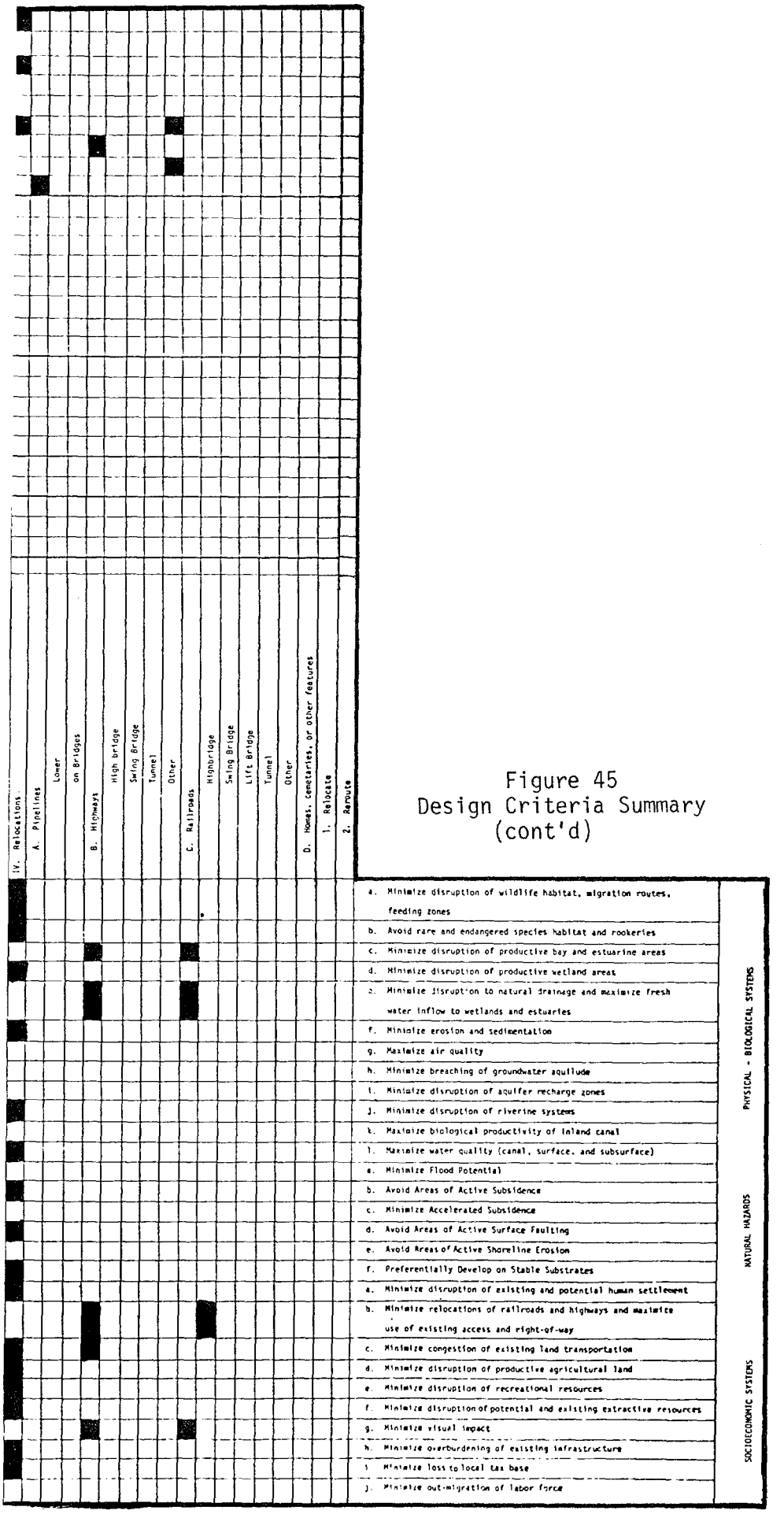

Figure 45
Design Criteria Summary
(cont'd)

Six environmental data maps have been prepared with a base map of drainage and major highway features:

Map 1 – Natural Hazards
Map 2 – Substrate, Soils, and Aquifer
Map 3 – Ecosystems
Map 4 – Wildlife
Map 5 – Land Use
Map 6 – Transportation, Minerals, Archeology

The data sources for each map are listed in Appendix C.

Each element on a map was evaluated by the study team and assigned a weight (Figure 46). Higher weight values represent higher levels of constraint. A description of the evaluation for each

Figure 46
Evaluation Map Elemental Constraints

Map Elements	Constraint Value
Natural Hazards	
Flooding	
5 foot surge flood (Carla-type)	1.5
10 foot surge flood (Beulah-type)	3
Subsidence areas	
Less than 0.5 feet	1.5
More than 0.5 feet	3.0
Faults (including apparent lineations)	3
Substrate	
Suitable for most developments	1
Possible problems	2
Unsatisfactory for most developments	3
Ecosystem Sensitivity	
Shrub-savannah	0.6
Cordgrass prairie	1.2
Freshwater marsh	1.8
Fluvial woodland	2.4
Brackish water marsh	3.0
Wildlife Habitat	
Duck, or deer (each-presence)	1
Geese (high or low presence)	1, 0.5
Endangered species	3
Drainage Systems	
Ditch, intermittent stream	1
Prominent river, bayou	2
Lake	3
Land Use	
Rangeland	0.75
Improved grazing or cropland	1.5
Wooded areas	2.25
Developed-industrial, residential	3
Transportation, Resource extraction, Archeological sites	
Major/minor roads	3/1
Sand and gravel operation, oil and gas operations	3
Archeological sites	3

HURRICANE EXTENT
FLOOD PRONE AREA (HURRICANE)
FLOOD PRONE AREA
FLOOD-PROTECTED AREA
HURRICANE EXTENT
FLOOD-PROTECTED AREA
FLOOD PRONE AREA (HURRICANE)
FLOOD-PROTECTED AREA
SUBSIDENCE > 1.0 FEET
FAULT LINEATION
GROWTH FAULT LINE
HURRICANE 100-YEAR FLOOD HEIGHT
RIVER 100-YEAR FLOOD HEIGHT
0
5000
10 000
scale feet
N
1 map
NATURAL HAZARDS

100
100
100
100
150
50
HARRIS-MOREY-CLODINE
MILLER-NORWOOD-PLEDGER
MILLER-
NORWOOD
PLEDGER MILLER ASSOCIATION
UNSUITABLE SUBSTRATE
POSSIBLE SUBSTRATE PROBLEMS
SUITABLE SUBSTRATE
SOIL ASSOCIATION BOUNDARY
100 UPPER CHICOT AQUIFER SAND THICKNESS
0
5000
10 000
scale feet
N
2 SUBSTRATE, SOILS, AQUIFERS map

BRACKISH-WATER MARSH
FRESH-WATER MARSH/SWAMP
CORDGRASS PRAIRIE
SHRUB SAVANNAH
FLUVIAL WOODLAND
MADE LAND
0
5000
10000
scale feet
N
3 ECOSYSTEMS
map

ALLIGATOR RANGE
EAGLE HABITAT
DEER HABITAT
DUCK HABITAT
GEESE HABITAT-high use
GEESE HABITAT-low use
0
5000
10000
scale feet
N
4 WILDLIFE
map

GRAZING-RANGE
RESIDENTIAL
INDUSTRIAL
WOODLAND
MARSH
FLOOD PROTECTION LEVEE SYSTEM
0
5000
10000
scale feet
N
5 map
LAND USE

6 map **TRANSPORTATION, MINERALS, ARCHEOLOGY**

7 map **COMPOSITE CONSTRAINTS**

map element and the basis for weighing the data elements are discussed in Appendix C. A composite map was prepared by superimposing each of the six evaluation maps. The composite map (Map 7) depicts zones of highest constraint (highest value)/and least constraint, from which a least environmental impact corridor can be selected.

An inherent difficulty in the data evaluation procedure is the comparability of the data values. Valid interpretations can be made concerning the relative suitability of constraints of a series of data elements (e.g., ranking the suitability of substrate types or soils). However, the comparison of those values on more than one map (e.g., substrate suitability and ecosystem sensitivity) must assume some relative weighting of one category versus another.

A review of similar applications of the evaluation mapping process provides a variety of approaches to preparation of the composite value map. One approach recommends that (1) the highest constraint classes from each map be combined to form a composite constraint map, and (2) that a network of links and nodes be developed to avoid the high constraint areas on the composite map (Minnesota Power and Light Company and Northern States Power Company, 1976). Another procedure for the location of a lineal least impact corridor first overlays natural processes maps and man-made and cultural features maps (Texas Tech University, 1974). A macro-corridor is then selected through the lightest area of the composites, representing the least concentration of high value features. A more precise least impact corridor is finally determined by selecting a series of low value points within the macro-corridor. The latter study differs essentially from the former by using a more select association of data elements and thereby avoiding the conceptual problems of comparing the other, more diverse environmental data categories. Neither of these studies attempted to rank or scale the evaluated data elements in such a way as to support composite averaging.

A more reliable data evaluation procedure for deciding among alternative lineal routes, but requiring detailed statistical calculations, attempts to develop a quantitative comparison of data elements (University of Georgia Institute of Ecology, 1971). The method applied a linear combination of component values multiplied by a weighting factor, giving the relative importance of the particular component values. Values were then numerically scaled so that a mean impact index could be calculated for each possible route. The calculation of the index for the routes and the comparison of routes was conducted by computerized matrix analyses. The route selection was verified through a sensitivity analysis, in which relative data values were varied over 20 stochastic runs.

The approach in this project to evaluate the mapped data elements assumes a range of weights from 1 to 3 for each data element. While this assumption unrealistically implies that each data category has equally high constraints, it is more valid than the many assumptions which would be required to posit different maximum constraints for each data category. Values within a category are assigned by arithmetically dividing the possible weight of three by the number of constraint levels per data category (2, 3, 4, or 5). The reader is referred to Appendix C for the relative ordering of importance of the elements in a data category.

The composite constraint map was prepared by laying a uniform sampling grid over each of the six constraint maps. The values of data elements at each sampling point on the grid were summed and value contours were drawn. The final contouring was made over all data maps on a light table, thereby assuring that the contours would most accurately follow the apparent constraints of each environmental feature.

The final composite constraint map was examined to determine an appropriate distribution of low value points. These points were linked linearly to identify corridors of least environmental constraint. Clusters of low value points were also isolated as representative of suitable industrial development areas.

Corridor Evaluation

After identifying the linear and clustered linkages of low value points, each corridor was investigated on the ground to verify the characteristics of the corridor.

Following field verification, a route comparison matrix was prepared. This matrix provided an index by which each low value corridor could be analyzed for individual constraints, thereby allowing a direct comparison of the alternative corridors.

In addition to the analysis of the individual environmental constraints, each corridor evaluation included engineering suitability and industry location factors. Engineering suitability was judged according to the applicability of various engineering alternatives as a means of alleviating environmental constraints. The advantages, disadvantages and cost of the applicable engineering alternatives were compared. The design criteria matrix presented in Figure 45 provided the guiding parameters for this analysis. Suitability for meeting industrial location factors was tested by determining the applicability of various engineering alternatives in providing for industrial requirements, again as presented in the previously prepared design criteria matrix.

The final factor to be evaluated was land ownership. Existing ownership, existing land use, and future development plans were determined and evaluated as a constraint or enhancement on the project for the selected corridor.

Figure 47 summarizes the sequence of steps followed in selecting least impact environmental corridors.

Corridor Descriptions

As identified in the analysis of engineering alternatives (see Chapter III-B-2) the two basic canal routing options are (1) following an existing river/canal route to higher elevation, then by canal to the industrial site, and (2) from the GIWW to the industrial site via canal. Upon analysis of the composite constraint map, one corridor has been identified in the first category and two in the latter category (Figure 48). The three corridors are shown in map view in Figure 49.

Existing Canal/River Route

Dow Canal to Oyster Creek Area. The corridor which fits the first category (route/site III) would utilize the existing Dow Barge Canal to a point north of State Highway 523. An access canal would be constructed from this junction trending perpendicular to the Dow Barge Canal and crossing State Highway 332. The industrial site would be bounded by Highways 332 and 523, the Missouri Pacific railroad, Chubb Lake, and Oyster Creek.

Response to design criteria. This corridor provides a suitable, contiguous industrial site of approximately 1700 acres. The site is relatively undeveloped, except for the Oyster Creek community at the southern boundary along State Highway 332. However, the area is industrializing at the present time. Firms which have located in this area include equipment sales, engineering contracting, oil field supply, metal goods, and a Houston Lighting and Power Co. substation.

Transportation access is provided by State Highway 332 on the southern boundary and State Highway 523 to the west. The Missouri Pacific railroad forms the west boundary of the site. A petroleum products pipeline and power transmission line cross the site between Chubb Lake and the community of Oyster Creek. Two drainage channels cross the site, one adjacent to the Dow Barge Canal and Flagg Lake Drainage/East Union Bayou. These channels and a small intermittent stream would require diversion.

Savannah-shrub and cordgrass prairie are the dominant vegetative communities. The

Figure 47

Environmental Evaluation Procedure

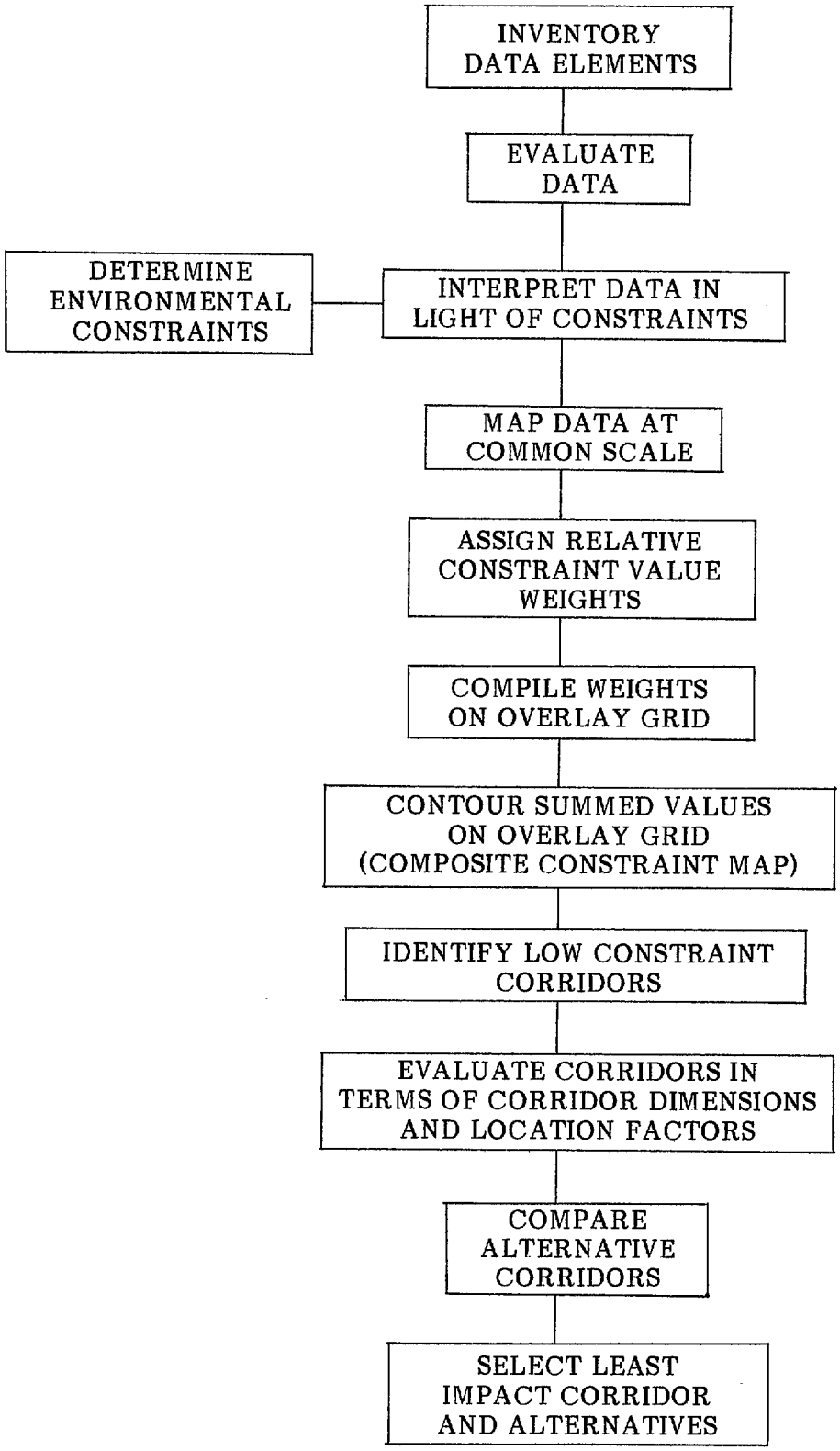

Figure 48

Corridor Evaluation Matrix

Industrial Park Site Area

LOCATION FACTORS/CONSTRAINTS	ALTERNATE SITES/ROUTES			
	4-8	4-9	5-9	4-5
overall constraint value				
developable area	2500 acres	1600 acres	800 acres	1700 acres
elevation	9'-20'msl	4.5'-20'msl	6'-9' msl	3'-9' msl
highway access	ST 36 2 lanes, paved shoulders	ST 36 2 lanes, paved shoulders	ST 36 2 lanes, paved shoulders	ST 332 4 lanes + service roads
railroad access	needs 7 mi. to Brazoria; 4.5 mi. bridge to Clute (2 hwy. crossings)	needs 7 mi to Brazoria; 5.7 mi to Clute with bridge + 3 hwy crossing	11.7 mi. to Brazoria; 3 mi. + bridge to Freeport	close to Mo.Pac.
ecosystems affected	savannah-shrub woodland	savannah-shrub cordgrass prairie brackish marsh	savannah-shrub cordgrass prairie brackish marsh, fresh water marsh	savannah-shrub cordgrass prairie
wildlife & endangered spp.	minor deer habitat	duck & geese	-	duck & and geese
natural drainage	Jones Creek headwaters	headwaters of Redfish Bayou Jones Creek tributary, + proximal to marsh	drainage bayou-intermittant	
soil characteristics	med. to well drained slow runoff mod. permeability	poorly to well drained slow runoff slow to med. perm.	poorly to well drained very slow to slow runoff very slow perm.	poor drainage slow runoff very slow permeability
storm flooding	river flooding 5-10' hurricane flood	10-15' hurricane flood	river flooding 9-12' hurricane flood	levee protection
land subsidence	.5' to date	.5' to date	.5' to date	.5'-1.0' to date
surface faulting	fault + lineation evidence	fault + lineation evidence	-	lineation evidence
foundation substrate suitability	suitable	suitable	suitable to poss. problems by area	possible problems
land use	1°wooded, rangeland; near small community	1°grazing grassland; near small community	improved pasture local industry development	rangeland; strong industrial trend
road relocation	1 small road thru site	unpaved road thru site	small farm road thru site, site straddles major hwy	no internal road projects
pipeline relocation	1 mjr. pipeline thru site	6 mjr.pipeline across site	1 major pipeline thru site	1 major pipeline at SE site border
Direct GIWW to Site by Canal	North Site / South Site			**Existing River/Canal to Site by Canal**
	Jones Creek		Census Tract 628 and south	Dow-Chubb Lake area

Canal Route

LOCATION FACTORS/CONSTRAINTS	ALTERNATE SITES/ROUTES			
	6-8	6-8	6-8	4-6
overall constraint value				
canal width (minimum)	2500 feet	1000 feet	1000 feet	not restricted
canal length to site	7.6 miles	5.7 miles	5.3 miles	0.57 miles
canal access water dimensions	12'mlt x 125' (GIWW)	12' mlt x 125' (GIWW)	12' x 125' (GIWW)	12' mlt x 100' (Dow)
ecosystems crossed, separated	cordgrass prairie, small grassland; woods	cordgrass prairie; grassland-shrub	cordgrass prairie; grassland; closely bounded by marsh	cordgrass prairie
wildlife habitat & migrations	Alligator, duck geese	Alligator, duck geese	Alligator, duck, geese	-
natural drainage	runoff flows away from canal no crossings	runoff flows away from canal close to Joncs Creek & trib.	cross sloughs & drainage ditch	cross process water channel & drainage channel
storm flooding	hurricane flooding	hurricane flooding	hurricane flooding	
land subsidence	.5'	.5'	.5'	0.5'-1.0'
surface faulting	perhaps crosses 2 faults	perhaps crosses 3 faults	-	-
canal excavatibility	good	fair to good	fair to good	poor
canal substrate permeability	moderate	moderate	moderate	low
land use	rangeland, residential indus. (SEADOCK)	rangeland, industrial (SEADOCK)	rangeland	rangeland, industrial
road relocation	1 major 2 lane +1 minor road	1 minor road	-	major 4 lane hwy
pipeline relocation	5 major pipeline crossings	3 major pipeline crossings	-	major pipeline crossings
Direct GIWW to Site by Canal	Eastern / Western			**Existing River/Canal to Site by Canal**
	Jones Creek Ridge		Stringfellow Ridge	Dow Canal to Oyster Creek Area

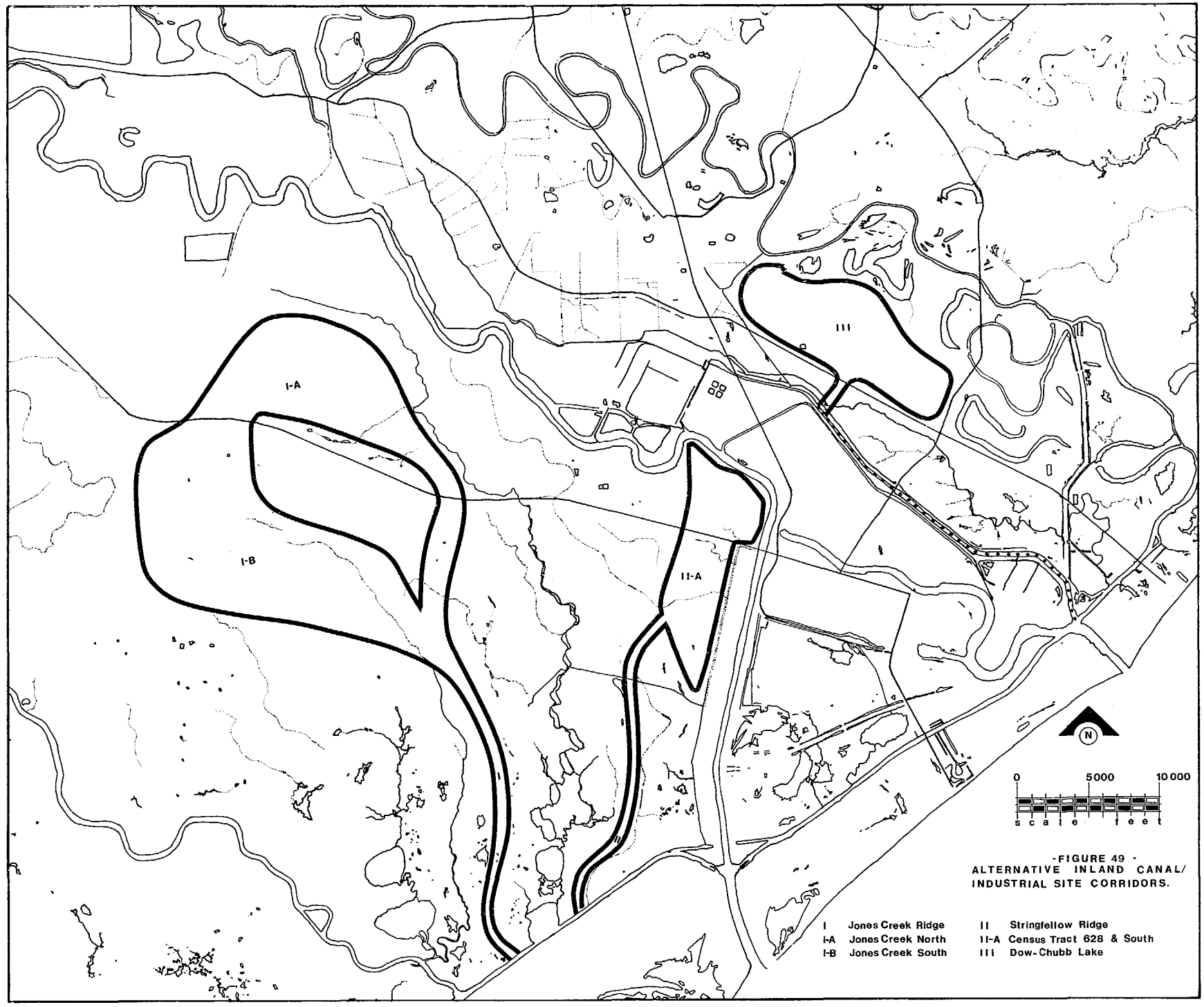

-FIGURE 49 -
ALTERNATIVE INLAND CANAL/ INDUSTRIAL SITE CORRIDORS.

I Jones Creek Ridge
I-A Jones Creek North
I-B Jones Creek South
II Stringfellow Ridge
II-A Census Tract 628 & South
III Dow-Chubb Lake

industrial corridor provides habitat for wintering duck and geese populations. These migratory birds do not make high use of the area. It is at the western end of a major wintering area extending from Oyster Creek eastward to the Brazoria National Wildlife Refuge. It is probable that recent development trends have lessened the suitability of the area to the wintering fowl.

The industrial corridor is close to the Freeport heavy groundwater withdrawal area and has experienced land surface subsidence of 0.5 to 1.0 feet in the past 34 years. The area is protected from hurricane and riverine flooding by a levee along the Dow Barge Canal and Oyster Creek. Should the area be flooded, poor soil drainage, very slow permeability, and slow runoff characteristics would increase the duration of the flood's effect in the low-lying area (3 to 9 feet msl).

Direct GIWW to Site Route

Stringfellow Ridge Route. This corridor (route/site II) departs from the GIWW about 2.2 miles south of the Brazos River-GIWW confluence and extends inland 5.3 miles along a low, narrow ridge to a point about 1.1 miles south of State Highway 36. The industrial site would be bounded on the north and east by the Brazos River and on the west by industrial land, freshwater marsh, and prairie rangeland. The southern boundary is about one mile south of State Highway 36.

Response to design criteria. Roughly 800 acres of land are developable in this corridor's industrial site. This area is, however, divided into two tracts by State Highway 36. There are about 600 acres north of the two lane highway and about 200 acres to the south.

The industrial site appears as a low constraint area as it contains grazing land use, negligible extent of subsidence, no critical habitat areas, and a suitable foundation substrate over most of the area. The canal corridor is also a low constraint area. Cordgrass prairie supports duck and geese populations on or adjacent to the ridge. The ridge substrate, formed by an abandoned channel's levee building processes, presents fair to good excavatability. Land-use is cattle grazing.

There are other aspects which are less suitable. Transportation conflicts result from traffic flow across the major east-west highway (see Figure 17). The elevation of the site is low at 6 to 9 feet (msl) and subject to riverine and hurricane flooding. The canal excavation would probably not produce sufficient quantities of material suitable for levee and fill. The site is also very close to a sizeable fresh water marsh formed in a low area along an intermittent drainage channel. That channel itself would either be crossed or included in the site area development. Finally, the corridor width of this canal route is 1000 feet at maximum, which is less than corridor dimension specifications. Other aspects are summarized in Figure 48.

Jones Creek Ridge. This corridor (route I) departs from the GIWW about three-quarters of a mile north of the San Bernard River and about 3.4 miles south of the Brazos River. The channel corridor extends inland about 5 miles along a ridge west of Jones Creek. The industrial site corridor includes more than 8000 acres encircling the community of Jones Creek.

Within this corridor are two alternate channel routes. One route, designated as Eastern Jones Creek Route (I-A), extends 7.6 miles inland to a termination north of the community of Jones Creek, crossing Highway 36. The other, designated as Western Jones Creek Route (I-B), is about 5 miles long and terminates to the south of the community of Jones Creek. This route crosses the upper reach of Redfish Bayou which is an area of particular ecological concern (see Chapter III-C-4). The amount of developable land is about equally divided between the north and south areas. The north and south sites are connected by a swath about 2300 feet wide between Clemens State Farm and the community of Perry Landing.

This corridor includes Seadock's proposed onshore pipeline alignment and oil storage terminal area. The corridor width is sufficient to allow compatible routing of both the inland canal and Seadock's pipeline and terminal with a minimum of conflict with the brackish water marshes on either side of the Jones Creek Ridge.

Response to design criteria. Land transportation access is provided by Highway 36. An abandoned railroad right-of-way extends from Brazoria into Clemens State Farm. The Brazos River is a close-by source of water, although tidal influence increases river water salinity. The industrial site north of Jones Creek includes woodlands and prairie grasslands. Part of the wooded area has been cleared for grazing. The woodland provides habitat for a low density deer population. It has also been identified as an attractive area for potential residential development. The southern site includes prairie grasslands with both cordgrass and savannah communities. It is above the inland boundary of the coastal brackish water marsh. Duck and geese winter at the site, but not in as large numbers as closer to the coast in the marsh. The southern site is at the headwaters of Redfish Bayou, a critical habitat in its lower reaches and a major source of fresh water to the adjacent brackish marshes.

The northern site is at elevation between 9 and 20 feet (msl). The southern site varies in elevation between 4 and 20 feet, with most of the area less than 12 feet (msl). Most of either site is susceptible to both hurricane surge-tide and river flooding. Soil and substrate characteristics are generally suitable for heavy industrial development throughout the area. There is evidence of a surface fault and structural lineation (see Appendix C; Map 1) crossing both north and south sites.

The canal corridor width is approximately 2500 feet, although it narrows to about 1500 feet close to the GIWW. The ridge on which the canal is routed separates brackish water marsh bodies and is actually a drainage divide between the Brazos and San Bernard Rivers. Natural drainage would therefore flow away from the route. The ridge is vegetated by cordgrass and savannah-grassland assemblages. The channel corridor crosses as many as three surface faults, not known to be active, and as many as six pipelines.

Corridor Selection

The route using the existing Dow Canal for inland access has obvious advantages. The major share of canal excavation is, of course, complete. The area is already strongly tending to industrial development and there is almost sufficient land available to meet corridor dimension criteria. Finally, there are few striking environmental constraints.

However feasible this alternative is, its adoption is not satisfactory toward the furtherance of this study. The purpose of the study is not to prepare a site specific project design, but is to assess the feasibility of inland canal alternatives to traditional bay margin or riverine developments generalizable to other areas. The Dow Barge canal and Dow Industrial Complex is a working example of the inland canal concept. Yet to incorporate the Dow Canal in this study's scenario would greatly reduce the generalizability and utility of the study's results.

Although the Stringfellow Ridge Route is a low environmental constraint corridor, location factors preclude it as a suitable project area in this study. First, it has overall insufficient acreage. Secondly, the acreage is not contiguous, but is divided by a high-use highway above grade to a fixed span bridge. Finally, the canal corridor width is insufficient to ensure environmental protection to surrounding brackish marsh and coastal prairie.

The Jones Creek Ridge corridor is the more likely project area. First, it has between 3,000 and 8,000 acres of developable land in a low constraint area. The north and south sites could be developed separately or in tandem, depending on the total amount of land needed for returning

development investment. Secondly, the ridge route is of sufficient width and minimizes disruption to drainage.

The major comparison between the eastern route and western channel route alternatives (Figure 48) in this corridor is the monetary cost of building a bridge at the canal–Highway 36 juncture versus the ecological cost of crossing the upper reach of Redfish Bayou. The major comparison between the north and south industrial sites is between developing in the woodland north of Jones Creek, which is a scenic potential residential area, versus developing adjacent to the coastal brackish water marshes, thereby potentially disrupting water and nutrient supply patterns in the productive wetland.

In conclusion, the Jones Creek Ridge Route is the best corridor in the study area for developing an inland canal/industrial park complex with minimal environmental impact. This corridor allows alternative route selections for both channel and industrial sites. This final selection and concomitant project design is presented in Chapter III-D.

Having made this corridor selection, it is necessary to note the land ownership patterns in the corridor area. Seadock, Inc., is the single largest landholder in the corridor. Their property includes the access ridge, part of the adjacent marshland, and almost all of the coastal prairie directly south of the incorporated limits of Jones Creek. Representatives of Seadock have indicated that this large tract exceeds their land requirements and would be suitable for industrial development. Another private corporation owns land between Jones Creek and Clemens State Farm. Most of the land between the Seadock property and the San Bernard River is privately owned. This tract of land may be closed to industrial development. It consists partly of rangeland and partly of natural woodland, shrub, and marsh ecosystems which are presently managed as a wildlife preserve. Most of the area to the north of Jones Creek consists of small, privately owned tracts. In summary, it may be excepted that more than 50 percent of the corridor is currently owned by industrial firms open to land development, and that most of the remaining land is available for purchase.

Least Environmental Impact Corridor Selection References

Allen, B. L., et al. 1974. Procedure for Location of a Least Impact Environmental Corridor for a Lineal Development. Prepared for the Texas Water Development Board by Water Resources Center, Texas Tech University.

Lewis, P. H., Jr. 1969. Upper Mississippi River Comprehensive Basin Study: Appendix B, Aesthetic and Cultural Values. U.S. Department of Interior, National Park Service, Northeast Region.

McHarg, L. L. 1971. Design with Nature. Doubleday/Natural History Press, Garden City, N.Y. 198 pp.

Minnesota Power Light Company and Northern States Power Company, 1976. Twin Cities to Forbes Transmission Project – Construction Permit Application for a 500/345 KV Transmission Facility. Minneapolis, Minn.

University of Georgia. Institute of Ecology. 1971. Optimum Pathway Matrix, Analysis Approach to the Environmental Decision-Making Process. Test case: Relative Impact of Proposed Highway Alternates. Athens, Georgia.

PROJECT LAYOUT, DESIGN AND CONSTRUCTION

The overall configuration and design of the canal and industrial site are determined by the physical characteristics of the corridor, the traffic to be handled, and the requirements of prospective industries. The choice among engineering alternatives is determined by the extent that environmental degradation can be avoided while answering project objectives with minimal cost.

The following discussion describes the site layout and design of the channel, harbor, and industrial site, applying the engineering alternatives compiled in Chapter III-B-2. A summary of the estimated construction costs, equipment production rates and project work scheduling is included.

Project Layout and Design

The least impact corridor for routing of the navigation channel is generally confined to the ridge west of Jones Creek. The selected development sites are located north and south of highway 36 in the vicinity of the Jones Creek Community. These areas and the alternate channel corridors are shown in Figure 49.

Entrance Channels and Main Approach Channel

Routing. Alternatives in routing the channel within the study site corridor are affected by the presence or absence of the proposed Seadock onshore pipeline and terminal (tank farm). In the absence of the Seadock project, the preferred route would essentially follow the centerline of the corridor, bending to the west into the southern industrial site. This channel would be 24,000 feet long. If Seadock's proposed pipeline and terminal alignments are developed, the channel would follow the western edge of the corridor, as shown in Figure 50. The approach to the industrial site would follow a more southern alignment to avoid conflict with the Seadock terminal. This channel would be 20,000 feet long.

For either route alternative, there would be north and south entrance channels connecting the centerline of the GIWW to the project channel. The radius of curvature must be at least 2,000 feet. Limiting the south entrance channel to this radius would minimize disruption of the lower Redfish Bayou marsh area.

Channel Traffic Demand. Although it is anticipated that the major input to the refinery would be supplied by pipeline, and that the refinery would feed the petrochemical plant, each facility and other industries locating at the site may require input by barge. The average daily input will be determined by the type and size of industry, petroleum and petrochemical supply, and product markets. Receipts at existing Texas port systems serving similar industrial facilities range from approximately 25,000 to 100,000 barrels per day. A maximum estimated daily input at the study site, if all refinery inputs were supplied by barge, would be 250,000 barrels per day.

Shipments at similar existing port systems range from 10,000 to 100,000 barrels per day. Exports barged from the refinery are expected to be 170,000 barrels per day. The petrochemical complex is expected to export 20,000 barrels per day by barge.

A common size of barge currently in use on the GIWW is 35 feet wide, 195 feet long, and has a capacity of 10,000 bbl. when loaded to nine feet. Barges of 54 by 297 feet with a capacity of 30,000 bbl. when loaded to 10 feet are also frequently used (Patton, 1977). Tows of one or two 10,000 bbl. barges are typical for transport of chemicals, while tows for petroleum may range from 50,000 to 100,000 bbl. in 20,000 to 30,000 bbl. barges, respectively. According to trends in waterway traffic, the probable maximum-sized tows expected in the channel would be either three 35'x195' or two 54'x297' barges (Patton, 1977). The length of the project canal would be approximately seven miles. Average towing speed, considering curves and harbor requirements, should be three to four miles an hour, resulting in a maximum transit time of two hours.

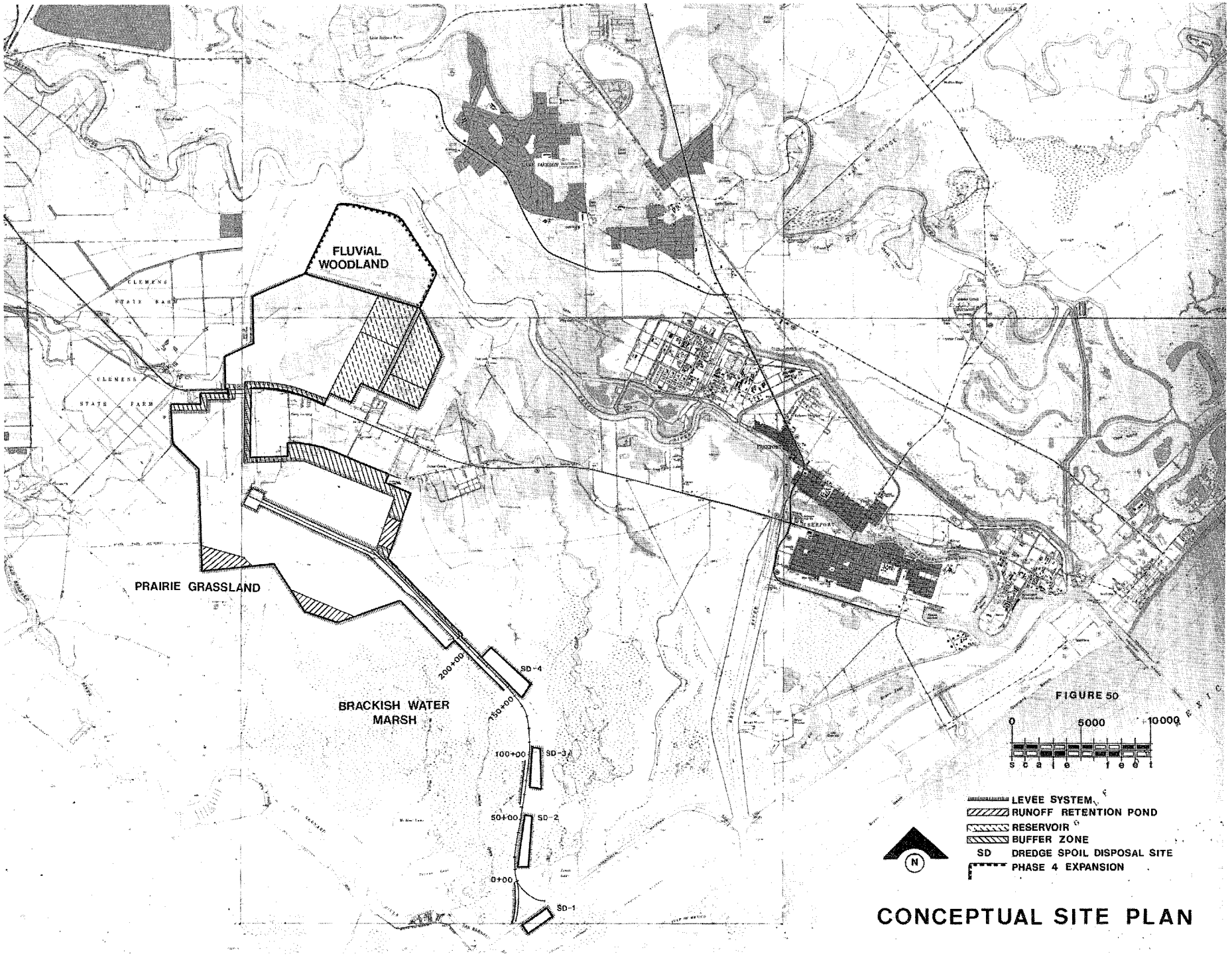

CONCEPTUAL SITE PLAN

To provide a daily input of 200,000 to 250,000 bbl. per day, a maximum of 25 10,000-bbl. barges or 12 two-barge tows would be required. Refinery exports could necessitate 17 10,000-bbl. barges, or 8 two-barge tows daily. Petrochemical exports would require two 10,000-bbl. barges and possibly two one-barge tows each day. If barges were carrying a load only one way, channel traffic could be as much as 22 tows each way, daily.

On-board pumps can unload 3,000 to 5,000 bbl. per hour, depending on pipeline capability. Thus, unloading time for a 10,000 bbl. barge ranges from two to three-and-half hours. With a two-hour allowance for docking, inspection and departure, a dock-capability of five to six tows per day is expected. In order to avoid critical scheduling, three oil docks would be required to handle a maximum import of crude oil.

The distribution of docks will depend on the actual industries. A typical pattern would be a central facility at the refinery site with about four loading/unloading docks and two or three docks located at the petrochemical plant.

Channel Dimensions. The approach channel from the GIWW to the project channel would have a bottom width of at least 240 feet. This width would allow for 700'x54' tows to pass with 30 feet of clearance and five degrees of yaw. The length of the approach channels would be 2,000 feet and have 2,000 feet of transition into the main project channel.

At 3:1 channel side slope is considered typical for consolidated clay substrate. Because this is the material expected to be most prevalent in the route (Seadock, 1974; Sandeen and Wesselman, 1973), the channel would be dredged to a 3:1 slope initially and areas of particular instability (generally sandier unconsolidated materials) would be dredged to a 4:1 slope.

With a main channel bottom width dimension of 125 feet, 3:1 side slopes and a project depth of 13 feet msl, the water surface width would be 209 feet at mean high tide (see Figure 51). The channel will initially be dredged in a vertical cut to two feet below project depth, to allow for sedimentation. The top width of the cut would increase by six feet for each additional foot of elevation inland. Although the project dimensions for expansion of the GIWW have not been formulated, proposals indicate a bottom width of up to 250 feet and a depth of up to 16 feet.

Figure 51
Canal Cross Section

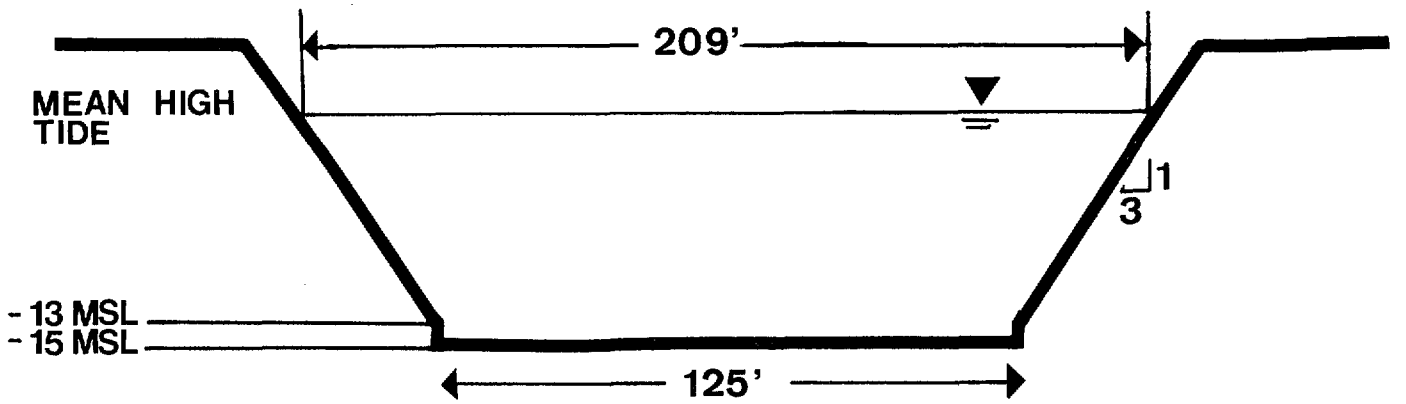

Slope Protection. The channel slope protection would consist primarily of seeding and sprigging, where necessary, of adapted grass species. After a period of navigation use, areas susceptible to erosion can be additionally protected by stone riprap or gunite. Erosion problems are to be expected particularly at the junctures with the GIWW, because of the increased exposure to boat and wind-fetch wakes. A delay in placement of erosion control materials until problem areas are visible allows installation on a specific need basis, resulting in less unnecessary expenditures.

Drainage Control. Although reaches of the channel exposed to a significant surface drainage area are minimized by design, a drainage control levee will be required along the south entrance channel, between Stations 50+00 and 70+00, and between Stations 180+00 and 220+00 (see Figure 50) to provide protection from bank erosion. The levee should be 15 feet in elevation, with a top width of 10 feet.

Redfish Bayou Diversion. The barge canal would cross Redfish Bayou at Station 200+00. This drainage area is intermittent north of the crossing point and flows regularly south of the crossing. Redfish and McNeal Bayous carry the majority of the freshwater flow to the wetland areas south of the industrial site.

Diversion of Redfish Bayou under the channel would be required to maintain its flow (see Figure 52). Although a siphon conduit would be the most economical design, sufficient slope could probably not be obtained to gain adequate flow. A sump pump would be required on the downstream end of the conduit to increase flow and minimize sediment accumulation.

Figure 52
Redfish Bayou Diversion

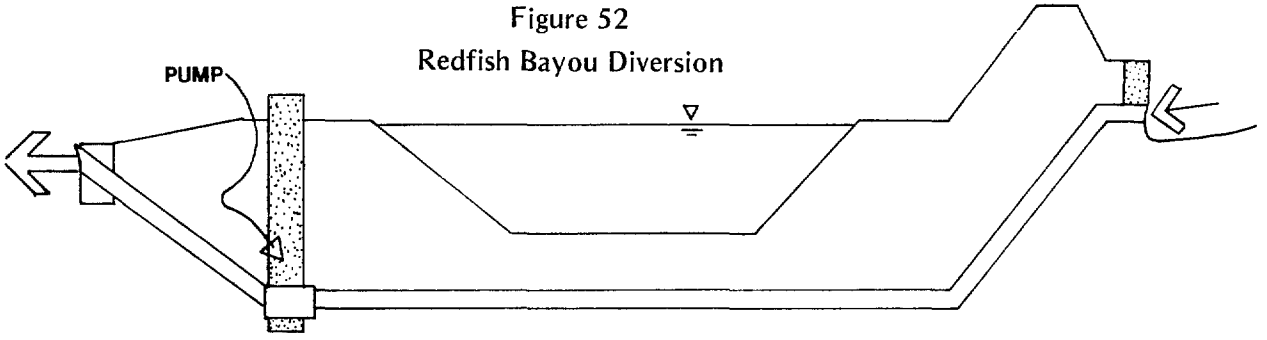

At the upstream end of the conduit a 2,000-foot diversion levee with a crest height of 15 feet (msl) would be required. Material for this levee can be obtained from land-based excavation of the inland channel route gulfward of the diversion and from grading of the bayou channel at the interface with the conduit to form a shallow pond. A concrete headwall would be constructed around the intake and discharge conduit.

Dredged Material Disposal Sites. A minimum amount of material dredged from the channel can be feasibly used as fill for the industrial site because of excess pumping distance. The estimated area required for disposal of this material is 310 acres. One 45-acre site with containment levees would be developed on the south side of the GIWW across from the entrance channel. Three additional sites of 64 acres, 69 acres and 132 acres would be constructed adjacent to the main channel, centered approximately at Stations 30+00, 85+00, and 160+00. Containment levees would be constructed on each site at 10 feet above grade with a 10-foot top width and 3:1 side slopes. The 45-acre site could contain approximately 560,000 cubic yards of dredged material, assuming a bulking factor of 1.3. The other site could contain 790,000 cy, 850,000cy, and 1.6 million cy, respectively.

It is assumed that through natural compaction of the initial material these sites could also be used for disposal of maintenance dredged material. The largest site (Station 160+00) would be reserved only for harbor maintenance material.

Shoaling would be greatest at the entrance of the channel and harbor entrance. Additional material in the channel may be expected from bank failure. Although exact shoaling rates cannot be predicted, the adjacent reach of the GIWW by comparison is dredged on an average of 52,300 cubic yards per year per mile. Dreding frequency averages once every 2.4 years. The project channel, however, (beyond the entrance reaches) would not be expected to shoal as rapidly as the adjacent GIWW because it will receive less traffic and is less susceptible to river and Gulf sediments. Existing channels of similar design tend to verify a lower maintenance dredging requirement for the inland-type channel. Many of the inland portions of the Victoria Barge Channel have never required maintenance dredging (e.g. Miles 12-14; 22-32). Those inland reaches of the Victoria Canal that do require dredging average less than 6,000 cubic yards per year with a dredging frequency of seven years. The inland Dow Barge Canal at Freeport does not require maintenance dredging. But this is primarily a result of high volume water withdrawal which tends to keep sediments suspended and removes them from the channel.

If the project channel required dredging of 25,000 cubic yards per year per mile, 187,000 cubic yards or 243,100 cubic yards at a 1.3 bulking factor would be generated per year; 2.4 million cubic yards would be generated in 10 years. The maintenance material capacity of the three designated sites within and adjacent to the channel right-of-way is approximately 1.5 million cubic yards. Additional sites could be utilized south of the GIWW and a large site may be available adjacent to the San Bernard River south of the GIWW.

Right-of-Way. A minimum channel right-of-way of 500 feet should be acquired from Station 0+00 to 180+00 and at the entrance channel. This would provide control over land use adjacent to the channel and necessary land for enlargement of the channel, particularly upon enlargement of the GIWW. A 500 foot channel right-of-way would amount to 275 acres.

Harbor. The layout of the harbor is designed to provide sufficient waterfront for the postulated industries in accord with the projected barge traffic, channel capacity and maneuvering requirements. The location, design, and number of docking facilities and turning basins within the harbor are considered industry specific and will be discussed only in general terms.

Site Layout. In the study case, the majority of shipping would be associated with the refinery. Therefore, an advantageous positioning of the refinery within the site would minimize travel time, and congestion. The other principal waterfront industry would be the petrochemical complex. These two industries would be spatially related, requiring proximity for pipeline connections as well as allowing barge maneuvering between the two docking facilities.

Assuming a maximum berthing requirement of five docks at the refinery, 2,000 feet of waterfront would be required without perpendicular slips. Three docks at the petrochemical complex would occupy about 1,200 feet.

The site layout shown in Figure 50 includes a total of approximately 20,000 feet of waterfront with 8,000 feet on the north side and 12,000 feet on the south side. A 1,000x 1,500 foot turning basin would be located at the terminus of the canal.

The design bottom width of the harbor would be 250 feet, with 3:1 side slopes and a depth of 13 feet msl. If the land elevation at the harbor is 10 feet msl, the surface width of the channel would be approximately 388 feet. 69 feet along each side of the channel would be available for berthing room if dredged to project depth (see Figure 53).

Industrial Site

Site Layout. The site is a 9,000-acre tract in two segments located north and south of highway 36 and the communities of Perry Landing and Jones Creek (see Figure 50). The boundaries of the site are the Brazos River on the north, the Clemens State Prison Farm on the west, and the

Figure 53

Harbor Dimensions and Berth Zone

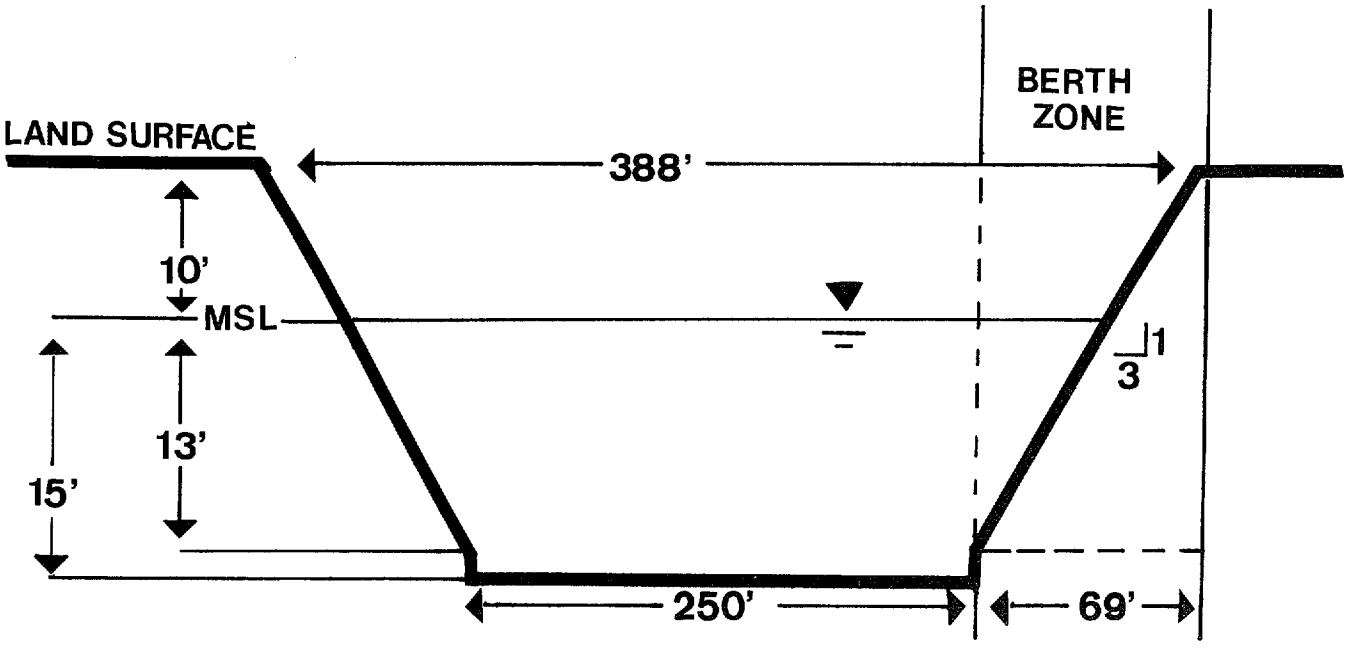

McNeal/Redfish Bayou wetland on the south. The north site has Jones Creek as its east boundary, while Redfish Bayou limits the eastern edge of the south site.

The prominent features determining the configuration of the industrial site are surface drainage patterns, distribution of wetlands, and existing and projected land uses. Within the industrial site, the principal land allocation considerations include the control of site runoff, the land requirements of the primary industries, and the location of utilities. The site acreage allocation is shown in Figure 54.

Figure 54

Acreage Allocation by Use

Use		Area, Acres
Refinery		1,100
Petrochemicals		400
Other Industry		4,000
Commercial		94
Future Development		1,520
	Sub Total	7,114
Public Dock and Storage		20
Utilities		965
Administrative		30
Buffer Zones		881
Upper Channel, Harbor and Turning Basin		155
	Sub Total	2,051
Channel ROW and Spoil Disposal Areas		612
	Total Land Area	9,777

The two sites are functionally separate; the south site would be developed with waterfront industry and terminal facilities and the north site would contain associated or ancillary industry, water and liquid waste treatment facilities and reservoirs.

A primary corridor connecting the sites would be located west of the community of Perry Landing. This corridor would contain highway, rail, pipeline, and transmission line linkage between the two sites. A secondary corridor would be located along Perry Landing Lane, between the communities of Perry Landing and Jones Creek. This right-of-way could be used to route process water, wastewater and return cooling water pipelines from the reservoirs and treatment facilities located in the northern tract.

Site Drainage and Flood Protection. Minimizing interruption of natural drainage is particularly critical in this area because of the impounding nature of the flood protection levees required and the proximity of the site of productive wetlands.

An analysis of topography and runoff patterns in the site area (see Figure 55) indicates two watersheds with minor subdivisions. The channel alignment follows a major watershed divide to Station 150+00, at which point it crosses the Redfish Bayou watershed and then follows a minor divide between the Redfish Bayou and McNeal Bayou watersheds. The upper drainage area of the Redfish Bayou watershed is confined generally by S. F. Austin Road, the channel alignment area, and higher elevations southwest of Perry Landing. Flows to McNeal Bayou and associated wetlands are from an area south of the channel alignment and the southern boundary of the State Prison Farm.

The south site includes the upper watershed of Redfish Bayou, which has only intermittent channelized flow. In the McNeal Bayou drainage area, the site boundary is located above defined intermittent drainages in an area of predominant sheet flow.

As indicated in Chapter II-B, the 100-year flood limit would inundate land ranging in elevation from 14' to 17' msl on the northern site. The 100 year flood limit by hurricane surge is to elevation 13' msl at the southern site. Therefore, a flood protection levee of elevation 18 feet msl would be required on the north site and 15 feet msl elevation on the south site.

Material excavated from the harbor and the approach channel above Station 100+00 would be suitable for construction of the flood protection levees along the south site boundary, the harbor and the turning basin. The levees would have a top width of 10 feet, and 3:1 side slopes, which would be stabilized by vegetation.

Additional excavated material would be used to fill the interior of the industrial site south of Highway 36. Fill on the north side of the harbor would raise the site to 10 feet msl. This area would be graded to the east. The south side of the harbor would be filled to eight feet msl, and graded to drain to the south.

The flood protection levee at the north site would be constructed of material borrowed from within the site. This levee would also have a top width of 10 feet and 3:1 side slopes. Additional site fill is not contemplated for the north side.

Retention Ponds. The flood protection levees on the south site can also be beneficial in preventing spills or polluted runoff from entering the harbor or adjacent watersheds. Drainage ditches and the general slope of the site fill would be designed to direct runoff into three holding ponds, two located on the southern boundary, and one located in the buffer zone on the eastern boundary. These ponds can be utilized to retain pollutants as well as to manipulate the quantity and timing of runoff. Water released to the local drainages can thereby approximate original freshwater flow patterns to the wetlands. Within these ponds a series of smaller ponds may be constructed, to allow for settling of sediment and/or sequential treatment of toxic materials.

FIGURE 55

SITE DRAINAGE

The outflow from the holding ponds should be designed to encourage sheet flow rather than point discharge. This can be accomplished in part by directing the flow to a series of discharge points radiating out from the levee.

Reservoir Design. The borrow area for the levees on the north site would be further excavated for construction of reservoirs for process water, wastewater, and cooling water. The embankments would be constructed with a core of compacted clay on 1:1 side slopes covered with topsoil to a 3:1 side slope. The width of the embankment crest would be 10 feet at elevation 25 feet msl.

Buffer Zones. The acquisition of buffer zones to visually and spatially separate heavy industry from other land uses is common practice in industrial park design (see Lochmoeller, et al, 1975). The buffer zone may include highways, commercial areas, and/or greenspace. As shown on the conceptual site plan (Figure 50), greenspace at least 400 feet wide is proposed between the industrial site and adjoining residential areas. Because more intense industrial development is projected for the tract north of the harbor, a buffer zone of up to 1,700 feet in width is proposed for the area adjacent to S. F. Austin Road. This tract's flood protection levee, which would be constructed along the southern edge of the buffer zone, will assist in reducing visual and audible impacts. Tree planting along the northern edge of the zone would provide protection. Greenspace acquisition is also proposed along the eastern boundary of this tract to discourage waterfront development in the Redfish Bayou watershed.

The flood protection levees and reservoir embankments constructed on the north site would isolate the industrial area from the Brazos River Road and residents of Jones Creek. A buffer zone acquired ädjacent to the Highway 36 right-of-way would minimize the impacts on the residents of Perry Landing.

Utilities. The utilities to be constructed during the Phase 2 site preparation include a process and potable water supply, wastewater treatment facility, and cooling water reservoirs. It is assumed that electricity would be brought to the site area by Houston Lighting and Power Company upon completion of the South Texas Nuclear Plant. The design concept employed for utility services envisions construction of major, capital intensive facilities during preparation of the industrial site thereby minimizing the initial investment required by the industry. The cost of the facility would be returned by utility service fee. Each tenant would be responsible for installing the internal connections to the central facilities as well as providing facilities unique to that industry, such as specialized waste treatment.

Water Supply. The total initial potable and process water demand for the refinery and petrochemical plant will be approximately 20 mgd (see Chapter III-A). This demand can be supplied by a combination of surface and ground water. Surface water supplies for the Brazos River will amount to approximately 13 mgd (Hogue, 1977). To avoid the saltwater wedge, diversion from the Brazos would require an intake channel and pump station located north of Highway 332 in the vicinity of the Dow Brazoria Reservoir. A 30-inch conduit would carry the raw water a distance of approximately five miles to a 5,600 acre-foot capacity storage reservoir at the site.

The remaining initial water demand of seven mgd may be supplied by groundwater or a combination of groundwater and recycled wastewater. A development cost for nine mgd of groundwater was assumed in expecting additional development. Groundwater in the Brazosport area is pumped primarily from the upper Chicot Aquifer. This aquifer is fully developed; further pumpage may increase saline intrusion. Wells have been developed in the northern part of the county, however, drawing from the lower Chicot and Evangeline Aquifers with yields as high as 4.8 mgd (TWDB, 1977). The total volume of water available from these aquifers without detrimentally affecting existing withdrawals cannot be determined without detailed data and field analysis. Wells developed in this area would require adequate spacing (at least one mile apart) to minimize the effects of aquifer drawdown.

Additional water, however, could be supplied by reuse of treated wastewater. A 90 percent return of tertiary treated process water would initially provide 18 mgd. Thus, if seven mgd were available from groundwater, a total of 38 mgd of process water could be supplied. This option would likely require upgrading of the waste treatment facility to full tertiary and would only be justified by shortages from other alternative supplies.

An adequate supply of water will be a critical factor in expanding development of the industrial site beyond the initial tenants. A reasonable possibility exists that Millican reservoir, an authorized project on the Navasota River tributary to the Brazos River, will be constructed. Yields from this reservoir would provide up to 140,000 acre-feet per year to the basin, assuring an adequate supply for future industrial development. Without completion of this reservoir, the most likely option would be to purchase existing water rights or surplus capacity presently diverted from the Brazos.

Cooling Water. The cooling water requirement of the initial industries would be approximately 110 mgd. Because of existing limitations on fresh water supply, the most feasible alternative is the diversion of cooling water from the harbor. This option is additionally advantageous in that it creates a net inflow through the harbor from the GIWW which would discourage stagnation of the canal water. A potential shortcoming of this concept is the susceptibility of the system to contamination during accidental spills. This problem can be at least partially alleviated by locating the intake conduit in the lower water strata, thereby maximizing the possibility that less dense pollutants can be isolated before entering the cooling system.

Discharged cooling water would be stored in an 120-acre reservoir located at the north site prior to release to the Brazos River. Retention time in the reservoir would be manipulated to obtain a reduction temperature comparable to that of receiving water. Water would be conveyed to the Brazos River through a gravity flow pipeline. The discharge point would be located approximately near the Highway 36 bridge.

The temperature of the Brazos River at this point ranges from 54°F in the winter to 93°F in the summer. The salinity range at this point varies from 6 ppt in the winter to 24.1 ppt in the summer (Seadock, 1974), compared to intake (GIWW) water salinity range from 7 ppt to 18 ppt. The discharge conduit should be located near the river bottom to ensure contact with the saltwater wedge.

The estimated discharge flow would be 150 cfs. requiring a 66-inch diameter pipeline. With a withdrawal rate of 170 cfs. the harbor water would be turned over on approximately a five-day cycle.

Raw Water Treatment. A water treatment plant with an initial capacity fo 25 mgd would be constructed on the north side. Provision for expansion of the facility as industrial demands increase would be included. The treatment process would include sedimentation, flocculation, chemical treatment, and deionization as necessary. Cost estimates for the facility are based on the assumption that the quality of all water sources will be equal to or better than that obtained from the Brazos River. Treated water would be stored in a ground reservoir or clear well and elevated tanks as necessary.

Waste Water Treatment. Wastewater and potentially polluted runoff collected from the immediate plant areas would be collected and conveyed to the waste treatment facility which is also located on the north side. Depending upon effluent restrictions, the facility would be designed to provide between secondary and tertiary treatment. A tertiary treatment plant would be more costly (see Figure 57) but would provide additional water for reuse. Depending upon the cost feasibility, supplementary recycled water may be critical for future development of the site if present water shortages continue. Initial capacity of the facility would be 25 mgd with provisions for expansion as needed.

Solid Waste Disposal. At present, the most realistic alternative for industrial solid waste disposal would be landfill. Existing industries in the area operate their own landfill sites. Permitted sites in the county total approximately 500 acres, although those have been designated primarily for municipal use. Depending on the impermeability of the substrate, a portion of the tract in the northeast corner of the study area could be reserved for landfill. It is estimted that a 75-100 acre site would accommodate solid waste from the primary tenants for approximately 10 years, based on 86,000 pounds per year generated per employee, a bulk density of 50 pounds/cubic foot (conservative) and a 10-foot disposal depth. If the waste had a bulk density of 100 pounds/cubic foot, this site would have twice the capacity.

A centralized system will help decrease solid waste disposal costs. Industry may also find it profitable to either salvage solid waste or incinerate. These alternatives can also be enhanced by a centralized collection and disposal system.

Pipeline Relocations. Available data sources indicate 10 pipelines, ranging in size from four to 30 inches in diameter, which cross the south site. Four of these lines cross the proposed channel and harbor alignment.

The routing of pipelines across the waterway would be similar to procedure currently employed at the GIWW. This involves excavating a trench across the canal with a dragline and laying the pipeline with an angled approach under the channel. The top of the pipeline should be 10 feet below channel bottom with at least a 12 foot set back from the channel edge at each side.

Relocation of Structures. The study site does not directly conflict with concentrated residential areas. However, topographic maps and aerial photographs indicate approximately 20 individual structures located within the project boundary. Where possible, residential structures would be relocated rather than purchased. Structures located within undisturbed buffer zone areas could be optioned for lifetime tenancy.

Rail and Highway Acess. Railroad service to the site could be provided by constructing a five-mile spur connecting to the Missouri Pacific line at Brazoria. An abandoned easement running from Brazoria to within 1.5 miles of the industrial site through the Clemens Farm could possibly be utilized. An additional two miles of main line would be required to access the harbor and waterfront industries. Spurs and sidings servicing individual tracts would be constructed according to industry needs.

The primary highway access would be from State Highway 36, entering both the north and south sites through the corridor west of Perry Landing. Additional access to the south site may be gained by upgrading S. F. Austin Road located south of the community of Jones Creek.

Administrative Services. Land for administrative facilities is allocated at the harbor entrance. The 25-acre site would include docks for service boats and maintenance barges and facilities for fire protection, spill control, and monitoring of waterway traffic. Land area would also be designated at this location for a public dock and service facility.

Administrative offices would be located on a five-acre tract near the site entrance.

Construction Procedures

The construction activities are separated into two phases. Phase 1 activities consist of site preparations, mainly earthwork, which must be completed before industrial plant construction begins. Phase 2 activities consist of support facility constructions which must be completed by the time the industrial plants are operational. Phase 2 activities begin immediately after Phase 1 completion.

Not all of the activities occur simultaneously or for the same length of time in either phase of construction. In some cases, the completion of one activity is necessary before another may begin. These temporal relationships are shown in the project schedule chart (Figure 56).

Phase 1

The first construction activities in Phase 1 are grouped as land-based excavation. Wooded areas at the location of the ponds and along the flood protection levee alignment in the north site would be cleared, stumped, and grubbed. This would be accomplished with a bulldozer and chain-saw crew. After vegetation removal, the fertile topsoil in both north and south sites would be stripped and stockpiled for subsequent use as coarse cover on levees and in final landscaping. Topsoil stripping and stockpiling will use a fleet of one bulldozer and six scrapers. Water holding ponds (raw water reservoir, waste water, and cooling water holding and treatment ponds) on the north site would be excavated by dozer and scraper. The excavated material would be used to build dikes around the ponds and the north site flood protection levee.

Various pipelines crossed by the canal route would be relocated concurrently with the topsoil stripping activity. A dragline would be used to expose the pipelines and to excavate a new trench next to the old pipeline alignment. The relocated pipeline would be sloped to a maximum depth of 25 feet msl and would have a bottom width 25 feet greater than the canal bottom width, allowing for future channel enlargement in both vertical and horizontal dimensions. The relocated pipeline would be anchored with thrust blocks where the pipeline changes grade. The old pipeline will be salvaged.

Spoil disposal area construction would take place concurrent with the construction of the water holding ponds. The dredge spoil site at the Gulf side of the GIWW would be constructed by draglines brought to the site by barge. A grader would assist in constructing the spoil containment levee. The disposal site levee at Station 2 would be constructed by land-based dragline and grader. The construction periods of the first two disposal sites would overlap by about three weeks. Disposal area 3 and 4 would be completed before subsequent land-based excavation proceeds, and would require a bulldozer and grader as well as six scrapers to excavate the site and to build the containment levee.

Dredging of the entrance channels and the initial two miles of the main channel (to Station 100+00) would start shortly after spoil disposal area 1 preparation is completed. A 24-inch cutterhead hydraulic dredge would be used. Approximately 2.3 million cubic yards of material would be discharged into the first three spoil containment areas in sequence as the dredge moves up the channel. Maximum pumping distance would be about 3,000 feet. Discharge from dewatering of the slurry would pass over a weirgate and into the dredged channel.

Redfish Bayou would be diverted before the remaining section of the channel excavation is completed. A bulldozer would build a diversion levee and grade an upstream containment pond. A dragline would trench the course of the diversion conduit, which would be lowered by crane into place. A sump pump would be installed at the lower end of the pipeline diversion. A levee on the south side of the channel route would protect the lower reach of Redfish Bayou from channel water overbanking. A concrete headwall on the upstream side of the northern levee would minimize levee erosion by the action of the ponded water.

The remaining length of channel would be excavated by both land-based and dredge equipment. Two tracvators would precede the dredge up the length of the channel, removing an estimated 400,000 cubic yards of relatively dry material between grade elevation and elevation two feet msl. This material would be hauled by a fleet of 10 trucks to the industrial site to raise part of the south site to a five foot msl grade and to provide material for containment levees enclosing 50 acre tracts. These tracts would receive slurry from channel dredging for site fill. Part of this excavated material will also be used at the Redfish Bayou diversion levee.

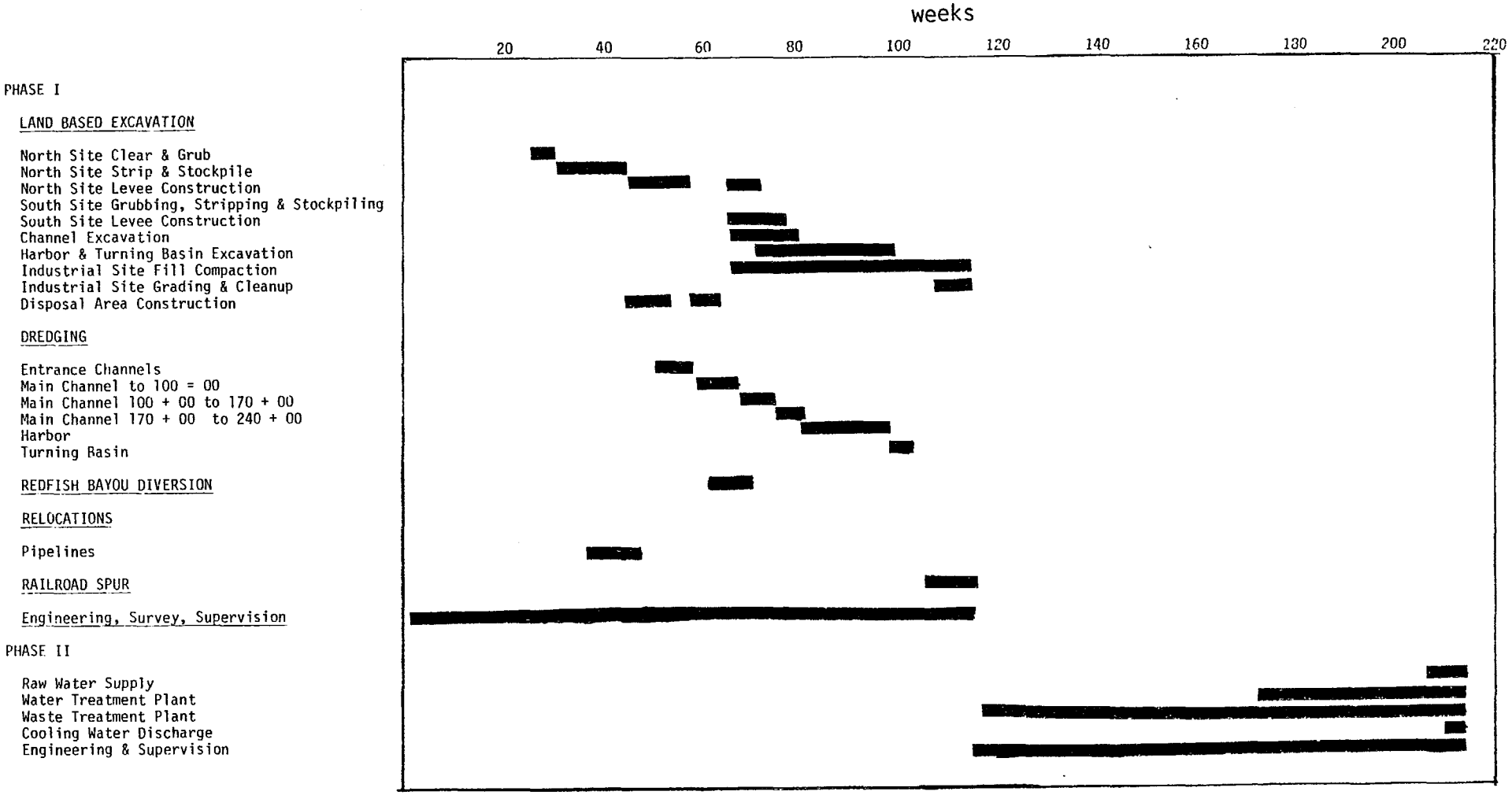

Figure 56

Inland Canal Project Schedule

Approximately 1.5 million cubic yards would be dredged from the channel between point 100+00 and the harbor. Pipelining distance for the slurry would be initially two miles, decreasing to under 3,000 feet as the dredge approaches the harbor. Delivery of roughly half of the slurry, 670,000 cubic yards, would be assisted by a booster pump station. The slurry would fill the prepared dewatering tracts in a rotational sequence to a one or two foot average depth. Disc harrows would be used to accelerate aeration and drying of the slurry. Compactors and sheepsfoot rollers would compact the fill. A new cycle of slurry fill, dewatering and compacting then follows. The outflowing water from the containment fill tracts would be channeled to the excavated channel.

Excavation of the harbor and turning basin would also involve both land-based and dredge equipment. As haul distances within the industrial site are less than that from the channel, scrapers and crawler tractors may be used instead of the tracvator and truck fleet. Excavation of the harbor and turning basin would remove 1.7 million cubic yards of relatively dry material to be used in levee construction around both north and south industrial site. The flood protection levee is estimated to require one million cubic yards. The remainder of the dry material would be used as additional site fill. One-way drainage culverts under the southern levee would be installed to allow monitored runoff from retention ponds to be constructed during final site preparation activites.

Dredging of the harbor and turning basin to project depth would remove 2.3 million cubic yards. The dredged material would be added to the south site 50-acre dewatering tracts, as described above. This fill would bring the overall south site elevation to 10 to 12 foot elevation msl, with an average compacted thickness of five feet. The dewatering and compaction activity would last approximately one year.

Final earthwork activities during Phase 1 would involve final grading of the north and south sites, preparing and installing drainage culverts to channel on-site runoff and retention ponds, and general site cleanup. Landscaping would include the distribution of the stockpiled topsoil; revegetation of levees, buffer zones, and administrative areas; and other surface stabilization such as spreading pea-gravel.

A final activity during Phase 1 would be to construct a railroad spur from Brazoria to the north industrial site. This activity would involve preparing the roadbed, laying the track and ties, and placing ballast.

Phase 2

The Phase 2 activities are not unique to the inland canal/industrial site postulation. The activities are comparable to any industrial complex construction which offers water supply and water and waste treatment facilities to potential industrial builders.

The construction of the waste treatment plant and water treatment plant would follow standard construction procedures, which need no elaboration here. Raw water supply involves the development of groundwater well field, installation of water mains from the well field(s) and from the surface water source, and the construction of a raw water pump station. The cooling water discharge activity involves laying a pipeline from the north site cooling water holding pond eastward along an alignment north of highway 36 to a discharge point at the Brazos River.

Phases 3 and 4

Phase 3 activities would include the construction of industrial plants such as a refinery and petrochemical plant. This construction is contracted by the tenant. Phase 3 activities may overlap in time with Phase 2 activities. Roads within the industrial site as well as utility hookups would be constructed during Phase 3, as required by the industrial tenants for their construction activities.

Phase 4 consists of long-term, future development of a 1,520 acre tract between the north site and the Brazos River Road. Phase 4 activities would include extension of the flood protection levee system; clearing, grubbing, and stripping of the site; and grading and stabilization of the land

Figure 57

Inland Canal/Industrial Site Project Summary

Work Item Number	Description	Major Equipment	Quantity/ Capacity	Contingency Factor	Cost $
Phase 1					
	Disposal Area #1	Dragline	89,000CY		267,000
2	North Site Clear & Grub	Dozer	323 acres		65,000
	North Site Levees	Scraper, Rower	1,056,000CY		1,069,000
	Stripping	Scraper	1,000,000CY		800,000
	Disposal Area #2	Dragline	139,000CY		417,000
	Disposal Area #3, #4	Scraper	169,000CY		313,000
	Channel Excavation	Tracvator	382,000CY		382,000
	Harbor Excavation	Scraper	1,114,000CY		724,000
	Turning Basin Excavation	Scraper	548,000CY		356,000
	South Site Levee Compaction	Roller	999,000CY		109,000
	Channel Drain Levees	Roller	125,000CY		25,000
	Harbor & Site Drains				450,000
	Compaction of Site Fill	Roller	5,473,000CY		1,001,000
	Site Cleanup	Grader, Dozer			30,000
	Sub Total			10%	5,741,000
3	Entrance Channels	Dredge	1,066,000CY		800,000
	Main Channel to Sta. 100+00	Dredge	1,194,000CY		836,000
	Sta. 100+00 to 170+00	Dredge with Booster	670,000CY		636,000
	Sta. 170+00 to& inc. Harbor		3,035,000CY		2,124,000
	Turning Basin		723,000CY		506,000
	Sub Total			10%	4,902,000
4	Pipeline Reloc.			25%	250,000
5	Redfish Bayou Diverson			25%	230,000
6	Engineering & Supervision			15%	1,030,000
7	Railroad Spur 5 mi. (unless funded by railroad company)				1,514,000
	Total Phase 1 Field & Engineering - Cost				13,934,000

Figure 57 (cont'd)

		Capacity	Contingency Factor	Cost $
Phase 2				
1	Brazos R. Pump Station	14 MGD	20%	180,000
	Raw Water Main		20%	1,354,000
	Well Field	9 MGD	20%	1,200,000
	Well Field Water Main		20%	1,045,000
	Sub Total			3,779,000
2	Water Treatment Plant	25 MGD	20%	5,020,000
	High Service Main		25%	806,000
	Sub Total			5,826,000
3	Tertiary Waste Treatment Plant	25 MGD	15%	25,000,000
	Wastewater Mains		25%	700,000
	Sub Total			25,700,000
4	Cooling Water Discharge Main	100 MGD	20%	1,140,000
5	Engineering & Supervision			2,920,000
	Total Phase 2 Field & Engineering Cost			39,365,000
	Tost Cost Phase 1 & 2			52,299,000

surface. These activities are comparable in procedure to those previously described as part of Phase 1.

Project Costs

Data Sources

The estimated costs of construction are based primarily on information current in the period October, 1976 to March, 1977. Cost data sources include: *Engineering News Record* (1976), *Building Construction Cost Data–1976* (Godfrey, 1975), and personal communication with the Texas Department of Highways and Public Transportation and with the U.S. Army Corps of Engineers, Galveston District. Unit costs for earthwork by land-based equipment are derived from production rates (Caterpillar Tractor Co., 1974). Unit dredging costs were provided by the Corps of Engineers, Galveston District. Various engineering firms, equipment vendors, and construction contractors provided both cost estimates and procedural information.

Scraper fleet production was estimated at 850 cubic yards per hour, tracvator production at 350 cy/hr, and fill compaction at 1,085 cy/hr. Dredge production for a 24-inch dredge operating in silty-clay substrates is assumed to be 1,000 cy/hr with pumping distances less than 10,000 feet. With longer pumping distances, a discharge line booster pump is estimated to add 25 percent to the unit cost of dredging and to decrease production rates to 660 cy/hr.

Volume of earthwork and dredge material handling is estimated with geometrical calculations of the channel, harbor, turning basin, levees, spoil areas, site fill, and of other components. Volume of dredge material slurry is estimated with a bulking factor of 1.3.

The site preparation schedule assumes a 10-hour work day and 15 net working days per month. The estimated dredging schedule assumes two 10-hour shifts daily, and seven working days per week. Scheduling of work between the north and south sites is coordinated to achieve temporally even personnel deployment and equipment use.

The construction period during Phase 2 for the major utilities is based on experiences of similar projects on the Texas coast.

Finally, a cost contingency factor of 10 percent to 25 percent was included in each estimate, varying with the reliability of the estimate.

Project Costs

The project activities costs, derived as discussed above, are presented in Figure 57. Phase 1 activities are grouped into seven work item categories. Levee construction of spoil disposal area 1, gulfward of the GIWW, is separated from other land-based work because of its location and different equipment requirements. The cost of the railroad is included, although in actuality it may be funded by the railroad company. The total Phase 1 project cost is $13.93 million.

Phase 2 activities are grouped in four contract categories. The design capacity and contingency cost factor for several of the Phase 2 activities are shown in Figure 57. Waste treatment plant cost is based on tertiary treatment to specify the maximum expense. The total Phase 2 cost is $39.37 million. The total Phases 1 and 2 project cost is $53.3 million.

Project Layout and Design References

Caterpillar Tractor Co. 1974. *Caterpillar Performance Handbook.*

Engineering News Record. August 5, 1976 and August 26, 1976. Unit Prices.

Godfrey, R. S., editor. 1975. *Building Construction Cost Data—1976.* Duxbury, Massachusetts: Robert Snow Means Company, Inc.

Hogue, C. 1977. Brazos River Authority. Personal Communication.

Lochmoeller, D. C. et al. 1975. *Industrial Development Handbook.* Washington, D.C.: the Urban Land Institute.

Patton Bill. 1977. Patton Towing Company. Personal Communication.

Sandeen, W. M. and J. B. Wesselman. 1973. Groundwater Resources of Brazoria County, Texas. Report No. 163. Texas Water Development Board.

Seadock, Inc. 1974. Environmental Report Summary. Texas Offshore Crude Oil Unloading Facility.

Texas Water Development Board. 1977. *Continuing Water Resources Planning and Development for Texas. Draft.* Phase 1—Planning Methods, Revised Estimates of Present Water Demand and Availability, Projections of Future Water Needs, and Identification of some Potential Sources of Water Supply for Use in Modifying and Amending the Texas Water Plan. Austin, Texas.

LEGAL/INSTITUTIONAL ANALYSIS

This section considers alternatives for financing the project and discusses the local, state, and federal requirements which will affect project development. Financing alternatives for both public and private entities are discussed. A survey of local, state, and federal requirements is included both for development of the canal and for industries which may locate at the site.

Navigation districts appear to be the most suitable public entity to sponsor an inland canal project. Private ownership could consist of either individual industries, a real estate development corporation, or an industrial consortium. The necessary federal and state permit requirements would be met with minimal difficulty to both inland canal developer and to user industries because of the comprehensive design of the project. Applicable governmental assistance programs for alleviation of adverse impact include the Coastal Energy Impact Fund, EPA and TWQB sponsored wastewater treatment works construction grants, Clean Air Financing Act funds, EPA water quality enhancement bonds, and Economic Development Administration Funds.

Public and Private Alternatives for Ownership, Financing, Construction, and Operation of an Inland Canal

Public entities with authority relevant to development of an inland canal include navigation districts, the Corps of Engineers, municipal corporations and county governments. The primary considerations in private development include various ownership organizations and their respective financing options.

The Public Sector

Navigation Districts. Most ports in Texas are governed by navigation districts, which are political subdivisions of the state. As political subdivisions, they possess numerous governmental powers, including that of eminent domain. Navigation districts generally fall into three categories, although some districts may cross category lines:

1. districts primarily concerned with construction, development, and operation of deep-water ports;

2. districts concerned with the development and maintenance of water channels that connect ports with the Gulf of Mexico and the Gulf Intracoastal Waterway; and
3. districts concerned with development of an area for water recreation and tourism. Buchanan, *Texas Navigation Districts and Regional Planning in the Gulf Coast Area,* 10 HOUS. L. REV. 533, 534 (1973).

Navigation districts may construct, develop, and operate facilities useful for or incidental to navigation. TEX. WATER CODE ANN. secs. 60.101, 61.151, 63.153 (1972). Chapters 60-63 of the Texas Water Code define the creation, operation, and authority of the districts. Although the authority held by a particular district varies according to the constitutional provision under which it was created, conversion statutes enable districts to take advantage of powers given to them under other provisions of the state constitution. TEX. WATER CODE ANN. secs. 60.241-.246 (1972).

Among the powers held by navigation districts is the authority to pass regulations pertaining to waterway traffic and policing of the port's facilities, to fix rates and fees for the use of port facilities, and to employ specific financial methods to defray operating costs and finance new structures or facilities. TEX. WATER CODE ANN. secs. 60.071, 60.103, 63.171 (1972).

The Texas Water Code is flexible in that it allows choices in the type of government framework for the individual districts. Navigation districts created under chapters 61 and 63 of the Texas Water Code may include two counties or parts of two counties within their boundaries. TEX. WATER CODE ANN. secs. 61.022, 63.023 (1972). Districts formed under chapter 62 may include three counties or parts of three counties. *Id.* sec. 62.022 (1972).

Three sources of funds are available to navigation districts: tax revenues, operating revenues, and long-term debt. Of the three, debt is the most important because it offers the large amount of capital necessary for port or waterway development.

Each port's gross operating revenue is a function of cargo volume, services provided, and charges levied. Services provided by Texas ports vary. All ports except Galveston may levy a tax for maintenance and operations. This is generally limited to $0.10 or $0.14 per $100 assessed valuation. TEXAS COASTAL AND MARINE COUNCIL, PUBLIC PORT FINANCING IN TEXAS 11 (1976). In some cases an unlimited tax for general obligation debt service is authorized, but taxes levied for this purpose may not be used for any other purpose. ETTER & GRAHAM, FINANCIAL PLANNING FOR THE TEXAS PORT SYSTEM 12-14 (1974).

Navigation districts may issue bonds to finance capital improvements when funds from operation and tax revenues are inadequate. Three types of bonds can be issued: 1) general obligation (tax) bonds, 2) revenue bonds, and 3) combination revenue and tax bonds. TEX. WATER CODE ANN. sec. 60.331 (Supp. 1976). Of these types, only revenue bonds may be issued without voter approval. *Id.* sec. 60.332 (Supp. 1976).

Revenue bonds may be secured by all or part of district revenues. Charges for services must be set at a level sufficient to meet principal and interest payments, as well as other bond requirements, and to pay designated expenses of the district. *Id.* secs. 60.338, 60.341 (Supp. 1976).

As a general rule, interest paid by the districts to bondholders is exempt from taxation under section 103 of the Internal Revenue Code. I.R.C. sec. 103, as amended by Tax Reform Act of 1976, Pub. L. No. 94-455, 90 Stat. 1520, *et seq.* This provision allows navigation districts and other political subdivisions to pay a lower rate of interest than would be required for taxable bonds. Industrial development bonds are taxed in some instances, but not in others. Reference should be made to current regulations and revenue rulings to determine the taxable status of particular projects. *Id.*

Although general obligation bonds must be approved by a general election within the dis-

trict, once the amount has been approved new bonds can be issued periodically until the approved indebtness has been reached. By requesting a larger indebtness than is immediately needed, a district can decrease the frequency of elections.

Navigation districts may also help finance installations for private industries. This is especially important in the financing of environmental improvements. An industry can guarantee revenue bonds to be sold by the district. The capital derived from the bond issue can then be used to construct a pollution control facility such as a waste treatment plant. The district can lease the facility to the industry, and the industry operates the facility. TEXAS COASTAL AND MARINE COUNCIL, PUBLIC PORT FINANCING IN TEXAS 21 (1976).

U.S. Army Corps of Engineers. The Rivers and Harbors Acts have cumulatively established the U.S. Army Corps of Engineers' responsibility for investigation, construction, operation, and maintenance of civil works projects for navigation, flood control, and related purposes. The Corps would require a local public sponsor to participate in construction of an inland canal. The local sponsor would be responsible for providing and maintaining an adequate public terminal and securing all land easements and rights-of-way.

The process of obtaining participation by the Corps begins with authorization from Congress to prepare a survey report. Appropriations for surveys are made to the individual Corps districts. The chief of engineers in each district allocates funds for the specific surveys.

After completing its investigation, the Corps submits its report to Congress. Congressional committees hold hearings on proposed projects. After completion of the hearings, Congress may authorize a number of projects in a single bill.

Authorization does not guarantee funding, however. Congress has a substantial backlog of authorized projects that go unfunded. ENVIRONMENTAL LAW INSTITUTE, FEDERAL ENVIRONMENTAL LAW 861-865 (1974).

As an example of the time schedule involved, the Corps has prepared a model of the "typical" project. This typical project requires four years and nine months from authorization of a survey to funding of the investigation. Four years and 10 months may pass before the survey report is prepared. Processing of the report prior to project authorization and funding may take over a year. Other conditions, such as the need for advanced engineering and design work, may lengthen the time period. THE CIVIL WORKS PLANNING CONTINUUM, REPORT OF THE TASK FORCE ON CIVIL WORKS PLANNING (1971). According to the Corps representatives, an inland canal project of the magnitude indicated in the conceptual design would require a minimum of 10-11 years from authorization of initial study to funding for construction.

Municipal Corporations. Municipal corportations are authorized to construct navigational facilities, such as harbors, docks, and wharves. Home-rule cities may issue bonds for capital improvements in the amount fixed by the charter. TEX. REV. CIV. STAT. ANN. art. 1175(10) (1963). Cities and towns with a population in excess of 5,000 are authorized to issue tax and revenue bonds for navigational improvements. TEX. REV. CIV. STAT. ANN. art. 1187f (1963), as amended, (Supp. 1976). Bonds payable from ad valorem taxes cannot be issued without authorization by a majority of the voters.

Counties. Texas counties have been granted the authority to issue bonds to acquire rights-of-way and spoil disposal areas for canals and waterways authorized by Congress. TEX. REV. CIV. STAT. ANN. art. 822a (1964). Issuance of the bonds requires an election.

Coastal counties are authorized to acquire rights-of-way and spoil disposal sites by eminent domain, and to issue time warrants at six percent interest to pay the cost of acquisition. *Id.* art. 822c (1964). County authority is rarely used, however, because navigation districts and the State

Department of Highways and Public Transportation have similar authority to acquire rights-of-way and spoil disposal areas by eminent domain. TEX. WATER CODE ANN. secs. 61.120, 61.161, 62.106, 63.155, 63.156 (1972); TEX. REV. CIV. STAT. ANN. art. 5415e-2 (Supp. 1976).

The Private Sector

There are many forms of business organizations applicable to development of an inland canal. The optimal organizational structure will depend on the capital requirements, tax advantages and investment objectives involved. Ownership would likely consist of industries planning to locate at the site, a real estate development corporation, or a development syndicate.

Private financing of the project could take one or a combination of three basic forms: unsecured debt, secured debt, or equity. Secured debt differs from unsecured debt only in that specific property or revenues are pledged as collateral to insure the repayment of the debt.

Debt of a corporation, whether secured or unsecured, is often represented by bonds. Bonds are securities which are sold by an organization, usually through dealers, for a face value and which are repaid on a fixed date. Interest on bonds is normally paid periodically, one or more times per year. Bonds may be secured by particular property or revenues or by the assets of the issuer. The type of bonds issued depends in part on the schedule of revenues from the project. Series bonds are often used when revenues will be produced gradually and when there is no need for additional financing during that time. Term bonds may be used when either the revenues to pay off the bonds will be concentrated toward the end of the bond term or when revenues will be used to finance additional projects.

Equity for the project could be paid in by the participants in a syndication or development corporation. Other sources of equity including use of existing capital, issuance of securities, or by personal loans. Both personal loans and debt securities are more properly classified as debt than as equity although they may be used free up equity capital committed to other projects.

Other Considerations

Services such as security, fire protection, maintenance of common areas, spill prevention and clean up, and maintenance of roads could either be provided by a public or private developer, or provided separately by each tenant. The economies of scale suggest that some or all of these services provided by a single source for all project industries would be a more attractive approach. The developer could provide the services and charge the industries accordingly or the tenants could form an association to finance and manage the services. Some services (fire protection, spill prevention) might be mandatory to the industry while others (security of individual plants) might be optional.

Taxes on common areas could be paid by the developer with the industries agreeing to reimburse their *pro rata* shares. Ownership of the common areas could also be included in ownership of the individual plant sites, with taxes and other expenses assumed by the tenant. This alternative would require restrictions against development in designated areas (e.g. buffer zone) established in the deed.

In the event that a private entity is the developer of the project, it may be advantageous to form a special governmental district to provide the services described above. Some of these special districts are described in chapters 50 through 57 of the Texas Water Code. Types of districts which may be established include: water control and improvement districts, freshwater supply districts, municipal utility districts, water improvement districts, drainage districts and levee improvement districts. In addition to these general law districts, article XVI, section 59 of the state constitution provides for the creation of other special districts by the legislature.

Summary

If an inland canal project were publicly owned and financed, the navigation district would have unique advantages including the authority to finance the project by revenue, debt, and bonds.

The ability to finance pollution control facilities in conjunction with industry is also an important factor.

Construction of the canal by the Corps of Engineers would be feasible only if project scheduling can accommodate the required time period for authorization and funding.

Private ownership and financing could be accomplished by either the individual industries planning to locate at the site, a corporation, or a development syndicate. The creation of a special governmental district to provide common services at the site may be advantageous.

Additional considerations relevant to these alternatives are discussed in the economic feasibility analysis.

Regulatory Authority Affecting the Construction and Maintenance of an Inland Canal

This section discusses the federal, state, and local permitting regulations which would apply to construction of an inland canal and the industries which locate there. The primary permits required for the inland canal project include:

1. U.S. Army Corps of Engineers "Section 10" and "Section 404" permits.
2. Environmental Protection Agency NPDES permit.
3. Texas Water Quality Board waste control order.

Additional permits may be required from the Parks and Wildlife Department, Texas Antiquities Committee, General Land Office and School Land Board. An environmental impact statement may be required for the Section 404 permit.

The industries which locate at the site will also be required to obtain state and federal water and air quality permits. Many of the permits typically required for industrial site development would be obtained by the project sponsor for construction of the canal and major utilities.

Federal Regulatory Authority

U.S. Army Corps of Engineers. The U.S. Army Corps of Engineers has extensive authority over activities occurring in or affecting navigable waters. Statutory authority requires an entity who wants to construct, reconstruct, or conduct major renovation of a structure in, on, or under a navigable water to obtain a permit from the Corps. 33 U.S.C.A. sec. 403 (1970). The Corps also requires a permit for the construction of a channel or upland canal connection to navigable waters. 33 C.F.R. sec. 209.120(g)(11) (1975).

Corps authority over the discharge of dredged or fill material has been supplemented by the Federal Water Pollution Control Act Amendments of 1972 (FWPCA) 33 U.S.C.A. sec. 1251 *et seq.* (Supp. 1977). Section 404 of this act (33 U.S.C.A. sec. 1344) (Supp. 1977) provides that the Corps must regulate the discharge of dredged or fill material into navigable waters by a permit system. Under this law, the Corps will evaluate the inland canal project with respect to potential alteration of wetland areas.

Corps permits for a project of the magnitude of an inland canal will require a public hearing and circulation of the application of all interested state, federal, and local agencies for their comments. The Texas Water Quality Board will have to certify dredging, dredged material disposal, and stream channel diversions before the Corps may issue the permit.

U.S. Fish and Wildlife Service. The U.S. Fish and Wildlife Service (USFWS) has the following major responsibilities in the coastal area:

1. Enforcement of federal regulations and statutes pertaining to the protection of fish, migratory birds, and certain marine mammals (16 U.S.C.A. sec. 757a *et seq.* (1974), as amended, (Supp. 1977); 701 *et seq.* (1974), 1361 *et seq.* (1974), as amended, (Supp. 1977);
2. Review of all federal water use projects and those water use projects requiring federal permits to determine effect on fish and wildlife (16 U.S.C.A. sec. 662 (1974));
3. Establishment and maintenance of national wildlife refuges (16 U.S.C.A. 668 dd (1974), as amended (Supp. 1977)); and
4. Provision of federal funds to states for fish and wildlife restoration projects (16 U.S.C.A. sec. 669 *et seq.* (1974)).

The Fish and Wildlife Coordination Act provides that federal agencies must give adequate attention to the wildlife consequences of water use projects. 16 U.S.C.A. sec. 662 (1974). The USFWS, along with the National Marine Fisheries Service, and the Texas Parks and Wildlife Department must be consulted. The major objections which could be raised in the inland canal can study would include the effect on migratory bird habitat (particularly as related to nearby wildlife refuges) and assurances of adequate wetland protection during dredging and spoil disposal operations.

Compensatory mitigation requirements may also be recommended by both federal and state fish and wildlife agencies for certain projects. Under these requirements, "mitigate" has been interpreted as means which should be taken to diminish the impact of a project. "Compensation" in this context is the provision of additional land for fish and wildlife habitat. If compensatory mitigation is required, project cost for an inland canal would include the provision of an acre of similar habitat dedicated in perpetuity for every acre of habitat adversely affected. In terms of the conceptual site plan indicated in Figure 45, the project would directly alter approximately 20 acres of wetland at the GIWW entrance and a similar amount in the Redfish Bayou diversion.

The USFWS will also determine the presence of endangered plant or animal species in the project area which are protected in regulations promulgated under the Endangered Species Act. 16 U.S.C.A. sec. 1531 *et seq.* (1974), as amended, (Supp. 1977). Endangered species located in Brazoria county are Attwater's prairie chicken, the southern bald eagle and red wolf. The southern bald eagle has been observed north of the study area.

National Environmental Policy Act. Under the National Environmental Policy Act (NEPA) an Environmental Impact Statement (EIS) must be prepared for "major federal action significantly affecting the quality of the human environment." 42 U.S.C.A. sec. 4332(c) (1973). Most federally funded projects or projects for which federal permits or licenses must be issued, are considered federal actions. An EIS would probably have to be prepared to obtain a section 404 permit for the inland canal in the case study and if federally sponsored dredging and discharge of dredged materials were involved.

State Regulatory Authority

General Land Office and School Land Board. Management of Texas coastal public lands is shared by the commissioner of the General Land Office (GLO) and the School Land Board (SLB).

The SLB regulates the leasing of state lands covered wholly or partially by the waters of the bays or other arms of the sea. These lands may be leased to navigation districts for uses reasonably related to navigation. TEX. WATER CODE ANN. secs. 61.116, 61.117 (Supp. 1976). The SLB may also grant easement rights to the owner of adjacent littoral property authorizing construction on coastal public lands.

An easement for construction of an inland canal would be required for coastal public lands located between the point of departure at the GIWW and the upland segment of the channel. This requirement would be more significant in a bay approach than a location with uplands adjacent to

the GIWW as encountered in the case study. Maximizing the use of existing access channels, upland dredged material disposal sites, upland channel alignment to minimize disruption of drainage flows, minimized disruption of productive wetland areas, and provision for waterfront access via a central channel are features of the inland canal concept which should favor granting of an easement by the SLB.

Parks and Wildlife Department. The Parks and Wildlife Department (P&WD) authority relevant to an inland canal may be divided into two categories: 1) regulation of fish and wildlife resources, and 2) regulation of dredging. In the first category, the most significant responsibility pertaining to construction and maintenance of a canal is P&DW's review and comment authority under the federal Fish and Wildlife Coordination Act. In the second category, the most important factor is P&WD's permit program for the removal of marl, sand, shell, and gravel from the public waters of the state. Although a P&WD permit is normally required for dredging, a permit is not required for "1. dredging incidental to and reasonably necessary in construction of state or federally authorized navigation projects, or 2. work of a lessee of the School Land Board necessary to carry out the purpose of his lease." TEX. NAT. RES. REPT., *Parks and Wildlife Department Commentary* 1 (Jan. 1977). The proposed inland canal would presumably fall under one or both of the exceptions, therefore eliminating the need for a permit.

Texas Water Quality Board. As discussed previously, the Texas Water Quality Board (TWQB) must certify that a proposed discharge will meet requirements of the FWPCA before a federal permit can be issued. The U.S. Army Corps of Engineers cannot authorize the discharge of dredged or fill material into United States water in Texas without certification or waiver by TWQB. 33 U.S.C.A. sec. 1341 (Supp. 1977).

TWQB approval for an inland canal project would pertain to such activities as dredged material disposal and stream channel diversion. Strict control of dredged material discharge and containment of the effluent within the dredged area should minimize TWQB objections. Other project aspects which would be reviewed include runoff control in the site area and cooling water and wastewater discharges.

Antiquities Committee. The Antiquities Committee is responsible for historical and prehistorical landmarks in Texas. TEX. REV. CIV. STAT. ANN. art. 6145-9 (1970), as amended, (Supp. 1976). A person may not damage, alter, or remove a protected artifact without a permit or contract from the committee. Antiquities Committee Rule 355.01.00.001.

An historical survey is normally included in the environmental assessment required in preparation of the environmental impact statement for a proposed project. If any artifacts are found, the developer is required to obtain a permit from the committee and to protect, preserve, and, upon occasion, restore the discovered artifacts.

The Advisory Council on Historic Preservation, a federal body charged with commenting on projects that may affect a property listed in the National Register, works very closely with the Antiquities Committee. 16 U.S.C.A. sec. 470i (1974), as amended, (Supp. 1977).

Recent surveys performed in the case study area indicate the presence of archeological/historical sites. Although none of the sites are believed to be altered by the designed project, preservation and/or relocation would be required for one structure located inside the flood protection levee.

Local Regulatory Authority

Depending on the specific site location, construction and operation of an inland canal may be regulated by numerous local governments, including special districts such as navigation districts or municipal utility districts.

An inland canal site located in proximity to a municipality would likely be annexed. Development within the extraterritorial jurisdiction of a municipality cannot be incorporated.

Private interests in the project will be subject to *ad valorem* taxes levied by school districts, the county, junior college district, navigation district, and drainage district.

Regulatory Authority Affecting Industrial Development Along the Canal

Industry will be attracted to the inland canal primarily by the access to water transportation and the availability of water for cooling purposes. Among the primary tenants of the canal are refineries and petrochemical plants. Although the industry's decision to locate on the canal has much to do with the canal itself, the location must also meet other requirements, such as adequate waste disposal facilities. The feasibility of these facilities depends in part on the regulatory framework.

The inland canal concept offers an advantage to industry in that the major permits for construction, operation, and maintenance of the channel and waste disposal system will be secured by the developer. This process can also include a preliminary screening of permits required by the tenants.

The following discussion will outline the primary federal, state, and local regulations affecting industrial development.

Federal Regulatory Authority

Environmental Protection Agency. The EPA is the federal agency charged with the regulation of air and water pollution. Two applicable statutes, the Clean Air Act, 42 U.S.C.A. sec. 1857 *et seq.* (1969), as amended, (Supp. 1977), and the Federal Water Pollution Control Act, 33 U.S.C.A. sec. 1251 *et seq.* (Supp. 1977) authorize the states to conduct much of the regulation subject to EPA review.

Permits must be obtained from both the EPA and the Texas Water Quality Board (TWQB) before a discharge of pollutants can be made from a point source. In addition, the TWQB must certify that the proposed discharge is in compliance with sections 301, 302, 306, and 307 of FWPCA.

The requirements of the NEPA apply to the EPA's issuance of a discharge permit. Therefore, an EIA would have to be prepared for a facility such as a wastewater treatment plant.

The "208" program is a federally funded program for areawide waste treatment management planning. 33 U.S.C.A. sec. 1288 (Supp. 1977). The program is in its early stages, so prediction of what effects it will have on the inland canal project is difficult. The waste treatment facilities for the project may be integrated with nearby facilities to form an areawide waste treatment system. Also, the 208 program may result in non-point source pollution regulations that will affect the project. The design features of the inland canal which minimize non-point source pollution with runoff retention ponds and control levees are expected to conform with these regulations.

Oil and hazardous substances spills are also within the EPA's jurisdiction. 33 U.S.C.A. sec. 1321 (Supp. 1977). The EPA maintains a list of hazardous substances and shares enforcement of the spill laws with the U.S. Coast Guard. Spill control levees within the industrial site and containment facilities in the harbor would be necessary for compliance.

The EPA's primary responsibility in combatting air pollution is to establish the standards that will be used at the state level to regulate air contaminants. Nevertheless, it does have original permitting authority over hazardous air pollutants. 42 U.S.C.A. sec. 1857c-7 (Supp. 1977). A list of these air contaminants is maintained by the EPA's administrator. An entity cannot construct or

modify a stationary source of a hazardous pollutant without receiving a permit from the administrator. 40 C.F.R. sec. 61.

State Regulatory Authority

Texas Air Control Board. The Texas Air Control Board (TACB) issues permits for both construction and operation of a facility. A person who wants to build or modify a facility which may emit air contaminants must obtain a permit from the TACB before starting construction. TEX. REV. CIV. STAT. ANN. art. 4477-5, sec. 3.27(a) (1976).

An operating permit from the TACB must be obtained within 60 days of the beginning of operations. *Id.* sec. 3.28 (1976). TACB may extend this limitation if start-up or testing of the facility requires more time.

A variance may be granted by the TACB to a facility in order to allow the facility to operate outside usual TACB requirements. The TACB will not grant a variance unless there is adequate proof that denial of the variance will result in an arbitrary and unreasonable taking of property or the closing of a business without a corresponding public benefit. *Id.* sec. 3.21 (1976). Detailed criteria which are used by the TACB in deciding whether to issue a variance or other permit are listed in the TACB Rule 131.08.00.003.

The TACB's State Implementation Plan must conform to EPA standards. Development in industrialized areas of Texas may be more costly and difficult in the future because of the EPA's new "offset" policy, which requires that existing pollution sources in an Air Quality Maintenance Area must be reduced before new sources will be permitted. 41 Fed. Reg. 55,524 (1976). This policy may present a unique obstacle to the inland canal concept because of the concentration of emissions in the development site.

Texas Water Quality Board. The TWQB is the lead agency in Texas for matters relating to water quality. Although the TWQB plays an important role in the federal certification process discussed above, it administers an extensive state permitting system as well.

The TWQB issues three types of waste control orders: 1) regular waste control order; 2) waste disposal well waste control order, and 3) industrial solid waste order. TWQB Rule 130.01.30.002. Any or all of these permits may be required by a particular industrial development but the first and third types are more likely to be needed than the second type.

In addition to issuing waste control orders, the TWQB must approve plans and specifications for sewage systems for the treatment and disposal of industrial liquid wastes before construction can begin. TEX. WATER CODE ANN. secs. 21.086, 21.707(d) (1972), as amended, (Supp. 1976). Water control districts are exempt from obtaining TWQB approval if they obtain Texas Water Rights Commission approval instead. TWQB Rule 130.01.62.001(b). TWQB approval is required, however, for any sewage disposal plans of water districts if state or federal funding is involved.

Major permits for the waste treatment facility would be secured by the inland canal developer. Provisions for tertiary treatment should ensure compliance although individual discharge permits would still be required by industries using the facility.

The clean up of spills of oil and hazardous substances in or adjacent to the waters of the state is regulated by the state *Oil and Hazardous Substances Pollution Contingency Plan,* prepared by the TWQB. TWQB Rule 130.09.01.002.011. TWQB is also responsible for administering the Texas Coastal Protection Fund, which is used to pay for clean-up oil and other spills when the costs cannot be recovered from the responsible party or the federal government. TEX. WATER CODE ANN. sec. 21.805 (Supp. 1976). While the party responsible for the activity or facility from which an oil spill occurs is responsible for containment or clean-up, it would be advisable for the project developer to set up a spill clean-up and control service. Costs could be paid by user fees, or recovered from the responsible operator.

Local Regulatory Authority

If the inland canal is within the boundaries of a municipality or special district, associated industrial development will be subject to local regulation. Special districts such as water control and improvement districts may regulate sewer systems. TEX. WATER CODE ANN. sec. 51.127 (1972).

Municipalities may regulate utilities within their boundaries. TEX. REV. CIV. STAT. ANN. art. 1446c (Supp. 1976). Utilities outside corporate limits are regulated by the Public Utility Commission (all utilities except natural gas) and the Railroad Commission of Texas (natural gas). *Id.*

If the inland canal is within a city's corporate boundaries, development must also conform to zoning ordinances, building codes, and other restrictions. Also, coastal counties have the authority to implement land use regulations to restrict the development of land to minimize flood damage. TEX. REV. CIV. STAT. ANN. art. 1581e-1 (Supp. 1976). Therefore, developers in the floodplain may have to meet special building standards.

Governmental Programs for Alleviating Adverse Impacts of the Project

There are several governmental assistance programs which may be applicable in alleviating the adverse environmental, social and economic impacts of an inland canal development. Particularly relevant federal government programs provide assistance in the areas of housing, water supply, wastewater treatment, waste disposal, solid waste collection, crime prevention, fire protection, recreation facilities, health facilities, education facilities, and coastal energy-related impacts, among others. Most of these federal programs are administered by state agencies. State funded programs provide assistance in highway construction and maintenance, water supply, wastewater treatment, health, recreation, education, and other areas. These programs are generally designed to supplement local funds. In addition to these specific programs, virtually unrestricted federal revenue sharing funds are also available.

An authoritative discussion of the specific governmental programs which might be of assistance in alleviating the adverse impacts of the canal project is constrained by the restrictions and conditions of various programs. The regulations which govern the availability of assistance, as well as the specific amounts of assistance available change frequently. The Texas Department of Community Affairs (TDCA) is the state agency which catalogs and coordinates the various state and federal assistance programs. The TDCA should be consulted by the affected communities as the project planning continues to determine what types and amounts of assistance may then be available. At the federal level, the Federal Regional Council (FRC) is responsible for coordination.

Interpretation

On the basis of the project feasibility analysis the inland canal concept would be expected to more easily comply with applicable developmental regulations that do traditional industrial navigation developments. The noteworthy inland canal design provisions which minimize the adverse environmental impacts associated with traditional developments include:

1. minimal wetland alteration,
2. upland disposal of dredged material,
3. runoff control,
4. minimal disturbance of surface drainage patterns, and
5. contained turbidity during canal dredging.

As determined in the Environmental Impact Analysis (see Chapter IV), factors which would receive particular attention in the permit review process for the case study project include:

1. the potential for disruption of drainage at the Redfish Bayou diversion,
2. the protection of migratory bird habitat in adjacent National Wildlife Refuges,

3. the disruption of approximately 40 acres of wetland located at the south entrance channel and upper Redfish Bayou areas, and
4. the potential for alteration of surface runoff sheet flow conditions to point source directionalized flow.

The environmental effects are considered to be of less magnitude and importance than those which would be encountered in the typical traditional navigation development, and thus would likely be favored by regulatory agencies. This postulation is further investigated in a comparison between the impacts of the inland canal concept and traditional alternatives documented in Chapters IV and V.

The inland canal concept also appears to offer relative advantages in an industrial operation context. The development of the project as a single planned unit would relieve the individual tenants of the responsibility for securing permits for construction and maintenance of the access channel, berths, and major utilities. Individual industrial operating permits would be required, although a preliminary investigation of the features necessary for compliance could be performed by the project developer. Operating restrictions are generally not expected to significantly differ between an inland canal-type development and other industrial sites. One possible exception is meeting air quality maintenance restrictions. Less concentrated industrial developments with dispersed emission sources may more easily meet air quality requirements. However, this issue may be resolved in part by incorporating emissions reduction technology through public financing of pollution control facilities.

ECONOMIC FEASIBILITY ANALYSIS

The conomic feasibility analysis consists of two parts. First, the project costs (see Figure 57) are compared to the present market for industrial development land with similar features. In the second part, the project cost feasibility is tested in a cash flow and rate of return analysis.

The results of this analysis indicate that the financing of land purchase, canal construction, and site preparation would be a profitable venture for the private investor. Utility services construction would have only a marginal return on investment as a private venture. Public financing of the project would be feasible, and would be desirable for the utility system.

Market Comparison

The comparison between the project costs and the existing industrial land market reveals that raw land in the Brazosport-Houston-Galveston area is generally more expensive than other coastal locations. Unimproved land prices in the study vicinity range from $1,000 to $3,000 per acre, according to local realtors. Similar land in the lower coast and Beaumont-Port Arthur areas would be slightly lower, ranging from about $500 to $2,000 per acre. Unimproved industrial land between the study site and Houston ranges from $3,000 to $5,000+ per acre.

Costs for land improvements vary with industry needs. A general survey of industry representatives indicate that a competitive price for full-service industrial land in the Houston-Brazosport area would range from $10,000-$15,000 per acre. Land prices at Bayport, an industrial development offering improvements comparable to the project design, range from $16,000 to $39,000 per acre. Bayport's waterfront land, however, is serviced by a channel of 40 foot depth. Their representatives suggest that comparable land with barge-water access would sell in the $8,000 to $10,000 range.

A generalized comparison to the project costs indicates that approximately 10,000 acres in the study site could be purchased for an average of $2,000 per acre. Improvements to provide full utilities, navigation, rail and highway access, and flood protection would cost approximately $60,000,000. Thus the land purchase and initial site preparation plus initial utility developments represent an investment of approximately $12,000 per acre with net salable land of 7,100 acres. Although a more extensive market analysis would be required for a refined comparison, these pro-

ject costs appear to compare favorably with the existing market. This conclusion will be further tested in the cash flow and rate of return analysis.

Cash Flow and Rate of Return Analysis

This aspect of the feasibility analysis is used to determine the profitability of an investment in an inland canal and industrial site. The process for determining feasibility involves estimating a cash flow over the life of the project and a rate of return on the investment.

As determined in the conceptual design, the project is divided into two phases or stages. In Stage I, the canal, industrial site fill, levees, reservoirs, railroad and pipelines will be constructed. Development expenses for this stage will occur in years 1, 2, and 6. Construction of the water and wastewater systems are included in Stage II. These expenditures occur in years 3, 4, and 6. Revenues from land sales in Stage I begin the first project year. Revenues from Stage II utility services start in year 5.

The analysis is presented both with private and public financing. This provides an indication of the profitability of the project for the private investor and the potential decrease in cost to the tenant if publicly financed. In addition, project Stage I investments (land purchase, construction of the canal and site preparation) are presented both as separate from Stage II (utility construction) investments and with Stage II investments as a combined investment. This indicates that the relative feasibility of each Stage, the potential desirability of a combined public/private investment, and the profitability of a total Stage I and II investment.

The primary variables in the cash flow analysis are the projected annual absorption sales rate on the effective retail acreage and the retail sales price per acre. The return provided by these estimations compared to the land investment and land development costs determines the project cash flow. The actual absorption rate and sales prices would be determined by projections based on an analysis of the local and regional market. For purposes of this analysis, a declining absorption rate and appreciating land values are assumed (see Carestio, 1971; Thorne, 1971) patterned generally on the rate at which initial tracts would be available for occupancy, the completion of utility services, and future development phasing.

The rate of return is calculated according to the method of Lochmoeller, et al. (1975) using present worth values at the midpoint of the year. Rate of return is calculated separately on a free and clear basis and on equity after financing.

Private Financing

Stage I. The cash flow and rate of return analysis for private financing are based on the following assumptions:

1. Of the 9,777 acres to be purchased for the project, a net of 7,109 acres are available for sale. It was assumed all would be sold.
2. The total land cost is $20 million. The acreage prices range from $500 per acre to $3,000 per acre and average $2,045 per acre.
3. Financing would be a $13.5 million loan with an interest rate of 10 percent. The principal will be repaid through payments of $2,800 per acre after sale of the first 1,500 acres. An acceleration factor in the release payments of approximately 16 percent was applied.
4. Development of the project was predicated upon firm purchase commitment by the refinery and petrochemical industries. The lower price per acre for their waterfront sites reflects their early commitment and purchase of large tracts.
5. Acreage prices are intended to compare with other full-service industrial parks. Waterfront acreage is approximately 50 percent more costly than non-waterfront; prices escalate over time.

6. Rate of land sales (as a percentage of total) is based on historical patterns, although the total number of years to full occupancy could vary.
7. The seven percent sales expense represents commissions to external sales efforts.
8. The expenses of development and engineering are indicated in the conceptual design. Engineering and contingency expenses are expected through the project life.
9. Real estate taxes are based on an average assessment of $1,000 per acre. The accumulated tax of $18 per acre is based on the rates of the various taxing authorities in Brazoria County as listed by Seadock (1974). Taxes on undeveloped land (e.g., the buffer zone) will continue beyond the absorption period.
10. Direct overhead includes the project owner's development and management staff.
11. Cost of promotion and signs includes internal sales effort in advertising and seeking tenants.
12. Other costs include legal fees, auditing, etc.
13. Management fees account for head-office expenses in the parent corporation(s).
14. Annual interest payments are based on one year's interest on the remaining balance after the release payment is made and one-half year's interest on the release payment.
15. A short-term loan at 12 percent interest would be used to meet the deficit shown in the second year, and would be repaid in the third year.

Cash Flow. A cash flow for Stage I, construction of the canal and site preparation, on a 10-year project life is shown on Figure 58. It is assumed that $13,500,000 of the $20,000,000 purchase price is borrowed at a 10 percent interest rate. The $6,500,000 equity would be provided by corporate capital, sale of stock or personal loans. Revenues are based on completed land sales for the initial waterfront tracts (south site) between years four and five and sale of the north site tracts would begin in year six. The loan is to be repaid as land is sold in payments of $2,800 per acre. Payment is deferred on the first 1,500 acres to ensure adequate intial development funds.

Land development costs for the first (south) tract are incurred in years one and two. The second (north) tract development costs occur in year six.

Because the majority of development costs occur in year two, a deficit is realized requiring an additional short term loan. This loan is repaid in year three.

Return on Investment. The present value of the net cash from sales (free and clear) was calculated at a variety of discount rates. The rate at which the sum of the present values equals the $20,000,000 purchase price is 19 percent before taxes. The present value analysis at 19 percent is shown on Figure 59.

The Stage I return on equity shown in Figure 59 was calculated in the same manner. The rate at which the sum of cash after financing equals an investment of $6,500,000 is 30 percent before taxes.

Discussion. A 19 percent rate of return on a free and clear basis and a 30 percent rate of return on equity indicate that Stage I of the project may be a feasible investment for the private sector. A more refined analysis, however, would lend more certainty to the absorption rate and pricing schedule as well as include a profit and loss statement to account for taxable income.

A simplified sensitivity analysis on the rate of return would assume that the input data could either be 25 percent too high or too low. Reevaluating the rate of return with this margin of error indicates a range from 14.25 to 23.75 percent return on net cash and 22.5 to 37.5 percent return on equity.

Figure 58

Cashflow Stage 1 Private Financing

Given Data:

Gross Acres 10,000
Net Salable Acres 7,109
Purchase Price $20,000,000
Market Proj. 100% sold

Financing Assumptions:
Mortgage $13.5 million
Interest 10%
Releases $2,800/Acre after 1,500 Acres
Equity $6.5 million

	years				
	1	2	3	4	5
Marketing:					
Acres Sold	1,500	700	850	800	750
Price per Acre	8,000	12,500	12,500	8,000	8,250
Gross Revenue	12,000,000	8,750,000	10,625,000	6,400,000	6,187,500
Less Sales Expense @ 7%	840,000	612,500	743,750	448,000	433,125
Net Proceeds:	11,160,000	8,137,500	9,881,250	5,952,000	5,754,375
Expenses:					
Land Development	3,281,000	9,523,000	-0-	-0-	-0-
Engineering	550,000	490,000	40,000	25,000	25,000
Contingency	250,000	250,000	100,000	75,000	75,000
Real Estate Taxes	128,000	115,000	100,000	85,000	71,000
Direct Overhead	200,000	200,000	150,000	100,000	100,000
Promotion &Signs	200,000	200,000	75,000	75,000	75,000
Other	60,000	60,000	40,000	40,000	40,000
Management Fees	75,000	75,000	75,000	75,000	75,000
Total Expenses	4,744,000	11,013,000	580,000	476,000	461,000
Net Cash From Sales (free and clear)	6,416,000	(2,875,500)	9,301,250	5,477,000	5,293,375
Financing	13,500,000				
Release Payments	----------	1,360,000	2,380,000	2,240,000	2,100,000
Interest	1,350,000	1,252,000	1,035,000	804,000	587,000
Total to Lender	13,500,000	3,212,000	3,415,000	3,044,000	2,687,000
Net Cash After Financing	5,066,000	(6,087,500)	5,866,250	2,433,000	2,606,375
Short Term Note		1,021,500			
Principal Payment			1,021,500		
Interest @ 12%		61,290	64,970		
Total to Lender			1,147,760		
New Net Cash, Yrs. 2 & 3		(5,066,000)	4,718,490		

Figure 58

Cashflow Stage 1 Private Financing
(cont'd)

		years			
6	7	8	9	10	TOTAL
900	600	450	350	209	7,109
8,500	8,750	9,000	9,250	9,500	
7,650,000	5,250,000	4,050,000	3,237,500	1,985,500	66,135,500
535,000	367,500	283,500	225.625	138,985	4,629,485
7,114,500	4,882,500	3,766,500	3,010,875	1,846,515	61,506,015
2,250,000	-0-	-0-	-0-	-0-	15,154,000
1,500,000	40,000	25,000	25,000	25,000	1,395,000
1,500,000	100,000	75,000	50,000	25,000	1,150,000
55,000	44,000	36,000	30,000	27,000	691,000
1,500,000	100,000	75,000	75,000	50,000	1,200,000
1,000,000	75,000	50,000	50,000	30,000	930,000
50,000	40,000	30,000	20,000	10,000	390,000
75,000	75,000	75,000	75,000	75,000	750,000
2,980,000	474,000	366,000	325,000	24,200	21,660,000
4,134,500	4,408,500	3,400,500	2,685,875	1,604,515	39,846,015
2,520,000	1,680,000	620,000			13,500,000
242,600	176,400	31,000			5,478,000
2,762,600	1,856,400	651,000			18,978,000
1,371,900	2,552,100	2,749,500	2,685,875	1,604,515	20,868,015
					126,260
					20,741,755

Figure 59

Present Value Analysis

Stage 1, Stage 2, and Stages 1 & 2 Combined

STAGE 1

Year	Free & Clear	x	19% P.V. Factor	=	P.V.	Net Cash After Financing	x	30% P.V. Factor	=	P.V.
1	$6,416,000		0.91670		$5,881,500	$5,066,000		0.87706		$ 4,443,200
2	(2,875,000)		0.77033		(2,215,100)	(5,066,000)		0.67466		(3,417,800)
3	9,301,200		0.64734		6,021,100	4,718,490		0.51897		2,448,800
4	5,477,000		0.54398		2,979,400	2,433,000		0.39921		971,300
5	5,293,400		0.45713		2,419,800	2,607,400		0.30708		800,400
6	4,134,500		0.38414		1,588,200	1,317,900		0.23622		324,100
7	4,408,500		0.32281		1,423,100	2,552,100		0.18171		463,700
8	3,400,500		0.27127		922,500	2,749,500		0.13977		384,300
9	2,685,900		0.22796		612,300	2,685,900		0.10752		288,800
10	1,604,500		0.19156		307,400	1,604,500		0.08271		132,700
11										
12										
13										
14										
15										
16										
17										
18										
19										
20										
	Total Present Value				19,940,200	Total Present Value				6,839,500
	Purchase Price				20,000,000	Equity				6,500,000

STAGE 2

Free & Clear	x	10% P.V. Factor	=	P.V.	Net Cash After Financing	x	10% P.V. Factor	=	P.V.
$ -0-				$	$ -0-				$
-0-					-0-				
-0-					-0-				
-0-					-0-				
4,420,900		0.65123		2,879,000	1,114,900		0.60051		669,500
5,276,000		0.59202		3,123,500	2,028,800		0.53617		1,087,800
3,986,000		0.53820		2,145,300	788,800		0.47872		377,600
6,625,400		0.48928		3,241,700	2,053,200		0.42743		877,600
6,953,000		0.44480		3,092,700	2,580,800		0.38163		984,900
7,185,800		0.40436		2,905,700	3,013,600		0.34074		1,026,900
7,385,000		0.36760		2,714,700	3,412,800		0.30424		1,038,300
7,495,000		0.33418		2,504,700	3,722,800		0.27164		1,011,300
7,495,000		0.30380		2,277,000	3,827,800		0.24254		928,400
7,495,000		0.27618		2,070,000	4,037,800		0.21655		874,400
7,495,000		0.25108		1,881,800	4,247,800		0.19335		821,300
7,495,000		0.22825		1,710,700	4,457,800		0.17263		769,600
7,495,000		0.20750		1,552,000	4,667,800		0.15414		719,500
7,495,000		0.18864		1,413,800	4,877,800		0.13762		671,300
7,495,000		0.17149		1,285,300	5,087,800		0.12288		625,200
7,495,000		0.15590		1,168,500	5,372,000		0.10971		589,400
Total Present Value				35,969,000					13,073,000
Construction Cost				36,678,400*	Total Present Value Equity				12,499,100*

STAGES 1 & 2 COMBINED

Year	Stage 1 Free & Clear	Stage 2 Free & Clear	Total Free & Clear	12% P.V. Factor	Project Present Value	Stage 1 Net Cash After Financing	Stage 2 Net Cash After Financing	Total Net Cash After Financing	16% P.V. Factor	Project Present Value
1	6,416,000	-0-	6,416,000	0.94491	6,062,600	5,066,000	-0-	5,066,000	0.92848	4,703,700
2	(2,875,000)	-0-	(2,875,000)	0.84367	(2,425,600)	(5,066,000)	-0-	(5,066,000)	0.80041	(4,054,900)
3	9,301,200	-0-	9,301,200	0.75328	7,006,400	4,718,490	-0-	4,718,490	0.69001	3,255,800
4	5,477,000	-0-	5,477,000	0.67257	3,683,700	2,433,000	-0-	2,433,000	0.59484	1,447,200
5	5,293,400	4,420,900	9,714,300	0.60051	5,833,500	2,607,400	1,114,900	3,722,300	0.51279	1,908,800
6	4,134,500	5,276,000	9,410,500	0.53617	5,045,600	1,317,900	2,208,800	3,346,700	0.44206	1,479,400
7	4,408,500	3,986,000	8,394,500	0.47872	4,018,600	2,552,100	788,800	3,340,900	0.38109	1,273,200
8	3,400,500	6,625,400	10,025,900	0.42743	4,285,400	2,749,500	2,053,200	4,802,700	0.32852	1,577,800
9	2,685,900	6,953,000	9,638,900	0.38163	3,678,500	2,685,900	2,580,800	5,266,700	0.28321	1,491,600
10	1,604,500	7,185,800	8,790,300	0.34074	2,995,200	1,604,500	3,013,600	4,618,100	0.24415	1,127,500
11		7,385,000	7,385,000	0.30424	2,246,800		3,412,800	3,412,800	0.21047	718,300
12		7,495,000	7,495,000	0.27164	2,035,900		3,722,800	3,722,800	0.18144	675,500
13		7,495,000	7,495,000	0.24254	1,817,800		3,827,800	3,827,800	0.15641	598,700
14		7,495,000	7,495,000	0.21655	1,623,000		4,037,800	4,037,800	0.13484	544,500
15		7,495,000	7,495,000	0.19335	1,449,100		4,247,800	4,247,800	0.11624	493,800
16		7,495,000	7,495,000	0.17263	1,293,900		4,457,800	4,457,800	0.10021	446,700
17		7,495,000	7,495,000	0.15414	1,155,200		4,667,800	4,667,800	0.08639	403,200
18		7,495,000	7,495,000	0.13762	1,031,500		4,877,800	4,877,800	0.07447	363,300
19		7,495,000	7,495,000	0.12288	921,000		5,087,800	5,087,800	0.06420	326,600
20		7,495,000	7,495,000	0.10971	822,300		5,372,000	5,372,000	0.05534	297,300
		Total Present Value			19,078,000			Total Present Value		54,580,400
		Equity			18,999,100*			Land Purchase & Construction Costs		56,678,500

*Stage 2 Construction Cost and Equity are Present Valued to year 1 @7%

Varying the absorption rate to account for less rapid land sales is one way to test the sensitivity of the projected rate of return. By lowering the projected land sales to a maximum annual sale of 650 acres and extending the sales period to 12 years, the rate of return on equity lowers to 21 percent and a deficit of $250,800 occurs in year six. Varying land sales such that 1,120 acres remained unsold after year 10, the rate of return on equity would be 10 percent with a net cash deficit of $1,777,300 in year 11.

Stage II

Cash Flow. The cash flow analysis for private financing of Stage II, construction of the major utility services, is based on assumptions similar to those in Stage I, with the following exceptions:

1. Marketing efforts are assumed not to be required and are not included.
2. Management costs accrue after the completion of construction.
3. Operation and maintenance costs include an allowance for replacement of capital equipment.
4. Growth in water and wastewater treatment requirements is a function of acreage sold. Water demand is calculated on a percentage of the initial demand with the assumption that the initial industries (petrochemical and refinery) have higher requirements than secondary industries. Future water demand is assumed to be .0025 MGD/acre. Additional cooling water requirements are not estimated. The projected water use over the life of the project increases from an initial 20.3 MGD to 34.4 MGD and is constant after year 10.
5. The project cost is $41,370,000.
6. Financing would be $28,221,900 at 10 percent interest.
7. Construction of Stage II begins in the third year of Stage I.

The projected cash flows for Stage II on a 20 year project life are shown in Figure 60. The primary development expenses of this Stage occur in the third and fourth years of the project. Facility expansion expenses occur in year seven.

Revenues from sales begin with completion of the construction in the fifth year of the project. Service rates were assumed to be a combined total of $1.15/M gallons of treated water and wastewater.

Return on Investment. The present value of return on Stage II investment (see Figure 59) was calculated by the same procedure used for Stage I. While investment begins in year three of the project, present values of the returns and investment costs were calculated back to project year one. The present value of investment costs was taken at seven percent, to represent an opportunity interest rate at which money, borrowed in year one, could be invested for a short-term return. This procedure was used to bring all costs and returns to a common time-base.

Pricing was based on 50 cents per thousand gallons of treated water, and 65 cents per thousand gallons of wastewater treatment. With the simplifying assumption that the amounts of treated water and wastewater are equal, the combined cost is $1.15 per thousand gallons.

Based on the assumption discussed above, the before-tax rate of return on the free-and-clear was found to be just under 10 percent. For equity, the rate of return was found to be just over 10 percent.

Discussion. The rate of return before taxes on Stage II is low for the private investor. The after tax return would be significant for this phase, however, because of depreciation on the facilities.

Figure 60

Cashflow Stage 2 - Private Financing

Financing Assumptions:

Construction Cost	$41,370,000	Mortgage	$28,221,900
Interest During Construction	1,351,900	Interest Rate	10%
Project Capital Cost	42,721,900	Equity	$14,500,000

	years								
	1	2	3	4	5	6	7	8	9
Sales, MGD					20.3	24.2	28.1	30.4	31.9
Revenue @1.15/M					8,520,900	10,158,000	11,795,000	12,760,400	13,390,000
Construction Expenditures			12,850,000	23,600,000					
Expenses:									
Expansion							2,000,000		
Engineering			1,029,000	1,891,000	40,000	50,000	160,000	65,000	70,000
Contingency			705,000	1,295,000	25,000	30,000	75,000	40,000	45,000
O&M					3,835,000	4,572,000	5,309,000	5,743,000	6,026,000
Management					200,000	230,000	265,000	287,000	301,000
Total Expenses			1,734,000	3,186,000	4,100,000	4,882,000	7,809,000	6,135,000	6,437,000
Project Construction Cost			14,584,000	26,786,000					
Interest During Construction			4,200	1,347,700					
Capital Cost			14,588,200	28,133,700					
Net Cash Free & Clear					4,420,900	5,275,000	3,986,000	6,625,400	6,953,000
Financing									
Interest Payment			-0-	-0-	2,806,000	2,747,200	2,697,200	2,572,200	2,372,200
Principal Payment			-0-	-0-	500,000	500,000	500,000	2,000,000	2,000,000
Loan Balance			88,200	28,221,900	27,721,900	27,221,900	26,721,900	24,721,900	22,721,900
Net Cash After Financing					1,114,900	2,028,800	788,800	2,053,200	2,580,800

Figure 60

Cashflow Stage 2 - Private Financing

(cont'd)

years

10	11	12	13	14	15	16	17	18	19	20
33.0	33.9	34.4	34.4	34.4	34.4	34.4	34.4	34.4	34.4	34.4
12,851,800	14,229,000	14,439,000	14,439,000	14,439,000	14,439,000	14,439,000	14,439,000	14,439,000	14,439,000	14,439,000
75,000	75,000	75,000	75,000	75,000	75,000	75,000	75,000	75,000	75,000	75,000
45,000	45,000	45,000	45,000	45,000	45,000	45,000	45,000	45,000	45,000	45,000
6,234,000	6,404,000	6,499,000	6,499,000	6,499,000	6,499,000	6,499,000	6,499,000	6,499,000	6,499,000	6,499,000
312,000	320,000	325,000	325,000	325,000	325,000	325,000	325,000	325,000	325,000	325,000
6,666,000	6,844,000	6,944,000	6,944,000	6,944,000	6,944,000	6,944,000	6,944,000	6,944,000	6,944,000	6,944,000
7,185,800	7,385,000	7,495,000	7,495,000	7,495,000	7,495,000	7,495,000	7,495,000	7,495,000	7,495,000	7,495,000
2,172,200	1,972,200	1,772,200	1,567,200	1,357,200	1,147,200	937,200	727,200	517,200	307,200	101,100
2,000,000	2,000,000	2,000,000	2,100,000	2,100,000	2,100,000	2,100,000	2,100,000	2,100,000	2,100,000	2,021,900
20,721,900	18,721,900	16,721,900	14,621,900	12,521,900	10,421,900	8,321,900	6,221,900	4,121,900	2,021,900	-0-
3,013,600	3,412,800	3,722,800	3,827,800	4,037,800	4,247,800	4,457,800	4,667,800	4,877,800	5,087,800	5,372,000

Combined Stage I and II. The previous analyses have shown that Stage I would provide a reasonable rate of return for the private investor. Stage II provides a much lower rate of return and would be a risky venture. The marketability of the project, however, would be improved if the developer can offer a tenant full utility services. Therefore, a rate of return for a combined private investment in Stages I and II is also shown in Figure 59. Stage II construction costs are present valued to year one at seven percent.

As would be expected, the rate of return is lower for both the free and clear basis and on equity with Stage II included in the project. The free and clear rate of return on the $56,678,400 land purchase and construction costs is 12 percent before taxes. The rate of return on the $18,999,100 equity is 16 percent before taxes. Assuming that a reasonable rate of return should approach 20 percent before taxes, private financing of Stage II would still be considered a risky investment.

Public Financing

Projected cash flows for a publicly financed project are shown in Figures 61 and 62. This analysis is based on 100 percent financing of the land purchase with an additional 15 percent reserve. It is assumed that financing would be provided by general obligation bonds or revenue bonds with a six percent interest rate. A 10-year amortization schedule is provided for Stage I and a 15-year schedule for Stage II. To simplify calculations, a level annual principal and interest payment is assumed. Other assumptions follow the private financing cash flow analysis.

Stage I Cash Flow. The annual level principal and interest payments for Stage I would be $3,125,000 to amortize a $23,000,000 loan in 10 years. The $3,000,000 reserve is drawn down to $533,500 to meet a deficit in year two. At the same land prices as those of the privately financed project, proceeds are such that the reserve is restored in year three and a surplus over reserve of $3,276,250 accrues. The surplus accumulates to $8,753,455 at the end of the amortization period.

If the channel excavation costs were assumed by the Corps of Engineers, Stage I development costs would be reduced by $5.6 million or 40 percent. This would result in concomitant surplus of revenue to a public financier.

Stage II Cash Flow. Stage II construction costs and expenses for public financing would be the same as for private financing. The cash flow, however, is analyzed for two separate price schedules. For the first case, revenues are based on $1.05/M gallons. Financing includes $41,370,000 construction costs and a 15 percent reserve of $6,205,000 for a total bond indebtedness of $47,575,500. Amortization at 6 percent over 15 years requires an annual level principal and interest payment of $4,900,000. Revenues at the case 1 price schedule create a surplus in excess of reserves starting in project year 13. Deficits draw the reserve down to a minimum of $422,300 in the seventh project year. Total accumulated surplus over reserve at the end of the amortization period is $8,769,100.

Cash flow was also calculated for a price schedule of $1.00/M gallons to determine the effect on required financing. At this rate, a reserve of 20 percent of the construction costs would be requires for a total bonded indebtedness of $49,644,000. Amortization at 6 percent over 15 years requires a level annual principal and interest payment of $5,111,500. Deficits in the first four years of the payout period reduce the reserve to a minimum of $381,000 in project year eight. At the end of the amortization period, the reserve balance is $5,165,000. This is $3,109,000 less than the original reserve.

Discussion. The cash flow analysis for a publicly financed project indicates that Stage I can be financed with a 15 percent reserve to cover deficits in year two and general contingencies. Revenues provide a surplus over reserve at the end of the amortization period. This surplus indicates that a publicly financed project could offer land at lower prices than the private development, thereby providing an incentive for industry to locate at the site. As an alternative interpretation, the

Figure 61

Cashflow Stage 1 Public Financing

Given Data:		Financing Assumptions:	
Gross Acres	10,000	Bonded Indebtedness	$23,000,000
Net Salable Acres	7,109	Reserve	$ 3,000,000
Purchase Price	$20,000,000	Interest rate	6%
Market Projections	100% sold	Payout	10 years @ $3,125,000/year

Year	1	2	3	4	5	6	7	8	9	10	Total
Marketing:											
Acres Sold	1,500	700	850	800	750	900	600	450	350	209	7,109
Price Per Acre	8,000	12,500	12,500	8,000	8,250	8,500	8,750	9,000	9,250	9,500	
Gross Revenue	12,000,000	8,750,000	10,625,000	6,400,000	6,187,500	7,650,000	5,250,000	4,050,000	3,237,500	1,985,500	66,135,500
Less Sales Expense @ 7%	840,000	612,500	743,750	448,000	433,125	535,000	367,500	283,500	226,625	138,985	4,629,485
Net Proceeds:	11,160,000	8,137,500	9,881,250	5,952,000	5,754,375	7,114,500	4,882,500	3,766,500	3,010,815	1,846,515	61,506,015
Expenses:											
Land Development	3,281,000	9,623,000	-0-	-0-	-0-	2,250,000	-0-	-0-	-0-	-0-	15,154,000
Engineering	550,000	490,000	40,000	25,000	25,000	1,500,000	40,000	25,000	25,000	25,000	1,395,000
Contingency	250,000	250,000	100,000	75,000	75,000	1,500,000	100,000	75,000	50,000	25,000	1,150,000
Direct Overhead	200,000	200,000	150,000	100,000	100,000	1,500,000	100,000	75,000	75,000	50,000	1,200,000
Promotion & Signs	200,000	200,000	75,000	75,000	75,000	1,000,000	75,000	50,000	50,000	30,000	930,000
Other	60,000	60,000	40,000	40,000	40,000	50,000	40,000	30,000	20,000	10,000	390,000
Management Fees	75,000	75,000	75,000	75,000	75,000	75,000	75,000	75,000	75,000	75,000	750,000
Total Expenses	4,616,000	10,898,000	480,000	390,000	390,000	2,925,000	430,000	330,000	295,000	215,000	
Available to Debt Service	6,544,000	(2,760,500)	9,401,250	5,562,000	5,364,375	4,189,500	4,452,500	3,436,500	2,715,875	1,631,515	
Payments (Principal & Interest)	3,125,000	3,125,000	3,125,000	3,125,000	3,125,000	3,125,000	3,125,000	3,125,000	3,125,000	3,125,000	
Reserve Balance	3,000,000	533,500	3,000,000	3,000,000	3,000,000	3,000,000	3,000,000	3,000,000	3,000,000	3,000,000	
Surplus over Reserve	3,419,000	-0-	3,276,250	5,713,250	7,952,625	9,017,125	10,344,625	10,656,125	10,246,940	8,753,455	

Figure 62

Cashflow Stage 2 Public Financing

Financing Assumptions:

	Case 1	Case 2
Bonded Indebtedness	$47,575,500	$49,644,000
Reserve	6,205,500 (15%)	8,274,000 (20%)
Interest rate	6%	
Payout 15 years	4,900,000/yr.	5,111,500/yr.

years

Year	1	2	3	4	5	6	7	8
Sales, MGD					20.3	24.2	28.1	30.1
Case 2 Revenue @ 40¢/M water treatment					7,409,500	8,833,000	10,256,500	11,096,000
60¢/M waste water								
Case 1 Revenue @ 40¢ + 65¢					7,779,975	9,274,650	10,769,325	11,650,800
Construction Expenditures			12,850,000	23,500,000				
Expenses:								
Expansion							2,000,000	
Engineering			1,029,000	1,391,000	40,000	50,000	160,000	65,000
Contingency			705,000	1,295,000	25,000	30,000	75,000	40,000
O&M					3,835,000	4,572,000	5,309,000	5,743,000
Management					200,000	230,000	265,000	287,000
Total Expenses			1,734,000	3,186,000	4,100,000	4,882,000	7,809,000	6,135,000
Project Construction Cost			14,584,000	26,786,000				
Financing:								
Interest During Construction			437,500	1,678,690				
Capital cost			15,021,500	28,464,600				
Total capital cost (yr. 3 & 4 construction & interest)				43,486,100				
Case 1 Available to Debt Service					3,679,975	4,392,650	2,960,325	5,515,800
Payments					4,900,000	4,900,000	4,900,000	4,900,000
Deficit					(1,220,000)	(507,400)	(1,939,700)	
Reserve				4,089,400	2,869,400	2,362,000	422,300	1,038,100
Surplus over reserve								
Case 2 Available to Debt Service					3,309,500	3,951,000	2,447,500	4,961,000
Payments					5,111,500	5,111,500	5,111,500	5,111,500
Deficit					(1,802,000)	(1,160,500)	(2,664,000)	(150,500)
Reserve				6,158,000	4,356,000	3,195,500	531,500	381,000

Figure 62

Cashflow Stage 2 Public Financing
(cont'd)

years

9	10	11	12	13	14	15	16	17	18	19
31.9	33.0	33.9	34.4	34.4	34.4	34.4	34.4	34.4	34.4	34.4
11,643,500	12,045,000	12,373,500	12,556,000	12,556,000	12,556,000	12,556,000	12,556,000	12,556,000	12,556,000	12,556,000
12,225,675	12,647,250	12,992,175	13,183,800	13,183,800	13,183,800	13,183,800	13,183,800	13,183,800	13,183,800	13,183,800
70,000	75,000	75,000	75,000	75,000	75,000	75,000	75,000	75,000	75,000	75,000
40,000	45,000	45,000	45,000	45,000	45,000	45,000	45,000	45,000	45,000	45,000
6,026,000	6,234,000	6,404,000	6,499,000	6,499,000	6,499,000	6,499,000	6,499,000	6,499,000	6,499,000	6,499,000
301,000	312,000	320,000	325,000	325,000	325,000	325,000	325,000	325,000	325,000	325,000
6,437,000	6,666,000	6,844,000	6,944,000	6,944,000	6,944,000	6,944,000	6,944,000	6,944,000	6,944,000	6,944,000
5,788,675	5,981,250	6,148,175	6,239,800	6,239,800	6,239,800	6,239,800	6,239,800	6,239,800	6,239,800	6,239,800
4,900,000	4,900,000	4,900,000	4,900,000	4,900,000	4,900,000	4,900,000	4,900,000	4,900,000	4,900,000	4,900,000
1,926,800	3,008,000	4,256,200	5,596,000	6,205,500	6,205,500	6,205,500	6,205,500	6,205,500	6,205,500	6,205,500
				730,300	2,070,100	3,409,900	4,749,700	6,089,500	7,429,300	8,769,100
5,206,500	5,379,000	5,529,500	5,612,000	5,612,000	5,612,000	5,612,000	5,612,000	5,612,000	5,612,000	5,612,000
5,111,500	5,111,500	5,111,500	5,111,500	5,111,500	5,111,500	5,111,500	5,111,500	5,111,500	5,111,500	5,111,500
476,000	743,500	1,161,500	1,662,000	2,162,500	2,663,000	3,163,500	3,664,000	4,164,500	4,665,000	5,165,000

surplus could be applied to financing additional pollution control facilities, or for assisting local political subdivisions in mitigating social and economic impacts of the project.

If the Corps funded the channel excavation, Stage I development costs would be decreased by approximately 40 percent. The feasibility of this alternative, however, would depend upon the extent to which a project schedule could allow for a minimum of 10 years in authorization and funding.

The cash flow for public financing of Stage II indicates that services could be provided at a 13 percent reduction in price at the case 2 ($1.00/M gallons) rate if financing includes a 20 percent reserve. A price of $1.05/M gallons would be an 8.7 percent reduction over private rates, and require a 15 percent reserve in financing.

Summary

At a price per acre comparable to the existing full service industrial land market, Stage I of the project (land purchase, canal construction, and site preparation) could be profitable private investment. A private investment of both Stage I and the utility services construction in Stage II would be a marginal investment if competitive rates are charged. Public financing of Stage II by a Utility District or Navigation District would be feasible at slightly lower rates. Because Stage I feasibility is contingent upon the services provided in Stage II, public financing of the utilities appears to be warranted.

Stage I of the project could be publicly financed by an entity such as a Navigation District. The cash flow analysis indicates that revenues from land sales would provide a surplus which could be applied to other navigation improvements or mitigation of the project impacts, or could be reflected in lower land prices as an incentive for industry to locate at the site. Development of the project by a navigation district would be advantageous primarily in terms of the flexibility of financing alternatives and the ability to exercise power of eminent domain. A potential disadvantage of public financing is that tax revenues generated by the development would be reduced until tracts are purchased or leased by industry.

As a final alternative, funding of the canal construction could be provided by the Corps of Engineers, reducing Stage I development costs by approximately 40 percent. However, the feasibility of this alternative is limited by the uncertainty of authorization and funding. Estimates provided by the Galveston District, U.S. Corps of Engineers indicate that a project of this magnitude would require at least 10 to 11 years in preconstruction studies, authorization, planning, and design (U.S. Army Corps of Engineers, 1977). Authorization for Corps funding would also be contingent upon sponsorship by a port authority, navigation district, or other public entity.

Economic Feasibility Analysis References

Carestio, R. M. 1971. "Land Absorption in Industrial Parks." *Industrial Development and Manufacturers Record.* January, pp. 18-21.

Lochmoeller, D. C. et al. 1975. *Industrial Development Handbook.* Washington, D. C.: The Urban Land Institute.

Thorne, O. J. 1971. "Industrial Park Cash Flow Analysis." *Industrial Development and Manufacturers Record.* March/April.

U.S. Army Corps of Engineers, Galveston District. 1977. Personal Communication.

The environmental impact analysis is presented in two parts: impacts of inland canal construction and industrial site preparation, and impacts of industrial site development and operation. Each part includes an economic, environmental, and social and infrastructural assessment.

The major impacts of inland canal construction and industrial site preparation include: (1) a short-term fiscal deficit of as much as $72,808 in the local governments of Brazoria County; (2) various environmental effects such as upland habitat loss and habitat isolation, modification of upland sheetflow runoff to point source flow, modification of the flow rate and volume of Redfish Bayou in its upper reach, and potential salt-water intrusion into the water table adjacent to the canal; and (3) various social and infrastructural effects such as possible relative decline in levels of public service, stress on existing transportation systems, and possible home relocations in Jones Creek north of Highway 36.

The major impact issues of industrial site development and operation include (1) short-term governmental fiscal deficits and decline in infrastructural ability to efficiently provide expanded public services; (2) stress on existing transportation and water supply systems; (3) various environmental impact issues such as exacerbated subsidence problems with groundwater impact issues such as exacerbated subsidence problems with groundwater withdrawal, concentrated and increased air emissions loadings from aggregated industries, and the possibility of hazardous spills in the inland canal harbor and channel escaping into nearby wetlands; and (4) social responses to environmental impacts such as increased industrial activity and air pollution.

IMPACTS OF INLAND CANAL CONSTRUCTION AND INDUSTRIAL SITE PREPARATION

The construction of the canal and preparation of the industrial site involves a number of activities including dredging, earthwork, and construction of a railroad spur, and construction of water and waste treatment plants. It is a major project which will take several years to complete and which, because of its scope, will affect the economic, environmental and social systems of Brazoria County as a whole and of the Brazosport area in particular. The major components of this project and its impacts are discussed in this chapter.

Economic Impact Analysis*

Construction Activities

The construction activities can be grouped into distinct phases. Phase 1 consists of those activities which must be undertaken before refinery and petrochemical complex construction may begin. Phase 2 involves those activities which must be completed by the time the locating plants become operational.

Activities within each phase are clustered by major contract; these are presented with their estimated cost and job time in Figure 63. Each phase is expected to take approximately two years. Because it takes about two and a half to three years to build a refinery (New England River Basins Commission, 1976) and because the second phase would normally be scheduled for completion upon commencement of the actual operation of the plants, it is assumed that the two phases do not overlap.

*The economic impact methodology was first developed as part of the study *Offshore Oil: Its Impact on Texas Communities*, prepared for the General Land Office of Texas by RPC, Inc., June, 1977. As a result, certain portions of this section borrow heavily from that study.

Figure 63

Major Activities
Canal Construction and Industrial Site Preparation

Activities	Job Time (Weeks)	Size of Contract ($ Millions)	Location of Contractor[1]
Phase 1:	113	13.93	
Disposal Levee	6	0.27	Local
Land-Based Earthwork	88	5.74	Non-local
Dredging	52	4.90	Non-local
Redfish Bayou Diversion	9	0.23	Non-local
Railroad Spur	10	1.51	Non-local
Pipeline Relocation	12	0.25	Local
Engineering and Supervision	113	1.03	Non-local
Phase 2:	104	39.37	
Raw Water Supply	13	3.78	
Pump Station	6	0.18	Non-local
Raw Water Main	5	1.35	Local
Well Field	12	1.20	Local
Well Field Main	7	1.05	Local
Water Treatment Plant	52	5.83	Non-local
Waste Treatment Plant	104	25.70	Non-local
Cooling Water Discharge	8	1.14	Local
Engineering and Supervision	104	2.92	Non-local

[1]"Local" means that the firm is from Brazoria County. "Non-local" means that the firm is from elsewhere in the state. It is expected that most of the "non-local" firms will be from the Houston area.

Not all of the activities will occur simultaneously or for the same length of time. And, in some cases, completion of one activity is necessary before another can begin. Consequently, the activities of Phases 1 and 2 must be distributed over time; this is done in Figures 64 and 65 respectively.

The economic impacts of the construction activities on the study area will vary according to the location of the contracting firm. For a given project in Brazoria County, a firm located in the County (a "local" firm) can be expected to spend a greater percentage of its expenditures within the county than would a firm from Houston for example. And, while the local firm's labor force would be drawn almost entirely from the local labor pool, the nonlocal firm would tend to bring into the county its regular skilled operators while hiring unskilled workers locally.

Judgments concerning the probable location of the contractor for each activity were based upon a consideration of the types of construction firms currently located in Brazoria and Harris Counties and elsewhere in the state and upon discussions with industry sources. Figure 63 shows the postulations made concerning the location of each contractor. Due in part to the proximity of many large construction firms in the Houston/Galveston area, most of the activities are seen as likely to be performed by Texas firms from outside of Brazoria County.

Economic Impact Analysis Procedure

Among the impacts on the Brazoria County economy expected as a result of the construction project would be increases in employment, personal income, and tax revenue. In addition, an anticipated influx of construction workers from outside the county would result in a temporary rise in total population accompanied by a higher level of demand for public goods and services. Within the county, the Brazosport area surrounds the canal site and thus seems likely to experience most of the identified impacts. (Brazosport is a name given to these closely associated municipalities: Jones Creek, Lake Jackson, Clute, Freeport, Richwood, Brazoria, Quintana, Surfside, and Oyster Creek.)

Figure 64
Distribution of Activities Over Time

Phase 1

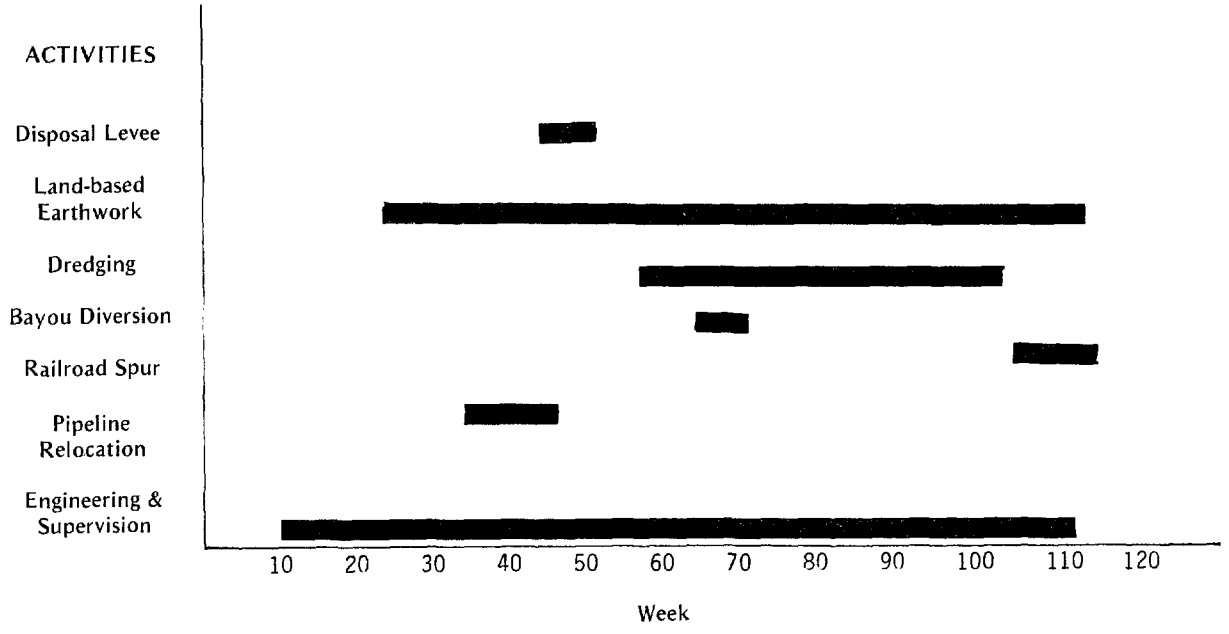

Figure 65
Distribution of Activities Over Time

Phase 2*

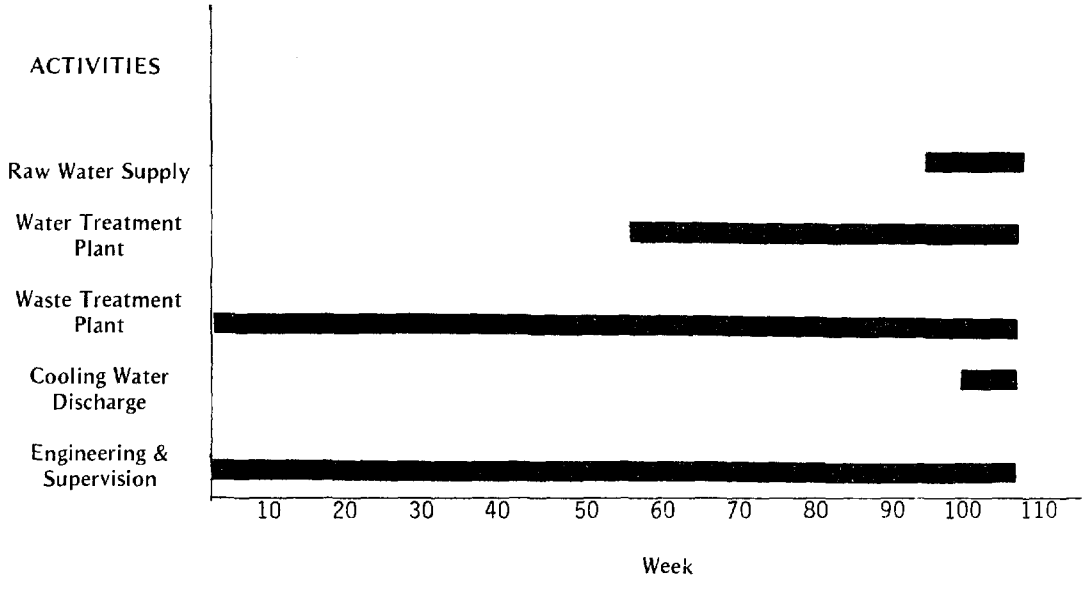

*There is assumed to be no overlap between Phases 1 and 2

An input/output (I/O) model of Brazoria County was used to estimate many of the economic impacts on the county. In its essence, an input/output model is an accounting system which traces the flow of goods and services throughout a regional economy. Such a model is especially suited for the calculation of indirect and induced effects (referred to throughout this study simply as indirect effects) of any change in the level of sales, purchases, production, or employment in any one of a region's economic sectors. In very basic terms, if sector A reduces or increases expenditures, for example, those changes can be termed primary effects. The changes in sectors B through Z, which are brought by the primary effects, can be called indirect effects.

A Texas I/O model was developed in 1973 and has since been updated to incorporate 1972 Department of Commerce data. The state model served as the basis for the Brazoria County (BC) I/O model used in this study. A detailed description of this regional model is presented in Appendix D.

Primary Expenditures

Total expenditures and expenditures made in Brazoria County for each activity over time are presented in Figure 66. These estimates were derived in the following manner:

1. The total expenditure for each activity was assumed to be equal to its estimated cost, as shown in Figure 63.

2. Expenditures made locally, that is, in Brazoria County, by local firms were calculated by using the BC I/O model. According to the model, 39.8 percent of all purchases by Brazoria County construction firms are made locally. This ratio was then applied to the total expenditures of the firms to give estimated expenditures by local firms within the county.

3. Estimates of local expenditures by construction firms located outside of Brazoria County were based on conversations with individuals from the construction industry, from the Texas Industrial Commission, and from the U.S. Army Corps of Engineers. Payments assumed to be made locally include the following: wages paid to new and existing residents, subsistence items (for example, food) by the dredging firm, ready-mix, and diesel fuel and lubricating oil for all activities except dredging.

Of expenditures totalling $54 million, $6.6 million, or about 12 percent, are estimated to be made within Brazoria County.

Employment

The project will require workers in Brazoria County, both in the construction sector and in other sectors which supply the construction sector. Of the construction jobs, some will be filled by current residents of the county, some by people who will move into the area for the duration of the job, thereby temporarily increasing the area's population, and some by people who will continue to live outside the county while commuting each day to the construction site.

The new population associated with the construction project, then, is primarily a function of the new employment; the same can be said of the number of new housing units and of the number of new students. Thus, the first step in calculating new population, housing units, and students, is to calculate new employment, and the first step in that process is the determination of total manpower requirements over time. This process can be seen graphically as follows:

Total Employment. Total employment in Brazoria County required by both phases of the project consists of those hired to work directly on the project and those hired in other sectors of the economy as a result of the project. The former, or direct employment, is calculated by determining the project's total manpower requirements over time. The latter, or indirect employment, was estimated by using the indirect employment coefficient from the BC I/O model.

Figure 66

Primary Expenditures[1]
($ Thousands)

Time Period (Weeks)	Expenditures in Brazoria County By Local Firms[2]	By Non-local Firms[3]	Total	Total Expenditures By Local Firms[2]	By Non-local Firms[3]	Total
Phase 1:						
1-25	-	55.1	55.1	-	227.9	227.9
26-31	-	51.8	51.8	-	446.1	446.1
32-35	-	41.9	41.9	-	297.4	297.4
36-44	74.6	94.3	168.9	187.5	669.1	856.6
45-46	52.4	21.4	73.8	131.7	148.7	280.4
47	26.2	11.9	38.1	65.8	74.3	140.1
48-50	53.7	35.8	89.5	135.0	223.0	358.0
51-54	-	63.1	63.1	-	674.3	674.3
55-61	-	103.6	103.6	-	1,180.0	1,180.0
62-63	-	32.4	32.4	-	388.3	388.3
64-70	-	101.9	101.9	-	1,358.9	1,358.9
71-76	-	130.7	130.7	-	1,011.4	1,011.4
77-79	-	63.9	63.9	-	505.7	505.7
80-98	-	334.6	334.6	-	3,202.9	3,202.9
99-102	-	62.6	62.6	-	674.3	674.3
103	-	11.8	11.8	-	74.3	74.3
104-113	-	153.5	153.5	-	2,253.4	2,253.4
Total	$ 206.9	$1,370.4	$1,577.2	$ 520.0	$13,410.0	$13,930.0
Phase 2:						
1-6	-	66.9	66.9	-	1,651.2	1,651.2
7-52	-	800.7	800.7	-	12,658.9	12,658.9
53-60	-	238.6	238.6	-	3,098.5	3,098.5
61-91	-	1,426.3	1,426.3	-	12,006.5	12,006.5
92-96	736.3	257.2	993.5	1,850.0	2,086.5	3,936.5
97	96.5	51.4	147.9	242.5	417.3	659.8
98-103	937.3	276.1	1,213.4	2,355.0	2,323.8	4,678.8
104	116.4	46.0	162.4	292.5	387.3	679.8
Total	$1,886.5	$3,163.2	$5,049.7	$4,740.0	$34,630.0	$39,370.0

1. Totals may not add due to rounding.
2. Local firms are those firms located in Brazoria County.
3. Non-local firms are those firms not located in Brazoria County. It is expected that most will come from the Houston area.

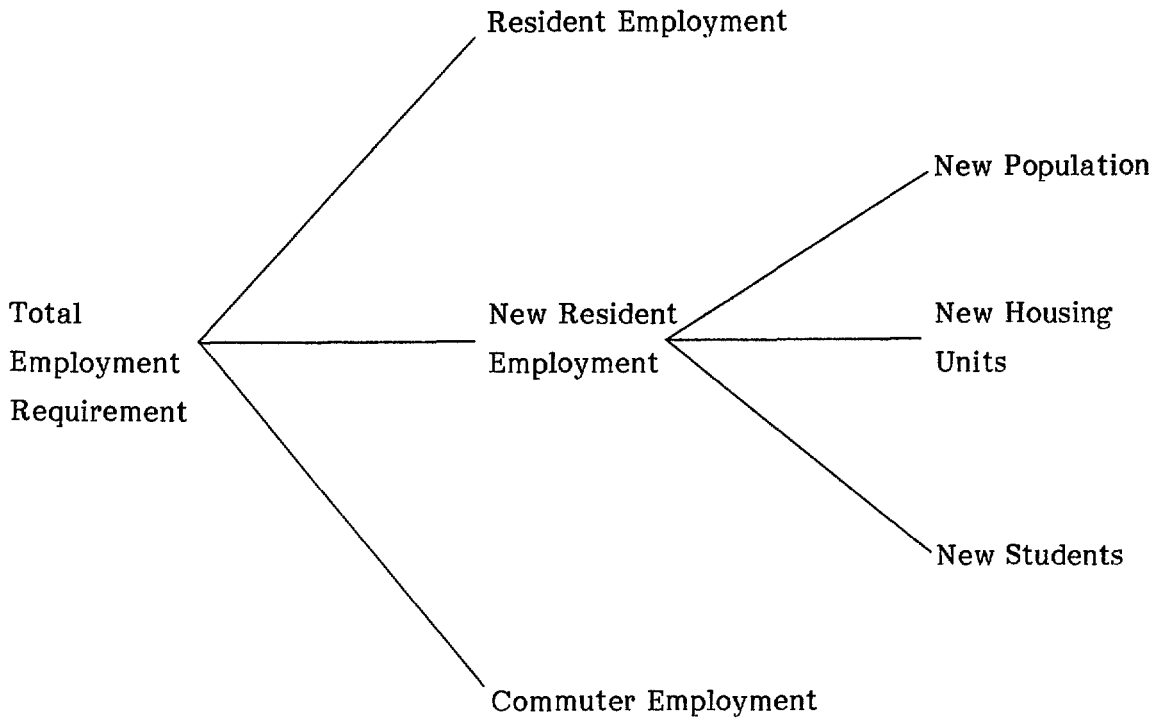

This coefficient is equal to 19.847 employees per million dollars of primary expenditures in the county per year. That is, almost 20 indirect jobs will be required in the county each year for each million dollars of direct expenditures spent by the construction sector in Brazoria County. The product of the coefficient and direct expenditures in Brazoria County, adjusted for time, is equal to the indirect employment required by the project.

Direct and indirect employment requirements are displayed in Figure 67. Total employment for any time period is simply the sum of the direct and indirect employment; this also is displayed in Figure 67. No aggregate employment is calculated because the employment figures cannot be cumulated from one time period to the next. Each of the construction activities has an employment requirement. Since the activities occur at different times, the total employment varies between time periods, as the employment associated with one activity ends and another begins. Thus, the employment figure for any time period must *not* be seen as an addition to the previous, corresponding figure. Rather, it should be considered as the total employment requirement in that time period in Brazoria County.

Origin of Employment. Having calculated total employment requirements, it remains to be determined what percentage of those requirements will be resident employment, what percentage new resident, and what percentage commuter employment. By "resident employment" is meant employees who do not currently reside in the county but who move to the county to work and establish residences there; and by "commuter employment" is meant employees who do not currently reside in the county and who commute to the project site to work but do not establish residences there.

The following postulations concerning employment patterns were based on conversations with individuals in the construction industry, the Texas Industrial Commission, and the U.S. Army Corps of Engineers:

1. All of the indirect requirements will be met by resident employees. Because of the temporary nature of the project and the small number of jobs involved, it seems unlikely

Figure 67

Direct and Indirect Employment Requirements

Time Period (Weeks)	Direct Employment	Indirect Employment	Total Employment
Phase 1:			
1-25	25	1	26
26-31	27	0	27
32-35	36	0	36
36-44	46	1	47
45-46	55	0	55
47	60	0	60
48-50	50	0	50
51-54	109	0	109
55-61	104	0	104
62-63	118	0	118
64-70	142	0	142
71-76	135	0	135
77-79	133	0	133
80-98	117	2	119
99-102	72	0	72
103	43	0	43
104-113	69	1	70
Phase 2:			
1-6	84	0	84
7-52	84	14	98
53-60	127	1	128
61-91	127	17	144
92-96	150	2	152
97	153	0	153
98-103	149	3	152
104	144	0	144

that new residents will move into the area solely in anticipation of securing construction-generated employment.

2. Employees of firms based in Brazoria County will be residents of the county.

3. Firms from outside the county will generally hire unskilled labor locally and bring in skilled workers.

4. A typical maximum daily commuting distance is 50 miles. Construction workers who live more than that distance from the job site tend to become temporary new residents in the surrounding area. Thus for activities other than dredging, it was assumed that 75 percent of the non-local workers of firms from the Houston area (50-75 miles from the site) will commute to the study site. The remainder of the non-local workers from the Houston area, and all of the non-local employees of firms from other than the Houston area will become new residents of Brazoria County and will concentrate in the Brazosport area.

5. Crews on the dredge work one week and then are off a week. While working, they live on the dredge. Thus, it is assumed that dredge workers from outside the county will not move their families to the Brazosport area but rather return to their place of residence during the "off" week.

The application of these postulations to the employment requirements in Figure 67 results in the numbers of resident, new resident, and commuter employees shown in Figure 68. It should be stressed that these estimates are study assumptions (not predictions) made after considering the particular activity in question, employment patterns in the construction industry and discussions with industry officials.

As Figure 68 reveals, the maximum number of new residents in Phase 1 is 40 and in Phase 2 is 48. In order to estimate the project's maximum impact on the surrounding area, it is hypothesized that the new resident employees and their families will locate predominately in the Brazosport area because of its proximity to the construction site. Actual location elsewhere in the county would lessen the impact on the Brazosport area. Since the new resident employees will move with their families, the number of new resident employees provides the key with which new population, new housing units, and new students can be determined.

Figure 68

Resident, New Resident and Commuter Employment Requirements

Time Period (Weeks)	Resident Employment	New Resident Employment	Commuter Employment
Phase 1:			
1-25	7	4	14
26-31	7	6	14
32-35	10	12	14
36-44	20	12	14
45-46	29	12	14
47	29	17	14
48-50	19	17	14
51-54	36	17	56
55-61	34	14	56
62-63	39	16	63
64-70	43	36	63
71-76	39	40	56
77-79	39	38	56
80-98	37	24	56
99-102	37	16	56
103	13	16	14
104-113	18	12	39
Phase 2:			
1-6	25	15	44
7-52	25	15	44
53-60	35	48	44
61-91	35	48	44
92-96	47	48	55
97	50	48	55
98-103	57	48	44
104	52	48	44

New Population. The expected increase in population was calculated by considering the relationship between employment and total population in Texas. Data from the U.S. Census Bureau and the Texas Employment Commission reveals that in 1975 employment in the state equalled

4,986,000, and total population was 12,244,678. Thus, there were 2.46 persons in the total population for every employed person. Application of this multiplier to the new resident employment column in Figure 68 yields the new population estimates over time shown in Figure 69. As discussed above, these people are expected to settle primarily in the Brazosport area.

New population is expected to reach a maximum of 118 in Phase 2. This is less than 0.3 percent of the 1970 population of Brazosport, and equal to about 0.1 percent of the 1975 population of Brazoria County.

Figure 69

New Population and New Students

Time Period (Weeks)	New Population	New Students
Phase 1		
1-25	10	2
26-31	15	4
32-35	30	7
36-44	30	7
45-46	30	7
47	42	10
48-50	42	10
51-54	42	10
55-61	34	8
62-63	39	9
64-70	89	21
71-76	98	23
77-79	93	22
80-98	59	14
99-102	39	9
103	39	9
104-113	30	7
Phase 2:		
1-6	37	9
7-52	37	9
53-60	118	28
61-91	118	28
92-96	118	28
97	118	28
98-103	118	28
104	118	28

New Housing Units. Each new resident employee is assumed to represent one household, implying that the number of housing units required by the population influx is equal to the number of new resident employees. Because it is likely that the new residents will be temporary, that is, live in the area for the duration of the project, it is postulated that they will be primarily interested in renting an apartment, house, or mobile home rather than purchasing a house.

Discussion with officials from the Brazosport Chamber of Commerce reveals that about 1200 apartment units have been built in the past three years, in addition to motel expansions and new houses, some of which are rented. The number of renter-occupied units is currently about 13,500 and the rental occupancy rate is close to 100 percent, with a two-to-three week waiting

period. About 20 percent of the rental units are apartments, 68 percent houses, and 12 percent mobile homes.

The options open to a construction worker planning on moving with his family to the Brazosport area for the duration of the project include the following:

1. He could find a suitable rental unit immediately.
2. He might live in a motel or a beach cottage in the off season for two or three weeks, until a unit becomes available.
3. He might bring in his own mobile home.
4. He might rent in other areas of the county, such as Angleton or West Columbia.

Because of the small number of households involved, it seems unlikely that new units would be constructed solely to handle the increase in population due to this project. Thus, in this study it is assumed that the new residents will either select housing from among the existing rental units or bring a mobile home into the Brazosport area. If a unit is not immediately available, temporary arrangements will be made until suitable housing becomes available.

As discussed above, it is postulated that the new residents will locate primarily in the Brazosport area. As a result, most of the population-induced effects, such as demand for housing, new students, and demand for social services, will be felt primarily in the Brazosport area.

New Students. Like new population, the number of new elementary and secondary school students brought into the area by the construction activities was calculated through the use of a multiplier.

Based on data from the Texas Education Agency, average school enrollment in Texas in 1975 was 2,931,192, compared with a total Texas population equal to 12,244,678 (U.S. Census Bureau data). Thus, there were 0.236 students per person in the state that year. This multiplier expresses the relationship between population and school enrollment and is applied to expected new population (shown in Figure 69) to derive the estimated number of new students, also presented in Figure 69.

The maximum number of new students occurs during Phase 2 and is equal to 28. This compares with total enrollment in the Brazosport Independent School District during the 1975-1976 school year of 10,316.

Personal Income

Personal income, both primary and indirect, generated in Brazoria County by the two phases of the canal construction and industrial site preparation is shown in Figure 70. The primary income is equal to the wages of the resident and new resident construction workers directly employed on the project. Based on information from the Texas Industrial Commission, the average hourly wage for all activities except dredging is assumed to be $3.50 for unskilled workers and $7.00 for skilled and supervisory personnel. Wage information for workers on the dredge was obtained from the U.S. Army Corps of Engineers; hourly wages ranged from $4.08 to $6.52.

Indirect personal income was estimated by using the indirect personal income coefficients of the BC I/O model. This coefficient is equal to 0.13215 per dollar of primary expenditure made in Brazoria County per year. The product of the coefficient and direct expenditures in Brazoria County (taken from Figure 66), adjusted for time, equals the indirect income in the county generated by the project.

Of the $4.2 million in primary income generated by both phases of the project, $2.2 million, or about 51 percent, is assumed to accrue to resident or new resident employees. When the indirect income of over $280,000 is considered, total income postulated to be received within the county exceeds $2.4 million.

Figure 70

Primary and Indirect Personal Income

Time Period (Weeks)	Primary Income[1] Non-Residents[2]	Residents[3]	Indirect Income	Total Income Received by Residents of Brazoria County[4]
Phase 1:				
1-25	$ 85,750	$ 55,125	$ 3,501	$ 58,626
26-31	20,580	16,170	790	16,960
32-35	13,720	18,130	426	18,556
36-44	30,870	56,228	3,863	60,091
45-46	6,860	15,925	375	16,300
47	3,430	9,188	97	9,285
48-50	10,290	22,417	682	23,099
51-54	52,496	37,934	641	38,575
55-61	91,868	59,526	1,843	61,369
62-63	29,678	19,212	165	19,377
64-70	103,873	55,728	1,813	57,541
71-76	78,744	92,917	1,993	94,910
77-79	39,372	44,988	487	45,475
80-98	249,356	215,101	16,156	231,257
99-102	52,496	37,444	636	38,080
103	3,430	5,880	30	5,910
104-113	95,550	93,100	3,901	97,001
Total	$ 968,363	$ 855,013	$ 37,399	$ 892,412
Phase 2:				
1-6	61,740	45,570	1,020	46,590
7-52	473,340	349,370	93,603	442,973
53-60	82,320	133,280	4,851	138,131
61-91	318,990	516,460	112,366	628,826
92-96	62,475	85,750	12,624	98,374
97	12,495	19,722	376	20,098
98-103	61,740	127,155	18,502	145,657
104	10,290	20,213	413	20,626
Total	$1,083,390	$1,297,520	$243,755	$1,541,275

1. Assumes a work week of 35 hours per employee.
2. Non-residents are commuters.
3. Includes both "resident employment" and "new resident employment."
4. Sum of indirect income and primary income received by residents, including new resident employees.

State Tax Revenue

Direct and indirect tax payments to the state government are calculated by using the appropriate tax payment coefficients from the BC I/O model for firms located in Brazos County, and for the State of Texas Mini-Input-Output-Model for firms located outside the county. These coefficients are displayed in Figure 71; the state tax payments are shown in Figure 72.

It must be noted that the tax payments for any given time period in Figure 72 represent only the amount of tax dollars accruing to the state government during that time period. They do not indicate that the state will actually collect that amount of tax revenue during that particular time period. Indeed, in many cases there may be a significant time lag between the time that taxes accrue to the state and the time at which it actually collects these taxes.

Total tax revenue accruing to the state would exceed $470,000. Of this amount, $54,000 would accrue during Phase 1, and $417,000 during Phase 2.

Figure 71

State Tax Payment Coefficients Construction Sector
($ Per $ of Total Expenditure Per Year)

Location of Firm	Direct	Indirect
Brazoria County	0.002011	0.001486
Outside of Brazoria County	0.002327	0.018973

Figure 72

State Tax Payments

Time Period (Weeks)	Direct	Indirect	Total
Phase 1:			
1-25	$ 255	$ 2,079	$ 2,334
26-31	120	977	1,097
32-35	53	434	487
36-44	335	2,245	2,580
45-46	23	117	140
47	6	29	35
48-50	46	256	302
51-54	121	984	1,105
55-61	370	3,014	3,384
62-63	35	283	318
64-70	426	3,471	3,897
71-76	272	2,214	2,486
77-79	68	554	622
80-98	2,723	22,204	24,927
99-102	121	984	1,105
103	3	27	30
104-113	1,008	8,222	9,230
Total	$ 5,985	$ 48,094	$ 54,079
Phase 2:			
1-6	$ 443	$ 3,615	$ 4,058
7-52	26,058	212,465	238,523
53-60	1,109	9,044	10,153
61-91	16,656	135,803	152,803
92-96	826	4,070	4,895
97	28	159	187
98-103	1,170	5,491	6,661
104	28	22	50
Total	$46,317	$370,669	$416,986

The state can be expected to experience increased expenditures in the county in such areas as health, education, and law enforcement due to the increased population resulting from the project. The net change in state expenditures, however, will depend to some extent on the geographic origin of the new residents. If they come from other parts of the state, the increased expenditures in Brazoria County would be partially offset by the amount that the state would have spent to service the same population in another county. However, if new residents move into the state to fill project employment requirements (direct or indirect), the state can be expected to experience an increase in demand for public services, whether expenditures are made in Brazoria or other counties, such as Harris and Galveston.

Fiscal Impact on Local Governments

The local governments in Brazoria County are expected to experience increased tax revenue and infrastructural costs as a result of the canal construction. The former will occur due to the employment and income generated by the project, and the latter as a consequence of expanded demand for public services. These fiscal effects are considered in this section. The expected tax revenues and infrastructural costs are first estimated and then compared in order to determine anticipated budgetary surpluses or deficits over time.

It should be noted that, due to data limitations, the fiscal effects on specific units of local governments cannot be ascertained. For example, the Brazoria County I/O model was used to derive tax revenues; revenues accruing to all units of local government, including the county government, result. The assumption that all economic activity associated with the canal construction will occur in Brazosport and thus all tax revenue will accrue to Brazosport area local governments would seem to be unwarranted: first, some revenue will accrue to the county government; second, not all of the purchases in the county by the construction sector will necessarily be made in Brazosport. The effects will be felt by Brazosport, however, to the extent to which primary expenditures are made in the area, and new resident employees and their families locate in Brazosport.

Tax Revenue. Direct and indirect tax payments to local governments are calculated by using the tax payment coefficients from BC I/O model. These coefficients are displayed in Figure 73; the local tax payments are shown in Figure 74.

As with the state tax payments, the tax payments shown in Figure 74 represent only the revenue accruing to local governments during the respective time period. The amount of tax revenue actually received during each time period may differ due to normal time lags between tax accruals and tax collections.

Total tax revenue accruing to local governments approximates $13,800. As discussed above, this revenue cannot be allocated to specific units of government because of data limitations. Because of the expected concentration of economic activity associated with the construction of the canal in the Brazosport area, however, much of the tax revenue is expected to accrue to Brazosport. Dispersion of subsidiary activity to other areas of the county, such as to Angleton, would imply, of course, dispersion of the tax revenue as well.

Infrastructural Costs. Infrastructural costs to local governments in Brazoria County resulting from canal construction can be explained by considering per capita service costs as they are now constituted.

Per capita cost can be multiplied by the number of anticipated new residents to obtain a figure which represents an increase in costs of providing services to those new residents. For example, if City A's expenditures are $2,500,000 annually and its population is 10,000, City A's per capita annual expenditure is $250. If the population of City A were to increase by 100 persons, one could reasonably expect that, all other things being equal, City A's annual expenditures would increase by $25,000 (100 x $250). Such a procedure, of course, assumes that an increase in population is the primary factor which leads to increased expenditures. It is likely that other variables also influence the level of expenditures—geographical size of the governmental unit, government regulations, and employment statistics are just three examples. But when those intervening variables are held constant, as this procedure assumes, increase in population becomes the dominant variable.

This procedure incorporates these additional assumptions:

1. The cost of providing services to the existing population and the cost of providing services to an increase in population (marginal cost) are comparable. While there is some evidence to indicate that service costs at the margin are greater than ongoing costs, this

Figure 73

Local Tax Payment Coefficients
Construction Sector, Brazoria County
($ Per $ of Primary Expenditure in the County Per Year)

Direct	0.004129
Indirect	0.002333

Figure 74

Local Tax Payments
Brazoria County

Time Period (Weeks)	Direct	Indirect	Total
Phase 1:			
1-25	$ 109	$ 62	$ 171
26-31	25	14	39
32-35	13	8	21
36-44	121	68	189
45-46	12	7	19
47	3	2	5
48-50	21	12	33
51-54	20	11	31
55-61	58	33	91
62-63	5	3	8
64-70	57	32	89
71-76	62	35	97
77-79	15	9	24
80-98	505	285	790
99-102	20	11	31
103	1	1	2
104-113	122	69	191
	$1,169	$ 662	$ 1,831
Phase 2:			
1-6	$ 32	$ 18	$ 50
7-52	2,925	1,652	4,577
53-60	152	86	238
61-91	3,511	1,984	5,495
92-96	394	223	617
97	12	7	19
98-103	578	327	905
104	13	7	20
	$7,617	$4,304	$11,921

procedure assumes that a unit of government's annual expenditures for physical plant and operating costs can absorb an increase in population at the same per capita rate.

2. All expenditures of a unit of government can be expressed meaningfully in, and are therefore included in, the cost per capita figure.

3. Increased services will be provided in the short-run.

In order to derive local governmental costs per capita in Brazoria County, the following data (sources are in parentheses) were collected.

1. The study site's 1972 population estimate (U.S. Department of Commerce, Bureau of the Census; Series P-25, No. 535; November, 1974).

2. Total expenditures of local governments within the study site (less intergovernmental transfer of funds) for Fiscal Year 1972 (U.S. Department of Commerce, Bureau of the Census; *1972 Census of Governments,* Volume 4, Numbers 3, 4, and 5; October, 1974). Expenditures, both capital outlay and operating expenses, for the following categories were included in the total:

a.	Education	j.	Natural Resources
b.	Highways	k.	Housing and Urban Renewal
c.	Public Welfare	l.	Corrections
d.	Hospitals	m.	libraries
e.	Health	n.	Financial Administration
f.	Police Protection	o.	General Control
g.	Sewerage	p.	General Public Buildings
h.	Sanitation other than Sewage	q.	Interest on General Debt
i.	Parks and Recreation	r.	Other and Unallocable

Figure 75 summarizes per capita expenditures for Brazoria County. When the data are applied to the projected increases in population over time, costs to the county and municipal governments in Brazoria County result. These cost estimates are summarized in Columns D and E of Figure 76 and are derived by multiplying the projected population figures by the appropriate per capita annual service cost and adjusting to correspond to the length of the time period in Column A. The cost to local governments includes county government expenditures.

Expenditures of the local units are estimated to approach $86,600 including about $12,600 by the county government. Since most of the new resident employees and their families are expected to locate in the Brazosport area, the Brazosport governments are expected to bear much of the increase in municipal infrastructural costs associated with the population influx. As with tax revenue, however, dispersal of the new population will result in dispersal of these costs.

Fiscal Impact. The above cost data present an incomplete picture of the two-sided fiscal impact; they must be subtracted from the corresponding tax revenues to show the net gains or losses to government treasuries from the canal construction and site preparation phases of the project. This was also done in Figure 76; column F reveals the resulting deficits for local governments.

Figure 75

Government Expenditures
Brazoria County

1. Population (1972 Estimate)	113,000
2. Local Government Expenditures	$40,367,000
3. Local Government Per Capita Expenditures	$357
4. County Expenditures (Included in Item No. 2)	$6,152,000
5. County Government Per Capita Expenditures (Included in Item No. 3)	$54

Figure 76

Fiscal Impact Brazoria County

A Time Period (Weeks)	B[1] Population	C[2] Local Tax Revenue	D Cost to Local Governments (Pop. x $357 Annually)	E[3] Cost to County Governments (Pop. x $54 Annually)	F Local Tax Revenue Surplus or Deficit
Phase 1:					
1-25	10	171	1,716	260	(1,545)
26-31	15	39	618	93	(579)
32-35	30	21	824	125	(803)
36-44	30	189	1,854	280	(1,665)
45-46	30	19	412	62	(393)
47	42	5	288	44	(283)
48-50	42	33	865	131	(832)
51-54	42	31	1,153	174	(1,122)
55-61	34	91	1,634	247	(1,543)
62-63	39	8	536	81	(528)
64-70	89	89	4,277	647	(4,188)
71-76	98	97	4,037	611	(3,940)
77-79	93	24	1,915	290	(1,891)
80-98	59	790	7,696	1,164	(6,906)
99-102	39	31	1,071	162	(1,040)
103	39	2	268	41	(266)
104-113	30	191	2,060	312	(1,869
		$ 1,831	$31,224	$4,275	($29,393
Phase 2:					
1-6	37	50	1,524	231	(1,474)
7-52	37	4,577	11,685	1,767	(7,108)
53-60	118	238	6,481	980	(6,243)
61-91	118	5,495	25,114	3,799	(19,619)
92-96	118	617	4,051	613	(3,434)
97	118	19	810	123	(791)
98-103	118	905	4,861	735	(3,956)
104	118	20	810	123	(790)
		$11,921	$55,336	$8,371	($43,415)

1. Taken from Figure 7.
2. Taken from Figure 12.
3. The figures in Column E are included in the corresponding figures of Column D.

fiscal impact on any governmental unit will vary depending upon the level of construction-related expenditures (which would generate tax revenue) and the number of new resident employees (which would increase demand for public services and thus infrastructural costs) experienced by that unit. The Brazosport area is expected to be most heavily impacted both by the construction of the canal and industrial site simply because the site is within the Brazosport area.

Economic Impact Analysis References

Bankers Trust Company. 1976. *Capital Resources for Energy Through the Year 1990.* Prepared by the Energy Group, Bankers Trust Company, New York.

New England River Basins Commission. 1976. *Offshore Facilities Related to Offshore Oil and Gas Development Factbook.* Boston, Massachusetts: New England River Basins Commission.

Oil and Gas Journal. August 20, 1973. Petroleum Publishing Company, Tulsa, Oklahoma.

Seadock, Inc. 1974. *Environmental Report.* Texas Offshort Crude Oil Unloading Facility.

Texas Water Development Board. March 16, 1977. 1972 I/O Model, Draft Version, Computer Printout.

Texas Water Development Board. June 7, 1977. Texas 1972 Employment Multipliers. Draft Version, Computer Printout.

U.S. Department of Commerce. 1976. *Survey of Current Business,* July, 1976.

Environmental Impact Analysis

The environmental assessment of the inland canal project scenario is divided into two parts, an impact analysis of inland canal construction and site preparation, and a more general impact issue analysis of inland industrial development and operation. This part assesses the impacts of initial construction and preparation activities.

The environmental impact analysis of inland canal construction and site preparation addresses both ecological impacts and other environmental effects. This analysis is presented in five sections:

1. primary ecological alterations,
2. ecological systems analysis,
3. ecological attribute alterations,
4. other environmental impacts, and
5. impact evaluation.

The first three sections are presented in the format of an impact measurement procedure or "activity assessment routine" which was prepared as part of the Texas Coastal Management Program (TCMP, 1976, appendices). Other environmental impacts, which are those not identifiable as results of ecological value changes and those of Phase 2 activities, are presented separately in the fourth section. The last section presents parameters which could be recorded to monitor ecological change should such a project come to fruition, and also discusses several project adjustments which could lessen the extent of impact.

Primary Ecological Alterations

Introduction and definitions. The ecological analysis assesses the effects of activities in particular resource areas. A study of "primary ecological alterations" provides an interface between

The existence of a deficit is not surprising, considering the assumptions made concerning expenditure and employment patterns. First, much of the construction work is expected to be performed by firms located outside the county These firms are expected to make fewer expenditures within the county than would a local firm. It was assumed, in fact, that the major expenditures in the county for non-local firms would be for wages for resident and new resident employees, for expendables such as subsistence for the dredge, diesel fuel, and lubricating oil, and for high volume, low bulk supplies such as readymix. Capital equipment and spare parts would come from the normal supply sources outside of the county, and the firm's physical plant would be outside of the taxing jurisdictions of government units in Brazoria County. Most of the wages paid to commuters can be expected to be spent in their places of residence outside of the county. More tax revenue would accrue to local units of government if more of the activities were performed by local firms, or if the expenditures of the non-local firms within the county were greater.

Second, new population, new student and new infrastructural cost estimates were based on postulations concerning the origin of employment of the construction workers. Fewer new residents than postulated would imply smaller increases in population and infrastructural cost.

Third, a specific unit of government may have a lower per capita cost than the average per capita cost of all local governments in the county of $357. The per capita costs in 1972 in Freeport and Lake Jackson (two municipalities in Brazosport), for example, were $94 and $101, respectively. Units of governments with significantly lower per capita costs than the county-wide average would experience significantly lower infrastructural costs and thus a lower deficit.

Summary of Economic Impacts

The economic impacts expected as a result of the construction of the canal and preparation of the industrial site are summarized in Figure 77. Perhaps the most salient feature is the existence of deficits to local governments as a whole in the county during the construction phase. The actual

Figure 77

Summary of Economic Impacts, Canal Construction and Industrial Site Preparation

Impact	
1. Primary Expenditures	
In Brazoria County	$6,626,900
Total	$53,300,000
2. Total Employment	
Minimum	26
Maximum	144
3. New Population in Brazoria County	
Minimum	10
Maximum	118
4. New Students in Brazoria County	
Minimum	2
Maximum	28
5. Personal Income	
In Brazoria County	$2,433,687
Total	$4,485,440
6. Total State Tax Revenue	$471,065
7. Fiscal Impact on Local Governments in Brazoria County	
Total Local Tax Revenue	$13,752
Total Cost to Local Government	$86,560
Total Deficit	($72,808)

activities in a resource area and the ramifications of those activities in the resource area or ecosystem.

Activities can be described as specific actions which impinge on resources either by construction-oriented development or by operation and maintenance. The Phase 1 inland canal project's activities considered in this part of the environmental assessment may be broken into two stages: construction of the inland canal and turning basin and industrial site preparation. The activities within these stages include site clearing, relocations, drainage control, excavation and material disposal, water quality control, and flood protection. A specific listing, description, and location of these activities is presented in Chapter III-D.

Resource areas, composed of intrinsically related biotic and abiotic components, are presented as mappable units and are defined by relationships between sustaining environmental factors, or parameters, and the products which flow from them. Each resource area is described in terms of several classes of distinguishing features: water characteristics, water movement, subaerial or subaqueous bottom morphometry, substrate, and characteristic biota. Any given location may be identified as a certain resource area and described by these features.

The resource areas, or ecosystems, which occur in the study area were described in Chapter II—B, Description of the Project Area Environment. The inland canal-industrial site corridor, selected in Chapter III-C, is located in the following resource areas: brackish-water marsh, prairie grassland, and fluvial woodland (see Figure 49 and Map No. 3). These ecosystems will be analyzed in greater detail in the following section.

Approach to Determining Primary Ecological Alterations. Figure 78 presents a cross-tabulation of this project's activities and the resource areas in which they would occur. Some of the activities occur at locations that have been altered by previous activities in the sequence.

Primary Ecological Alterations (PEA) are a reflection of the principal ecological processes and features which may modify or disrupt ecological systems through a chain of events. As a conceptual interface between activities in resource areas and ecosystem changes, the PEA's show the first, most direct ecological response to activities and thereby define the points of access to the ecological systems impact analysis.

A list of primary ecological alterations is presented in Figure 79. The list is generally based on a formulation by Texas Coastal Management Program (1976). The categories were drawn from several sources, including Sorensen (1971), Dickert (1974), Dee, et al. (1973), Rice Center for Community Design and Research (1974, 1976), Moore, et al. (1973), and Leopold, et al. (1971). Primary ecological alterations in Figure 79 are presented in five sequential categories: direct biotic effects, transfer of materials, changes in properties, energetic changes, and changes in water movement. Each category is prefaced by a question which specifies the condition by which any PEA in that category can be identified.

The PEA categories are arranged sequentially, from the top to bottom of the list. This arrangement avoids identifying correlated responses between natural processes and the resulting states or movements of materials. For example, increased rate of water flow causes erosion of sediment, yet increased rate of flow is the primary alteration—erosion of sediment is a subsequent response. Therefore, in reading down the list, sediment removal would be identified as a primary alteration only if it was indeed a direct and immediate alteration (e.g., of topsoil stripping).

Several examples may serve to illustrate how decision criteria may be applied in determining primary ecological alterations.

Vegetation or consumer removal would result from the first activity if the sequence (e.g., topsoil stripping), but not from subsequent activities occurring at a site already altered by such biotic removal;

Figure 78

Inland Canal Project Activities and Resource Areas

ACTIVITIES	RESOURCE AREA: Fluvial Woodland	Prairie Grassland	Brackish Water Marsh
Clearing (for roads, sites, etc.)	▲		
Grubbing	▲	▲	
Topsoil Stripping	▲	▲	
Topsoil Stockpiling	▲	▲	
Pipelining (relocations)	▲	▲	
Land-based excavation to water table depth		▲	
Water pond excavation (reservoir, waste treatment, cooling)	▲		
Construct flood protection levees	▲	▲	
Canal diking		▲	▲
Collection and diversion of Redfish Bayou		▲	
Diversion discharge into Redfish Bayou			▲
Dredging of canal and harbor to project depth		▲	▲
Disposal of material in containment levees and compaction		▲	
Site compaction, grading, stabilization & cleanup	▲	▲	
Vehicle traffic along non-constructed routes during construction	▲	▲	
Railroad base construction		▲	

Figure 79
Potential Primary Ecological Alterations

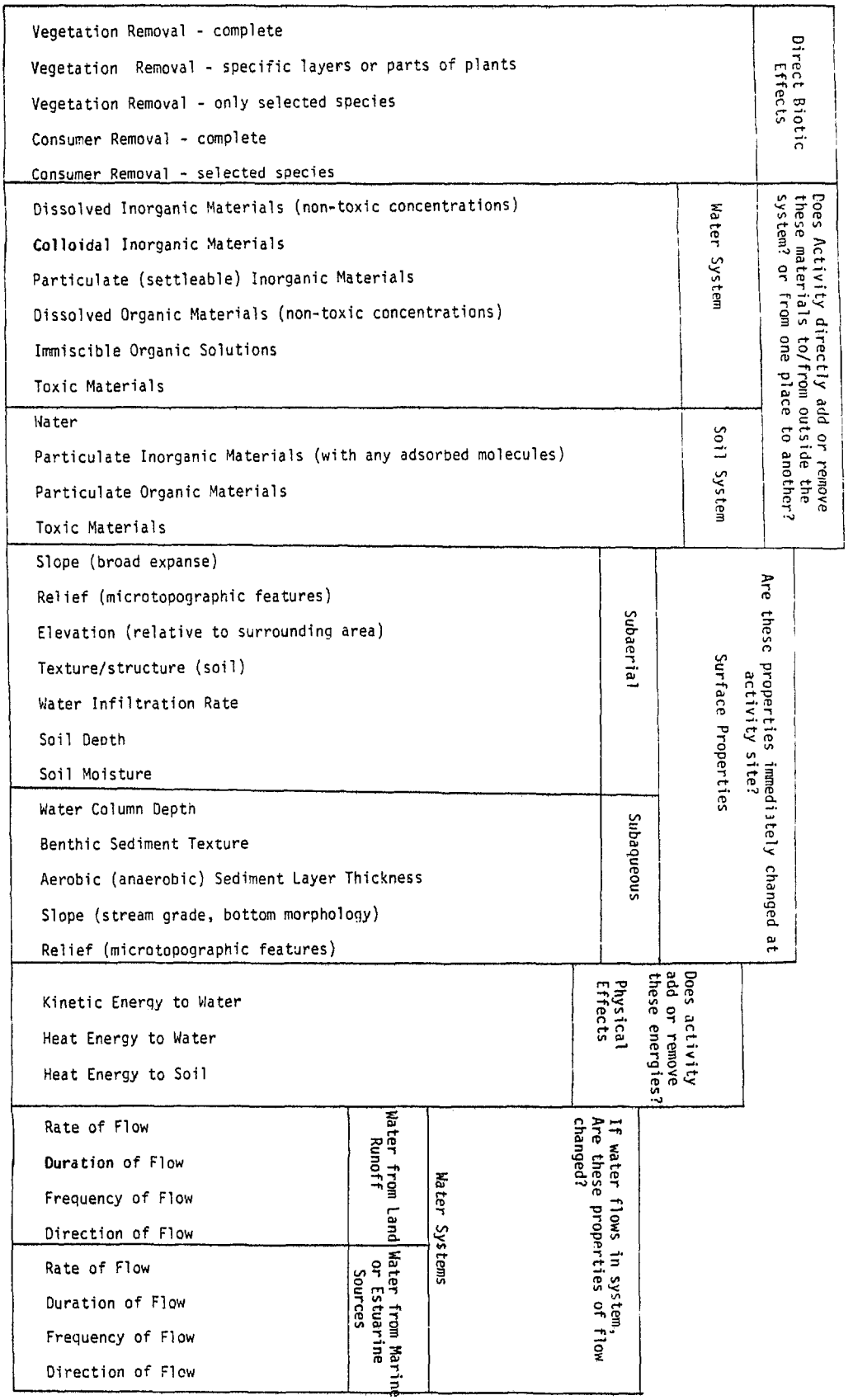

Particulate inorganic materials of water system would result if the activity exposes sediment to increased erosion potential or directly adds sediment to the water system, but not if the activity changes water flow dynamics which then effect erosion;

Water in soil system would result if the activity directly changes the amount of water which may enter the soil (e.g., ponding), if the activity interrupts groundwater/land surface relations, or if the activity simply adds water to the soil;

Texture/structure (soil) as subaerial surface properties would result if the activity directly adds or exposes material of a texture different from the previous surface, or if the activity changes the properties of present material *in situ*, but would not result if soil texture change is part of the activity (e.g., scarifying and compaction of dredge-fill material in containment areas);

Water infiltration rate as subaerial surface property would result if the activity changes infiltration rate (e.g., paving) or if textural changes, as above, result in different permeabilities; and

Rate and duration of water flow would result if channel or surface morphometry is changed, or if changed surface properties allow different flow states.

Primary Ecological Alterations. Figure 80 displays a matrix of the inland canal project activities by resource area and the primary ecological alterations resulting from the activities. The resource area-activities axis is a reorganization of Figure 78. The identification of the PEA's resulting from the project activities followed the previously outlined procedure. Each PEA was evaluated in a manner similar to the preceding decision criteria.

Three major patterns are apparent in the PEA matrix (Figure 80). First, certain PEA's stand out as most frequently resulting from the various activities. Such common PEA's include vegetation removal, exposure of particulates to the water system, removal of soils and substrates, changes in relief, and changes in water flow properties. These primary ecological alterations would be expected in a major earth-moving project as inland canal site preparation and excavation.

Secondly, the common primary alterations are notably similar between fluvial woodlands and prairie grasslands. Many activities are in common between resource areas. The PEA's represent changes in the influence of processes common to most ecological systems, as well as changes in intrinsic environmental characteristics of most ecological systems.

Finally, certain types of activities have a larger number of primary ecological alterations than have others, as would be expected. These activities include the major earthworks of canal excavation, diking and levee-building, and topsoil stripping and stockpiling. Drainage control or modification activities also result in a large number of PEA's. These two major activity types are significant because of the important relationships between water movement, sediment budgets, substrate characteristics, and microtopography in the coastal environment. While all of the activity PEA's are input to the ecological systems analysis, these PEA's resulting from major earthwork and drainage control activities merit special attention.

Ecological Systems Analysis

Introduction. Each ecological system in the project area is made up of a number of components: populations of organisms, substrates, drainage patterns, and other elements. Each system has the characteristics of these components yet also has characteristics of its own which result from unique combinations and interactions of the components. The food web and the uptake of various limiting materials, such as nutrients and water, are the typical linkages between each system's components. Some components of the system exert control over other components. Various forms of control include competition for food, water, or nutrients; regulation of nutrient and sediment

PRIMARY ECOLOGICAL ALTERATIONS

| ECOSYSTEM | ACTIVITY | Direct Biotic Effects | Does Activity directly add or remove these materials to/from outside the system? or from one place to another? | | |

inflow by the extent of water movement; and regulation of evaporation rate by the extent of plant cover and effective soil heat. In summary, each ecological system may be defined as an interacting, interdependent group of components, functioning as a whole. Each component has characteristics, but is linked to, may influence the control of, or be controlled by, other components. By knowing details of how each component operates and relations between components, the characteristics of the whole system may be described.

This section expands the description of the project area environment (Chapter II-B) by describing the ecological function of each ecosystem, and the ecological links between ecosystems, in the area around Jones Creek which would be affected by the inland canal development postulated in this study. Four systems are analyzed: the abiotic system, the fluvial woodland ecological system, the coastal grassland ecological system, and the brackish marsh ecological system. The distinction of an abiotic system separate from the ecosystems is a convenience allowed by the similarity of physical and chemical processes which operate in each ecosystem, which provide support for each ecosystem in the form of storages of various limiting factors, and which act as connecting links between adjacent ecosystems. Each ecosystem is, in reality, intimately associated with the abiotic system.

The description of each system details the characteristic components, energy and material flows, regulating or modifying factors, and linkages between systems. Linkages between ecosystems are conceptually described as being, in part, through the physical processes of the abiotic system. Background information on each ecosystem is presented in Chapter II-B.

Abiotic System. The abiotic system describes the physical and chemical processes and components which are common to the coastal ecosystems, as well as microbial activity which is more intimately associated with a general abiotic system than with a particular ecosystem.

The abiotic system receives outside-of-the-system inputs in the form of sunlight, Gulf salt spray, atmospheric water and gases, surface water from farther inland, and groundwater flowing down a hydrologic gradient. The abiotic system also receives inputs from the particular ecosystems which it supports. Such ecosystem inputs include nutrients and macro- and micro-plant detritus. The abiotic system provides outputs as flows to each ecosystem, upon which the ecosystems depend. Such abiotic outputs include surface salts, soil moisture, nutrients, soil heat, and surface water. Finally, certain outputs of the abiotic system are lost-from-the system, at least temporarily, such as evaporated water and leached nutrients and salts.

The abiotic system is dominated by two interrelated subsystems: the hydrologic cycle and the nutrient cycle. The components and flows within each of these subsystems is discussed in this section. The section points out the factors which regulate the flow within and between each subsystem. Some of these regulating factors are not unique to the abiotic system, but also regulate in various ways the flows in each ecological system. Finally, the relation of each abiotic subsystem "output" to the common ecological system "requirements" is described.

Hydrologic cycle. The project area corridor in the vicinity of the community of Jones Creek lies in a coastal watershed between the Brazos and San Bernard Rivers. The "water economy" of the local hydrologic system includes "new" input from rainfall, Brazos River flooding, tidal action, and from groundwater flow in the upper Chicot Aquifer and in shallow water table aquifers. There is effectively no surface water runoff into the local hydrologic system because of the configuration of topography and river courses. Brazos River flooding accounts for all runoff into the system.

Water is stored in the abiotic system as either surface water or as groundwater. (The reader is urged to keep in mind that these storages can be considered as part of each ecological system, or as one abiotic system storage, generalized for all local ecosystems.) The surface water storage includes surface runoff within and between local ecological systems; standing water bodies such as McNeal Lake and other ponds in the brackish marsh; and flowing watercourses such as Jones Creek, Redfish Bayou, and their tributaries.

The surface and groundwater storages interface through soil water storages. Two soil water storages (macropore and micropore water) are distinguished by soil structure and texture. The macrostructure of a soil provides larger void or pore space (macropore) in a soil horizon than does intergranular porosity (micropore). Clayey soils tend to exhibit various macrostructures because of their particle cohesiveness. The more sandy is a soil, less will there be a distinction between soil structure and texture.

Surface water percolation into the macropore space of the soil is regulated by vegetative cover and land slope. Cover and increasing land slope tend to reduce percolation rates. Water will more rapidly fill or drain macropore space (due to soil structure) than will it fill or drain micropore space (due to soil texture). Water permeating down through the soil horizons may enter the groundwater storage if the depth to the groundwater surface is greater than a certain distance below the land surface. The rate and extent of downward percolation is affected by soil structure, texture, and the presence of micro-detritus which has high water retention properties. However, in much of this low-lying coastal area, the groundwater surface comes close to or intersects the land surface. Groundwater directly contributes to the standing water of the brackish marshes between the Brazos and San Bernard Rivers.

Evaporation takes place both from the surface of standing water and from macropore water. The rate of evaporation from either storage is regulated by various climatic conditions. The rate of micropore water evaporation is also controlled by soil heat, vegetative cover, soil texture, and the presence of water-retaining detritus. Soil moisture is the major contribution of the abiotic hydrologic cycle to vegetative growth. Surface water itself also affects the distribution and abundance of community species, and is, in fact, one of the major driving forces in all of the local ecological systems.

Nutrient Cycle. The nutrient cycle is a major, complex part of the abiotic system. The components, processes, and flows of the nutrient cycle are only briefly itemized here as its detailed description is beyond the scope of this section. The description is general in application and not intended as a specific description of this cycle in the project area.

There are three main sources of material stored in the nutrient cycle (these sources are arbitrarily selected as the starting point in the cycle description), which are: plant material from the ecosystems; inorganic nutrients bound with sediments; and marine salts, either relict in coastal sediments or from salt spray.

Plant material is stored as macro-detritus, micro-detritus, or as available nutrients. Macro-detritus consists of dead leaves, stems, roots, and general plant litter. Micro-plant detritus results from oxidation (with volatilization) of macro-plant detritus by burning; incomplete digestion by consumers, including insects and worms; and by bacterial action. Macro- and micro-detritus may be converted to directly available nutrients by burning.

Silicate clays are the most important source of bound inorganic nutrients. In addition to the exchangeable bases in the sheet silicate structure, clay particles contain adsorbed organic and inorganic molecules which are additional nutrient storages. There is a physical/chemical/biological balance between bound inorganic nutrients and available nutrients in the surface soil where most of the nutrient cycle processes occur. This dynamic balance is summarized in Figure 81. The flows in either direction are regulated by soil moisture, soil water pH, and bacterial action. The pH is an especially significant factor.

A final source of potential nutrients is salt spray which coats both plant and substrate surfaces. Rainfall washes these surface salts into the soil where, once dissolved, they add to the storage of available nutrients. Relict marine salts in the substrates are also contained in the "available nutrient" storage.

Figure 81
Nutrient - Sediment Relationship

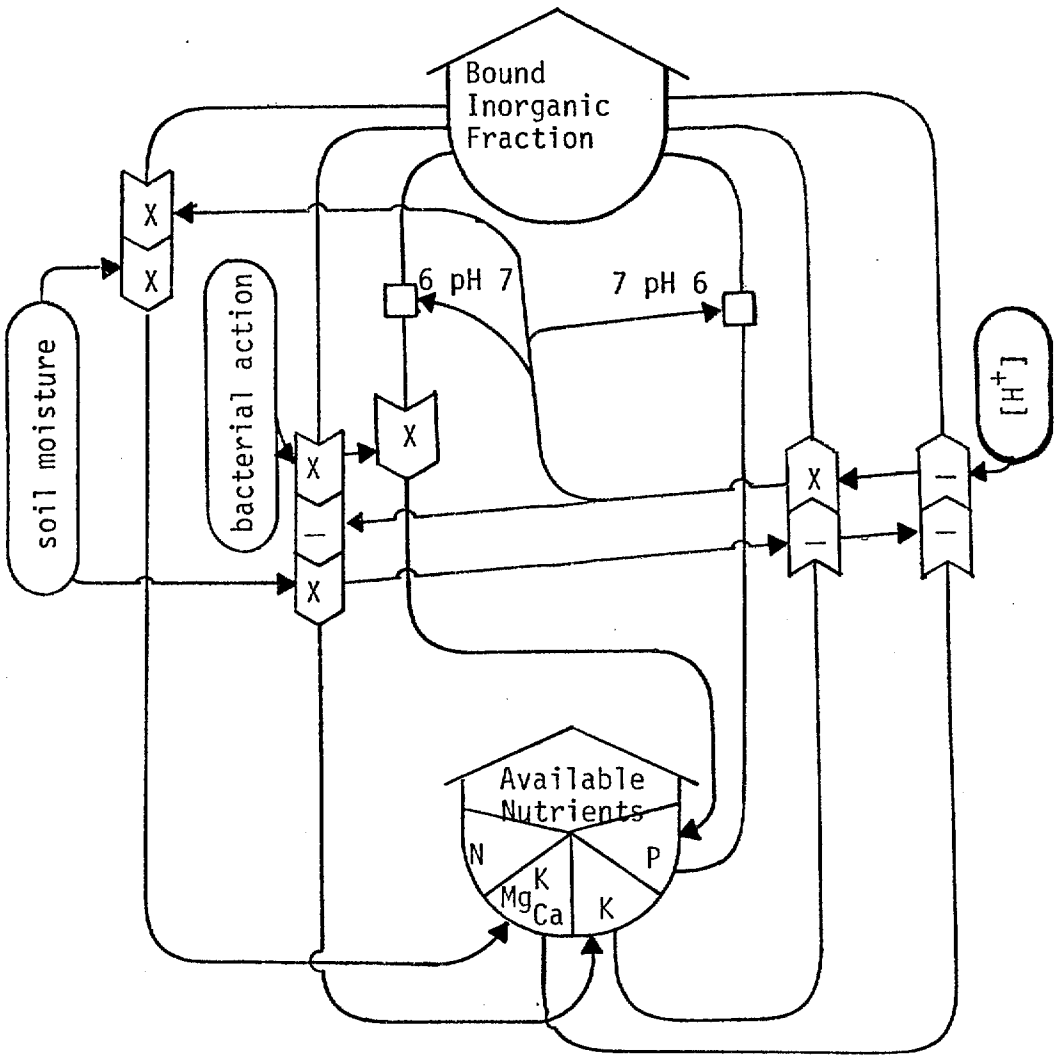

Flow workgate ; X = positive alteration, — = negative alteration

Sensing switch

Storage

Flow regulator

The final, major component of the nutrient cycle may be called bacterial processes. Active bacteria in the soil include nitrifying bacteria, denitrifying bacteria, and nitrogen-fixing bacteria. Detritus, nitrogen compounds, and dissolved organic matter available to nitrifying bacteria, or nitrobacteria, is enzymatically oxidized to form free ionizable nitrate. Denitrifying bacteria biochemically reduce detritus, dissolved organic matter, and nitrogen compounds, especially of nitrate. Denitrification is thought to be the most widespread type of nitrogen volatilization (Buckman and Brady, 1969). Nitrogen-fixing bacteria take free nitrogen from soil air, and synthesize it into complex forms. The fixing takes place symbiotically in root nodules in certain plants. Bacterial activity is affected by such factors as soil heat, soil water pH and aeration, moisture, and presence of exchangeable bases. Some of the nutrients generated by the bacterial decomposition of organic material are returned to available nutrient storage, some is made directly available to plants, and some are lost by soil leaching. Some elemental products of the bacterial processes are lost to the atmosphere.

Other Aspects. Several other aspects of the abiotic system are important. They have, in various extents, been assumed in the discussion of the hydrologic and nutrient cycles. Soil heat is an important limiting or regulating factor of several physical/chemical/biological processes including, for example, evaporation and microorganismal activity. Soil heat is a function of incident sunlight, regulated by the darkness of soil color (amount of organics), and by vegetative cover. Soil heat may be temporarily increased by fire. A critical soil temperature is 100° C., above which most soil organisms are killed.

Soils have been discussed as water-containing regulators of hydrologic rates (structure and texture) and as the site of microbial activity. The composition of most of the project area's soil is mineral clays, high in organic content and water-holding capacity. The coarser textured soils, as along the ridge west of Jones Creek, tend to be drier and more drained. Soil aeration is an important limiting factor of plant growth and microbial activity. It is controlled by the structure and texture of the soil, by soil water content, and by infaunal activity in churning the soil. Soil composition and soil properties markedly influence all aspects of the abiotic system, as well as affecting, to some extent, the presence of particular vegetative species.

Fluvial Woodland. Four groups of primary producers are distinguished by ecological role in the fluvial woodlands north and east of Jones Creek. The primary producers are dominated in biomass and in the importance of ecological role by water-tolerant hardwood trees and by shrub or brush. Perennial herbs and grasses and hardwood seedlings account for a small portion of the primary producers. The species composition of the hardwoods is described in Chapter II-B-4.

The primary producers provide both forage and habitat cover for the successive levels of consumers. The primary consumers include insects, granivorous song and game birds, small mammals, and deer in low relative density (one per hundred acres). Some granivorous songbirds are insectivores in the summer months. Other secondary consumers include predaceous beetles, owls and vultures, and bobcats (Seadock, 1974).

The distribution and abundance of organisms is controlled by limiting factors. Important limiting factors in the fluvial woodland are soil mixture, nutrients, soil heat, soil oxygen, and soil salt content. Brazos River flooding is a major source of "new" water, nutrients, and sediments to the fluvial woodlands of the study area.

Flows between system components include the uptake of soil water, oxygen and nutrients by the producers and the transfer of energy from the producers to consumers in the food web. Soil oxygen, soil heat, and soil salt content affect the presence and success of the producers. The flows out of the fluvial woodland ecological system include energy loss to the abiotic system through detritus and surface water outflow. Producers account for most of the detritus as plant debris. Fecal material, regurgitation, and dead animal bodies add only a slight amount to the net detrital biomass.

Surface water outflow is through the drainage of the Jones Creek watershed. There is little sheet-water runoff of rainwater because of the baffling action of shrubs and grasses. Most of the sheet-water outflow occurs south of Highway 36, where "fingers" of the woodland extend into the prairie grassland along low relief ridges.

There are various biologic limiting factors which, along with the physical/chemical limiting factors, affect the distribution and abundance of fluvial woodland organisms. The greater ability of the mature hardwoods to obtain water from the soil regulates the availability of soil moisture to hardwood seedlings and perennials. This competition for water is one of the most important biotic regulating factors maintaining the community structure of the fluvial woodlands. The hardwood tree canopy, by shading the lower shrub layer, regulates the amount of sunlight penetrating to the forest floor, thereby controlling soil heat, light for photosynthesis, and local atmospheric conditions within the growth stands.

The woodland is currently being modified by human practices. The most direct effect is clearing around the periphery of the woods north of Jones Creek, which reduces the areal extent but does not alter community structure or function. In the margins of the woodlands, with less dense vegetative cover, cattle grazing markedly changes basal cover. Most of the cattle grazing takes place on the prairie grasslands or at transitional areas between grassland and woodland. Little grazing occurs in the woodland itself because of the dense understory growth and lack of palatable forage.

Prairie Grassland. Two major subsystems were recognized as part of the coastal prairie or prairie grassland in Chapter II-B-4: Gulf cordgrass prairie and shrub-savannah. Each of these sybsystems function similarly and have a similar species composition. The subsystems differ mainly in the dominance of brush or shrub versus perennial grasses, notably cordgrass. The basis for the difference is believed to be a response to grazing pressure (Allen, 1960) and in part to elevation-releated substrate wetness and salinity (Johnston, 1955). One ecosystem diagram suffices to describe the dynamics of either system. The appropriate dominant producer group is noted in considering either particular subsystem.

The prairie grassland is a distinctly terrestrial ecological system in the area around the inland canal/industrial site corridor, bordering on brackish water marsh at a three foot elevation (m.s.l.) and extending inland to the fluvial woodland between 8 and 15 feet (m.s.l.). The community structure and species composition differ from that of the woodlands, but the ecological roles of the various components are similar.

The primary producers include brush or shrub and perennial grasses (either may be dominant depending on the subsystem), perennial herbs, a small proportion of hardwoods (dwarf live oak), and hardwood seedlings. The brush and grasses provide forage and cover for consumer groups. Hawks perch on the shrub of the upper shrub-savannah subsystem.

Primary consumers include diverse insects, granivorous game and song birds, and small mammals. The species composition of these groups is presented in Chapter II-B-4. Large wintering populations of several geese species forage in the cordgrass prairie as well as in the brackish marsh. The geese preferentially feed on plant roots and legumes. Large cattle herds graze throughout the coastal prairie. This land use practice markedly disrupts the existing natural balance of the coastal grassland, changing and adding components such as cattle egrets and cow-pie insects.

Secondary consumers in the coastal grassland include predatory insects, insectivorous birds, and omnivorous small mammals. Hawks living in the coastal grassland also hunt over the brackish marsh. The coyote is the prairie couterpart of the fluvial woodland's bobcat.

The limiting factors of prairie grassland producers include the same components as in the fluvial woodland, with the additional factor of plant surface salts from salt spray, which restrict the

distribution of perennial herbs and annual weeds to species adjusted to higher salinity levels. The system is subject to periodic storm surge flooding which increases soil salinity, but is rarely influenced by normal tidal action.

Surface sheetwater inflow to the coastal grassland is restricted by Highway 36. This barrier to flow causes minor floods north of the community of Jones Creek following heavy rains. North of Highway 36, the topographic relationship of the savannah-shrub and fluvial woodland is such that surface runoff tends to flow from the grasslands into the woodlands. Surface runoff of rainwater out of the grassland ecosystem south of Highway 36 is regulated by the baffling action of brush and grasses. Grassland runoff consists of both sheetflow into the upper marsh and inflow into drainage channels such as Redfish Bayou and Jones Creek. The sheetflow is significant in contributing to the salinity gradient across the brackish marsh.

Fire is one of the most important regulating factors of the prairie grassland. Fire is both a common natural agent and a land management tool, as described in Chapter II-B-4. Surface fire is used before the growing season to burn off accumulated grass litter, increasing soil fertility, thus encouraging new shoot growth which is more palatable to cattle. The effectiveness of fire as a management tool decreases with overgrazing. Overgrazing tends to reduce the density of groundcover which is necessary for carrying a fire and thereby encourages the invasion of brush and unpalatable invader species. Once a dense stand of brush is established, surface fire is less successful in penetrating the stand and in killing off the brush. Fire also affects consumer groups by burning nests, destroying vital habitat, removing insect food sources, and by temporarily removing forage. The timing and extent of burning is, of course, important in determining the influence of fire. It is likely that most of the prairie grassland south of Highway 36 has been burned at some recent time. Burning usually occurs at least once in three years in the project area.

Competition for water is also an important regulating factor. Perennial grasses may successfully compete with invading annuals and woody seedlings for available soil moisture. Grasses and shrubs both affect soil heat and evapotranspiration rate.

Brackish-Water Marsh. This ecological description specifically addresses the tidally influenced, brackish-water marsh occurring between the low ridge west of Jones Creek and the San Bernard River. The major share of this description is also applicable to the marsh which flanks Jones Creek, with modifications pertaining to differences in upland freshwater inflows and tidal action. The western marsh is emphasized in this description as it is likely to sustain more and greater impacts from inland canal/industrial site activities.

Water flow is clearly one of the important driving forces behind the productivity of the brackish-water marsh. The marsh receives fresh water sheetflow runoff from the upland coastal grasslands as well as channelized flow through Redfish Bayou. The lower reach of Redfish Bayou is also important in channeling salt water into the marsh. Some tidal exchange takes place between the GIWW and the lower marsh, however the spatial influence of this flow is less than that of Redfish Bayou. McNeal and Pelican Lakes act as staging areas for tidal flow in the lower marsh. As large water bodies, they retard tidal influence farther upstream in McNeal Bayou. The diurnal tidal range in the area is low, probably between 1.2 and 1.8 feet. In the spring, upland drainage masks the influence of tidal inundation.

Part of the surface water which enters the marsh, either from upland or tidal sources, percolates into the soil as macropore and micropore water, and may be taken up by marsh grasses. Saturated pore spaces restrict the volume of soil air present and may thereby restrict available oxygen to plant roots. Water inflow to the marsh may also contribute to standing water. Standing water is a habitat for phytoplankton, aquatic insects, fish, alligators, waterfowl, and wading birds. Such standing water may exist either as permanent channels or ponds, or as a sheet-veneer over the flat marsh surface (such as in the upper marsh and between the water courses in the middle and lower sections of the marsh). The duration and average depth of submergence differentially affects

plant species and phytoplankton standing crop, as previously mentioned. The frequency of the emergency-submergence cycle affects (1) gaseous exchange between plants, soils and the atmosphere, and (2) the rate of decomposition of the *Distichlis* rough mat (and of other plant detritus) to an available nutrient form.

The inflow of water to the marsh is the major source of dissolved nutrients and sediments. Much of the sediment is fine clay with adsorbed organic and mineral nutrients. The suspended sediment may have a negative effect on the marsh system by decreasing available sunlight to primary producers. It should be noted here that periodic storms with high tides are more significant in contributing relict salts to the soil throughout the marsh than is normal tidal action.

A final importance of tidal action is in flushing or removing detritus from the marsh. In a typical salt water marsh, an estimated 45 percent of production is removed by the ebb tide before it is utilized by marsh consumers (Teal, 1962). As tidal flow in this brackish-water marsh is generally limited to few channels feeding the San Bernard River, it is likely that detritus accumulates for longer periods of time than in other tidal marshes with more direct Gulf exchange.

The major primary producers in this brackish-water marsh include water-tolerant perennial grasses, annual sedges, and phytoplankton in areas of standing water. *Distichlis spicata,* a perennial grass, is the dominant producer. *Scirpus olneyi*, an annual sedge, is common (Seadock, 1974). In other areas *Spartina patens* replaces *D. Spicata* as the dominant. Competition between *Distichlis* and *Scirpus* is regulated by soil salinity and hydroperiod. The latter regulates gaseous exchange via soil aeration and submergence/emergence cycles. *Distichlis* has a wider range of salt tolerance than does *Scirpus* (Palmisano, 1967; Penfound and Hathaway, 1938). Both species prefer fresh to brackish water (Babcock, 1967; Rossa and Chabreck, 1972; Penfound and Hathaway, 1938). *Scirpus* apparently has a greater ability to either receive or store oxygen under submergent conditions, thereby having a competitive advantage during high-stress flooding conditions. Finally, stands of *Distichlis* accumulate a "rough mat" composed of dead, recumbent leaves which trap and bind sediment and detritus. The rough mat inhibits *Scirpus* invasion into *Distichlis* stands and gradually raises marsh elevation, decreasing the influence of flooding and substrate wetness. The *Distichlis*-rough mat feature is apparently a self-perpetuating mechanism contributing to long-term *Distichlis* dominance in this brackish-water marsh (Blum, 1968).

Phytoplankton is seasonally abundant in standing water bodies such as McNeal and Pelican Lakes, McNeal and Redfish Bayous, and in the numerous small and shallow marsh ponds. Phytoplankton productivity is regulated by water temperature, available nutrients, and by the incident light energy. The latter is affected by water depth and suspended sediments.

The marsh grasses provide both food and cover to various consumer groups. Primary consumer groups feeding on the grasses include insects, small mammals, furbearers, and waterfowl (see Chapter II-B-4 for a more detailed species identification). Geese and ducks are of special importance because of their high population level in the winter. The geese preferentially eat the rhizomes of the sedges. Their activities can result in "eat-outs" of the *Scirpus* stands (Lynch, O'Neil, and Fay, 1947). Furbearers, principally nutria and muskrats also prefer *Scirpus* rhizomes and may also produce eat-outs.

Juvenile fish and aquatic invertebrates feed primarily on phytoplankton and detritus. The former two groups can be limited by dissolved oxygen levels. Dissolved oxygen levels are decreased by increasing water heat, water salinity, and concentration of oxidizable material. Redfish and McNeal Bayous and Pelican and McNeal Lakes support an important spawning and nursery population of shrimp and finfish, and essentially represent an estuarine habitat within the brackish-water marsh.

Secondary consumers, such as wading and shorebirds, feed on fish, aquatic invertebrates, and insects; adult fish prey on other fish (including their young) as well as aquatic invertebrates.

Raptors and mammals prey on furbearers, small mammals, insects, and birds. An important top-carnivore in this brackish-water marsh as in most upper Texas coastal marshes, is the alligator, which primarily feeds on aquatic animals (invertebrates and fish).

In summary, the vegetation of the brackish-water marsh supports a more diverse food web than do the other vegetative communities in the project area. Migratory birds, endangered species, and Gulf fisheries rely in part on this productive coastal area, and contribute to its overall human use value.

Ecological Attribute Alterations

Procedure of Analysis. The preceding descriptive analysis of the components, flows, and regulating factors in each ecological system is the basis for ecological systems diagrams. The diagrams are visualizations of the ecological dynamics of each system, expressed in energy circuit language. Energy is essentially the common connecting link between system components (see, for example, Odum, 1967, 1971, 1972 a,b). The diagrammatic visualization of the ecological systems is not intended to be inclusive of all detail, subtleties, or complexities of any of the systems. It is used with the previously described primary ecological alterations (PEA) in systematically analyzing changes in ecological attributes resulting from project activities.

The primary ecological alterations previously presented are the first analytical record of change. The PEA indicates a direct effect in the ecosystem either on storages of material (soil salt, nutrients, standing water), transformers (various primary producers and consumers), or on pathway regulators (ground cover, shading, pH, flowing water). A change in one of these first levels may cause secondary attribute alterations, depending on the magnitude and duration of the initial perturbation. These secondary alterations may be systematically identified by checking, on the respective system diagram, altered energy/material pathways and altered energy/material transformers or storages. Tertiary alterations may be similarly identified.

The direction of change in the transformers, storages, and pathway regulators may be depicted either as an increase or decrease (other dimensions of alteration must be verbally noted). In addition, some estimate of durations of change, either long- or short-term, may be indicated. Finally, a range of potential alterations distinguishes between probably and possible impacts.

The ecological attribute alterations of the project activities are presented in Appendix E. The lists are indexed by ecosystem area, activity, and PEA. The direction, likelihood, and duration of attribute alterations are indicated. Comments provide clarifying points as well as indicating inter-ecosystem effects.

Summary of Phase 1 Ecological Attribute Alterations. The list of ecological attribute alterations presented in Appendix E details the ecological ramifications of the Phase 1 inland canal project activities. The major ecological impacts which would be expected are summarized in this section. The summarization takes three factors into consideration. First, some activities' impacts can be recognized as being short-term in duration and small in magnitude and importance. Second, some activities' impacts may be masked or rendered insignificant by the impacts of subsequent activities. Third, many of the impacts of activities occurring late in the sequence of site preparation actually occur within an already modified environment, and under controlled conditions, as in the industrial site area. With these considerations, the summary excludes some impacts from further analysis, and aggregates others into a comprehensive impact issue.

The major Phase 1 ecological impacts may be summarized as follows: (1) about 30 percent of the fluvial woodland habitat between the Brazos and San Bernard Rivers in the study area, and about 22 percent of the prairie grassland habitat in the same area, would be lost to industrial development; (2) the north site would act as a barrier to migration, thereby isolating remaining woodland habitat (especially under Phase 4 development); (3) the canal would act as a barrier to

migration of ground animals between the Jones Creek and Redfish Bayou marshes; (4) the various earthwork activities expose unstabilized substrates, thereby possibly increasing surface water runoff and erosion; (5) transported sediments would have a detrimental effect on marsh plant growth; (6) the diversion of Redfish Bayou at the channel crossing would probably alter downstream flow conditions, with concomitant changes in the Bayou course and in the relative influence of tidal and fresh water inflow to the marsh; and (7) sheetwater flow from prairie grassland to the upper marsh would to a large extent be converted to point source flow from retention pond water release, resulting in altered wetness patterns through the upper McNeal-Redfish Bayou marsh and in species distribution patterns.

Fluvial Woodlands. As a result of Phase 1 project activities, approximately 1820 acres of fluvial woodland would be cleared for permanent conversion to industrial development (see Figure 49). This decrease in extent of the fluvial woodlands represents 30 percent of such ecological areas south of the Brazos River and east of Clemens State Farm. Almost 50 percent of the largest, single contiguous tract of woodlands in the area would be destroyed. The remainder of the tract, comprising more than 1400 acres of fluvial woodland, would be similarly cleared under Phase 4, long-term future development. This reduction in irreplaceable ecological habitat accentuates similar loss through development north of the Brazos River, west of the community of Lake Jackson.

In addition to significant and direct woodland habitat loss, the project indirectly affects the wooded areas to the southeast by increasing the isolation of that fluvial woodland habitat from similar habitats located upstream. This increased isolation is not so important as the direct woodland habitat loss, however, because the Clemens State Farm already greatly severs migration within the woodland along the course of the Brazos River.

It is probable that the small population of deer presently residing in the area's woodlands would be eliminated by direct habitat loss. The remaining isolated wooded tracts south of the Brazos would probably not be sufficient for continual support of the deer. Those wooded areas are currently under pressure by residential development. Any population of bobcats which have been observed in the area (Seadock, 1974) would also probably be eliminated. The habitat range of various raptors would also be decreased. The raptors may gradually vacate the area in preference of more rewarding wooded areas.

More subtle ecological impacts may occur in the short-term in preparing the north site. Tree and ground vegetative cover removal would allow greater rates and volumes of rainfall runoff with concomitant erosion and transport of sediment exposed by the project's activities. This impact's duration would probably be less than a year, as measured from the time of grubbing and topsoil stripping to the time that northsite flood protection levees are successfully stabilized by vegetation. The increased flow and sediment transport would enter the upper watershed of Jones Creek. The capacity of Jones Creek to handle peak runoff following storms may be exceeded. Excessive sedimentation in the channel may occur, especially where flow is restricted under the Highway 36 diversion. The tendency of Jones Creek to flood north of Highway 36 could be exacerbated.

Another environmental alteration at the north site results from the presence of the flood protection levee. By preventing Brazos River flooding from dissipating within the area to be occupied by the north industrial site, flood stage flow to the east and south of the site, along the course of Jones Creek, would be accentuated. Greater flooding depths and duration in the remaining woodlands may alter woodland community composition in the long-term. The frequency of such flooding, of course, would not be changed. The height of river flooding in the community of Jones Creek may be increased.

Prairie Grassland. As a result of Phase 1 project activities, approximately 5470 acres of prairie grassland would be cleared for permanent conversion to industrial development. This ecological system loss includes some 1730 acres of shrub-savannah at the north site and 3560 acres of cordgrass prairie at the south site. In addition, about 180 acres of grassland will be lost to the

channel and its right-of-way. More than 310 acres will be altered in the long-term by the higher elevation of dredge spoil disposal areas.

The prairie grassland loss to the south industrial site represents approximately 22 percent of comparable habitat between the Brazos River and San Bernard River. Perhaps the most significant impact of this habitat loss is the reduction of feeding area for wintering populations of geese. If the same wintering goose population size is attracted to this area, denser feeding patterns would likely result in rapid depletion of the food supply. The residence time of the wintering population south of Jones Creek would decrease. The decrease in available habitat and food resources in the area would probably result in increased demand on the neighboring San Bernard and Brazoria National Wildlife Refuges.

The wintering population of sandhill cranes on Jones Creek Ridge would be adversely affected by the presence of the inland canal. Most of the ridge habitat lies contiguously east of the channel route. However, the three leveed spoil disposal areas at 10 feet above grade could displace the population as birds prefer to be secluded when feeding rather than exposed in prominent relief.

The presence of the canal would be an effective barrier to migration across the prairie grassland vegetated ridge separating the Jones Creek and Redfish-McNeal brackish marshes. The barrier would affect furbearers, other rodents, and also the alligator. To the extent that such migration is essential to the feeding patterns of these species' populations, the impact of the canal would be significant.

The dredging of the canal through the prairie grasslands would result in channel water turbidity. Additional sources of suspended sediments in the channel include water outflow from the spoil containment areas and from the south industrial site prior to site stabilization and clean-up. These suspended sediments would be transported to the GIWW. The probable short-term increase in turbidity in the GIWW could decrease photosynthesis of grasses and phytoplankton. It should be noted that turbidity in the GIWW is quite variable and depends largely on wind strength and duration (a seasonal function). The GIWW is seldom clear of turbidity. In the long-term (2 to 3 years) the increase in sedimentation from canal construction would probably stimulate plant growth by having increased the supply of nutrients.

The presence of the canal in the upland prairie grassland would allow some extent of saline water intrusion into the substrate below the prairie grassland. The salinity of the canal water would seasonally vary from 2 to 25 ppt. The water in the zone of saturation below the prairie grassland varies spatially from approximately 0.8 to 2.8 ppt. It is possible that soil water in the vicinity of the canal would increase. However, there may not be an important effect on the salt-tolerant cordgrass assemblages of the prairie grassland. The extent of the impact of saline water intrusion will depend upon the distribution and thickness of clay to silty clay substrates and the ability to maintain freshwater percolation from surface drainage.

As at the north industrial site, the removal of ground cover during the south site preparation activities would allow increased runoff and concomitant erosion and transport of sediments. The duration of this impact would probably be less than one year. The extent of impact would probably be small due to the negligible slope to the land surface. The direction of flow would be to the southeast toward the upper part of the brackish-water marsh. It is likely that most of the eroded sediment would be stopped in the remaining strip of prairie grassland between the south site and the brackish water marsh. Depending upon the season in which the preparatory activities take place, a significant increase in fresh water sheetflow into the marsh could occur.

There are, however, more severe, long-term results of drainage alteration in the prairie grassland. First, flow patterns in Redfish Bayou would be altered. The uppermost mile of Redfish Bayou would be removed as it lies within the north tract of the south site. A runoff retention pond would collect rainfall falling in the upper area of the watershed. This stored runoff would be

released under a monitoring program to assure water quality and to deliver water to Redfish Bayou in simulation of natural flow. This controlled release would probably increase the channelization of Redfish Bayou above the marsh, where it is now only an intermittent stream. There may be a concomitant long-term decrease in soil moisture in the remaining watershed of Redfish Bayou between the harbor entrance and the community of Jones Creek. Second, Redfish Bayou would be ponded on the north side of the channel crossing. The vegetation of the ponded area would be altered from that of a prairie grassland to aquatic vegetation. Although the sump pump would be designed to pull the suspended sediments through the diversion pipe, there would be a net decrease in sediments and associated nutrients reaching the marsh.

Finally, sheet water flow from the prairie grassland toward the upper marsh and McNeal Bayou would be replaced by point-source discharge from the runoff retention ponds along the southern border of the industrial site. While various methods may be used to distribute flow out of the ponds, the net result would be that some sections of upper marsh would receive more water inflow than normal, and other sections would receive less than normal amounts. The retention ponds would also trap sediments. There would be a net decrease in sediments and nutrients reaching the marsh.

Brackish-Water Marsh. The McNeal-Redfish marsh would be affected both directly by activities occurring at the periphery of the marsh and indirectly by altered patterns of upland drainage from the prairie grassland. Direct alterations include decreasing tidal flux by diking the south entrance channel and locally increasing sedimentation of the marsh periphery. Indirect, inter-ecosystem alterations include changing hydrologic conditions in Redfish Bayou and in replacing sheet-water inflow by point-source inflow.

The south entrance channel dike would decrease direct saline water exchange between the GIWW and the lower reach of the marsh. The only effective remaining course of tidal flux would be through Redfish Bayou, via the San Bernard River. The tidal flux through Redfish Bayou is presently the more important source of salt water to the marsh.

Sediment and associated nutrients would locally affect the periphery of the marsh due to increased rate of inflow associated with greater relief features. The Jones Creek marsh could be affected by runoff from the slopes of spoil containment areas 2 and 3 on the Jones Creek ridge. Brackish-water marsh south of the GIWW could be affected similarly by runoff from the slopes of spoil containment area number 1. Runoff from the slopes of canal dikes located at the south channel entrance, between stations 50+00 and 100+00 along the west side of the canal, and at the Redfish Bayou diversion could also carry sediments into the periphery of the marsh. The magnitude of this impact would decrease after the slopes are vegetatively stabilized. Increases in local turbidity (suspended sediments) could interfere with photosynthesis and with filter feeding of invertebrate consumers. The overall magnitude and importance of this impact would probably be slight and short-term.

The discharge of water at the Redfish Bayou diversion at the inland canal crossing would vary with rainfall in the watershed. The pump would continuously operate only when there is sufficient waters collected in the diversion pond. The flow velocity of the discharged water would probably be at a higher velocity than current flow rates. To more efficiently handle this changed flow condition, it is probable that the proximate downstream course of Redfish Bayou would move into a straighter alignment (Figure 55). There is already a branch of Redfish Bayou developed at this alignment. There would be a short-term increase of sediments transported to the lower reach from the scouring of the new channel. With the increased flow, it is also probable that the pulsed water release will move more rapidly down Redfish Bayou into the lower reach of the marsh, as opposed to a gradually seaward flow in which materials are exchanged with the surrounding upper and middle marsh. There would therefore be a relative decrease in salinity in the lower course, with a possible long-term effect on the estuarine fish and invertebrate residents as well as on marine species seasonally spawning and nursing.

Finally, the alteration of upland drainage sheetflow to point-source flow from the south site area would have a probably, indirect, long-term effect on upper marsh substrate wetness. Channelized flow would tend to increase, especially in the northwestern portion of the marsh (Figure 55). Substrate wetness would tend to decrease in between such flow routes. Detritus and rough mat would probably accumulate for longer periods, thereby gradually increasing local relief. *Distichlis* would, in those drier areas, gain clear dominance over *Scirpus*. It is possible that this community composition change would further the likelihood of eat-outs. Over many years, it is conceivable that certain upper marsh areas may dry out sufficiently to allow upland species to invade.

Other Environmental Impacts

There would be environmental impacts other than those which may be discussed in an ecological context. During Phase 1 site preparation there may be short-term, small magnitude, air quality impacts from construction equipment and vehicle exhaust. However, this pollution would be of minimal importance because of the dispersed, non-point nature of the loadings, loadings magnitude and duration, and because of the good air mixing and dispersion characteristics of the area.

The construction activities would also generate noise. However, it is probable that only activities taking place close to the community of Jones Creek would be heard. Noise perception by wildlife varies in importance and is markedly influenced by background noise to which wildlife may be accustomed. It is expected that noise impacts would be less important than the ongoing habitat disruption involved in Phase 1 site preparation.

The industrial site may pose a visual impact in the short-term while the area is barren and before flood protection levees and buffer zones are vegetated. This visual impact, however socially important, would be manifest only around the communities of Jones Creek and Perry Landing.

Altered land use patterns would probably be a more important general environmental impact than those previously cited. Approximately 6000 acres will be changed from agricultural (grazing) to industrial use. The pattern of developed residential and industrial land uses will be altered under subsequent project phases. This further alteration is addressed in Chapter IV-B, Impacts of Industrial Site Development and Operation.

There would be impacts on archeological and historical resources. The north entrance channel is located near a prehistoric shell midden. West of Perry Landing, in the access corridor between the north and south sites, are two concentrations of Anglo-American structures with cisterns, recorded by the Texas Archeological Survey. In the course of excavation and dredging it is possible that more archeological sites, especially of middens, would be found. The two known archeological sites may be removed or be relocated, or would require *in situ* protection. It is assumed that appropriate Texas Historical Commission and Texas Archeological Survey officials would be notified if further sites were found, and that those sites would be analyzed prior to collection and removal. Historic sites include the Gulf Prairie Cemetery and Peach Point Plantation along Perry Landing Lane south of Highway 36. It is likely that the pipeline corridor connecting the north and south sites along this alignment would avoid disruption of these two historic sites.

It is reasonable to assume that many impacts related to utility plant construction (raw water and waste treatment facility) during Phase 2 would generally not be important because they would occur within the already modified industrial site environment and because the previous Phase 1 preparation of the site would have established environmental controls on site water runoff, which would otherwise be a major agent of construction-related impacts. A low level of air pollutant loadings would result from equipment exhaust. The effect of construction noise would be small and isolated by the presence of the flood protection levee and buffer zone between the north site location of construction and the community of Jones Creek.

The remaining sources of impact during Phase 2 include groundwater well field development

and pipeline construction. One possible groundwater well field development area lies north of a line formed by Harris Reservoir, Danbury, and Liverpool. Two to five wells constructed in that area with 500-foot to 1100-foot depth would probably supply at lease the minimum 9 mgd as part of the raw water supply. There are currently more than 60 public supply, industrial, and irrigation wells spread over more than 370 square miles in that area. It is reasonable to assume that the small amount of well drilling would not result in any important environmental impacts in the upland prairie grasslands located in northern Brazoria County.

There would be approximately 30 miles of water main to the inland canal industrial site from the groundwater well field, 5 miles of raw water main from the Brazos River at a point just north of Brazoria, and a maximum of about 18 miles of cooling water discharge pipeline from the site to the Brazos River near the Highway 36 bridge. These pipelines would cross through upland prairie grasslands and fluvial woodlands. The groundwater well field would cross as many as seven irrigation and drainage ditches, Oyster Creek, and the Brazos River. The raw water main from the Brazos River would cross a highway and railroad between Brazoria and the Brazos River and would pass through Clemens State Prison Farm. The cooling water discharge pipeline would cross Jones Creek above Highway 36, another small drainage course feeding a freshwater marsh east of the community of Gulf Park, Brazos River Road, and four small residential roads north off from Highway 36 between Jones Creek and the Brazos River.

The potential impacts of pipeline installation would involve little short-term disruption of the various ecological systems as the amount of digging at any one place is small in areal extent and the excavation pipeline trench is rapidly covered over and revegetated. A small amount of erosion may occur, and would probably be unimportant in the upland ecosystems. Crossings of small irrigation and drainage ditches would probably be above grade and have little influence on the water course. The groundwater supply main's crossing of Oyster Creek and the Brazos River would probably be buried in the bed of those water courses. Various methods are well established for such major water course crossings. The impacts on channel hydrology and water quality would mainly be short-term increases of turbidity downstream from the crossing.

Impact Evaluation

Parameters. There are various parameters which may be used to test and monitor the significance of Phase 1 site preparation impacts. These parameters represent the sustaining properties of the ecological systems. Temporal influences and baseline characteristics must be established over a period of time before parameter observation for determing impact would be useful. This section presents a brief list, by resource area, of those parameters which may be of greatest interest in recording environmental change. The list is drawn from the preceding discussion of ecological alterations, and includes those parameters which may effectively verify or refute the cited potential ecological impacts.

Fluvial Woodland parameters include a biocensus of game and other small mammal and bird populations; and Jones Creek water pH, turbidity, flow rate, particulate matter, and alkalinity, particularly in that stretch north of Highway 36.

Prairie Grassland parameters include various carrying capacity measures such as amount of preferred food resources, furbearer population size trends, and wintering goose population size; water quality in the Redfish Bayou diversion point north of the inland channel (salinity, pH, particulate matter, turbidity, temperature, alkalinity, oxygen demanding material, nutrient levels, ionic balance, and toxic materials); water economy of the upper Redfish Bayou watershed (rainfall, runoff, soil infiltration, stream inflow, and evaporation by mapped unit areas); and soil moisture in a transect paralleling the southern boundary of the south site. It is assumed that retention pond water quality will be monitored as part of the project.

Brackish Water Marsh parameters include Redfish Bayou channel geometry, substrate texture, rate and volume of flow, and salinity; a seasonal biocensus of Redfish Bayou and of marsh benthos; marsh salinity, north of the south entrance channel dike; particulate matter in water flowing from the channel and off dikes into the marsh; upper marsh wetness transects; biocensus of *Distichlis* and *Scirpus* stands; and microtopographic mapping in the upper marsh.

Adjustments. Activity adjustments are locational, design, or temporal activity alternatives which can be employed to lessen adverse impacts. They are aimed at avoiding the ecological attribute alterations with undesirable environmental consequences which are important in their own right as well as to economic and human use values. It hould not be assumed that the adjustments can completely remove impacts; rather they are minimizations. Furthermore, it should be observed that the best possible adjustment may likely be very costly. Its justification varies with the importance of the impact which it would lessen.

Stabilization of high relief features, such as levees, should occur as soon as the features are completed. This rapid stabilization would reduce the short-term impact of increased sediment transport, which is particularly important near the marsh at channel levees and spoil containment levees.

Scheduling of the project such that channel excavation and dredging occurs after wintering bird populations have left the area would allow the revegetation of the route before the next season, thereby reducing direct and indirect biologic impacts.

Various methods may be employed to distribute water outflow from site runoff retention ponds in approaching natural sheetwater flow toward the marsh. As much as 10,000 feet of distributing pipe (e.g., clay-tile pipe) in a dendritic pattern would be necessary to be effective.

Regulation of discharge velocity in Redfish Bayou to more closely simulate natural flow rates would minimize changes (1) in Bayou alignment and (2) in the influence of more fresh water reaching the lower reaches of the Bayou.

Marsh vegetation management could regulate the proportion of *Distichlis* and *Scirpus*, selectively increasing the more palatable *Scirpus*. The enhanced food resource of the marsh might offset the habitat loss to wintering geese due to south site development. However, the impacts of the management procedures on the ecological balance of the marsh could be important in themselves.

Finally, an extension of the north and south site flood protection levees around the eastern site of the community of Jones Creek would alleviate Brazos River flooding caused by the north side levee. This adjustment would also have the positive effect of protecting Jones Creek from hurricane surge flooding.

Environmental Impact Analysis References

Allen, P. F. 1950. "Ecological Basis for Land Use Planning in Gulf Coast Marshlands." *Journal Soil and Water Conservation.* Vol. 5, pp. 57-62.

Babcock, K. M. 1967. The influence of Water Depth and Salinity on Wiregrass and Saltmarsh Grass. Master's dissertation. Louisiana State University and Agricultural and Mechanical College.

Blum, J. T. 1968. "Salt Marsh *Spartina* and Associated Algae." *Ecol. Monograph.* Vol. 38, pp. 199-222.

Buckmann, H. O. and N. C. Brady. 1969. *The Nature and Properties of Soil.* Seventh Edition. New York: MacMillan Co.

Dee, N., et al. 1973. *Planning Methodology for Water Quality Management Environmental Evaluation System.* Columbus, Ohio: Battelle, Columbus Laboratories.

Dickert, T. G., editor with K. R. Domeny. 1974. *Environmental Impact and Assessment: Guidelines and Commentary.* University Extension, University of California at Berkeley.

Johnston, M. C. 1955. Vegetation of the Aeolian Plain and Associated Coastal Features of Southern Texas. University of Texas doctoral dissertation. Austin, Texas.

Leopold, L. F. E. Clark, B. B. Hanshaw, and J. R. Bolsley. 1971. *Procedure for Evaluating Environmental Impact.* Geological Survey Circular 645. U.S. Department of the Interior.

Lynch, J. J., T. O'Neil, and D. W. Fay. 1947. "Management Significance of Damage by Geese and Muskrats to Gulf Coast Marshes." *Journal Wildlife Management.* 11(1), pp. 50-76.

Moore, J. L., et al. 1973. *Final Report on a Methodology for Evaluating Manufacturing Environmental Impact Statements for Delaware's Coastal Zone.* Columbus, Ohio: Battelle, Columbus Laboratories.

Odum, H. T. 1967. "Biological Circuits and the Marine Systems of Texas." *Pollution and Marine Ecology,* T. A. Olson and F. J. Burgess (eds.), pp. 99-157. New York: Interscience Publishers.

———. 1971. *Environment, Power and Society.* New York: John Wiley and Sons, Inc.

———. 1972a. "An Energy Circuit Language for Ecological and Social Systems: Its Physical Basis." *Systems Analysis and Simulation in Ecology,* ed. B. C. Patten, V. 2, pp. 140-211. New York: Academic Press.

———. 1972b. "Use of Energy Diagrams for Environmental Impact Statements." *Tools for Coastal Zone Management.* pp. 197-213. Washington, D.C.: Marine Technology Society.

Palmisano, A. W., Jr. 1967. Ecology of *Scirpus olneyi* and *Scirpus robustus* in Louisiana Coastal Marshes." Master's dissertation. Louisiana State University and Agricultural and Mechanical College.

Penfound, W. T. and E. S. Hathaway. 1938. "Plant Communities in the Marshlands of Southeastern Louisiana." *Ecological Monographs* 8(1) pp. 1-56.

Rice Center for Community Design and Research. 1974. *Environmental Analysis for Development Planning, Chambers County, Texas.* Technical Report, Volume One, Appendices, An Approach to Natural Environmental Analysis. Houston: Rice University.

Rice Center of Community Design and Research. 1976. Texas Gulf Coast Program Research Report 1. 3 cols. Houston: Rice University.

Rossa, W. M. and R. H. Chabreck. 1972. "Factors Affecting the Growth and Survival of Natural and Planted Stands of *Scirpus olneyi.*" Proc. 26th Ann. Conference of the Southeast Game & Fish Commission, pp. 178-188.

Seadock, Inc. 1974. *Environmental Report Summary.* Texas Offshore Crude Oil Unloading Facility.

Sorenson, J. C. 1971. *A Framework for Identification and Control of Resource-Degradation and*

Conflict in the Multiple Use of the Coastal Zone. Department of Landscape. Architecture, College of Environmental Design, University of California at Berkeley.

Teal, J. M. 1962. "Energy Flow in the Salt Marsh Ecosystem of Georgia." *Ecology* 43(4) pp. 614-624.

Texas General Land Office. 1976. *Texas Coastal Management Program. Appendices.* Prepared by Research and Planning Consultants, Inc. Austin, Texas.

Social and Infrastructural Impact Analysis

Introduction

This section examines the infrastructural and social impacts which the inland canal project would produce in the surrounding areas. The section is divided into three major parts: infrastructural issues and impacts, specific planning concerns, and social issues and impacts.

Impact assessment research generally separates environmental considerations from economic, social, and infrastructural ones. Ecological, economic, infrastructural, and social systems are part of a larger environmental system. A change in one of the systems may be felt throughout the larger system. While separation of the systems proves useful for analytical pusposes, in reality, these four systems are intricately connected. Each represents only one aspect of the whole, and all combine to determine the impact of a particular project.

Infrastructural Issues and Impacts

The methodology employed to nominate potentially significant infrastructural issues was developed by RPC,Inc., in *Offshore Oil: Its Impact on Texas Communities* (1977). In that study, a list of major candidate issues was developed. They include:

1. Administrative/Financial Capabilities;
2. Housing;
3. Water Demands;
4. Sewage Collection and Treatment;
5. Solid Waste Collection and Disposal;
6. Crime Prevention;
7. Fire Protection;
8. Recreational Facilities;
9. Health Facilities; and
10. Educational Services.

While it is recognized that these represent only a small number of the actual services a community or unit of government may provide, they are the major ones. To expand this list would increase the study requirements without meaningfully increasing the insights into a unit of government's capacity to absorb impact.

A candidate issue is isolated as significant if the demand on an infrastructural service as a result of development could potentially exceed a unit of government's capacity to provide that service. For each candidate issue, one or more indicators is established of a government's capacity to handle that issue. Standard measures are then established. These standard measures are derived from a variety of sources as indicated in Figure 82. The government's current or future capacity to deal with a particular issue is compared with the standard measures for each indicator. A significant

Figure 82

Infrastructural Issues, Indicators, and Standard Measures

Issue	Indicator	Standard Measure	Source of Standard Measure
1. Administrative/ Financial Capabilities	a. Assessed Valuation/ General Obligation Bonds	a. 10/1 Ratio	a. State Law or City Charter
	b. Ratio of Assessment	b. Maximum of 100%	b. State Law
	c. Tax Rate	c. Cities With Less Than 5,000 Population: $1.50 Cities With More Than 5,000 Population: $2.50	c. State Law
2. Housing	a. Vacancy Rate in County for Rental Units/Homes	a. NA*	a. NA*
	b. Construction Rate	b. NA*	b. NA*
3. Water Supply	a. Maximum Daily System Capacity/ Maximum Daily Use	a. NA*	a. NA*
	b. Storage Capacity	b. 100 Gallons Per Person	b. TWQB*
4. Sewage Collection	a. Maximum Daily Capacity/Maximum Daily Use	a. NA*	a. NA*
5. Solid Waste Collection and Disposal	a. Existing Solid Waste Disposal Site Acreage	a. One Acre Per 3,900 Residents	a. TWQB*
6. Crime Prevention	a. Number of Police Officers	a. One Per 800 Residents	a. TCLEOSE*
7. Fire Protection	a. Number of Firefighters	a. One per 1,800 Residents	a. TML*
	b. State Insurance Board Fire Rate	b. $.40 per $100 Valuation	b. State Board of Insurance
8. Recreational Facilities	a. Number of Parks in Immediate Vicinity	a. Metropolitan Areas: .267 parks per 1000 population. Cities: .465 parks per 1000 population. Towns: .511 parks per 1000 population	a. State Averages
	b. Acreage of Parks	b. Metropolitan Areas per 1000 population. Cities: 9.8 acres per 1000 population. Towns: 7.4 acres per 1000 population.	b. State Averages
9. Health Facilities	a. Number of Hospital Beds	a. One Per 225 Residents	a. TDHR*
	b. Number of Physicians	b. One Per 1,500 Residents	b. TDHR*
10. Educational Services	a. Student/Teacher Ratio	a. 16.35/1	a. State Average

*NA = Not Applicable
TWQB = Texas Water Quality Board
TCLEOSE = Texas Commission of Law Enforcement Officer Standards and Education
TML = Texas Municipal League
TDHR = Texas Department of Health Resources

infrastructural issue is identified if a development-generated demand on an infrastructural service (water, sewage, etc.) would potentially exceed the government's capacity to provide that service, as demonstrated by the comparison of the indicators and standard measures. For example, if the government has one hospital bed for every 300 residents, medical facilities is identified as a significant issue, because the state average standard measure is one hospital bed for every 225 residents (see Figure 82). In this example, the introduction of new residents as a result of any development would further tax the government's ability to provide adequate services at the present time.

It should be noted that a number of these issues and the effects of construction of an inland canal have been analyzed with other parts of this study. Figure 83 details the maximum requirements for Phase 1 and Phase 2 of the postulated canal construction. It should be noted that only maximum requirements are presented in Figure 83, because these peak periods should indicate maximum impact. Similarly, it is hypothesized that the maximum impact will occur when new employees move to and become residents of that area.

Figure 83

Population and Employment
as the Result of Canal Construction

	Phase 1	Phase 2
Maximum Direct Employment	142	153
Maximum Indirect Employment	2	142
Maximum Total Employment	17	153
Maximum Resident Employment	43	57
Maximum New Resident Employment	40	48
Maximum Comuter Employment	63	55
Maximum New Population	98	118
Maximum New Students	23	28
Maximum New Population as percent of 1975 county population	0.1%	0.1%
Maximum New Students as percent of total 1976-77 school year enrollment in Brazosport Ind. School District (10,316)	0.2%	0.2%

The maximum population increase as a result of construction of a canal must be viewed in context to the past and present growth rate of the county. Rapid growth in the area began with oil discovery and refinery development in the early decades of this century. The Dow Chemical Company, which is the center of the industrial complex in the area, has been responsible for much of the county's growth since 1940. The rate of growth since 1940 is shown in Figure 84. The 1960-1970 rate of 42.1 percent was far greater than the rate for United States (13.3 percent) and the rate for Texas (16.9 percent) in the same period. The rate was consistent with that of Houston-Galveston region as a whole (35 percent).

The University of Texas, Population Research Center (1973) has projected steady continued growth for Brazoria County in the period 1970-2020. Their projects are summarized in Figure 85.

Given the high growth rate of Brazoria County, it does not seem likely that the 0.1 percent maximum population increase as a result of construction of the canal would have a significant

Figure 84

Brazoria County—Rate of Growth

Period	Population at End of Period	Percent of Population Increase
1940-1950	46,549	71.9%
1950-1960	76,204	63.2%
1960-1970	108,312	42.1%
1970-1975	134,000	23.7%

Figure 85

Projected Population for Brazoria County 1970-2020

Year	Projection	Percent Increase
1980	145,870	34.0
1990	189,138	29.6
2000	238,424	26.0
2010	293,220	22.9
2020	355,244	21.1

Source: Population Research Center, (1973).

infrastructural impact on the area. The governmental units in the area are aware of and planning for a 29.6 percent population increase in the period 1980 through 1990. Thus, the application of the impact assessment methodology fails to nominate significant infrastructural issues.

This does not mean there will be no infrastructural impacts as a result of canal construction, but rather only that the methodology does not delineate any as being significant. In other words, the population increase associated with canal construction should not result in a significant increase of demand for services exceeding the local government's capacities to provide services. While no issues can be nominated as significant due to canal construction, certain issues may demand careful planning in the future. These issues are of particular importance when the possibility for growth due to other projects in the area, for instance Seadock, is considered. While individually no project may significantly impact the infrastructural system, their combined effect may increase the service demands on the local governments in the area.

Specific Planning Concerns

The nine local governments and the officials and residents of the Brazosport area seem very aware of the need for careful, long-range planning. In addition, the nine local governments coordinate their planning efforts and services, which increases their ability to cope with the growth process. While the methodology employed in the previous section did not identify significant infrastructural issues, certain issues which may require particular attention in future planning efforts should be discussed. These include: local tax revenue deficits, housing, educational facilities, medical facilities, transportation, and flood protection. With the exception of local tax revenues, which is reviewed vis-a-vis deficits as a result of canal construction, these issues may require attention regardless of the development of the canal.

Local Tax Revenues. The Economic Impact Analysis (see Chapter IV-A-1), calculates the deficit in local tax revenue as a result of construction to be $29,393 for Phase 1 and $43,415 for Phase 2. These deficits assume that levels of service proportionally increased with population

growth. The amount of deficit should not exceed the financial capabilities of local governments, particularly if the deficit is spread proportionately over the nine community area. Past residential location trends indicate that there is likelihood that this settlement pattern would occur. If services were not increased, their impact on quality of life would be greater than that on fiscal liability.

Housing. The county's vacancy rate of year-round units for sale at the time of the 1970 census was 21.1 percent. The county's vacancy rate of year-round units for rent at the time of the 1970 census was 12.1 percent. However, local officials indicated that there is a shortage of housing in the Brazosport area. Given the short duration of the construction activities, it is likely that construction employees would rent housing, bring their own mobile homes, or commute to the area. Discussions with local individuals also indicated that it was more difficult to buy a house than to rent one, especially since a number of beach houses are available for rent during the fall through the spring. The shortage of housing is stimulating a large amount of newly built apartments and houses. However, the supply will probably not parallel the demand for some time. In addition, the number of mobile homes in the area is growing. The location and utilities of mobile home sites should be carefully considered, as they often lack suitable sewage facilities and effective flood protection.

Educational Facilities. There are eight independent school districts and two junior college districts in Brazoria County. The Brazosport area is served by its own independent school district (Brazoria is in the Columbia-Brazoria District) and Brazosport Junior College. The Brazosport Independent School District has 10 elementary schools, 3 junior high schools, and 2 high schools. Figure 86 details enrollment figures for Brazoria County. Only the Damon ISD has a student/teacher ratio below the state average of 16.35/1 and Brazosport ISD (19.2/1) is slightly above the state average. With the projected growth of the area, the increasing number of students in each ISD could cause some overcrowding and thus, a need for additional teachers.

Figure 86

School Enrollment in Brazosport Area
Independent School District 1975-1976 School Year

School District	Enrollment	Teachers	Student/ Teacher
Brazosport	11,350	590	19.2/1
Columbia-Brazoria	2,779	167	16.6/1

Source: Texas Education Agency, 1977.

Medical Facilities. The Brazosport area is served by a single community hospital with a capacity of 465 beds (1976 data). The Brazosport Telephone Directory lists 34 physicians and 20 dentists. Brazosport medical characteristics are compared to state medical characteristics in Figure 87. Although Brazosport medical capabilities are below the state average in the number of physicians per 1000 residents, it should be noted that Brazosport is very near the extensive health industry of Houston, which provides many specialized medical services. The Gulf Coast Regional Mental Health and Mental Retardation Center, whose main office is in Galveston, operates several mental health programs in the area.

Transportation. There is no extensive public transportation system available in the Brazosport area. Private automobile is the major means of work related transportation in Brazoria County. In 1970, 30,800 workers (78.8 percent of the labor force)used private automobiles and 4279 workers (10.9 percent of labor force) were passengers in private automobiles. In that year, only 44 employees rode a bus, 13 rode a railroad, and 1331 walked to work.

Figure 87

Hospitals and Physicians

	Brazosport Average[1]	State Standard[3]
Number of Hospital Beds per 1000 residents	8.01[2]	4.4
Number of Physicians per 1000 residents	.58	.66

1. Using current population estimate of 58,000.
2. Using surveyed capacity (465).
3. Texas Department of Health Resources.

With the high usage of private automobiles, careful road and traffic planning is important. Two freeways are proposed as part of an inter-community road system. The relocation of Highway 36 from Brazosport to Freeport will involve the construction of a new bridge over the Brazos River south of the present one. This should aid traffic flow between Freeport and Jones Creek. According to the State Department of Highways and Public Transportation (SDHPT), the relocation of this highway has been approved and should be completed in approximately four years.

There is also a proposed extension of FM 2004 which would aid traffic flow between the Clute/Lake Jackson area and Jones Creek. While the right of way was acquired by the county when FM 2004 was constructed, the SDHPT reports that construction of the extension has not been approved and probably will not occur in the foreseeable future.

Although construction of these two roads would help alleviate traffic flow problems, intra-city problems may remain. Given the lack of an extensive public transportation system and the concentration of industries in particular areas, intra-city traffic congestion may increase in the future.

Another potential traffic congestion problem is Highway 288 between Clute and Angleton, which extends on to Houston. This is the main artery connecting Houston and the Brazosport area. Though Highway 288 has been expanded to four lanes and is currently being upgraded between Clute and Angleton, the highway narrows to two lanes outside Brazoria County. With the increasing commuting and truck traffic from Houston to the area, the two lane portions of the highway may prove inadequate.

The Brazosport area has a public airport/airstrip located in Lake Jackson. This airport has no charter service available. The only airline serving the airport is Metro Airlines which has daily flights to Houston. Houston is the nearest commercial airport having scheduled passenger service. A new airport is planned for the area.

Flood Protection. At the present time, the 100 year flood plain of the Brazos River skirts the boundaries of Jones Creek on the north and south sides. In addition, Highway 36 acts like a levee causing Jones Creek to back up and flood eastern Jones Creek during periods of heavy rainfall. A relocation of Highway 36 may allow for better hydrologic connection between the upstream and downstream segments of Jones Creek.

The construction of a levee on the north side of the town as part of the canal project would protect 2500 to 2600 acres of land from future flooding. However, the construction of this levee would divert floodwater east to the Jones Creek watershed. The increase in storm water height brought about by this diversion might result in greater flooding damage in the community of Jones

Creek than has generally occurred. This potential impact might be mitigated by extending the site levee system to protect the town of Jones Creek. Extending the levee system may require the relocation of homes. Thus, while the potential for flooding now exists in Jones Creek, without the mitigating levee system the flooding problems would be increased. The threat of flooding might discourage residential development in the area, especially since it might be difficult to obtain federal flood plain insurance on buildings.

Social Issues and Impacts

The assessment of social impacts associated with a construction project differs in a number of ways from economic, environmental, and infrastructural considerations. Impacts on the latter three systems can be measured quantitatively. For example, the methodology utilized in considering possible infrastructural impacts relied on precise indicators and standard measures. However, developing a concise list of social indicators is a difficult task. As pointed out by Vlachos, et al., "regardless of the evaluative criteria or social indicators used, the public may have a different priority" (1975). Even if a list of social indicators is used, the question of standard measures remains. People living in different areas may have dramatically different perceptions of what constitutes a pleasing social environment. In addition, different groups of people living in the same area may have distinct perceptions of the kinds of impacts which would negatively or positively affect their lives. For example, new residents may view increased development as positive, while long-time residents may see it as a threat to their established lifestyles.

To conduct a specific and comprehensive social impact assessment of a populous area requires a large number of man-hours. The social scientist must interview individuals in the area, determine their ideas and values, and discover the various social groupings in the area. A comprehensive social impact assessment of the construction of the canal would require extensive on-site study in Brazosport and a number of months for analysis of data. Only then could a list of social indicators and measures specific for this area be developed.

The scope of this study allowed for neither the time nor resources to produce a comprehensive social impact assessment. However, it is possible to generally discuss the social issues and impacts of the canal construction based on information about the area and on past issues and experiences gleaned from similar projects. Before discussing this particular project and the social issues and impacts potentially connected with it, it is important to present some perspective on the process of growth and its potential impacts.

Change is a constant process in social and cultural systems. Growth is a relative form of change which also implies increase. Applebaum offers three distinctions that are useful in terms of understanding this view of change: the magnitude of change, the time span of change, and the effects on the changing unit (1970). The magnitude of change refers to the scale of change as reflected in the characteristics, proportion, susceptibility, and degree of alteration of the affected unit; in other words, large-scale as opposed to small-scale change. "The length of the period over which change occurs" is defined as the time span of change. Using Parsons' definitions of process versus structural change (1966), Applebaum's third distinction involves the effect on the changing unit. Some processes serve to maintain a system; other processes result in structural change in a system.

Rapid growth, then, could be defined as large-scale change (relative to the system) which occurs over a short period of time and involves structural changes in a system. Rapid growth generally has different impacts on individuals (Shields, 1975; Wallace, 1970) and on communities (Wolf, 1974) than slower, sustained growth. Boom towns experience a form of rapid growth, but the two are not necessarily synonymous. Economic prosperity of many of the residents of a community is usually implied in the use of the term "boom town."

The list of possible negative impacts of growth on a community expands daily. These range from infrastructural impacts to environmental impacts. Crime, divorce, land prices, and pollution all tend to increase. Community cohesion, control by long-time residents, and available housing all tend to decrease. Carnes and Friesma discuss the possible negative and positive impacts of urbanization on the individual, the family, and the community (1975). Potential positive impacts include an increase in the long-time residents' perception of personal freedom, in the roles available to individuals, in the number of groups, and in the number of local facilities, etc.

In terms of the Brazosport area and this particular study, Applebaum's distinctions are important in analyzing specific impacts. Recalling the projected growth rate of the area without construction of the canal (Figure 85), it becomes evident that magnitude of growth as a result of the canal is very small. Brazosport is a populous, diverse, metropolitan area which has experienced substantial growth for the last thirty years. In fact, it should be noted again that in 1970, 33.9 percent of the county's population had moved into the county since 1960 (U.S. Census). Thus, the residents of Brazosport are used to the introduction of new residents who have diverse lifestyles into the area. In fact, many of them came to the area in the recent years because of its economic development. Their local governments are accustomed to dealing with the problems that result from population increases. Perhaps most important, the attitude of those persons who were interviewed during a visit to the community was overwhelmingly in support of further growth. In Applebaum's terms, future growth seems to be important in maintaining the present system. In this sense, the community is geared to absorb future growth.

The actual social impacts associated with the construction of the canal are few. The specific planning issues identified previously could certainly produce negative impacts on the lives of residents if planning did not occur. However, as noted previously, the majority of these can not be tied directly to the canal but rather would result from the general growth rate of the area. Certainly, however, the canal construction may heighten the potential for problems in terms of these issues.

If local governmental agencies are to extend services to new residents, they may require outside financial assistance. The determination of local fiscal deficits was calculated to delineate maximum impact, as described in the Economic Impact Analysis. As previously noted, the larger cities in the area (such as Freeport and Lake Jackson) may spend substantially less per capita on services. Thus, they may experience significantly lower infrastructural costs and lower deficits. Existing residents may experience relative declines of service levels if their governments cannot afford to proportionately increase services.

New residents would require housing which would further increase the projected housing shortage. The effect on the current residents would probably be to raise housing costs slightly. As the housing shortage increases, residents and local governments should carefully consider the possibility of this shortage producing substandard housing. As noted earlier, many new residents may choose to rent housing or reside in mobile homes. The potential flooding and sewer problems sometimes associated with mobile home developments must be considered.

As stated in the Environmental Impact Analysis the construction of the canal would result in changes in land use. Fluvial woodland habitat as a potential residential development area would markedly be reduced. Agricultural and grazing land would be reduced in extent. The Brazosport region's industrial land use acreage would increase from 1.15 percent to 4.7 percent of the total area and from 30 percent to 64 percent of the developed area. Agricultural land and potentially residential land would be used for industrial development. The result will be a general increase in land prices in the area. This will lead to an increased valuation of residential land and thus, an increase in taxes for land land owners.

Given the small number of new residents associated with the construction of the canal, it is unlikely that residents will experience any significant shortage of medical or educational facilities in the area. Business may experience an increase in the number of clients they serve, particularly those such as restaurants and stores that are located near the construction site.

Since construction of the canal will probably require certain types of local construction employees, the unemployment rate in the area should decrease somewhat. However, the canal construction will promote little indirect employment. While employment opportunities may increase, prices of goods and land may also increase thereby affecting the resident's buying power.

The potential transportation problems may create some anxiety among area residents. Residents are accustomed to shopping and working throughout the area and their major means of transportation is private automobile. The result of population increases will mean additional traffic and longer commuting times. A proposed public transportation system may alleviate this potential problem. There are additional solutions such as construction of freeways and establishment of staggered working shifts.

Given the diversity of the Brazosport residents, it is difficult to postulate any negative impact on the traditional values of residents due to introduction of new residents as a result of canal construction. Additionally, no measureable increase in crime should result from canal construction.

Aesthetically, the loss of agricultural and woodland habitat may negatively impact residents in the area. This is especially true in the Jones Creek area, as will be discussed further. In the Brazosport area as a whole, the loss of agricultural and grazing land will impair migratory waterfowl management and hunting. To the extent that marsh habitat quality is reduced, sports fishing and shellfish harvest may be impaired, thus affecting the tourism and commercial fishing industries. Local residents may feel the loss of this land to industrial development and the impaired sports fishing to be negative, aesthetic impacts.

Jones Creek. Due to its close proximity to the proposed canal site, the municipality of Jones Creek may be negatively impacted in a number of ways. Jones Creek is a small town and quieter in nature than the more populous Clute-Lake Jackson-Freeport area. There are few commercial enterprises and these are mainly located along Highway 36. Residents probably value the relative isolation and quiet nature of their town. The canal would certainly disrupt this pattern. Noise, traffic, and the number of residents would probably increase.

The conversion of agricultural land and woodland to industrial use will certainly affect the character of the surrounding area. Although presently many of the residents on the north side of Jones Creek can view Dow Chemical from their homes, the conversion of nearby land to an industrial plant may negatively impact the aesthetic values of some residents.

While it is doubtful all of the new residents associated with canal construction will locate in the area, a number may choose to live near the actual construction area. This may increase the number of mobile homes in the town and deplete the supply of available housing. During a visit to Jones Creek, a number of houses for sale were located, but there are few multiple family units and no large apartment complexes.

The construction of the postulated canal might require relocation of a number of families who now reside on the north side of the town. While relocation due to industrial development has occurred in the Brazosport area, the relocation of Jones Creek residents is definitely a negative impact on the lives of these people.

In the event that the proposed canal construction was actually undertaken, close discussion and cooperation with Jones Creek residents and officials should be encouraged. It is their community which would be most negatively impacted by the project and they should be included in the decision-making process, as should residents and officials throughout the Brazosport area.

Social and Infrastructural Impact Analysis References

Applebaum, R. P. 1970 *Theories in Social Change.* Chicago: Markham Publishing Co.

Brazosport Chamber of Commerce. 1976. *Brazosport.* Chamber of Commerce Brochure.

Carnes, S. and P. Friesma. 1975. *Urbanization and Northern Great Plains.* Evanston, Ill.: Center for Urban Affairs, Northwestern University.

Parson, T. 1966. *Societies.* Englewood Cliffs, N.J.: Prentice-Hall, Inc.

Research and Planning Consultants, Inc. 1977. *Offshort Oil: Its Impact on Texas Communities.* Prepared for Texas Coastal Management Program. General Land Office of Texas. Austin, Texas.

Shields, M. A. 1975. "Social Impact Studies: An Expository Analysis." *Environment and Behavior.* Vol. 7, No. 3. New York: Sage Publications, Inc., September 1975. pp. 265-284.

State Department of Highways and Public Transportation. Personal communication. June 3, 1977.

Texas Education Agency. 1976. 1973-1974 Annual Enrollment Figures. Austin, Texas.

University of Texas at Austin, Bureau of Business Research. 1976. *Atlas of Texas.*

University of Texas. 1973. *Population Projections for Texas Counties: 1980-2020.* Austin, Texas: Population Research Center.

Vlachos, W. B., W. J. Filstead, S. E. Jacobs, M. Marunjama, J. H. Peterson, Jr., and G. Willcke. 1975. *Social Impact Assessment: An Overview.* A report submitted to the U.S. Army Engineer Institute for Water Resources, Fort Belvoir, Virginia.

Wallace, A. 1970. *Culture and Personality.* New York: Random House, 2nd edition.

Wolf, C. P , editor. 1974. *Social Impact Assessment.* Milwaukee: Environmental Design Research Association, Inc.

IMPACTS OF INDUSTRIAL SITE DEVELOPMENT AND OPERATION

The purpose of this study is to examine the feasibility of industrial development along an inland canal vis-a-vis traditional waterfront development. The primary differences in impacts between the two types of development occur during the canal construction and industrial site preparation phases. The economic, environmental, and social impacts associated with these activities were discussed in detail in the previous section.

The residents of the State of Texas, Brazoria County, and the Brazosport area will also be affected by the construction and operation of the industries which locate in the study site. These impacts, however, would be expected to be similar whether the industries located along an inland canal or in a traditional waterfront development. Because the focus of this study is on identification and analysis of effects unique to development along an inland canal rather than of the general impacts of refinery and petrochemical construction and operation, this section identifies only major impact "issues" associated with the industrial site development and operation.

Refinery

Capital investment requirements for a new refinery range from about $1,500 to $3,000 per barrel per day of installed capacity, depending to a large extent on the area in which a refinery is built and on its complexity (New England River Basins Commission, 1976). Assuming a capital cost per daily barrel of $2,500 (Bankers Trust Company, 1976), the capital investment in the 240,000 B/D refinery would equal $625 million.

Direct income generated in the state by construction of the refinery is estimated by considering the distribution of refinery construction costs along the Gulf Coast and by applying this distribution to the estimated capital investment requirement. The results of this comparison are shown on Figure 88. Estimated labor costs and thus direct personal income is about $140.6 million. Indirect personal income can be derived through the use of the income multiplier from the State of Texas I/O Model (1972 I-O Model, Draft Version, 3-16-77). For the Industrial Construction sector (Sector 24), $27,183 in total income is generated per dollar of direct income. Thus, total income generated in the state as a result of the refinery construction is about $382.2 million; of this, $140.6 million is indirect income.

Figure 88

Distribution of Refinery Construction Costs

Components	Percent of Construction Costs for a Gulf Coast Refinery[1]	Estimated Cost of Postulated Refinery[2] ($ Million)
Labor	22.5%	140.6
Materials & Equipment	40.5%	253.1
Contractor Costs	25.9%	161.9
Engineering & Design	11.1%	69.4
TOTAL	100.0%	$625.0

1. *Oil and Gas Journal,* August 20, 1973.
2. Derived by applying cost distribution to the refinery estimated cost of $625 million.

The total number of direct construction employees for such a project can vary from 1800 to 2200 (New England River Basins Commission, 1976). As with indirect income, indirect employment can be calculated through the use of employment multipliers from the state I/O Model (*Texas 1972 Employment Multipliers,* Draft Version, June 7, 1977). In the Industrial Construction Sector, 1.8 indirect employees per direct employee per year are required. Thus, between 3240 and 3960 indirect employees will be required in the state.

About one year for design and three years for construction may be required to build the refinery (New England River Basins Commission, 1976). Consequently, the employment and income effects will be spread out over the time span. The effects are also estimated for the entire state; the distribution of these impacts within the state and within Brazoria County will depend on such factors as location of contracting firms, their expenditure patterns, the percentages of workers which will be residents, commuters and new residents and where the workers reside. While no attempt was made to allocate these effects to specific locations, in general these relationships exist:

1. Local firms tend to hire more employees locally than nonlocal firms. The construction of the refinery by nonlocal firms or a local shortage of specific construction skills would imply an influx of workers into the area and fewer direct employees drawn from the local labor pool.

2. Some of these nonlocal construction workers will relocate with their families, thus temporarily increasing the receiving area's population, school enrollment, housing and demand for social goods and services.

3. Tax revenue will accrue to those units of government in which the physical plant of the contracting firms are located and in which construction-related expenditures, including wages, are made.

In Chapter III-A, a direct employment requirement for refinery operation was postulated to be equal to 870. The indirect employment required can be calculated through the application of an employment multiplier from the state I/O model. For the Petroleum Refining Sector (Sector 63), approximately 9.7 indirect employees would be required per direct employee per year. Thus, indirect employment required in the state as a result of refinery operation is postulated to be about 8440.

Annual employee compensation in the U.S. refining industry averaged $22,326 per full-time equivalent employee in 1975 (U.S. Department of Commerce, 1976). This includes supplements to income such as employee contributions to social security and pension health funds as well as wages and salaries. Multiplying average employee compensation by direct employment gives estimated direct personal income per year in excess of $19.4 million.

Indirect personal income can be calculated for this sector by applying its indirect income multiplier, equal to $9.9803 per dollar of direct income per year to the direct income estimate. Indirect income is thus estimated to be approximately $193.6 million. Thus, total personal income generated in Texas through operation of the refinery equals about $213 million per year.

These impacts are determined for the State of Texas as a whole, while it is expected that the majority of the economic impact of the refinery operation will be felt by the Brazosport area and Brazoria County, the actual allocation of the effects within the state and county will depend in part upon the expenditure patterns of the firms, its employees, and the origin-of-employment.

Petrochemical Complex

The economic impacts of construction and operation of the petrochemical complex can be estimated by employing the process used in assessing refinery impacts. The investment cost of such a complex is expected to exceed $600 million (Seadock, p. 6.3.20). Assuming the same distribution of construction costs as for refineries, about 22.5 percent of the investment cost of $135 million, would be received as direct personal income by the construction sector.

Because the investment cost of the petrochemical complex is approximately the same as that of the petroleum refinery, it seems reasonable that the construction impacts will be similar. As with refinery construction, the distribution of the impacts throughout Texas will depend upon the expenditure and employment patterns of the contracting firms.

Direct employment in the petrochemical complex was estimated in Chapter III-A to be 1930. Application of the indirect employment coefficient from the state I/O Model for the Organic Chemical Sector (Sector 54), equal to 4.9 indirect employees per direct employee per year, gives annual indirect employment requirements of about 9460.

Average annual employee compensation in the U.S. in the chemical industry equalled

$16,909 in 1975 (U.S. Department of Commerce, 1976). Thus, direct income will be about $32.6 million per year, assuming direct employment of 1930. The indirect income multiplier for Sector 54 equals $4.1793 per dollar of direct income per year. As a result, annual indirect income generated in the state is estimated to be equal to $136.2 million. Total personal income, generated through the operation of the sum of direct and indirect income, is postulated to be approximately $168.8 million. As with refinery operation, the allocation of these impacts on Texas will be determined in part by actual expenditures and employment patterns.

Estimated employment requirements and personal income generated in the state as a result of the construction and operation of the refinery's petrochemical complex are summarized in Figure 89. While no attempt was made to distribute these impacts within the state and Brazoria County, these observations may be made concerning possible economic impacts on the Brazosport area in particular and the county in general:

1. The unemployment rate in Brazoria County in April, 1977, was 4.5 percent, indicating an economy which is approaching the full-employment level. During the construction phases, heavy reliance on non-local contracting firms and a shortage of workers in the local labor pool would most likely be reflected in a combination of increased commuter traffic and a temporary influx of new resident workers and their families. During the operation phase also, an increase in new resident employment and commuters can be reasonably expected. The actual employment pattern, of course, will depend upon such factors as the availability of local labor and adequate housing.

2. New resident employment, whether it is for the duration of the construction project or associated with the operation phases, implies increased population, student enrollment,

Figure 89

Summary of Annual Economic Impacts,
Refinery & Petrochemical Complex
Operation & Construction[1]

Impact	Construction	Operation
Refinery:		
Employment	5040-6160	9,310
Direct	1800-2200	870
Indirect	3240-3960	8,440
Personal Income ($ Million)	$382.6	213.0
Direct	140.6	19.4
Indirect	241.6	193.6
Petrochemical Complex		
Employment		11,390
Direct	1800-2200	1,930
Indirect	3240-3960	9,460
Personal Income	$367.0	$168.8
Direct	135.0	32.6
Indirect	232.0	136.2

1. These impacts are for the State of Texas as a whole. Allocation of these impacts within the state and within Brazoria County will depend upon expenditures and employment patterns. Because of its proximity to the study site, many of the impacts are expected to be experienced by Brazoria County in general and the Brazosport area in particular.

and demand for housing and social goods and services in the area in which the new residents locate. In the Brazosport area, housing appears to be the most critical issue, with current occupancy of rental units approaching 100 percent.

3. Direct and indirect tax revenue will accrue to the State of Texas and to local units of government. The Brazosport area in particular should experience an increase in tax revenue as property taxes are paid on the study site. These tax revenues will be offset by the increased infrastructural costs resulting from demands on social services by the new resident population. Consequently, governmental units will experience surpluses or deficits to the extent to which taxes received exceed or are less than the increased infrastructural costs.

Environmental Impact Issues

The activities of Phase 3, industrial site development and operation, which may involve important environmental impact issues include industrial plant (petrochemical and refinery) construction, groundwater and surface water use, and industrial waste generation and disposal.

Industrial Plant Construction

As with Phase 2 utility facility construction, there would generally be little additional ecological impact due to refinery or petrochemical plant construction. The construction activities would occur within an already modified industrial site environment which by design, includes various controls on site runoff and pollution of local watercourses. Air quality impacts would occur from vehicle and construction equipment exhaust, but would probably be of low magnitude because of the small amount of loadings and the good atmospheric mixing characteristics. It is possible that construction noise would be noticed by the community of Jones Creek.

There would be a substantial change in land-use patterns in the Brazosport area with the construction and operation of industries along the inland canal. At the present time (1975 data) 55 percent of the developed land area is residential and 29 percent is industrial. With complete development of the inland canal site, industrial acreage would increase to 62 percent of developed area and the proportion of residential acreage would decrease to 29 percent. Industrial land use would increase by 3.5 percent to 4.7 percent of total acreage in the study area (see Chapter II-B-5 for census tract data).

Water Withdrawal

The expected groundwater withdrawal rate would be 9 mgd (million gallons per day). The industrial groundwater demand represents a 20 percent increase over the current (1974) withdrawal rate in Brazoria County of 35 mgd (39,300 acre-feet/year). However, the industrial groundwater well field would be concentrated in one area of the county, as many areas are already fully developed or overdrawn, and as the cost of water supply mains is minimized by having one or two trunk lines serving a smaller area. Therefore, locally the percent increase of water withdrawal would be much greater than 20 percent.

The most likely area for groundwater development, based on aquifer (Evangeline and lower Chicot units of the Gulf Coast Aquifer) sand thickness and dependable yield is in the area north of a line connecting Harris Reservoir, Angleton, and Liverpool. Areas to the northeast of Rosharon and north of Liverpool have subsided at least 0.5 feet (between 1943 and 1964); to the north of Manvel subsidence has been greater than 1 foot (Gabrysch, 1967). It is probable that subsidence in this area is more influenced by the core of depression under Houston-area groundwater withdrawal than by local withdrawals. There are, in that area, numerous surface tracings and other evidence of subsurface faults.

Therefore, groundwater development as part of Phase 3 must be considered in light of the probability of accentuating subsidence and of activating differential movement along the subsurface

faults, which may be translated to the surface as fault scarps with concomitant structural damage. A more complete discussion of the interrelation between groundwater withdrawal, subsidence, and surface faulting may be found in Chapter II-B-2.

Surface water requirements would include 13 mgd for process water and 110 mgd for cooling water. The project's surface water system assumed that process water demand would be met by a diversion from the Brazos River at Brazoria, above tidal influence. Cooling water demand would be met by intake of harbor water. There would be two water resource recirculation paths. First, treated wastewater (approximately 90 percent of process water input) would be used to supplement surface and groundwater sources in meeting total water demand. Second, some and possibly all of the treated wastewater would be discharged into the harbor, where it would be available as cooling water. Once-through cooling water would be discharged to the Brazos River as the project's water system output.

The major impact of the project's surface water use is in reducing available remaining Brazos River water. The 13 mgd (15,000 acre-feet per year) demand represents all current, unsold yield of the river in its coastal segment. Future industrial expansion in the area requiring surface water would have to purchase existing water rights. This impact is not limited to Brazoria County because Brazos River water is allotted under a statewide planning program. This impact would be less important if a proposed reservoir on the Navasota Tributary is completed.

Withdrawal of water from the Brazos River may possibly allow greater tidal salinity influence in the river below Brazoria. However, the water diversion is only about 0.3 percent of average daily Brazos River flow. This possible impact would be exacerbated by the discharge of saline cooling water to the river at the Highway 36 bridge. Further discussion of altered river salinity appears in the next section on waste generation and disposal.

Waste Generation and Disposal

The magnitude of environmental waste loadings from the refinery/petrochemical complex would depend upon chemical characteristics of the crude oil and chemical feedstock, plant design and complexity, the type of pollution control equipment installed, and discharge and emission standards (New England River Basin Commission, 1976). Figure 90 presents expected daily levels of air emissions, wastewater, and solid waste generation for a typical 250,000 barrel per day refinery

Figure 90

Typical Environmental Loadings Associated With a 250,000 BBLS/D Refinery/Petrochemical Complex

Air Emissions (pounds per day)

particulates	SO_2	CO	NO_X	HC
24,480	107,440	7,260	55,810	112,330

Wastewater Loadings (pounds per day—30 day average)

BOD	TSS	COD	Ammonia (N)
285	285	1550	348

Solid Wastes (pounds per day)
25,000

Source: New England River Basins Commission, 1976. *Onshore Facilities Related to Offshore Oil and Gas Development. Factbook.* Boston, Massachusetts: New England River Basins Commission.

associated in design with a petrochemical complex. Air emissions data assume present technology, wastewater loadings assume advanced or tertiary, treatment under best available technology economically achievable (BATEA), and solid waste generation assumes a distribution of 10 percent trash and garbage, 15 percent spent catalysts, and 75 percent incinerator (combustion of biological and oily sludges) ash.

Ambient particulate and photochemical oxidant levels are current air quality problems in the Brazosport area (see Chapter II-B-1). The refinery/petrochemical complex could possibly increase industrial point-source gaseous loadings to the atmosphere by as much as 22 percent. Particulate loadings could be increased by as much as 74 percent. Air emissions would therefore clearly be an impact.

Air quality is currently an important impact issue in the Brazosport area as well as throughout the whole Texas coastal zone, classified by EPA as a Class II non-degradation area. Industries in the Brazosport area are currently following a voluntary offset policy. The increased loadings associated with the inland canal industrial operation could make governmental enforcement a greater necessity. Furthermore, by increasing the net air quality problem, the inland canal industries would indirectly affect future expansion plans of existing industry, as well as of new locating industries.

As previously mentioned in the description of the industrial plant circulation of surface water, process wastewater would be discharged into the inland canal harbor after advanced treatment (between secondary and tertiary levels). The wastewater loadings should not tend to be concentrated in the harbor, as cooling water would be withdrawn from the harbor and discharged into the Brazos River after use. The impacts of both process wastewater and cooling water would be located in the receiving area of the Brazos River rather than in the GIWW or inland channel.

In the period of September, 1972 to August, 1973, 22 industrial sources and one electrical generation plant source discharged approximately 3854.4 mgd with 14,809 lb./day BOD into the tidal segment of the Brazos River. Water quality is good with possibly low dissolved oxygen levels under low river flow conditions. At the discharge station, river bottom (in saline wedges) salinity varies from 6 ppt in winter to 25.5 ppt in the spring to 15.4 ppt in the summer to 12.5 ppt in the fall. River bottom temperature varies from 12.2°C (54°F) in winter to 33.9°C (93° F) in summer. The salinity of the discharge might be comparable to the GIWW, which is the source of harbor water withdrawn for cooling, assuming that process dilution and concentration factors cancel. GIWW salinity varies from 7.6 ppt in winter to 2.3 ppt in the spring to 22.9 ppt in summer and to about 12 ppt in the fall.

Process wastewater loadings may possibly not pose significant impacts on Brazos River quality. However, this possibility should be investigated in much greater depth. The discharge may tend to increase river water salinity in the winter and summer, slightly decrease in the spring, and might result in little change in the fall. The impact of increasing salinity through the discharge may be exacerbated by decreasing net flow at the upstream diversion. Temperature effects of the discharge water would depend upon the heat content of the discharged cooling water, which would have approached river temperature while in the on-site holding ponds. The discharge may tend to moderate the annual temperature range of the tidal river segment. Finally, possibly impacts on river channel flora and fauna resulting from potential water quality, salinity, and temperature alterations should be considered as an issue, but are not discussed further in this analysis because of the uncertainty of the extent of physical/chemical impacts.

The primary environmental impact of solid waste generation would be in consuming land acreage for sanitary landfill operations. In the long term such filled sites could be returned to other use. With suitable choice of location for the landfill operation (see Figure 14) and sound environmental management of the site, impacts of solid waste disposal may be minimized.

Social and Infrastructural Impact Issues

This section presents a general discussion of the possible infrastructural and social impacts of industry facility construction and operation in the Brazosport area. It is important to emphasize two points:

1. This study designated Brazosport as the hypothetical site for location of the development. The location of the site elsewhere might change substantially the potential list of social and infrastructural impacts.

2. A complete social impact assessment of site development and operation would require extensive study. Questionnaire or on-site interviewing would be necessary to discover the baseline attitudes of local residents. Additionally, longitudinal assessments of change and formative evaluations should be conducted.

In this particular area, the social impacts of inland canal associated industrial facility construction and operation should parallel those that would be experienced given a more traditional form of development. In both cases, the number of new resident employees should be approximately the same. It is estimated that the industrial facility operation would require 1800-2200 direct employees and 3240-3960 indirect employees. These employment figures relate to the state as a whole, and the actual number of local new residents cannot be predicted. Given the low unemployment rate in the area, it could be assumed that a significant number of new residents would move to the area.

Certain of the specific planning issues discussed in the Social and Infrastructural Impact Analysis would be critical with a significant population increase. These include: local fiscal deficits, housing, medical facilities, education facilities, and transportation. In addition, air and water quality may be negatively affected.

The hypothetical site location lies outside the incorporated limits of any municipality and therefore is only in the county taxing jurisdiction. The possibility of municipal annexation of the industrial development depends on (1) the need of the site for public utilities, and (2) the ability of the municipality to timely extend services to the annexation. While local municipalities could not directly tax the development without annexation, local government revenue would indirectly increase through sales tax and various other personal property taxes. The disparity between the local governments' revenue and deficits would determine the positive or negative impacts to their finances. Should local deficits occur, services to residents could be negatively affected.

While it is doubtful that negative impact on the lifestyles of Brazosport residents as a whole would occur, the residents of Jones Creek may experience a substantial change in the quality of their lives. Of course, this would probably hold true for persons living in residential areas near industrial development regardless of the specific location. Brazosport, particularly the municipalities of Freeport, Clute, and Lake Jackson, is a diverse metropolitan area. However, Jones Creek is smaller and more isolated and residents may view nearby industrial development as destructive to their private lives. Residents of Jones Creek appear to enjoy living in an area where larger tracts of residential land can be acquired. The land near the canal may increase in value to the point where continued residential use becomes impractical. Areas that remain residential may experience increased noise and traffic.

Nearby industrial development could also effect the web of social relations in the Jones Creek area. Community cohesion could be disrupted. However, it seems likely that the lifestyles of residents of Jones Creek resemble those of the residents of Freeport, Lake Jackson, and Clute, and that the important social networks of Jones Creek extend across the municipal boundaries. Residents in these more populated areas seem to welcome industrial development rather than viewing it

as negative or disruptive. Thus, the major impacts of the operation of the canal may be socio-ecological; in other words, changes in living environment as opposed to socio-economic. However, only in-depth research would validate this hypothesis.

Impacts of Site Development and Operation References

Bankers Trust Company. 1976. *Capital Resources for Energy Through the Year 1990.* Prepared by the Energy Group Bankers Trust Company, New York.

Gabrysch, R. K. 1967. *Development of Ground-water in the Houston District, 1961-1965.* Texas Water Development Board, Report 63.

New England River Basins Commission. 1976. *Onshore Facilities Related to Offshore Oil and Gas Development Factbook.* Boston, Massachusetts: New England River Basins Commission.

Oil and Gas Journal. August 20, 1973. Petroleum Publishing Company, Tulsa, Oklahoma.

Seadock, Inc. 1974. *Environmental Report Summary.* 3 vols. Texas Offshore Crude Oil Unloading Facility.

Texas Water Development Board. March 16, 1977. 1972 I-O Model, Draft Version, Computer Printout.

Texas Water Development Board. June 7, 1977. Texas 1972 Employment Multipliers. Draft Version, Computer Printout.

U.S. Department of Commerce. 1976. *Survey of Current Business,* July 1976.

V. ALTERNATIVES TO THE INLAND CANAL CONCEPT

The diverse navigation developments on the Texas coast provide a range of alternatives to the inland canal concept. This section presents a comparative analysis of the construction procedures, activities, resource area locations, and impacts of general traditional navigation developments and of the inland canal concept as previously evaluated in the report.

The comparative analysis assumes that the differences, rather than the similarities, between the site preparation and navigation construction approaches are important. In the following sections, the differing activities and resource area locations of traditional navigations (see Chapter I) are used to isolate the differing impacts of the traditional versus inland canal approaches. Finally, the differing impacts are evaluated in terms of the relative advantages or disadvantages inherent in the inland canal concept.

The major differences in impacts which has been identified is that the inland canal approach affects upland habitat loss and disruption, whereas traditional approaches generally affect wetland habitat loss and disruption. Additionally, the inland canal approach requires lower volume and frequency of maintenance dredging, and therefore poses few problems of dredge materials disposal.

The state of scientific resource assessment is such that it is not presently possible to state whether the habitat and resource area loss under the inland canal approach is more or less important than that loss under traditional industrial navigation. However, this study's evaluation does demonstrate that the inland canal approach minimizes the impacts on wetlands which are typical of traditional navigation approaches.

Impacts Typically Associated with Navigation Projects

The principal categories of environmental impact associated with typical navigation/industrial site projects include habitat loss and alteration of channel hydraulic characteristics. There are many impacts of typical project activities within each of these categories. The details of such impacts vary, of course, with the particular location and design of the navigation channel and industry site components of the typical project complex. The purpose of this section is to summarize the major features of each of these two categories.

Wildlife habitat and vegetative stands are removed or disturbed along channel margins where bank clearing and stream widening are required. Benthic floral and faunal properties are removed with dredged deepening of a natural channel. The particular biologic impacts differ depending on whether the navigation project follows a wetland drainage course, tidal bayou, or major river. The characteristics of water movement, chemical constituents, and natural channel geometry in large part determine the presence and abundance of plant and animal species in and along the natural channels and differ with the various types of channels.

The land areas between stream or river meanders are either marsh (fresh to brackish depending on the relative influence of upland versus tidal inflow), swamp-timber, low-lying fluvial woodlands, or prairie grassland. Channelized straightening of the water course would cut through some of these resource areas, and certain habitat belt losses occur. Habitat between the meander loop and the dredged channel is isolated.

Dredging temporarily increases turbidity and sedimentation in the channel. In the long-term, there will be increased turbidity and sedimentation from accelerated bank erosion, industrial site earthwork activities, and from spoil disposal areas until vegetative stabilization occurs. The impact of this increased turbidity is felt by the flora and fauna of the estuary receiving inflow from the dredged stream.

Spoil disposal also results in direct and indirect habitat alteration. Spoil sites adjacent to the channel remove the vegetative communities found there. The recolonizing vegetation usually differ from previous assemblages, because of the elevation, drainage, and wetness characteristics of the spoil mounds. It is probable that many consumer species change at and near the sites in association with the changed vegetation. There is therefore a possible increase in community diversity in the local area.

The industrial site development represents the largest contiguous area of habitat loss. The area of influence of the industrial site, however, extends beyond the confined limits of its levees. Industrial developments on large land tracts may alter or destroy small drainage channels feeding nearby marshes. The sites also change the distribution of rainfall to groundwater, channels, and sheetflow. Vegetative communities adjacent to the site are affected to the extent that surface water characteristics, nutrient availability, and substrate wetness are altered.

The major hydrologic impact of navigation projects traditionally located in coastal watersheds is in channeling stream flow. Flow velocity may be increased by mechanical stabilization of channel banks, bulkheading, removal of channel bottom irregularities, and straightening of the channel. Increased erosion along the channelized stretch and increased sedimentation downstream are common results. Maintenance dredging is often more frequent in the downstream section. Sedimentation can affect channel bottom inhabitants. Channelizing flow also tends to reduce water exchange between the channel and adjacent resources areas, especially marshes and river bottomland swamps. The reduction of water exchange is felt through long-term declines in substrate wetness and a decrease in nutrient supply, and possibly through altered salinity in the channel.

Impacts Differing Between Traditional and Inland Canal Concepts

Three points should be made concerning an assessment of differences between the two navigation/individual site concepts. First, it is obvious that a generalized summary of traditional projects would not address project specific design components and therefore may only identify the major impact issues which are typical of the traditional projects. Second, it is reasonable to generalize some project design components and impacts which were related to site-specific environmental concerns in this study's inland canal "test example." Third, the comparison of impact differences between the traditional and inland canal concepts is based on unmitigated conditions. There are, however, many feasible and effective adjustments which would lessen a set of impacts within either approach. Many of these adjustments would pertain to site specific environmental problems.

Intrinsic impact issues associated with both traditional and inland canal projects are habitat loss and alteration, and alteration of natural drainage patterns. The differences between the impacts of the two types of navigation projects derive from the essential differences in location of project activities in respect to resource areas.

Channel dredging habitat loss in traditional projects involves tidal bayou, rivers, and coastal wetlands and lakes. Channel dredging habitat loss in the inland canal project involves upland resource aress, such as prairie grassland. Excess dredge spoil in traditional projects is often disposed of in wetlands. The excess spoil in an inland canal project would be placed adjacent to the channel in upland ecosystem settings. Industrial sites may be located in either reclaimed marshland, in bay margin, or in upland environments under the traditional approaches. The inland canal approach, in its first step of corridor selection, locates a suitable upland area for industrial site development.

Traditional navigation/industrial site projects, by definition, disrupt bottomland or tidal stream drainage channels and associated water flow characteristics in adjacent low-lying areas. The inland canal is designed to cut a new navigation route across upland areas, intentionally avoiding natural drainage courses. Alteration of Redfish Bayou hydrodynamics in this inland canal "test case" may be assumed to be a unique impact of that site location. The possibility of increased river flooding problems in the "test case" is also a site-specific problem.

There are other environmental aspects which may differ between the two approaches. The inland canal industrial site development, by locating in upland areas to preferentially avoid wetlands, also may be less prone to hurricane surge flooding than would be an industrial site with traditional navigation access. The inland canal industrial site would require less extensive levee systems, especially as part of the channel excavation is used to raise site area elevation. In addition, an inland canal has lower maintenance dredging requirements than traditional navigation projects, as the former is located along upland drainage divides, rather than within a watershed.

There may be generalizable socioeconomic impact differences between the two industrial navigation approaches. It should be noted, however, that few formal sociological assessments of traditional industrial navigation projects, have been conducted, and therefore, there is little information for a socioeconomic impact comparison. The differences discussed here are deductive interpretations.

Socioeconomic impacts are largely a function of industrial site location, relative to city and county regulatory jurisdiction. The generalized location of traditional industrial navigation developments is along coastal waterways in or near already urbanized and industrial zones. It is possible that inland canal industrial development, by locating via upland route access, would generally tend to develop in a more rural setting. To the extent that this generalized urban-rural distinction is valid, several socioeconomic issues may be raised.

The inland canal industrial complex, by occurring in a rural setting, may be outside of the taxing jurisdiction of the cities in which the construction and operation workers reside. The workers demand public services of those cities, which in turn do not receive tax dollars from the industrial site. Fiscal deficits and decreases in the quality of available public services would possibly be more frequent impacts of the inland canal development than of traditional developments.

An inland canal industrial complex in a rural setting may result in different land price and land use pattern impacts than would traditional urban-associated, industrial navigation projects. The escalation of land value assessment of adjoining rural land may be more abrupt when a "new" (industrial) land use pattern develops than it would if the adjoining area were already industrially influenced.

As traditional industrial navigation projects have developed on coastal bay margins, marshes, and bayous, such projects likely have had greater impacts on existing recreational opportunities than would an inland canal with an upland route. Both approaches tend to diverify recreational opportunities, to the extent that water based recreation in the channels is feasible and allowed.

In summary to this point, the major differences between the traditional and inland canal industrial navigation projects derive from differences in environmental location of each respective project type. The ecological impacts of traditional approaches may be generalized as upland-associated. Differences in socioeconomic impacts, to the extent to which they occur, may be a function of rural versus urban land characters. However, there would be many exceptions to a generalization that the inland canal tends to rural areas, and traditional projects tend to urban areas.

Evaluation of the Differing Impacts

Given that the important essential differences between the traditional and inland canal industrial navigation approaches are a function of ecosystem location, the evaluation of the differing impacts depends upon recognizing ecological and human use values which are intrinsic to the different ecological areas affected by the two alternative approaches. This necessary value comparison forms a test of the specific inland canal postulation of this study. The value comparison should show that the environmental constraints on the project design and location were correct and appropriate.

Numerous attempts have recently been made to not only measure the absolute value of various types of wetland and upland ecological systems, but also to compare relative ultimate human use values between wetland and upland types. Such studies include: Schmedeman, Ronnau, and Wooten, 1974; Pope and Gosselink, 1973; Odum and Skjei, 1974; and Odum and Odum, 1972.

The various aspects taken into consideration in these investigations are biological productivity, agricultural efficiency of energy conversion, sport fishing and hunting, marine commercial fisheries dependence on wetlands, and land value of development (industrial, residential) replacing natural environments.

An important conclusion of the research is that wetlands, including marshes, grassflats, bay bottoms, island bird rookeries, and estuaries, have a high ecological value. Recognition of this value has resulted in the development of policy in regulatory agencies to protect and maintain wetlands to the extent feasible.

However, such investigations have not been able to demonstrate the relative value of wetlands as opposed to uplands, in large part because of the multiplicity of conflicting ultimate uses of each area. Therefore, it is not possible to make a reasonable statement of whether the upland inland canal approach or traditional wetland approach present the more important impacts because of inherent locational differences.

The environmental constraints developed in Chapter II-B-1 were developed on the assumption that an effective alternative to traditional industrial navigation projects should avoid the impacts which are typical of such projects. This section's evaluation of the differences in impacts has shown that the postulated inland canal "test case" succeeds in minimizing the environmental impacts representative of traditional projects.

Alternatives to the Inland Canal Concept References

Odum, E. P. and H. T. Odum. 1972. "Natural Areas as Necessary Components of Man's Total Environment." *Thirty-Seventh North American Wildlife Conference.* pp. 178-189.

Odum, W. E. and S. S. Skjei. 1974. "The Issue of Wetlands Preservation and Management: a Second View." *Coastal Zone Management Journal,* Vol. 1, No. 2, pp. 151-163.

Pope, R. M. and J. G. Gosselink. 1973. "A Tool for Use in Making Land Management Decisions Involving Tidal Marshland." *Coastal Zone Management Journal,* Vol. 1, No. 1. pp. 65-74.

Schmedeman, I. W. R. M. Ronnau, and A. B. Wooten. 1974. "Dynamids of the Rural Land Market." In: *Texas Agricultural Progress.* Vol. 20, No. 4. Texas A&M University. Agricultural Experiment Station.

Additional Data Needs

Aspects of the inland canal conceptual design which should be further substantiated with field data include:

1. The sensitivity of wetland systems to alteration of the upland surface drainage regime;
2. the extent to which sheetflow can be maintained or restored in releases from runoff retention ponds;
3. the efficiency and maximum capability of a diversion system which carries streamflow underneath the navigation channel;
4. the potential for saltwater intrusion into local shallow aquifers, particularly in a sandy substrate;
5. compatibility of the conceptual design to the plans of state and federal agencies.

Deep Draft Channel

Additional research should investigate the feasibility of the inland canal concept for deep draft facilities. The methodology utilized for design of the barge-draft channel would be applicable. Principal variables include:

1. types of industries attracted to deep draft waterfront and their requirements;
2. the differing engineering parameters for a larger channel;
3. dockage, turning basin, and terminal facilities requirements;
4. the alternatives for access to the Gulf.

The deep draft alternative could be considered both as an expansion of a barge-draft facility as described in this report and initially as a deep-draft facility.

Waterfront Terminal Facility

The inland canal concept should also be evaluated in the context of an associated public terminal, rather than of an industrial complex as postulated in this study. In this context, the inland canal would provide navigation access to a public terminal connected to industrial sites distributed farther inland, primarily by pipeline but also by rail and highway.

APPENDICES

APPENDIX A

THEORY OF INDUSTRY LOCATION ANALYSIS

The analysis of location decisions has occupied the attention of geographers, economists, planners and others since the pioneering work by von Thunen (1826) on the most efficient organization of agricultural land. Further developments of the theory have been made by Weber (1928), Hoover (1948), Isard (1956), Losch (1943), and Greenhut (1956, 1963). A summary of the evolution of the factors influencing the location of industry is presented below.

The factors influencing industrial location were first studied by Alfred Weber (1928). Weber hypothesized that three factors influence the location decision of industry. Two of these factors, transportation and labor costs, are factors characteristic of a region, while the third, agglomeration or deglomeration, is a local factor.

The third factor described location in terms of economic advantage accruing from either concentration or dispersal of industry and associated activities. The economic forces which influence this factor have been further described by Isard (1975) and Bary, Conkling, and Ray (1976) in four categories.

1. Scale Economies: Economies in the internal production of a given facility as its scale of operation increases.

2. Localization Economies: Economies accruing to several firms in a single industry at a common location, due to utilization of common service facilities, raw materials purchase, waste processing, and the like.

3. Urbanization Economies: Economies associated with the increases in the total size (in terms of population, industrial output income and wealth) of a location for an aggregate of industries, arising from such advantages as a broad-based labor supply, and diverse facilities, services, and infrastructure.

4. Industrial Complex Economies: Economies arising when closely related productive processes are linked together by materials and byproducts flows.

Edgar Hoover (1948), expanding on Weber's basic hypothesis that an industry will be guided by location factors which minimize costs of production, explained industrial location in terms of minimizing transfer costs as well as production costs. Transfer costs are those costs associated with distance. Hoover suggests that the costs of procurement of raw materials and the cost of distribution of products to the ultimate user have a significant bearing on profitability and thus on industry location. Industries which are sensitive to these transfer costs can be classified as either raw material- or market-oriented. Large and variable procurement costs in relation to total costs result in a raw material-oriented industry. Market-oriented industries have large and variable output distribution costs.

A significant factor which is neglected by the many theories of industrial location is demand. Consideration of this element suggests that the maximization of profit rather than the minimization of cost actually dictates the firm's *optimum* location. Thus, location analysis involves a comparison of not only the costs of production at a given location, but also the demand or revenue factors. Greenhut (1956, p. 4) theorized that firms select a location which will maximize the long run profit of the firm:

The theory of plant location is one segment of economic theory. It, too, rests on the principle of substitution. The extent to which labor can be substituted for capital or land and vice versa is basically the same problem as the selection of a plant site among alternative locations. Both decisions attempt to maximize the ends. The objective is accomplished when the same means are allocated among competing ends in the optimum way.

Figure A1 summarizes the major factors which Williamson (1977) has identified as influencing the location of industrial plants. The relative importance of the factors to the location decision is not the same for all industries, nor are these classifications mutually exclusive. The requirements of many industries encompass more than one factor. For example, a firm may need a location near its final consumer (market-orientation) as well as require a certain type of labor. Thus, the location decision will likely involve a trade-off among a variety of factors. The importance an industry places on these factors will depend on (1) the nature of the industry and the relative quantities of its different inputs and outputs; and (2) the geographic variability of the price and productivity of the different inputs and the prices of the outputs (Beckman, 1968).

Figure A1

Summary of Location Factors

I. Cost variations associated with
   - A. Transfer of inputs
     1. Materials
     2. Fuels
     3. Transferable services including information
   - B. Transfer of outputs
   - C. Local inputs
     1. Labor
     2. Land (site, climate, and other land resources not readily transferable)
     3. Local government services
     4. Local external economics of scale

II. Gross revenue variations

III. Personal factors (influences for factors, such as amenities, not already reflected in the above cost and revenue variations)

Source: Robert B. Williamson, University of Texas Finance Department, "Location Models For Use in Forecasting Regional and Urban Growth," unpublished paper, 1977.

Kinnard and Messner (1971, pp. 53-55) suggest that, depending on the relative importance of the above factors, industries can be characterized as: (1) market-oriented; (2) materials or resources-oriented; (3) transportation-oriented; (4) labor-oriented, or (5) non-oriented or "footloose" industries. The focus of this study, of course, is on industries which are transportation-oriented, and specifically on those industries which place critical importance on the availability of water transportation facilities.

The models postulated by location theorists have traditionally emphasized either minimizing costs or maximizing revenues in determining an optimal location. More recent work has attempted to integrate the two approaches into a generalized theory of location. Although existing models may not be totally applicable to a specific real world case, they are sufficiently developed to provide a theoretical framework within which the process of location decision-making and industrial development can be described and analyzed.

Appendix A References

Barry, Brian L., Edgar C. Conkling, and D. Michael Ray. 1976. *The Geography of Economic Systems.* Englewood Cliffs, N.J.: Prentice-Hall, Inc.

Beckman, Martin. 1968. *Location Theory.* New York: Random House.

Greenhut, Melvin. 1956. *Plant Location in Theory and in Practice.* Chapel Hill, North Carolina: University of North Carolina Press.

Greenhut, Melvin. 1963. *Microeconomics and the Space Economy.* Chicago: Scott Foresman.

Hoover, Edgar M. 1948. *The Location of Economic Activity.* New York: McGraw-Hill.

Isard, Walter. 1956. *Location and Space Economy.* Cambridge, Mass.: Massachusetts Institute of Technology.

Isard, Walter. 1975. *Introduction to Regional Science.* Englewood Cliffs, New Jersey: Prentice-Hall.

Kinnard, William N., Jr. and Stephen D. Messner. 1971. *Industrial Real Estate.* 2nd ed. Washington, D.C.: Society of Industrial Realtors.

Losch, August. 1966. *The Economics of Location* (translation of Die raumliche Ordnung der Wirtschaft, 2nd ed., 1944). New Haven: John Wiley.

Thunen, Johann Heinrich, Von. 1966. (a reprint of 1826 edition) Der isolirte Staat in Beziehung auf Nabonalokon onmie and Land wirtschaft. Stuttgart: Gustav Frischen.

Weber, Alfred. 1929. *On the Location of Industries* (translation of Uber den Standort der Industrie, 1909). Chicago: University of Chicago Press.

Williamson, Robert B. 1977. "Location models for use in forecasting regional and urban growth." Austin, Texas: University of Texas Finance Department. Unpublished paper.

APPENDIX B

PETROLEUM REFINERIES AND PETROCHEMICAL PLANTS LOCATED ON THE TEXAS GULF COAST

The Texas coastal area contains the largest concentration of petroleum refineries and petrochemical complexes of any state in the nation. Approximately 40 percent of the nation's petrochemical industries and 26 percent of the refining capacity are located in Texas coastal counties. In 1972, the total value of output from petroleum refineries along the coast amounted to $6.3 billion; the output value was $4.6 billion for petrochemical plants. At the same time, the refineries employed nearly 32,000 workers, and the petrochemical complexes employed approximately 45,000.

Figure B1

$ Million Output and Employment

Area	Petro-chemical	Emp.	Petroleum Refineries	Emp.
Beaumont-Port Arthur Area	$ 908	9,433	$2,476	14,997
Houston-Galveston Area	3,289	30,338	3,294	15,257
Victoria Area	184	1,953	–	–
Corpus Christi Area	202	2,708	522	1,371
Lower Rio Grande Valley	5	292	–	–
Total	$4,588	44,724	$6,292	31,625

Sources: *1972 Census of Manufacturers,* Department of Commerce, Washington, D.C. Texas Employment Commission, Austin, Texas unpublished data.

If the total effect of these industries on the economy was measured, the impact would be significantly higher. For example, the total income effect of these industries amounts to $16.3 billion for refining and $12.3 billion for petrochemicals. These industries not only employ many workers and significantly contribute to the economy but they are also the most capital-intensive industries in the coastal area. They also use more water in their processing than any other manufacturing industries along the coast.

While the petroleum refineries and petrochemical complexes are generally thought of in the same light, they are separate processes. The petroleum refining industries use crude oil as feedstock and produce gasoline and other fuels used for transportation, power generation, and heating purposes. The petrochemical industry uses natural gas, natural gas liquids, and byproducts from petroleum refining as a feedstock. Petrochemical plants manufacture a multiplicity of products including rubber, plastic synthetic fibers, and organic chemicals.

The refining and petrochemical complex is concentrated along the upper Texas coast in the Houston and Beaumont-Port Arthur areas. Figures B2 and B3 show the location and capacity of these plants. In total, refineries in the Houston-Galveston area have a capacity of 1.5 million barrels per day. The Beaumont-Port Arthur area refineries have a capacity of 1.3 million barrels per day.

Figure B2

Petroleum Refineries Located on the Texas Gulf Coast

Company	Location	Capacity
Jefferson County		1,294,000
American Petrofina, Inc.	Port Arthur	84,000
Gulf Oil Co.	Port Arthur	312,000
Mobil Oil Corp.	Beaumont	325,000
Texaco	Port Arthur	406,000
Texaco	Port Neches	47,000
Union Oil of California	Nederland	120,000
Hardin County		18,100
South Hampton Co.	Silsbee	18,100
Harris County		1,063,800
Atlantic Richfield Co.	Houston	213,000
Charter International Oil	Houston	64,000
Crown Central Petro Corp.	Houston	100,000
Eddy Refining Co.	Houston	2,800
Exxon Co.	Baytown	390,000
Shell Oil Co.	Deer Park	294,000
Galveston County		473,500
Amoco Oil Co.	Texas City	333,000
Marathon Oil Co.	Texas City	64,000
Texas City Refining Co.	Texas City	76,500
Brazoria County		85,000
Phillips Petroleum Co.	Sweeny	85,000
Nueces County		474,100
Champlin Petroleum Co.	Corpus Christi	67,700
Coastal States Petro Co.	Corpus Christi	185,000
Quintana-Howell Joint Venture	Corpus Christi	44,400
Southwestern Refining Co.	Corpus Christi	120,000
Suntide Refining Co.	Corpus Christi	57,000
Total Capacity		3,408,500

Source: *International Petroleum Encyclopedia.* (Tulsa, Oklahoma: Petroleum Publishing Co., 1976).

Figure B3

Petrochemical Plants Located on the Texas Gulf Coast

Company	Location	Feedstock	Major Products
Orange County			
Allied Chemical	Orange	Ethylene	Polyethylene
Firestone Synthetic Rubber & Latex Co.	Orange	Butane, Styrene, Butadiene	SBR-BR, Butadiene
Gulf Oil Chemicals	Orange	Ethylene	Hd polyethylene
Phillips Petroleum	Orange	Heavy Oil	Carbon Black
Jefferson County			
Arco Polymers, Inc.	Port Arthur	NA	ld polyethylene
Cosden Oil & Chemical Co.	Groves	Refinery products	Ethylene, proplene
Goodyear Tire & Rubber	Beaumont	Propylene, C-5 streams, butadiene	Polybutadiene
Gulf Oil Chemicals	Port Arthur	Refinery fractions	Ethylene, benzene, & benzene derivatives
Houston Chemical Co.	Beaumont	Ethylene	Ethylene glycol, ethylene oxide
Jefferson Chemical Co.	Port Neches	Refinery gases	Ethylene, ethylene & propylene derivatives
Mobil Chemical	Beaumont	Petro fractions	Ethylene, propylene benzene
Texaco	Port Arthur	Refinery fractions	Benzene, cyclohexane toluene
Union Oil Co. of California	Beaumont	Reformate	Toluene
Hardin County			
South Hampton Co.	Silsbee	NA	Benzene
Harris County			
Arco Chemical Co.	Channelview	Butanes, Butylenes	Butadiene, butylenes
Arco Chemical Co.	Houston	Refinery streams	Benzene, paraxylene
Arco/Polymers, Inc.	Houston	NA	Ethylene
Celanese Chemical	Clear Lake	Ethylene	Methanol
Charter Int'l Oil	Houston	NA	Solvents, toluene
Crown Central Petro Corp.	Houston	Reformate, toluene	Benzene
Diamond Shamrock	Deer Park-Pasadena	Ethylene, vinyl chloride, methane	Acetylene, ethylene dichloride, polyvinyl chloride
Diamond Shamrock	Pasadena	NA	Polypropylene
Dixie Chemical	Bayport	NA	Ethylene glycol
Ethyl Corp.	Pasadena	Ethylene	Alphaolefins, ethyl propylene & derivatives
Exxon	Baytown	NA	Benzene, ethylene, propylene & derivatives
Goodyear Tire & Rubber	Houston	Butadiene-Styrene	Styrene-butadiene rubber
Gulf Oil Chemicals	Cedar Bayou	Ethane	Ethylene, ld polyethylene
Hercules, Inc.	Bayport	NA	Polypropylene
J. M. Huber Corp.	Baytown	Refinery bottoms	Carbon Black

Figure B3 cont'd

Company	Location	Feedstock	Major Products
Harris County cont'd			
Merichem Co.	Houston	Refinery treating waste	Phenol
Oxirane Chemical Co.	Bayport	Propylene	Propylene oxide
Petro-Tex Chemical Corp.	Houston	Petroleum base stock	Butadiene
Phillips Petro Corp.	Pasadena	Ethylene, propylene, natural gas	Ammonia polyethylene
Reichhold Chemicals	Houston	Methanol	Formaldehyde
Rohm & Hass Co.	Deer Park	Natural gas	Acrylic esters
Shell Chemical	Houston	Petro fractions	Ethylene, propylene, benzene & derivatives
Soltex Polymer Corp.	Deer Park	Ethylene	Hd polyethylene
Tenneco Chemicals	Pasadena	Natural gas, vinyl chloride	Methanol, ammonia
U. S. Industrial Chemicals Co.	Houston	Ethylene	Ethylene derivatives
Galveston County			
Amoco Chemical Corp.	Texas City	Ethylene, benzene, petro fractions, refinery gases	Styrene
Marathon Oil	Texas City	NA	Cumene, toluene
Monsanto Co.	Texas City	Light crude oils, natural gas	Ethylbenzene, styrene
Texas City Refining Co.	Texas City	Refinery streams	Propylene
Union Carbide Corp.	Texas City	Natural gas, refinery gases	Ethanol, isopropanol
Fort Bend County			
Dow Chemical	Oyster Creek	NA	Ethylene derivatives
Chambers County			
Union Texas Petro	Winnie	Reformate, naptha	Benzene
Brazoria County			
Amoco Chemical Co.	Chocolate Bayou	Propylene, ethylene	Ethylene
Dow Badische Co.	Freeport	Propylene, acetylene, cyclohexane	Caprolactam
Dow Chemical Co.	Freeport	NA	Benzen & ethylene derivatives
Monsanto Co.	Alvin	Light crude oil	Ethylene
Phillips Petro Co.	Sweeny	Heavy oil, natural gas liquid, benzene	Ethylene
Matagorda County			
Celanese Chemical	Bay City	Ethylene, cyclohexane	Vinyl acetate
Calhoun County			
Union Carbide Corp.	Seadrift	Ethane, propane	Ethylbenzene, styrene
Nueces County			
Celanese Chemical	Bishop	Natural gas	Formaldehyde
Champlin Petro Co.	Corpus Christi	NA	Cyclohexane

Figure B3 cont'd

Company	Location	Feedstock	Major Products
Nueces County cont'd			
Coastal States Petrochemical Co.	Corpus Christi	Crude oil	Toluene, benzene
Suntide Refining Co.	Corpus Christi	Refinery streams	Paraxylene, cumene
Cameron County			
Union Carbide Corp.	Brownsville	Butane	Acetic Acid

NA means not available

Source: *International Petroleum Encyclopedia.* (Tulsa, Oklahoma: Petroleum Publishing Co., 1976).

APPENDIX C

ENVIRONMENTAL DATA BASE AND DATA EVALUATION

Natural Hazards Map No. 1

Data Sources

1. Brown, L. F., R. A. Morton, J. H. McGowen, C. W. Kreitler, and W. L. Fisher. 1974. *Natural Hazards of the Texas Coastal Zone.* Austin, Texas: University of Texas, Bureau of Economic Geology.

2. Brown, L. F., project coordinator. Data varies. *Environmental Geologic Atlas of the Texas Coastal Zone.* Austin, Texas: University of Texas, Bureau of Economic Geology.

3. Seadock, Inc. 1974. *Environmental Report.* 3 vols. Texas Offshore Unloading Facility.

4. Kreitler, C. W. 1976. *Lineations and Faults in the Texas Coastal Zone.* Austin, Texas: University of Texas, Bureau of Economic Geology.

5. Rice Center for Community Design and Research, *Texas Gulf Coast Research Report No. 1.* Rice University. 1976.

6. Lanver Engineers, 100 Year Flood Prone Areas in Brazoria County, Lanver Engineers, Houston, Texas.

7. Texas Water Development Board. 1973. *Groundwater Resources of Brazoria County, Report 163.*

Evaluation of Data

Maps of subsidence, structural lineations, faulting, and hurricane surge flooding are presented in a regional inventory using scales 1:24,000 (6), 1:250,000 (1,2), 1:750,000 (4), and 1:1,000,000 (5). The first two and sixth references serve as the main data base, having the best detail.

Lineations and Faults locates many surface expressions of structural faults in the subsurface, augmenting the *Natural Hazards'* lineations. The Seadock report adds one growth fault observed at their proposed onshore site. It is likely that other faults and lineations are present in the study area, of such size and extent that they were not mapped or observed.

The first two references indicate the extent of flooding by hurricanes Beulah and Carla. The Seadock report indicates flooding resulting from Hurricane Celia was comparable to that of Beulah, and also that in some areas the Carla floods approximate the extent of a major 100 year frequency flood. The accuracy of flooding data is suitable as a predictive tool, given the background potential for varying floods in the future. *Gulf Coast Research Report* cites probabilities for such degrees of major storms and their related flooding based upon the number of storms landing on a given portion of the Texas coast between 1901 and 1973. Lanver Engineers map 100 year flood heights for both hurricane and riverine flooding.

Finally, *Natural Hazards* delineates two degrees of subsidence in the study area: 0.2 to 1.0 feet and 1.0 to 5.0 feet since 1930. Only the latter degree is mapped here. All the remaining area of the study site is shown by BEG to have subsided 0.2 to 1.0 feet. The extent of subsidence within this area increases toward the Houston area. Some areas may have experienced less than 0.5 feet or even negligible subsidence. Small, local subsidence has occurred around all of the oil fields.

Basis of Weighting Data Elements as Constraints

Identified relevant constraints to the project location and design include both avoiding hazardous areas and also minimizing adding to hazard susceptibility. Therefore, for example, a high constraining weight would be applied to areas likely to be flooded. A 5 foot hurricane flood (Beulah-Celia level) was given higher weight than that of a 100 year (Carla) flood as the former is more likely to be repeated in extent or severity. The 100-year flood prone areas are also highly constrained.

By locating away from the major areas of subsidence, any extensive groundwater withdrawal by the project's industries will more evenly spread the effect of reservoir dehydrations, and therefore tend not to exacerbate current subsidence problems.

Fault expressions and apparent lineations are narrow features not amenable to scaled weights of constraint. The area of influence of an active fault may be on the order of 20 to 65 feet to either side of the structure.

Substrates, Soils, and Aquifers

Data Sources

1. Brown, L. F., project coordinator. Date varies. *Environmental Geologic Atlas of the Texas Coastal Zone.* Austin: University of Texas, Bureau of Economic Geology.

2. U.S.D.A. Soil Conservation Service. *General Soil Map of Brazoria County.* 1970.

3. Ibid., Soil Series Description files, Brazoria County SCS Field Office, Angleton, Texas.

Evaluation of Data

The Bureau of Economic Geology (BEG) physical properties maps were "derived from basic map units on the environmental geology map" by applying quantitative test data to the areally defined and mapped environmental geologic units. The physical properties maps are designed to provide regional data for a variety of uses applicable both to the surface and to depth of approximately 60 feet. The resulting map characterization is however qualitative. The map units and their capability evaluations cannot be substituted for specific site testing and evaluation but can be used to rate large tracts of land for a particular use.

Superimposed on the subsurface substrates are soil associations, limited in depth and accuracy as the distribution of soil series and soil types within a given association is not presented. Figure C1 shows SCS interpretations of series limitations.

Basis of Weighting Data Elements as Constraints

The constraints on the project design related to substrate characteristics primarily include preferential location on stable substrates for the plant site, maximizing excavatability, and minimizing disruption of shallow water table groundwater. The latter constraint would require low percolation and permeability, and is to a great extent a factor of soil characteristics. The substrate suitability on this map is in terms of foundation suitability and excavatability, as derived from BEG physical properties maps.

The basis for assigning relative constraint weight to the substrate units is the BEG analysis of capability/suitability. Three degrees of weighting are presented here. Substrate groups characterized by very low permeability, very poor drainage, depressed relief, low shear strength, very poor load-bearing strength, high plasticity, and high water-holding capacity (BEG groups IV and V) are weighted as most constraining, being unsatisfactory for most project requirements. Dominantly silty clay substrates (BEG group I) are given a lesser constraining weight, for although such substrates are

Soil Series	Setting/ Characteristics	SANITARY FACILITIES					COMMUNITY DEVELOPMENT			SOURCE MATERIAL			WATER MANAGEMENT		
		Septic Tank Absorption Field	Sewage Lagoon Areas	Sanitation Landfill (Trench)	Sanitation Landfill (Area)	Daily Cover for Landfill	Shallow Excavations	Dwellings	Local Streets & Roads	Road-fill	Sand	Top-soil	Pond Reservoir Area	Embankments, Dikes, Levees	Drainage
Pledger	level high flood plains calcareous clayey	severe 13/24/	severe 11/24/	severe 21/24/	severe 24/1	poor 21/	severe 11/21/24/	severe 11/17/24/	severe 12/17/	poor 12/17/	unsuited 6/	poor 21/	slight 12	moderate 12/	poor 12/24/
Miller	nearly level floodplains clayey, fine/mixed	severe 11/13/	severe 11/	severe 11/21	severe 11/	poor 21/26/	severe 11/21/	severe 11/12/17/	severe 12/17/	poor 12/17/	unsuited 6/	fair to poor 20/ 21/	slight	moderate 23/17/27/	moderate 8/13/
Harris	level coastal marshland montmorillonitic/saline	severe 13/11/24/	severe 11/25/24/	severe 24/11/21/	severe 11/24/	poor 21/24/	Severe 24/21/11/	severe 24/11/12/	severe 11/12/24/	poor 24/21/17/	unsuited	poor 24/21/8	slight	moderate 23/12/	poor 24/11/13/
Morey	upland depressional areas silt loam over silt clay	severe 24/13/	severe 24/1	severe 21/24/	severe 24/	severe 24/	severe 21/24/	severe 24/	severe 12/24/	poor 12/24/	unsuited	poor 24/	slight	moderate 5/18/14/23/	poor 13/24/
Clodine	coastal prairie coarse siliceous loam	severe 13/24/	severe 24/1	severe 24/	severe 24/	poor 24/	severe 24/	severe 24/	severe 24/	poor 24/	unsuited 6/	poor 24/	slight	moderate 14/27/	poor 13/
Lake Charles	upland montmorillonitic	severe 13/24	depending on % slope:0-2,slight; 2-7,mod.;7-8,sev.	severe 21/24	severe 24/	poor 21/	severe 21/24	severe 12/17/24	severe 12/17	poor 12/17	unsuited 6/	poor 21/	slight	moderate 12/23	poor 13/24
Bernard	coastal prairie montmorillonitic	severe 13/24	moderate 25/	severe 21/24	severe 24/	poor 21/	severe 21/24	severe 12/17/24	severe 12/17	poor 12/17	unsuited	poor 21/	slight	moderate 12/23	poor 13/
Norwood	nearly level bottomland fine silty, mixed calcareous	light to severe 11/	moderate 16/18/ severe 11/	moderate to severe 11/	mod. to severe 11/	good to fair 21/	moderate to severe 11/	severe 11/	moderate to severe 12/11	moderate to severe 12/	unsuited 6/	good to fair 21/	moderate 16/	moderate erodes easily	not needed
Asa	floodplain stratified loam	rare: moderate 11/ occasional: severe 11/	rare:Moderate 16/, occasional: severe 11/	rare: mod. 11/, occasional severe 11/	rare:mod. 11/, occasional severe 11/	fair 21/	Rare:moderate 11/, occasional severe 11/	rare:severe 11/,occasional: severe 11/	moderate 12/	fair 12/	unsuited 6/	unsuited 6/	moderate 16/	moderate 14/ erodes easily	not needed
Veston	coastal flats & convex ridges silt loam	severe 11/24/	severe 11/24/	severe 11/24	severe 11/24/	poor 24/	severe 11/24/	severe 11/24/	severe 11/24	poor 24/	unsuited 6/	poor - 24/8/	slight	moderate 12/	11/24/8/

1/ Area Reclaim - Borrow areas are difficult to reclaim, and revegetation and erosion control on these areas are extremely difficult.
5/ Dusty - Soil particles detach easily and cause dust.
6/ Excess Fines - The soil contains too much silt and clay for use as gravel or sand in construction.
8/ Excess Salt - The amount of soluble salt in the soil is so high that it restricts the growth of most plants.
11/ Floods - Soil temporarily flooded by stream overflow, runoff, or high tides.
12/ Low Strength - The soil has inadequate strength to support loads.
13/ Percs Slowly - Water moves through the soil slowly, affecting the specified use.
14/ Piping - The soil is susceptible to the formation of tunnels or pipelike cavaties by moving water.
16/ Seepage - Water moves through the soil so quickly that it affects the specified use.
17/ Shrink-Swell - The soil expands on wetting and shrinks on drying, which may cause damage to roads, dams, building foundations, and other structures.
18/ Slope - Slope too great.
20/Thin Layer - Suitable soil material is not thick enough for use as borrow material or topsoil.
21/ Too Clayee - Soil slippery and sticky when wet and slow to dry.
23/ Unstable Fill - Banks of fill are likely to cave in or slough.
24/ Wetness - Soil wet during period of use.
25/ Excess Humus
26/ Hard to pack
27/ Compressible

Figure C1

Soil Interpretations for Selected Uses, Limitations and Suitabilities

unsatisfactory as foundation bases, they are favorable in terms of excavatability, solid waste disposal, and for retaining ponds. The dominantly silty or clayey sand substrates (BEG group III) are presented here as least constraining, being favorable for most project requirements including foundation support, fill material, and levee construction.

Ecosystems Map No. 3

Data Source

1. Texas Coastal Management Program, unpublished ecosystems maps adapted from BEG biological assemblages maps.

2. Brown, L. F., Jr., project coordinator. Date varies. *Environmental Geologic Atlas of the Texas Coastal Zone.* Austin: University of Texas, Bureau of Economic Geology.

3. Seadock, Inc. 1974. *Environmental Report.* 3 vols. Texas Offshore Unloading Facility.

4. Bureau of Economic Geology. 1975. 1:30,000 Color Infra-Red Aerial photographs. 1975.

5. Texas Coastal Management Program unpublished current land use map (1:125,000).

Evaluation of Data

Accuracy is best for wetlands areas, poorer in depth for upland coastal plain and wooded ecosystems. The boundary between brackish water marsh and upland coastal plain varies to some extent year by year. The Coastal Management Program ecosystem maps were used to define a boundary line for this gradational change. The Seadock Environmental Report distinguishes a shrub-savannah community from a Gulf cordgrass prairie community between the Brazos and San Bernard Rivers. The boundary between these communities may be transitional or abrupt. Color infra-red photographs were used as an interpretive tool in separating the shrub-savannah community from a composite "prairie" ecosystem in other areas. The precision and accuracy of this interpretation may, in locations of the study area, be considerably weak.

Basis of Weighting Data Elements as Constraints

Important constraints on the project design include minimizing disruption of wildlife habitat in general and minimizing disruption of productive wetlands areas in particular. The relative ranking of weights is based upon weights used in the Minnesota Power and Light Transmission Project, and in *A Procedure for Location of a Least Impact Corridor* by Texas Tech University. This project team's evaluation resulted in the following relative importance of ecosystems as constraints, in descending order of importance: brackish-water marsh, fluvial woodlands, inland fresh-water marsh, Gulf cordgrass prairie, and shrub-savannah ecosystems. The ranking reflects the factors of importance of biological productivity, essential habitat and the need for conservation.

Wildlife Map No. 4

Data Sources

1. Texas Parks and Wildlife Department. Comprehensive Planning Branch. 1975. *Regional Environmental Analysis of the Houston-Galveston Region.* Texas Outdoor Recreation Plan. Vol. 6.

2. Seadock, Inc. 1974. *Environmental Report.* 3 vols. Texas Offshore Unloading Facility.

Evaluation of Data

Only game animals and endangered species not specifically appearing in the ecosystems description for their respective habitat are presented on this map. The species presented were selected by the project team with consultation with officials of Texas Parks and Wildlife Department. They are assumed to represent the main wildlife of importance not inherently covered in the ecosystem descriptions used as the base of Map No. 3-Ecosystems. Species included on the lists of the Texas Organization of Endangered Species which are found in the study area are: *Uniola paniculata* (sea oats), *Spartina alterniflora* (smooth cordgrass), and *Juglans nigra* (black walnut). The data is such that the distribution and abundance of these species cannot be mapped with meaningful depth and accuracy.

Basis of Weighting Data Elements as Constraints

Constraints upon the project design include minimizing disruption of wildlife habitat, migration routes, and feeding zones and avoiding rare and endangered species habitat and rookeries. Other constraints are more applicable to the data set presented on Map No. 3-Ecosystems.

The data presented in terms of wildlife density or levels of usage is readily converted to relative weightings, with the denser habitat areas being more constraining. Endangered species range or occurrence may be given a higher weight than, in general, the weight assigned to the other wildlife. No attempt has been made, however, to compare weights between ducks, geese, and deer.

Land Use Map No. 5

Data Source

1. Brown, L. F., Jr., project coordinator. Date varies. *Environmental Geologic Atlas of the Texas Coastal Zone.* Austin: University of Texas. Bureau of Economic Geology.

2. Texas Coastal Management Program, Current land use. Unpublished map developed from RB-57 color infra-red photographs (1:125,000). 1975.

3. Texas General Land Office. 1975. Color infra-red aerial photographs 1:60,000 scale.

4. Texas Parks and Wildlife Department. Comprehensive Planning Branch. 1975. *Regional Environmental Analysis of the Houston-Galveston Region.* Texas Outdoor Recreation Plan Vol. 6.

Evaluation of Data

The data is considered to be generally accurate as of 1975. Some area of rangeland may change cyclically to cropland, depending upon market incentives. The Coastal Management Program maps were used as main data base. The BEG data was used to identify current land use trends. The color infra-red photos were consulted to resolve conflicts between sources about land use, especially discriminating industrial from urban areas. The precision of the residential delineations in rural, unincorporated areas may not closely follow housing density patterns, but in general represents the community boundaries as presently perceived and as may be expected in the future (see, for example, TPWD *Regional Environmental Analysis*).

Basis for Weighting Data Elements as Constraints

Project constraints on land use conversion include minimizing disruption of existing and projected human settlement, minimizing disruption of productive agricultural areas, and minimizing visual impact.

The constraint weighting adopted here is based on the project team's evaluation of factors such as relative land costs, political pressures, priority ownership, and apparent value to the region

as a whole. Therefore, the project's industrial park is constrained away from state property and major residential-industrial-urban developments. Wooded areas are given the next highest weight, representing their limited occurrence in the project study area, their visual appeal, and their status as diminishing under development pressure. Rangeland areas which were found to alternate with crop production were given a higher weight than range solely used as grazing areas. Brackish-water marsh areas are not here defined as a developed land use, and hence weighting is inapplicable. Such areas are evaluated as a constraining resource on Ecosystems Map No. 3.

Transportation, Mineral Resources, and Archeology Map No. 6

Data Source

1. Brown, L. F., Jr. project coordinator. Date varies. *Environmental Geologic Map of the Texas Coastal Zone.* Austin; University of Texas. Bureau of Economic Geology.

2. Sandeen, W. M. and J. B. Wesselman. 1973. *Groundwater Resources of Brazoria County.* TWDB Report 163.

3. Texas Parks and Wildlife Department. Comprehensive Planning Branch. 1976. *Regional Environmental Analysis of the Houston-Galveston Region.* Texas Outdoor Recreation Plan Vol. 6.

4. Texas Archeological Survey. 1977. Archeological sites data files, Balcones Research Center, Austin.

Evaluation of Data

Depth, accuracy, and precision is good for roads, railroads, major pipelines and powerlines, water wells, sand quarries, oilfields, and discovered historical/archeological sites. Small feeder pipelines and feeder transmission lines are not located. Undiscovered archeological sites are, of course, not mapped. Telephone and other above ground wire-lines are not mapped.

Basis for Weighting Data Elements as Constraints

The miscellaneous collection of developments on this map pose constraints related to the project siting including minimal relocation of railroads, roads, and other transmission lines, minimize disruption of historical/archeological sites, and maximizing the use of existing highway and railroad access and rights-of-way, and minimizing disruption of minerals extraction potential. These features, to an extent, are all-or-none variables. Therefore, it is sufficient to plot their locations. The project canal routing is constrained to cross the least number of such features, minimizing relocation. The industrial park will be attracted to a position accessible to major transportation networks.

APPENDIX D

THE BRAZORIA COUNTY INPUT/OUTPUT MODEL*

The direct effects of the canal construction, that is, the direct employment requirements and income received, can be calculated on the basis of the construction activities postulated to take place. Those effects, however, present only part of the total impact picture; indirect effects must also be calculated. The determination of these indirect effects (indirect employment in subsidiary activities generated by primary construction activities, and taxes paid by these subsidiary activities are just a few examples) is a more complex problem than calculation of primary effects.

These indirect and induced effects (referred to throughout this study simply as "indirect" effects) are calculated through the use of an input/output model. An input/output analysis (sometimes referred to as inter-industry analysis) is especially suited to the calculation of indirect effects because of these important features of an input/output model:

1. It can be used to systematically describe a regional economy through the use of equations which represent the trading patterns of the area;

2. It is capable of inter-relating economic and natural resource (water use) data; and

3. The model can be used to estimate future economic activity.

Because of the time and money constraints, the use of an input/output model in this study would have undoubtedly been impossible if an I/O Model for the State of Texas did not exist. Such a model has been developed, however, and has been augmented from time to time by several sub-regional (intra-state) models based on the original state model.

The first state model was developed by the Office of the Governor of Texas in 1973 and has since been updated to incorporate 1972 U.S. Department of Commerce data. This state model was the starting point from which the Brazoria County Input/Output Model was constructed. It was necessary to modify the state model, however, to facilitate analysis of Brazoria County, the region relevant in this study.

This appendix has as its purpose, therefore, an explication of precisely how this modification was achieved and, thus, how the Brazoria County Model was constructed. Included herein is a brief description of I/O analysis generally and the Texas I/O Model specifically, the subregional modification of the state model, and the internal operating characteristics of the Brazoria County model.

Input/Output Analysis*

In its essence, an I/O Model is an accounting system which traces the flow of goods and services throughout a regional economy. In such a model, each producing entity is treated as both a

*The Brazoria County I/O Model was developed as part of the Study *Offshore Oil: Its Impact on Texas Communities*, prepared for the General Land Office of Texas by RPC, Inc., June, 1977. As a result, this appendix was adapted from Appendix E (Vol. IV) of that report.

producer and as a consumer, in that it consumes resources necessary for production. Those entities which consume only, of course, are treated simply as consumers. (A mathematical description of input/output analysis can be found in Appendix D1).

An input-output model is presented in matrix form and consists of three tables:

1. The transactions table is the basic table of an input-output model. Essentially, it is a description of sales and purchases for all sectors in the regional economy. Figure D1 is a hypothetical example of an input-output transactions table.

Figure D1
Transactions Table

Sales / Purchases	Sector	Agriculture	Manufacturing	Trades	Final Demand Households	Total Output
	Agriculture	$ 30	$ 70	$ 50	$ 30	$180
	Manufacturing	50	60	50	30	190
	Trades	40	30	60	50	180
Final Payments	Households	60	30	20	50	160
	Total Inputs	180	190	180	160	710

The transactions table consists of the processing or endogenous sectors (agriculture, manufacturing, trades, etc.) plus the final demand or exogenous sectors (households, exports, government, capital formation, and final payments sectors), and imports, gross savings, and depreciation. The processing sectors produce goods and services which are used as inputs by other industries and which are also sold to the ultimate consumer in the final demand sector. Row entries represent a sale by any given sector to another sector. Column entries represent a sale by any given sector to another sector. Column entries represent a purchase by any given sector from another sector. The flor of goods and services is continued throughout the model, since the model employs a double entry accounting system whereby a sale by one sector is purchased by another sector. Finally, the sum of all outputs is equal to $710 (in Figure D1) in a balanced model which accounts for all transactions.

2. The direct requirements table is a matrix of technical coefficients which show the amount of input needed from each sector to produce a dollar of output for any given sector. Technical coefficients are derived for processing sectors by dividing each column entry by the sum of the column. Figure D2 is an example of an input/output direct requirements table. For example, the coefficients for agriculture show that in order to produce a dollar of output, the agriculture sector would require 17 cents of inputs from other agriculture businesses, 28 cents from manufacturing, 22 cents from the trade sectors and would pay 33 cents to households for labor.

Figure D2
Direct Requirements Table

Sector	Agriculture	Manufacturing	Trades	Households
Agriculture	.1667	.3684	.2778	.1875
Manufacturing	.2778	.3158	.2778	.1875
Trades	.2222	.1579	.3333	.3125
Households	.3333	.1579	.1111	.3125
Total Inputs	1.0000	1.0000	1.0000	1.0000

*This section was taken from the report, "Coastal Economy" written by RPC, Inc., under contract to the General Land Office of Texas, 1975.

3. Interdependence coefficients from the direct and indirect requirements table show the interrelations of the input of a sector to the outputs of all other sectors both directly and indirectly. These coefficients are important because they show not only the direct effect of a trade between two sectors but also the indirect effect on the economy that is created by the initial transaction. For this reason, the numerical value of these coefficients are larger than the direct requirements coefficients. Figure D3 is a hypothetical example of a direct and indirect requirements table.

Figure D3
Direct and Indirect Requirements Table

Sector	Agriculture	Manufacturing	Trades
Agriculture	2.0805	1.4607	1.4755
Manufacturing	1.2461	2.4919	1.5576
Trades	.9885	1.0770	2.3606
Multiplier	4.3151	5.0296	5.3927

The direct and indirect requirements table presents a more detailed explanation of the interrelations among all sectors in the model to any given sector than does the transactions table or the direct requirements table. The interdependence matrix can also be extended to include the households row and column in the calculations; the same procedure is used, but the induced effects of households' spending are included in the interdependence matrix. This table also includes "multipliers" that can be used in predicting the total economic impact in an area based on a known change in the economy. The summation of each column is a multiplier that can be used as an integral part of impact analysis. By incorporating employment and natural resource data into the model, multipliers can be calculated that show not only the income effect but the socio-economic impact on a regional economy.

Sub-Regional Modification of the State Model

The Brazoria County Model, as was noted earlier, was based on the Texas State Input/Output Model. The initial step in developing the regional model was to estimate the total value of output (control totals) for each sector in the model for Brazoria County. This information at the county level is available from a variety of sources, including the U.S. Department of Commerce. When the value of output was not available or when it was available only at the state level, Texas Employment Commission data were used to estimate the regional totals. For example, total value of output for the construction industry is available at only the state level from the 1972 U.S. Census of Construction. In order to estimate the regional totals, a ratio of construction employment in the region to construction employment in the state was derived and applied to the state total value of output.

Let: $$\text{Rshare} = \frac{\text{RempCn}}{\text{SempCn}} \times \text{T.V.O. State}$$

Where: Rshare = regional share of total value of output in construction;

RempCn = employment in construction in region;

SempCn = employment in construction in state; and

T.V.O. State = total value of output in construction State of Texas.

The following list shows the data sources that were used in estimating the control totals for the regional model.

Agriculture	Publications from Texas Department of Agriculture and the USDA; Texas Crop and Livestock Reporting Services.
Mining	Published and unpublished data from Texas Railroad Commission and Texas Employment Commission; *Mineral Yearbook; 1972 Census of Mineral Industries.*
Construction	Texas Employment Commission, unpublished data; *1972 Census of Construction.*
Manufacturing	*1972 Census of Manufacturing.*
Transportation	Texas Employment Commission, unpublished data.
Communications	Texas Employment Commission, unpublished data.
Utilities	Electric utilities from Texas Employment Commission, unpublished data; Water utilities from *1972 Census of Governments;* Gas utilities from Texas Railroad Commission.
Wholesale Trade	*1972 Census of Wholesale Trade.*
Retail Trade	*1972 Census of Retail Trade.*
Finance, Insurance, Real Estate	Texas Employment Commission, unpublished data.
Services	1972 Census of Selected Services; Texas Employment Commission unpublished data; Texas Education Agency.
Households	1972 Department of Commerce, *Survey of Current Business,* 1972 and 1973.
Federal Government	*1972* and *1973 Federal Outlays in Texas.*
State Government	Published data from the Governor's Office of Budget and Planning.
Local Government	*1972 Census of Governments.*

Control total data for each regional sector were run in computer program LOQUOT to construct the regional input-output models. Program LOQUOT provides a new input-output model for a sub-region based on a comparison with an existing model for a larger region. The state model was used as the base model in developing the regional model.

Internal Operating Characteristics of the Brazoria County Model

Some of the most valuable "tools" developed in an input-output model are the various multipliers that can be used in regional impact analysis. These multipliers are used to estimate changes in the level of income, employment, tax, or natural resources based on a changing economy. Multipliers of this type were developed for the Brazoria County I/O model. One of the most useful of these is the tax multiplier. Tax multipliers were calculated in the model to determine the relationship between federal, state, and local government revenues and the production levels of each industry. Specifically, tax multipliers measure the direct, indirect, and induced effects on federal, state, and local tax revenue resulting from a change in a given industry's sales of goods and services to final users.* They are used to measure the *total* tax effect as a result of an industry's sales to a final user.

*Perrin, John S. "Output Multipliers in Input-Output Analysis," Office of the Governor, Austin, Texas, August, 1972.

In general, tax multipliers can be of assistance to public and private officials in measuring the impact on public services as a result of a change in the economy. For example, assume that a new manufacturing plant is to be built in a community and the company estimates that total sales of the first year are expected to be x million dollars. By using the tax multipliers in the input-output model for this manufacturing sector, the potential increase in federal, state, and local taxes can be estimated. This information can be weighted against the public cost of locating the new plant, such as installing new public utility lines or increased demands on government services to estimate the first year's benefits (or cost) to the local government. Also, new state and federal tax revenues can be estimated to determine the increase in total exogenous taxes paid by the local area. This information can be very useful to public and private planners in providing for the orderly management of a local, state, or federal government.

The tax effects relevant to a discussion of the Brazoria County model are of two types. The first type is the final demand-driven tax effect. This type of tax effect quantifies the amount of additional taxes which will be paid to any given taxing sector resulting from an increase in sales to final demand by a sector of the economy. The second type of tax effect is the output-driven tax effect resulting from an increase in production by a sector. The type of effect which is applicable in any given situation is dependent upon that situation. For example, if planners are considering steps to increase the export of a commodity, the tax effect which would be realized is the final demand type. However, if a new factory were to establish itself in a region, the tax effect of that factory would be the output-driven type.

Tax effects are computed using a direct requirements table and an interdependence coefficients table of a regional input-output model. This procedure outlines those direct, indirect, and induced effects on payments to taxes resulting from changes in either production or final demand. For purposes here, it is assumed that final demand has changed. While the computation is the same for both types, to compute the output-driven effects, each columnar element of the interdependence table must first be divided by the diagonal element in that column.

Basically, the total tax effect is composed of the direct effect (that payment to the tax sector directly by the sector whose final demand has changed), the indirect effect (that payment to the tax sector by all the other sectors of economy whose output supports the output of the original sector), and the induced effect (that payment to the tax sector by all the sectors of the economy resulting from increased purchases by households).

Mathematically, the tax effect resulting from an increase in final demand by $1.00 for a sector's output is the summation of products obtained by multiplying each value in that sector's column of the interdependence matrix by that sector's tax payment per dollar of output found in the direct requirements table.

Let A = matrix of interdependence coefficients,

$A_{i,j}$ = interdependence coefficient in the i-th row and j-th column of the matrix A,

$x_{t,i}$ = direct requirement of the i-th sector upon the tax sector 't', and

n = number of processing sectors in the regional model.

Then the total tax effect is:

$$TE_j = \sum_{i=1}^{n} (A_{i,j} \cdot x_{t,i})$$

Briefly, $A_{i,j}$ is the increase in production by sector i required to support a $1.00 increase in sales to final demand by sector j. Of that amount, sector i must pay to tax sector t and x_t ; share. Therefore, sector i pays to tax sector t an amount equal to $(A_{i,j}\ x_{t,j})$. Summing the tax effect across all sectors which must increase their production yields the total tax effect.

If the interdependence table used in the above computation excludes households (open model), then the total tax effect consists of only the direct and indirect effects. The indirect portion can be found as follows:

$$Indirect_j = TE_j - x_{t,j}$$

If the interdependence table includes households (closed model), then the total tax effect includes the induced effect which is computed as follows:

$$Induced_j = TE_j - Indirect_j - x_{t,j}$$

Besides tax multipliers, several other types of multipliers are employed in the OCSOG Model; they are briefly described below.

1. **Employment multipliers** measure the total increase or decrease in employment based on a change in employment for any given sector. For example, assume that the employment multiplier for an industry is equal to 1.75. Also, assume that employment in this industry increases by 100 workers. The total employment impact this change has on the area can be estimated by multiplying the direct change of 100 employees x 1.75. The total impact is estimated to be 175 employees including the 100 initially employed.

Employment data for each sector in the Brazoria County model were obtained in most cases from the Texas Employment Commission. The data came from unpublished sources and includes employment for all sectors exclusive of agriculture entities. Agriculture employment was estimated from unpublished sources at the Texas Water Development Board and was based on labor input coefficients for each sector. A labor input coefficient (L.I.C.) shows the amount of labor required to produce a given level of output:

$$L.I.C. = \frac{\text{Total employment in sector x}}{\text{Total value of output in sector x}}$$

2. **Type I Household Income Multipliers** measure the direct and indirect change in household income per dollar change in direct payments to households for any given sector. *Type II Household Income Multipliers* measure the direct, indirect and induced change for any given sector. For example, assume that total wage in a sector increased by $10,000 per year and the Type II income multiplier was 1.65. The total income effect this change would have on household income in the area would amount to $16,500.

3. **Final Demand Multipliers** measure the total income impact which new sales to a final consumer have on the regional economy. They are calculated for each producing sector in the model. If, for example, sales in a given sector increase by $10 million and the final demand multiplier for that sector is 2.50, the total effect on trading patterns in the area can be estimated to be $25 million.

APPENDIX D1

MATHEMATICAL EXPLANATION OF AN INPUT/OUTPUT MODEL

The derivation of the static, open input-output model consists of four basic components. These components include a transactions table; a direct requirements table; a direct and indirect requirements table; and a direct, indirect, and induced requirements table. All of these components have been covered in the text of this appendix. The following symbolic presentation is a more technical explanation of the four input-output tables.

The static, open model is based on three functional assumptions:*

1. Each group of commodities is supplied by a single production sector.

2. The inputs to each sector are a unified function of the level of output of that sector.

3. There are no external economies or diseconomies. The model assumes that demand and supply are equated through a horizontal shift in the demand function for each sector as a result of changes in the level of production in other sectors. That is, a change in the demand function for a given industry is a result of change(s) in the production levels of other industries. This means the factors of production for any given sector are stable over time, i.e., the direct requirement coefficients and technology utilized in production are constant. An assumption of this type is reasonable in the short-run, but is questionable in the long-run especially when there are significant changes in the level of production caused by technological advances.

The transactions table is a production matrix of the economy, i.e., each column in the matrix for any given sector comprises the production schedule for that sector in the statis, short-run model. For example, the cells in each column represent the inputs necessary for the total production of that sector. The economy of the study area is composed of n + 1 sectors. All of the sectors except one, final demand, are endogenous. The final demand component is an exogenous sector, that is, it is outside of the processing sectors.

Total production for any given sector is represented by the symbol X_i. Both endogenous (non-autonomous) and exogenous (autonomous) sectors consume production from all other sectors. Therefore:

$$(1)\quad X_i = X_{il} + X_{i1} + X_{i3} \ldots + X_{in} + X_f \; (i = 1 \ldots n)$$

where x_f is the autonomous sector and X_{i1}, X_{i2}, X_{i3}, X_{in} are the non-autonomous sectors.

As previously stated, the inputs to each sector are a unique function of the level of output of that sector. More specifically, the inputs purchased by each sector are a function only of the level of output of that sector, i.e., the input function is a linear homogenous function. Let X_i and X_j be non-autonomous sectors in order to illustrate the previous assumption:

$$(2)\quad X_{ij} = a_{ij}X_j$$

which shows that the demand for part of the output of one non-autonomous sector X_1 by another non-autonomous sector X_j is a unique function of X_j.

*The information in this section was basically constructed from William H. Miernyck, *The Elements of Input-Output Analysis* (New York: Random House, 1969), pp. 147-151.

By substituting equation (1) in equation (2) a more complete equation can be developed:

$$(3)\ X_i = a_{i1}\ (X_1) + a_{i2}(X_2) + a_{ia}\ (X_3) + \ldots .$$

$$\ldots\ldots a_{in}\ (X_n) + X_f\ (i=1\ldots n)$$

This equation (3) may be reduced to:

$$(4)\ X_i = \sum_{j=1}^{n} a_{ij}\ (Xj) + X_f\ (i = 1\ldots n)$$

Where X_i is the demand function for production by the jth sector from the ith sector and where X_f is the final demand (autonomous) for the output of the ith sector.

Technical coefficients or direct requirements coefficients are calculated from the transactions table by dividing each entry or cell in every column by the sum of the column. These coefficients show the amount of input needed from all sectors by the ith sector to produce one dollar's worh of output. The coefficients are calculated for the non-autonomous (endogenous) sectors only. Equation (2) may be rewritten to show the direct requirements equation:

$$(5)\ a_{ij} = \frac{X_{ij}}{X_j}$$

In order to calculate these coefficients, the inventory change column of the complete transactions model is subtracted from each sector's total gross output to obtain adjusted gross output. Then, each entry in each column of the processing sectors is divided by the adjusted gross output to obtain the technical coefficients (a_{ij}) in equation (5). The following is a matrix of technical coefficients from this equation.

$$(6)\ A = \begin{matrix} a_{11} \cdots a_{1j} \cdots a_{1n} \\ \vdots \quad \vdots \quad \vdots \\ \vdots \quad \vdots \quad \vdots \\ a_{i1} \cdots a_{ij} \cdots a_{in} \\ \vdots \quad \vdots \quad \vdots \\ \vdots \quad \vdots \quad \vdots \\ a_{n1} \cdots a_{nj} \cdots a_{nn} \end{matrix}$$

The next requirement consists of developing and inverting a Leontief matrix in order to compute the table of direct and indirect requirements per dollar of final demand. The Leontief matrix is equal to (I-A) where A is the matrix of direct requirement coefficients and I is the identity matrix. (The identity matrix is a matrix where all elements are zero except the main diagonal elements from the top left to the bottom right corner of the matrix which are equal to one.) After (I-A— is completed, the new matrix of coefficients showing direct and indirect effects is transposed to obtain $(I-A)_T$-1. This matrix (K) is as follows:

$$(7)\quad K = \begin{matrix} k_{11} \cdots k_{1j} \cdots k_{1n} \\ \vdots \quad \vdots \quad \vdots \\ k_{i1} \cdots k_{ij} \cdots k_{in} \\ \vdots \quad \vdots \quad \vdots \\ k_{n1} \cdots k_{ni} \cdots k_{nn} \end{matrix}$$

A further manipulation of the direct and indirect requirements matrix by including the households sector provides an extended analysis of the model. The same procedure used to construct the (K) matrix is followed but the model is closed with respect to the household sector. i.e., the household sector is included with the processing (endogenous) sectors. After the new matrix is inverted the coefficients show not only the direct and indirect effects by sector but also the induced income effects as a result of including the household sector in the model. This analysis further explains the interlinkages of the model and presents a more complete explanation of the total effect on the model as a result of a change in any given sector.

Input-output analysis is concerned with determining the interindustry transactions which are required to sustain a given level of final demand. The following equation is used to compute a new transactions table when a new final demand sector is inserted into the model.

$$(8)\quad \sum_{j=1}^{n} X_{fi} \times K_{if} = X_1', \text{ then}$$

$$(9)\quad a_{ij} X_1' = T'$$

where 'T' is the new transactions table.

The first equation (8) multiplies each column of $(I-A)_T^{-1}$ by the final demand of each corresponding row. The columns are summed to get a new total from output (X_i). The second equation (9) multiplies the direct requirements table times the new total gross output to obtain the new transactions table T'. The new transactions table T' is described in the new balanced equation:

$$(10)\quad X_i' = \sum_{i=1}^{n} a_{ij} (X_j') + X_f', \quad (i = 1 \ldots n)$$

As previously mentioned, this model is a static, short-run model. When changing to a dynamic, long-run model, all computational procedures remain unchanged. However, the fixed technical coefficients of the original A matrix (6) are replaced by new coefficients computed for each sector. This could be illustrated in equation (10) by changing the technical coefficient a_{ij} to a_{1j}, indicating that all components of the balanced equation have been changed in the dynamic model.

APPENDIX E

ECOLOGICAL ALTERATIONS ANALYSIS

The figures presented in this appendix comprise the analytic tools used in the ecological impact analysis. Figures E1, E2, and E3 show ecological systems diagrams of the fluvial woodland, prairie grassland, and brackish-water marsh. These diagrams indicate the flows of material and energy within and between ecological systems. A description of these processes and the components of each system are presented in Chapter IV-A-2.

The procedure for determining ecological impacts using these diagrams is also presented in Chapter IV-A-2. Figure E4 presents the analytic record of the ecological attribute alterations summarized in that chapter. The matrix (Figure E4) is indexed by ecological system (fluvial woodland, prairie grassland, or brackish-water marsh); by activity; and by the primary ecological alteration (PEA) associated with the respective activities per ecosystem. Long-term and short-term changes in ecosystem attributes are rated as either an increase or decrease in material or energy. The record also notes the probability of the impact.

Figure E1

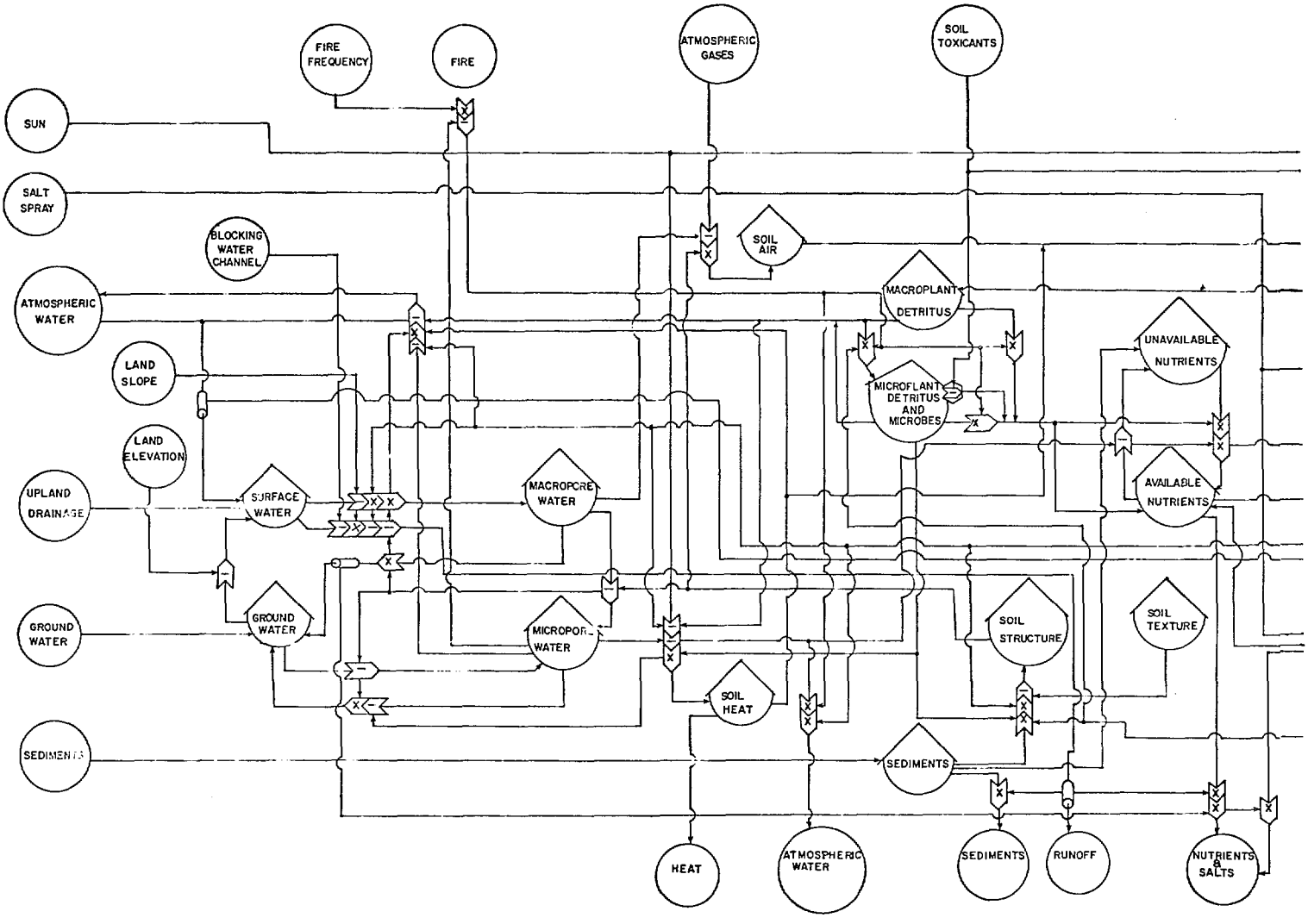
FIRE FREQUENCY
FIRE
ATMOSPHERIC GASES
SOIL TOXICANTS
SUN
SALT SPRAY
BLOCKING WATER CHANNEL
SOIL AIR
ATMOSPHERIC WATER
MACROPLANT DETRITUS
LAND SLOPE
UNAVAILABLE NUTRIENTS
MICROFLANT DETRITUS AND MICROBES
LAND ELEVATION
UPLAND DRAINAGE
SURFACE WATER
MACROPORE WATER
AVAILABLE NUTRIENTS
GROUND WATER
MICROPORE WATER
SOIL STRUCTURE
SOIL TEXTURE
SOIL HEAT
SEDIMENTS
SEDIMENTS
HEAT
ATMOSPHERIC WATER
SEDIMENTS
RUNOFF
NUTRIENTS & SALTS

Fluvial Woodland

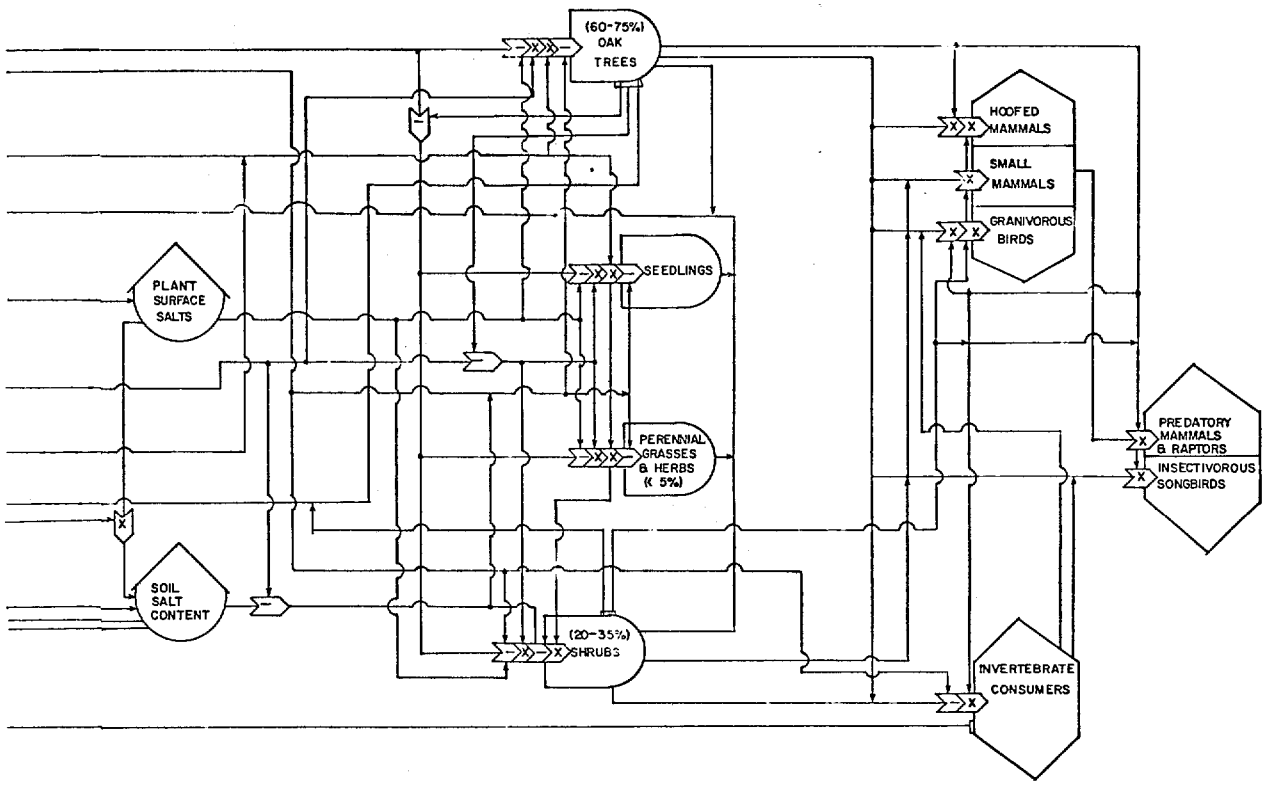

Figure E2

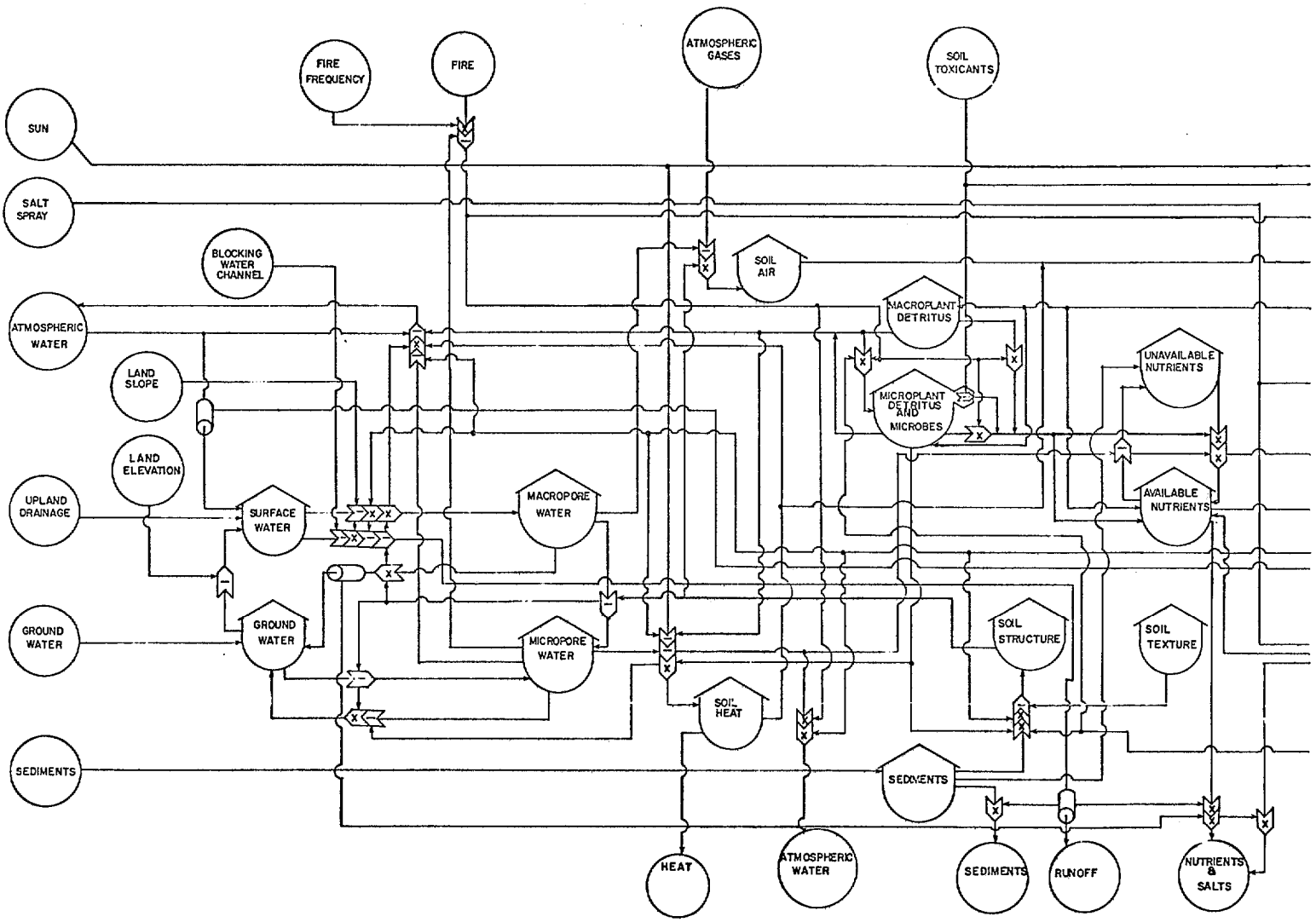
FIRE FREQUENCY
FIRE
ATMOSPHERIC GASES
SOIL TOXICANTS
SUN
SALT SPRAY
BLOCKING WATER CHANNEL
SOIL AIR
ATMOSPHERIC WATER
MACROPLANT DETRITUS
LAND SLOPE
MICROPLANT DETRITUS AND MICROBES
UNAVAILABLE NUTRIENTS
LAND ELEVATION
UPLAND DRAINAGE
SURFACE WATER
MACROPORE WATER
AVAILABLE NUTRIENTS
GROUND WATER
MICROPORE WATER
SOIL STRUCTURE
SOIL TEXTURE
SOIL HEAT
SEDIMENTS
SEDIMENTS
HEAT
ATMOSPHERIC WATER
SEDIMENTS
RUNOFF
NUTRIENTS & SALTS

Prairie Grassland

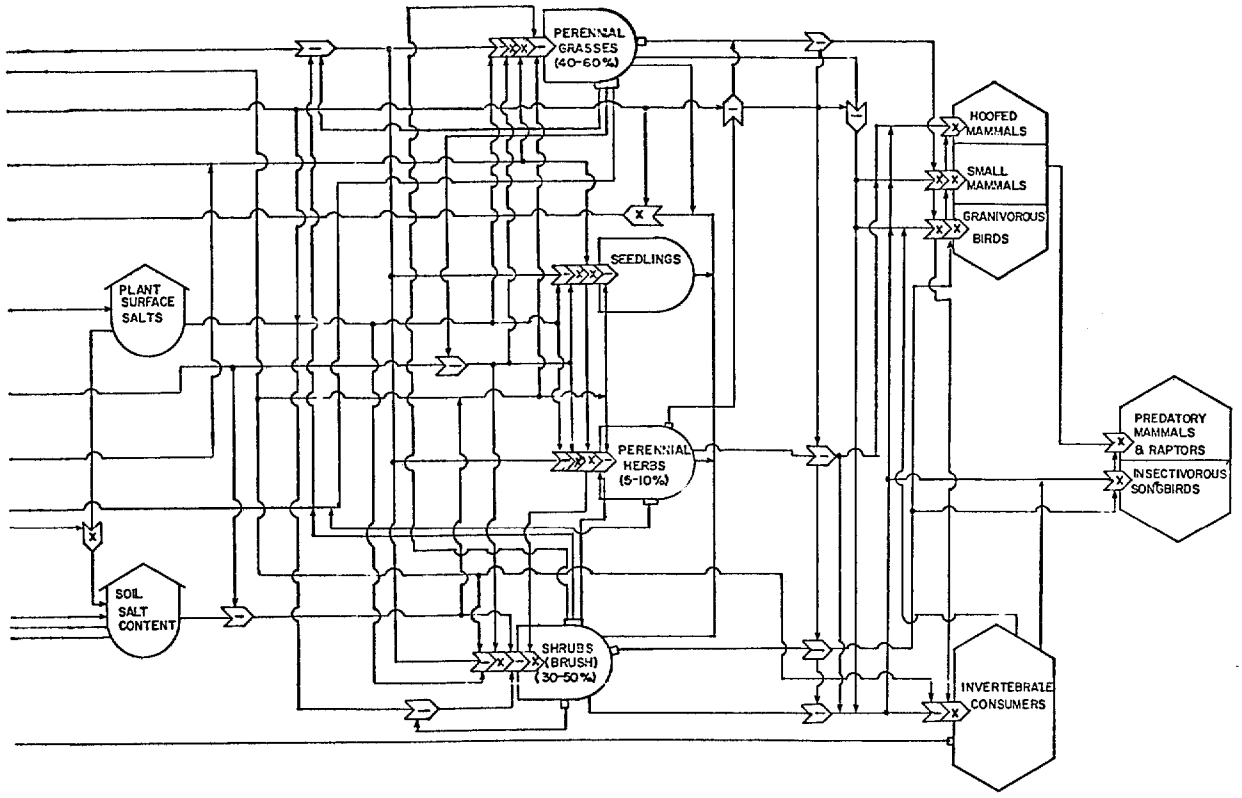

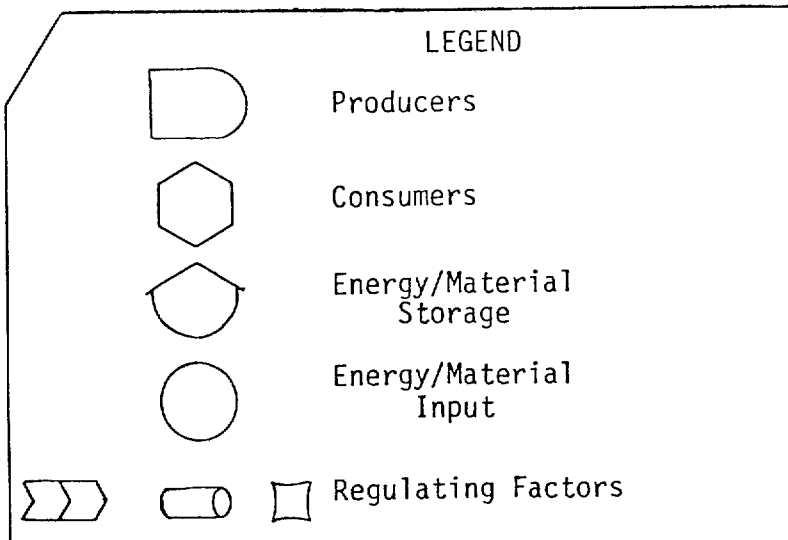

Figure E3

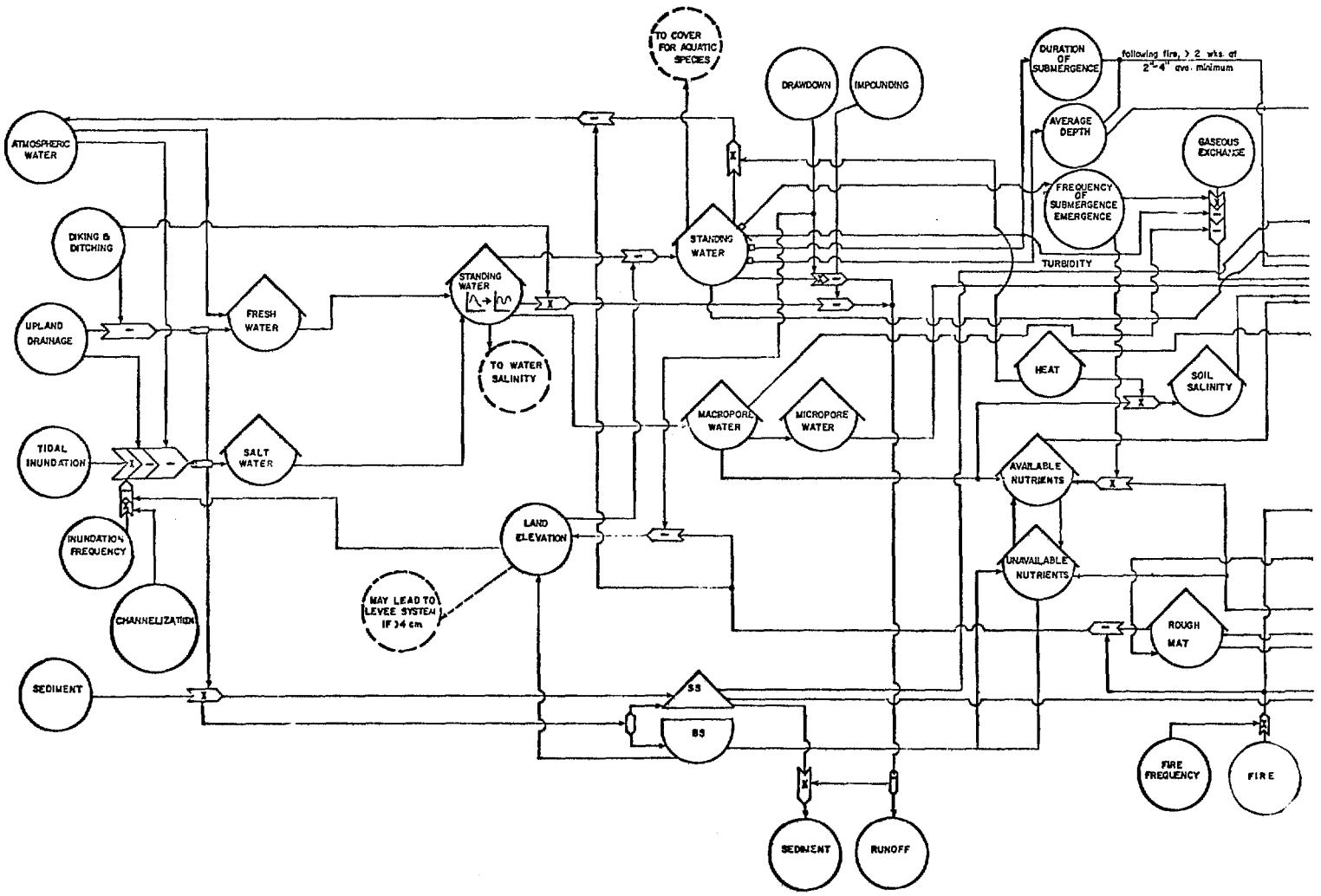
TO COVER FOR AQUATIC SPECIES
DRAWDOWN
IMPOUNDING
DURATION OF SUBMERGENCE
following fire, > 2 wks. at 2"-4" ave. minimum
AVERAGE DEPTH
GASEOUS EXCHANGE
FREQUENCY OF SUBMERGENCE EMERGENCE
ATMOSPHERIC WATER
DIKING & DITCHING
STANDING WATER
TURBIDITY
STANDING WATER
FRESH WATER
UPLAND DRAINAGE
TO WATER SALINITY
HEAT
SOIL SALINITY
MACROPORE WATER
MICROPORE WATER
TIDAL INUNDATION
SALT WATER
AVAILABLE NUTRIENTS
LAND ELEVATION
INUNDATION FREQUENCY
UNAVAILABLE NUTRIENTS
MAY LEAD TO LEVEE SYSTEM IF > 4 cm
CHANNELIZATION
ROUGH MAT
SEDIMENT
SS
BS
FIRE FREQUENCY
FIRE
SEDIMENT
RUNOFF

Brackish-Water Marsh

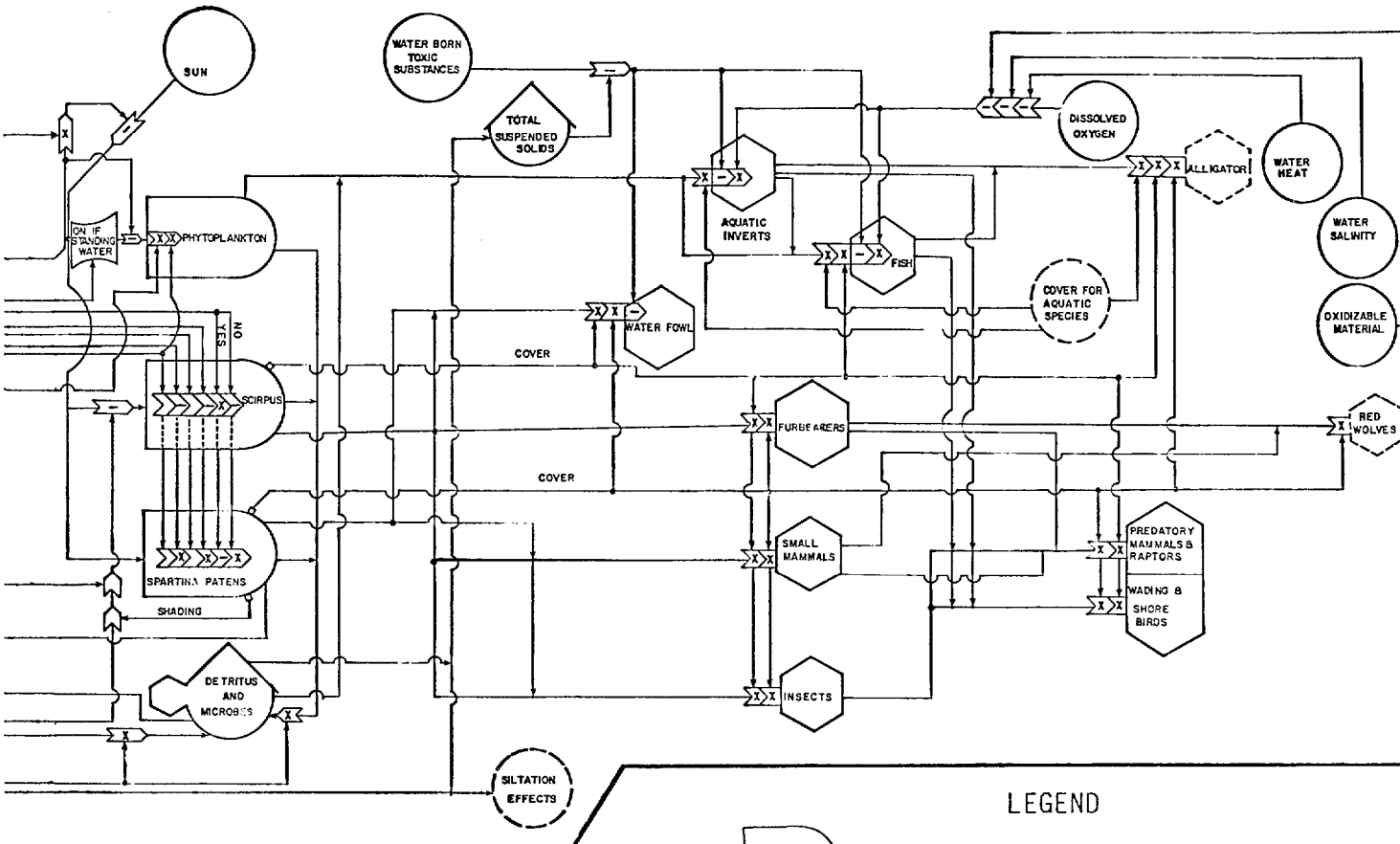

LEGEND

Producers

Consumers

Energy/Material Storage

Energy/Material Input

Regulating Factors

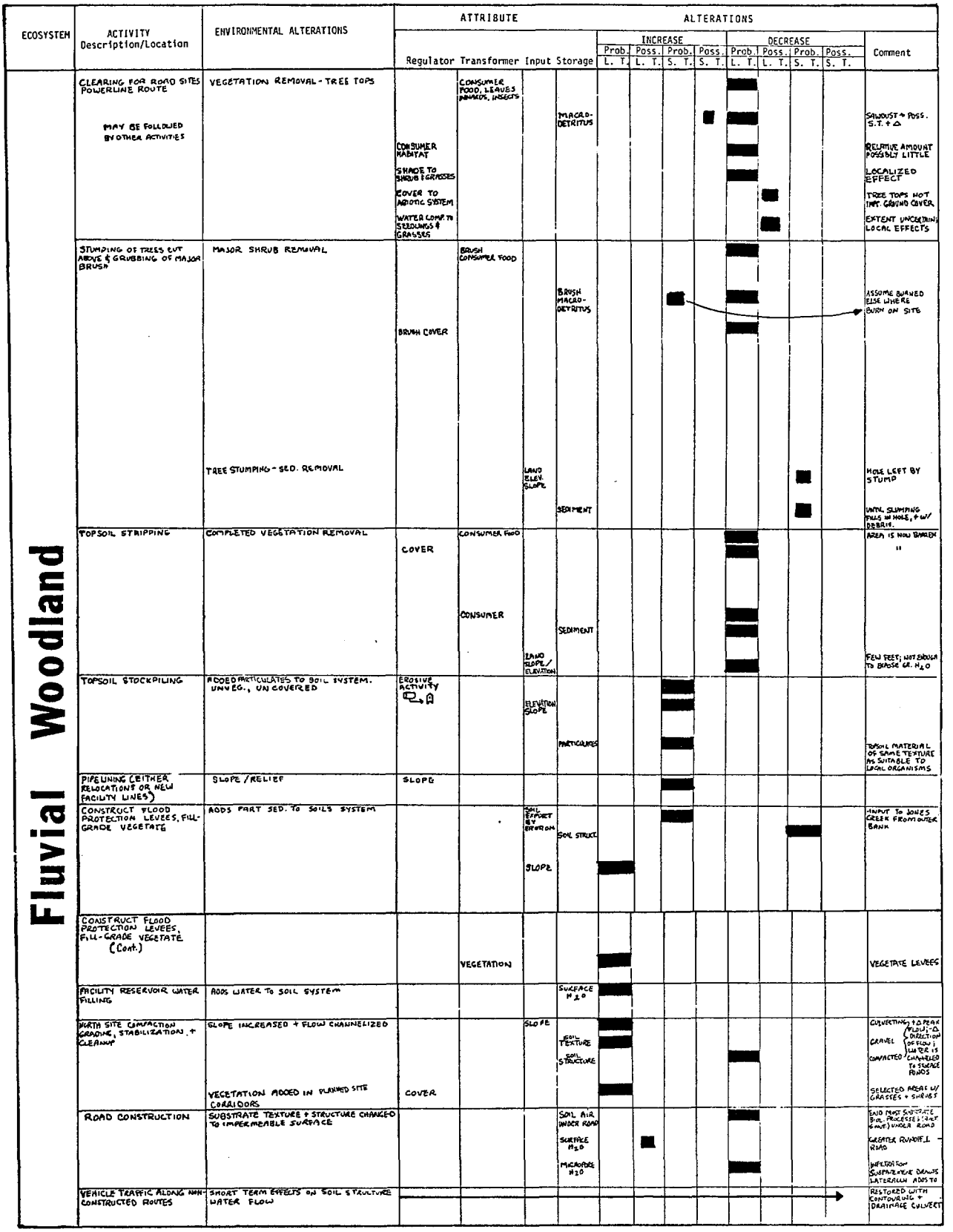

Figure E4

Record of Ecological Alterations Analysis

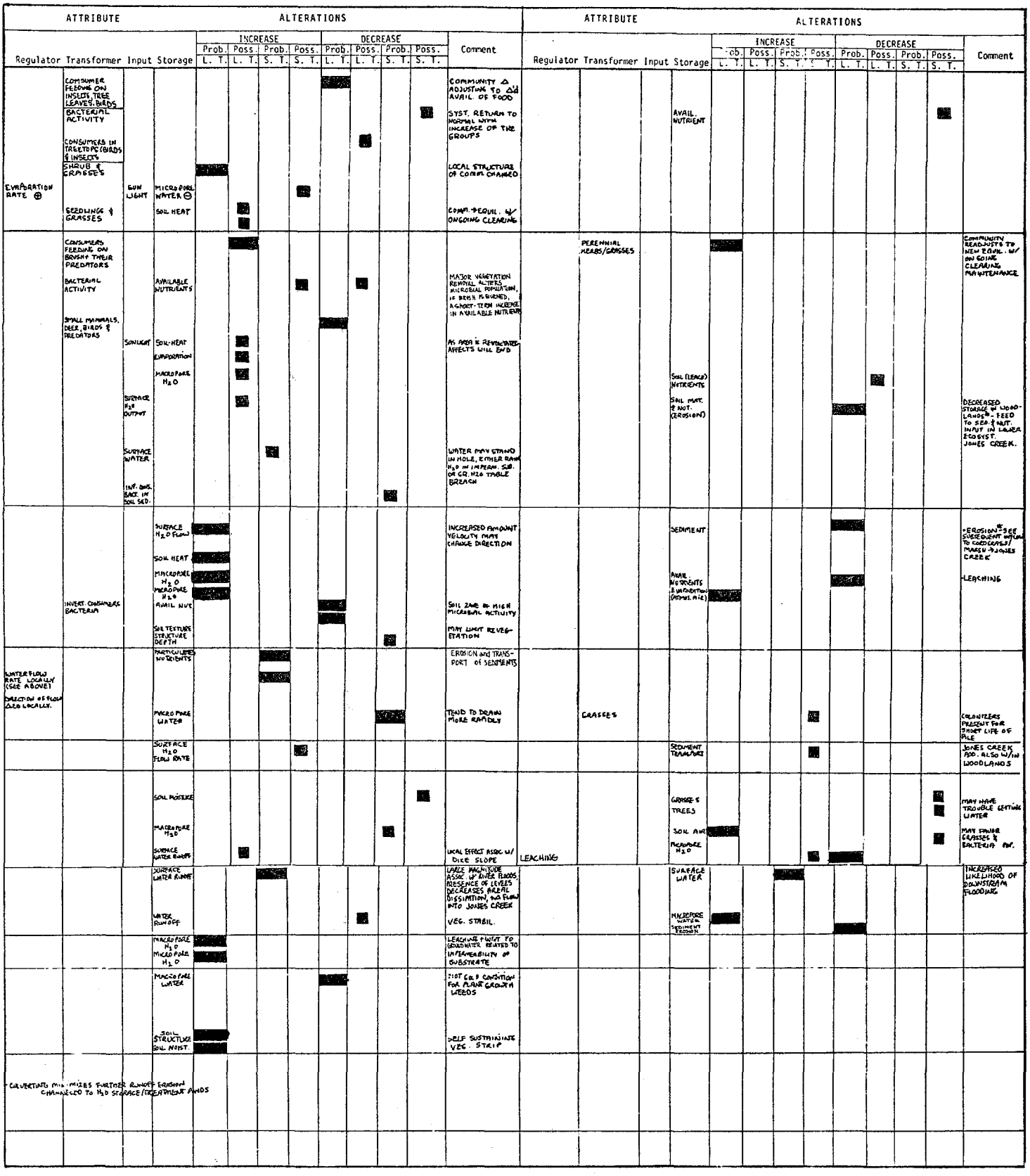

Figure E4 (cont'd)

Record of Ecological Alterations Analysis

Figure E4 (cont'd)

Record of Ecological Alterations Analysis

Prairie Grassland

ECOSYSTEM	ACTIVITY Description/Location	ENVIRONMENTAL ALTERATIONS	ATTRIBUTE: Regulator	ATTRIBUTE: Transformer	ATTRIBUTE: Input	ATTRIBUTE: Storage	ALTERATIONS: INCREASE Prob. L. T.	INCREASE Poss. L. T.	INCREASE Prob. S. T.	INCREASE Poss. S. T.	DECREASE Prob. L. T.	DECREASE Poss. L. T.	DECREASE Prob. S. T.	DECREASE Poss. S. T.	Comment
Prairie Grassland	GRUBBING/MOSTLY SW OF JONES CREEK	MAJOR SHRUB REMOVAL	COVER (BIOLOGIC SYSTEM)	BRUSH/SHRUB											
			COVER (ABIOTIC)			MACROPORE H_2O									
						H_2O RUNOFF									
						SOIL HEAT									
	TOPSOIL STRIPPING	COMPLETE VEGETATIVE REMOVAL		PRODUCTS + CONTRACTS											
		TOPSOIL REMOVAL				PARTICULATES									RICH TOPSOIL REMOVED FOR STORAGE, IN PLACES MAY BE RETURNED ⇒ NO 2 SEE IMPACTS AS ORGANISMS ARE GONE.
						DETRITUS									
						BACTERIA									
		(MOST OF AREA NOW BARREN)				SOIL STRUCTURE									EXPOSE COMP. EARTH WILL LATER DO MORE COMPACTING
			ABIOTIC COVER												
	TOPSOIL STOCKPILING (PROBABLY WEST OF JONES CREEK)	INCREASE SLOPE/RELIEF OF STOCK PILE AREA			SLOPE										
		CHANGE SOIL STRUCTURE				SED TO SOIL SYSTEM									
		ADD MATERIAL TO SOIL SYSTEM				AVAILABLE NUTRIENTS									LEACHING → LOCAL VICINITY PROBABLY SMALL AMOUNT SHORT-TERM BENEFIT TO USERS
						SOIL STRUCTURE									
	PIPELINING (BOTH RELOCATIONS + NEW PIPELINES)	RELIEF	SLOPE												
	LAND BASED EXCAVATION TO WATER TABLE DEPTH	REMOVE SEDIMENT FROM SOIL SYSTEM				SEDIMENT									TRANSFERRED TO LEVEES, FLOOD PROTECTION, SPOIL CONT.; ↑WATER STORAGE
						NUTRIENTS									
						DETRITUS									
						BACTERIA									
	LAND BASED EXCAVATION TO WATER TABLE DEPTH (CONT.)	SLOPE			SLOPE										AT EDGE OF EXCAVATED TRACT MAY BE SOME SLUMPING
		ELEVATION			ELEVATION										EXPOSE WATER TABLE
	LEVEE CONSTRUCTION	ADDED SEDIMENT TO SOIL SYSTEM				SEDIMENT									MATERIAL FROM LAND-BASED EXCAVATION FOR MOST PART
						NUTRIENT									
						DETRITUS									
						BACTERIA									
					SLOPE										
				VEGETATION											LEVEE STABILIZATION
	CANAL DIKING	ADDED PARTICULATES TO SOIL SYSTEM				SEDIMENT									MATERIAL FROM LAND-BASED EXCAVATION
						NUTRIENT									
						DETRITUS									
						BACTERIA									
					SLOPE										
						SURFACE WATER									DIRECTION OF FLOW DIVERTED: 50 → 100 TO LOWER PT. ALONG ROUTE.
		ADDED PARTICULATES TO WATER (CHANNEL)				PARTICULATES									DIKE MINIMIZED CHANNEL SILTATION
	COLLECTION OF DIVERSION OF REDFISH BAYOU	• ADDED SEDIMENTS TO WATER SYSTEM DURING DIKING + OTHER WORK				SEDIMENTS									[SEE WATER COURSE]
		• ADDED WATER TO GRASSLAND IN PONDING ASSOC. W/ DIVERSION				SURFACE H_2O INCL.									PONDING UPSTREAM
						SURFACE H_2O DEPTH									[ALLOWS AQUATIC (FW) VEGETATION
		DISCHARGE OF WATER DOWNSTREAM (RECEIVING PT. MAY HAVE MODIFICATIONS)				RATE FREQUENCY DURATION									AFFECT ON CHANNEL + MARSH *
	CHANNEL DREDGING	REMOVING PARTICULATES FROM SOIL SYSTEM				SEDIMENT									TO SPOIL CONDIMENT AREAS: TO SOUTH SITE FOR FILL
						NUTRIENTS									
						DETRITUS									
		• ELEVATION			ELEVATION										SUB AQUEOUS
		• ADDED WATER TO SOIL SYSTEM WATER HYDROLOGY				SURFACE H_2O									WITH MARINE SALTS & DISSOLVED + COLLOIDS MATERIAL [MACROPORE H_2O NOT INCREASED, BY DEFLATION BELOW WATER TABLE]
						CHANNEL TURBIDITY									MAY BE FLUSHED INTO GIWW *

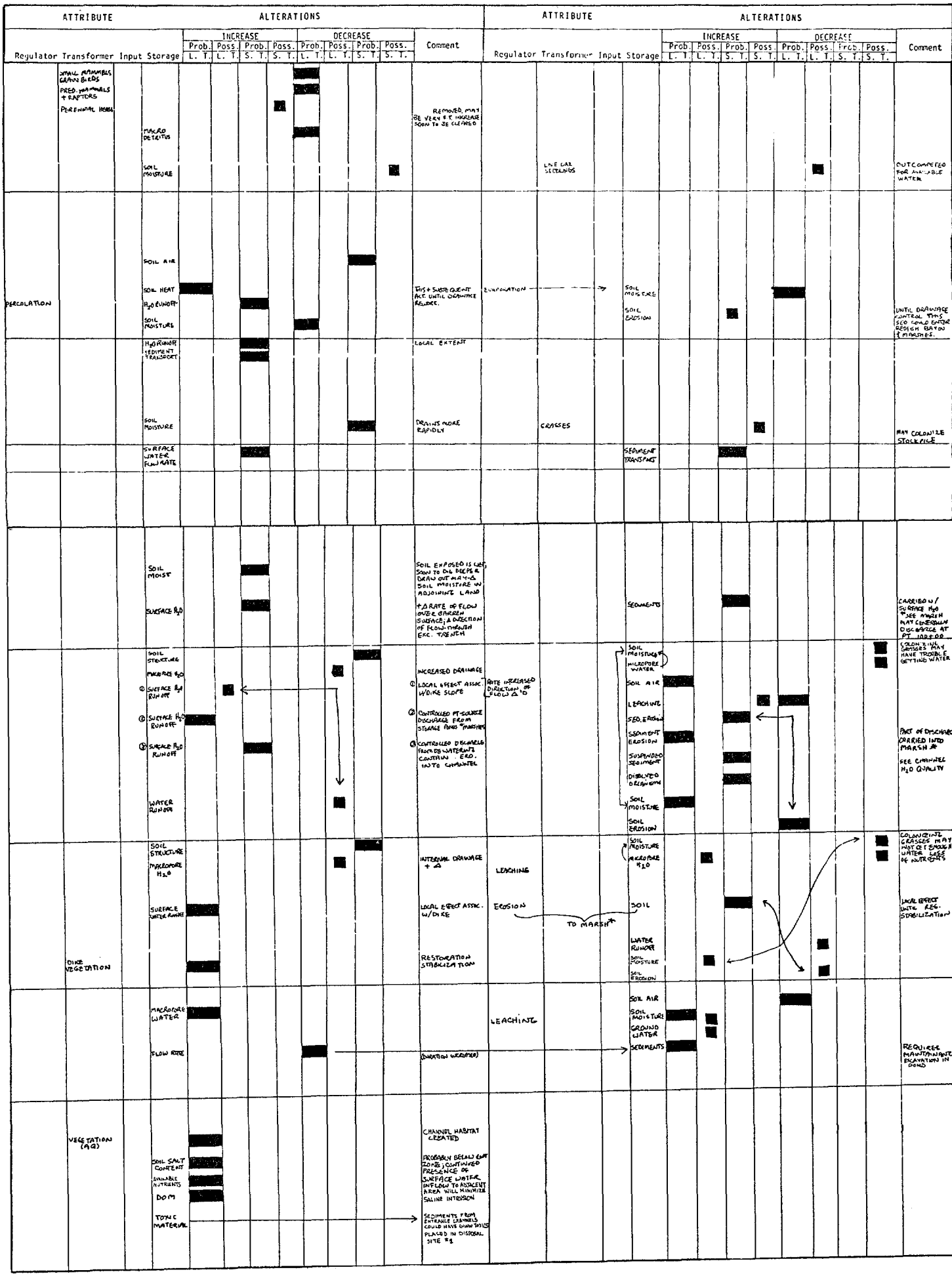

ATTRIBUTE				ALTERATIONS										ATTRIBUTE				ALTERATIONS									
				INCREASE				DECREASE										INCREASE				DECREASE					
				Prob. L. T.	Poss. L. T.	Prob. S. T.	Poss. S. T.	Prob. L. T.	Poss. L. T.	Prob. S. T.	Poss. S. T.	Comment	Regulator	Transformer	Input	Storage	Prob. L. T.	Poss. L. T.	Prob. S. T.	Poss. S. T.	Prob. L. T.	Poss. L. T.	Prob. S. T.	Poss. S. T.	Comment
	SMALL MAMMALS GRAIN BIRDS PRED. MAMMALS + RAPTORS PERENNIAL HERBS		MACRO DETRITUS SOIL MOISTURE									REMOVED, MAY BE VERY F.T. INCREASE SOON TO BE CLEARED		LIVE CAT SEEDLINGS												OUTCOMPETED FOR AVAILABLE WATER
PERCOLATION			SOIL AIR SOIL HEAT H_2O RUNOFF SOIL MOISTURE									THIS + SUBSEQUENT ACT. UNTIL DRAINAGE REDUCE.	EVAPORATION			SOIL MOISTURE SOIL EROSION										UNTIL DRAINAGE CONTROL THIS SED COULD ENTER REDFISH BAYOU & MARSHES.
			H_2O RUNOFF SEDIMENT TRANSPORT SOIL MOISTURE									LOCAL EXTENT DRAINS MORE RAPIDLY		GRASSES												MAY COLONIZE STOCKPILE
			SURFACE WATER FLOW RATE													SEDIMENT TRANSPORT										
			SOIL MOIST SURFACE H_2O									SOIL EXPOSED IS WET, SOON TO DIG DEEPER DRAW OUT MAY-Δ SOIL MOISTURE IN ADJOINING LAND +Δ RATE OF FLOW OVER BARREN SURFACE; Δ DIRECTION OF FLOW-THROUGH EXC. TRENCH					SEDIMENTS										CARRIED W/ SURFACE H_2O *SEE MARSH MAY GENERALLY DISCHARGE AT PT 100+00
			SOIL STRUCTURE MACROPORE H_2O ① SURFACE H_2O RUNOFF ② SURFACE H_2O RUNOFF ③ SURFACE H_2O RUNOFF WATER RUNOFF									INCREASED DRAINAGE ① LOCAL EFFECT ASSOC. W/DIKE SLOPE ② CONTROLLED PT-SOURCE DISCHARGE FROM STORAGE PONDS *MARSHES ③ CONTROLLED DISCHARGE FROM DEWATERING CONTAIN. ERO. INTO CHANNEL	RATE INCREASED DIRECTION OF FLOW Δ'D				SOIL MOISTURE* MICROPORE WATER SOIL AIR LEACHING SED. EROSION SEDIMENT EROSION SUSPENDED SEDIMENT DISSOLVED ORGANISMS SOIL MOISTURE SOIL EROSION									COLONIZING GRASSES MAY HAVE TROUBLE GETTING WATER PART OF DISCHARGE CARRIED INTO MARSH * SEE CHANNEL H_2O QUALITY
	DIKE VEGETATION		SOIL STRUCTURE MACROPORE H_2O SURFACE WATER RUNOFF									INTERNAL DRAINAGE + Δ LOCAL EFFECT ASSOC. W/DIKE RESTORATION STABILIZATION	LEACHING EROSION	TO MARSH*		SOIL MOISTURE MICROPORE H_2O SOIL WATER RUNOFF SOIL MOISTURE SOIL EROSION										COLONIZING GRASSES MAY NOT GET ENOUGH WATER LOSS OF NUTRIENTS LOCAL EFFECT UNTIL REG. STABILIZATION
			MACROPORE WATER FLOW RATE									(DURATION INCREASED)	LEACHING			SOIL AIR SOIL MOISTURE GROUND WATER SEDIMENTS										REQUIRES MAINTAINANCE EXCAVATION IN POND
	VEGETATION (AQ)		SOIL SALT CONTENT AVAILABLE NUTRIENTS DOM TOXIC MATERIAL									CHANNEL HABITAT CREATED PROBABLY BELOW CONT ZONE; CONTINUED PRESENCE OF SURFACE WATER INFLOW TO ADJACENT AREA WILL MINIMIZE SALINE INTRUSION SEDIMENTS FROM ENTRANCE CHANNELS COULD HAVE GIVEN TOXICS PLACED IN DISPOSAL SITE #1																

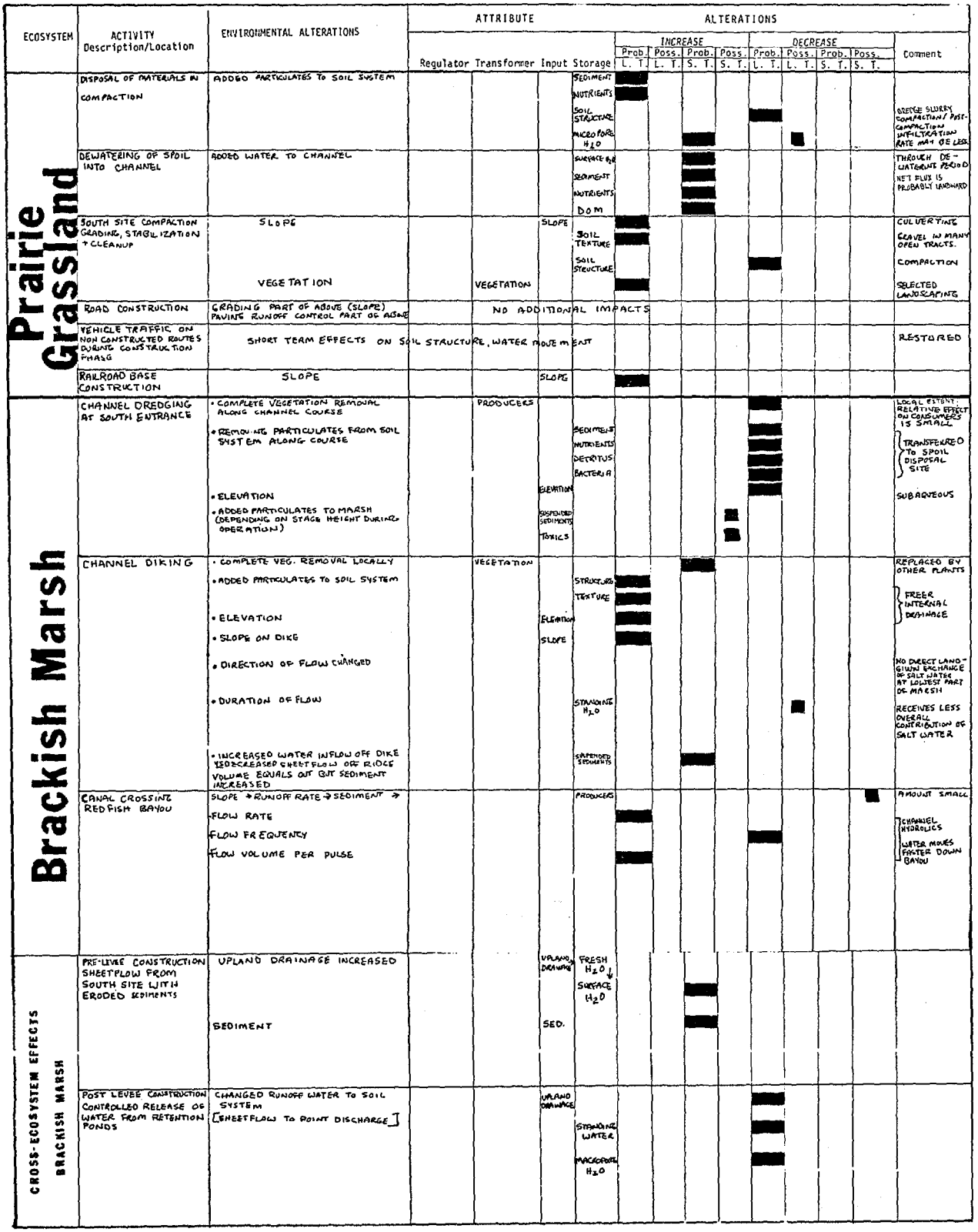

Figure E4 (cont'd)

Record of Ecological Alterations Analysis

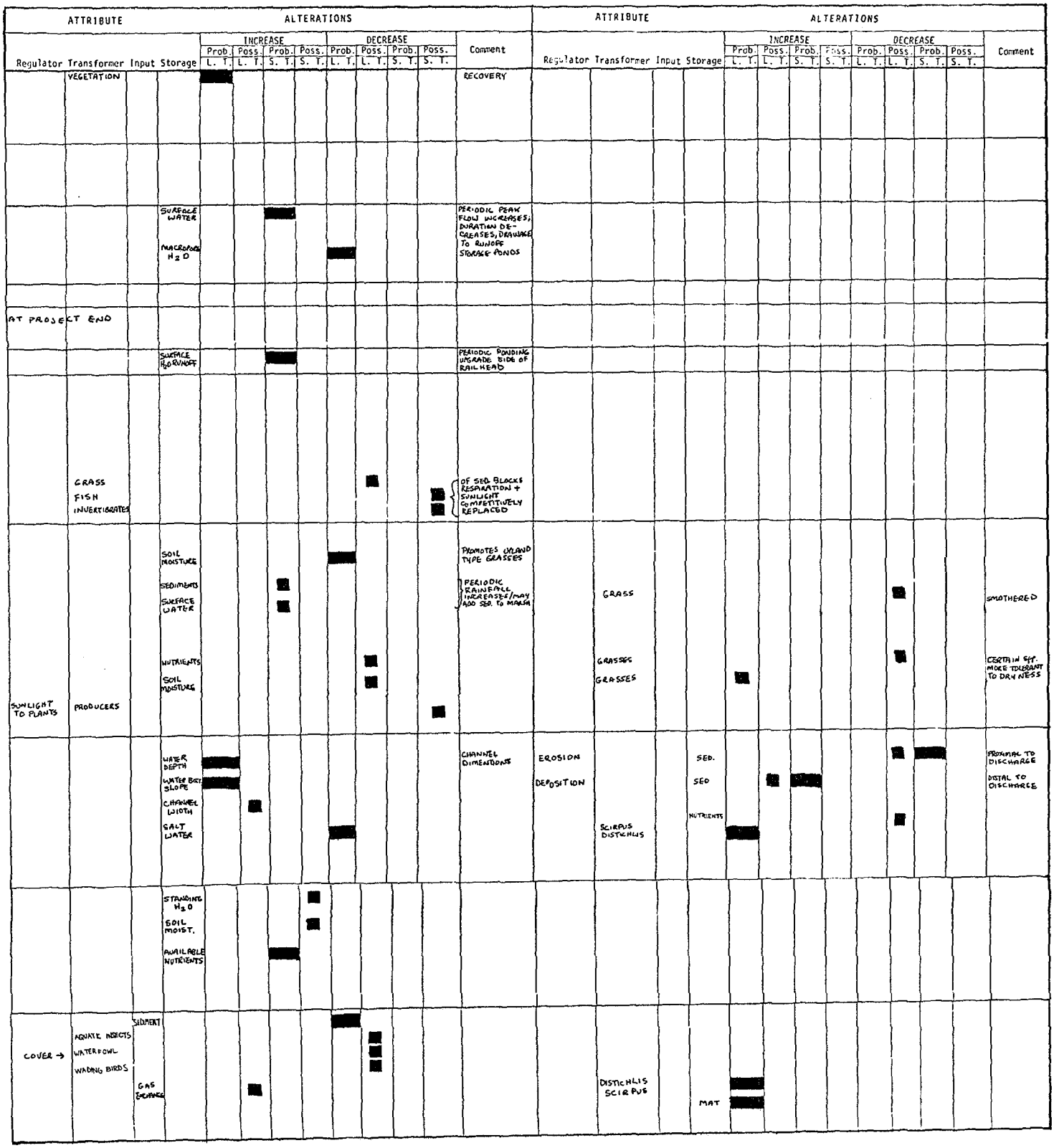

Figure E4 (cont'd)

Record of Ecological Alterations Analysis

APPENDIX F

BIBLIOGRAPHY

Introduction

The study bibliography is presented in seven categories, which are:

Engineering and Design
Environmental Inventory, Impact Analysis, and Planning
Industrial Requirements and Location Factors
Legal and Institutional Analysis
Ports, Waterways, and Canals
Socioeconomics
Bibliographies

The citations of the seven categories include the references to particular sections in the main body of this report, as well as other references.

Engineering and Design

Brinker, R. C. 1969. *Elementary Surveying,* 5th edition. Scranton, Pennsylvania: International Textbook Company.

British Hydromechanics Research Association, 1975. *First International Symposium on Dredging Technology.* Canterbury, England.

Caterpillar Tractor Co. 1974. *Caterpillar Performance Handbook.*

Chilton, C. H. 1960. *Cost Engineering in the Process Industries.* McGraw-Hill.

Cornick, H. F. 1959. *Dock and Harbour Engineering,* Vol. 2, *The Design of Harbours.* London: C. Griffin & Co.

Cornick, H F. 1962. *Dock and Harbour Engineering,* Vol. 4, *Construction.* London: C. Griffin & Co.

DeLonge, H. C. and G. C. Guarino. 1976. "Variations in Raw-Water Supply-Effect on Treatment and Cost." *Journal of the American Waterways Association,* Vol. 67, No. 2.

Espey, Huston & Associates. 1977. *A Study of the Placement of Materials Dredged from Texas Ports and Channels.* Prepared for the General Land Office of Texas.

Engineering News Record. 1976. "Unit Prices." August 5, 1976 and August 26, 1976.

Fair, G. M., J. C. Geyer, and D. A. Okun. 1971. *Elements of Water Supply and Wastewater Disposal,* Second Edition. New York: John Wiley & Sons, Inc.

Giannio, S. P. and H. Wang. 1974. *Engineering Considerations for Marinas in Tidal Marshes.*

Godfrey, R. S. 1975. *Building Construction Cost Data-1976.* Duxbury, Mass.: Snow Means Company, Inc.

Herbich, J. B., et al. 1971. *Proceedings of the Dredging Seminar (3rd) held on November 20, 1970.* Center for Dredging Studies, Texas A&M University.

Herbich, J. B. 1975. *Coastal and Deep Ocean Dredging.* Gulf Publishing Co.

Herbich, J. B. 1976. "Engineering Aspects of Operation and Maintenance of the Gulf Intracoastal Waterway in Texas." *Dredging: Environmental Effects and Technology.* Proc. of WODCON VII, San Francisco, California.

Johnson, Bernard Engineers, Inc. 1973. *Freeport Shrimpboat Harbor, Brazos River Harbor Navigation District of Brazoria County.*

Kambe, W. T. 1951. *Soil Testing for Engineers.* New York: John Wiley and Sons.

Kray, C. J. 1973. "Design of Ship Channel and Maneuvering Areas." *Journal of the Waterways, Harbors and Coastal Engineering Division.* Proceedings of the ASCE. American Society of Civil Engineers.

Marinos, G. and J. W. Woodward. 1968. "Estimation of Hurricane Surge Hydrographs." *Journal of the Waterways and Harbors Division.* ASCE Vol. 94, No. WW2, May 1968.

Pavoine, J. L., J. E. Heer, Jr., and D. J. Hagerty. 1974. *Handbook of Solid Waste Disposal.* New York: Van Nostrand Reinhold Co.

Peck, R. B., W. E. Hanson, and T. H. Thornburn. 1963. *Foundation Engineering.* New York: John Wiley and Sons, Inc.

Reid, R. O. and B. R. Bodine, 1968. "Numerical Model for Storm Surges in Galveston Bay." *Journal of the Waterways and Harbors Division.* ASCE, Vol. 94, No. WWI. Petroleum Extension Service, UT Division of Extension, and Pipe Line Contractors Association, Dallas, Texas.

Walmer, M. E. and S. L. Baron. 1972. *Manual of Structural Design and Engineering Solutions.* Prentice-Hall, Inc.

Environmental Inventory, Impact Analysis and Planning

Adkins, W. G. and D. Burke, Jr. 1974. *Social, Economic, and Environmental Factors in Highway Decision Making.* In cooperation with the Department of Transportation Federal Highway Administration, Research Report 148-4, Study 2-1-71-148, Highway Decision Making, Texas Transportation Institute, Texas Highway Department.

Alden, Dr. H. R 1974. *Environmental Impact Assessment, A Procedure for Coordinating and Organizing Environmental Planning.* Technical Publication No. 10, for Thorne Ecological Institute and Rocky Mountain Center on the Environment.

Allbee, R. N. and D. A. Storey. 1973. *Elements in a Decision Framework for Planning the Allocation of Coastal Land and Water Resources with Illustration for a Coastal Community.* University of Massachusetts at Amherst: Water Resources Research Center.

Allen, B. L., et al. 1974. *Procedure for Location of a Least Impact Environmental Corridor for a Lineal Development, Volume One.* For the Texas Water Development Board by the Water Resources Center, Texas Tech University.

Allen, P. F. 1950. "Ecological Basis for Land Use Planning in Gulf Coast Marshlands." *Journal Soil and Water Conservation.* Vol. 5, pp. 57-62.

American Public Health Association, American Water Works Association, WPCF. 1971. *Standard Methods for the Examination of Water and Waste Water.* 13th edition.

American Society of Civil Engineers. 1976. "Dredging and Its Environmental Effects." *American Society of Civil Engineers: Proceedings.*

American Society of Planning Officials. *Land Use and the Environment, An Anthology of Readings.* Prepared under the auspices of The Environmental Studies Division of the Office of Research and Monitoring, The Environmental Protection Agency. Washington, D. C.

Babcock, K. M. 1967. "The Influence of Water Depth and Salinity on Wiregrass and Saltmarsh Grass." Master's dissertation. LSU and A&M College.

Battelle Memorial Institute. *Development of an Economic Environmental Trade-Off Model for Industrial Land Use Planning.* Columbus Laboratories of the Battelle Memorial Institute.

Battelle Memorial Institute. 1972. *Environmental Evaluation System for Water Resources Planning.* Final Report to the Bureau of Reclamation, January 31, 1972. Contract No. 14-06-0-7182. Columbus Laboratories of the Battelle Memorial Institute.

Bernard, H. A. and R. J. LaBlanc. 1965. "Resume of the Quaternary Geology of the Northwestern Gulf of Mexico Province." In H. E. Wright, Jr. and D. G. Frey (eds.) *The Quaternary of the United States.* Princeton University Press.

Bernard, H. A., et al. 1970. *Recent Sediments of Southeast Texas, A Field Guide to the Brazos Alluvial and Deltaic Plains and the Galveston Barrier Island Complex.* University of Texas, Austin, Bureau of Economic Geology. Guidebook 11.

Blakey, J. F. and H. L. Kunze. 1971. *Reconnaissance of the Chemical Quality of Surface Waters of the Coastal Basins of Texas.* Prepared by the U.S. Geological Survey in cooperation with the Texas Water Development Board, Report 130.

Blum, J. T. 1968. "Salt Marsh *Spartina* and Associated Algae." *Ecol. Monograph.* Vol. 38, pp. 199-222.

Bodine, B. R. 1969. *Hurricane Surge Frequency Estimated for the Gulf Coast of Texas.* Technical Memo No. 26. Coastal Engineering Research Center.

Bragg, D. M. 1974. *A Survey of the Economic and Environmental Aspects of an Onshore Deepwater Port at Galveston, Texas.* Texas A&M University Sea Grant Publication, TAMU-SG-74-213.

Brown, L. F., Jr. R. A. Morton, J. H. McGowen, C. W. Kreitler, and W. L. Fisher. 1974. *Natural Hazards of the Texas Coastal Zone.* University of Texas at Austin. Bureau of Economic Geology.

Bruce, C. H 1973. "Pressured Shale and Related Sediment Deformation: A Mechanism for Development of Regional Contemporaneous Faults." *Amer. Association Petroleum Geologists Bull.* v. 57(5), pp. 878-886.

Buckmann, h. O. and N. C. Brady. 1969. *The Nature and Properties of Soil.* Seventh Edition, New York: MacMillan Co.

Burchell, R W. and D. Listokin. 1975. *The Environmental Impact Handbook.* The Center for Urban Policy Research, Rutgers University.

California State Polytechnic University. 1972. *The Coastal Plain of San Diego County, A Planning System for Phase 1: Northern Sector.* Lab for Experimental Design, School of Environmental Design, Department of Landscape Architecture.

Carnes, S. and P. Friesma. 1975. *Urbanization and the Northern Great P ains.* Evanston, Ill.: Northwestern University, Center for Urban Affairs.

Chamberlain, J. L. 1959. "Gulf Coast Marsh Vegetation as Food of Wintering Waterfowl." *Journal of Wildlife Management.* 23(1): 97-102.

Coomber, N. H. and A. K. Biswas. 1973. *Evaluation of Environmental Intangibles.* New York: Genera Press.

Copeland, B. J. 1966. "Effects of Industrial Waste on the Marine Environment." *Journal of Water Pollution Control.* 38(6): 1000-1010.

CORE Laboratories, Inc. 1972. *A Survey of the Subsurface Saline Water of Texas,* Volume 2, *Chemical Analyses of Saline Water.* Conducted by CORE Laboratories, Inc., Consulting and Engineering Department, Dallas, Texas. Prepared under contract for the Texas Water Development Board, Report 157.

CORE Laboratories, Inc. 1972. *A Survey of the Subsurface Saline Water of Texas,* Volume 8, *Geological Well Data.* Conducted by CORE Laboratories, Inc. Consulting and Engineering Department. Prepared under contract for the Texas Water Development Board, Report 157.

Cronin, L.E. (ed.) Darnell, R. M., et al. 1976. *Impacts of Construction Activities in Wetlands of the United States.*

U.S. Environmental Protection Agency. Office of Research and Development. Corvallis Environmental Research Laboratory. Corvallis, Oregon.

Dee, N., et al. 1973. *Planning Methodology for Water Quality Management Environmental Evaluation System.* Columbus, Ohio: Battelle, Columbus Laboratories.

Dickert, T. G. (ed.) with K. R. Domeny. 1974. *Environmental Impact Assessment: Guidelines and Commentary.* University Extension, University of California at Berkeley.

Ditton, R. B. and T. L. Goodale. 1972. *Environmental Impact Analysis: Philosophy and Methods, Proceedings of the Conference on Environmental Impact Analysis.* Green Bay, Wisconsin. Sponsored by the University of Wisconsin Sea Grant Program.

Doudoroff, P. and M. Katz. 1950. "Critical Review of Literature on the Toxicity of Industrial Wastes and Their Components to Fish. I. Alkalies, Acids and Inorganic Gases." *Sewage, Industrial Wastes.* 22(11) 1432-1458.

Doudoroff, P. and M. Katz. 1953. "Critical Review of Literature on the Toxicity of Industrial Wastes and Their Components to Fish. II. The Metals, Salts." *Sewage and Industrial Wastes.* 25(7): 802-839.

Ewing, M., D. B. Ericson, and B. C. Heezen. 1958. "Sediments and Topography of the Gulf of Mexico." Weeks, L. G. (ed.) *Habitat of Oil.* Amer. Assoc. Petroleum Geologists, pp. 995-1053.

Feld, S. E., T. A. Grigalunas and R. Frye. 1973. *An Inter-Industry Model for Indicative Regional Water Resource Planning: Some Preliminary Results.* Sea Grant, University of Rhode Island, Marine Reprint Series No. 4. Article is reprinted from the *Journal of the Northeastern Agricultural Economics Council.*

Fisher, W. L., L. F. Brown, Jr., J. H. McGowen, and C. G. Grant. 1973. *Environmental Geologic Atlas of the Texas Coastal Zone, Beaumont-Port Arthur Area.* Bureau of Economic Geology, The University of Texas at Austin.

Gabrysch, R. K. 1967. *Development of Ground-water in the Houston District, 1961-1965.* Texas Water Development Board, Report 63.

Gallion, J. and R. W. Hann. 1973. *Compilation and Evaluation of Technical Literature Related to Water Quality Parameters, Analytical Methods of Analysis, Analytical Modeling Methods and Water Quality Management.* Environmental Engineering Division, Civil Engineering Department, Texas A&M University for the Texas Water Quality Board.

Galveston County Water Authority. 1974. *Study for Development of Water Resources for Galveston County and Contiguous Area.* Prepared by Bovay Engineers, Inc. and Walsh Engineering, Inc. Galveston, Texas.

Greenman, N. N. and R. J. LeBlanc. 1956. "Recent Marine Sediments and Environments of Northwest Gulf of Mexico." *Amer. Association Petroleum Geologists Bulletin,* Vol. 40, pp. 813-847.

Hahl, D. C. and K. W. Ratzlaff. 1970. *Chemical and Physical Characteristics of Water in Estuaries of Texas, September 1967-September 1968.* Prepared by the U.S. Geological Survey in cooperation with the Texas Water Development Board. Report 117.

Hahl, D. C. and K. W. Ratzlaff. 1972. *Chemical and Physical Characteristics of Water in Estuaries of Texas, October 1968-September 1969.* Prepared by the U.S. Geological Survey under cooperative agreement with the Texas Water Development Board. Report 144.

Hahl, D. C. and K. W. Ratzlaff. 1973. *Chemical and Physical Characteristics of Water in Estuaries of Texas, October, 1969-September, 1970.* Prepared by the U.S. Geological Survey under cooperative agreement with the Texas Water Development Board, Report 171.

Hahl, D. C. and K. W. Ratzlaff. 1975. *Chemical and Physical Characteristics of Water in Estuaries of Texas, October 1970-September 1971.* Prepared by the U.S. Geological Survey under cooperative agreement with the Texas Water Development Board. Report 191.

Haven, K. F. 1975. *A Methodology for Impact Assessment in the Estuarine/Marine Environment, University of California, Livermore, California.* U.S. Department of Commerce National Technical Information Service.

Houston-Galveston Area Council. 1975. Land Resources Laboratory Map Series, Land and Water Resources. Houston, Texas.

Houston Lighting and Power Company. 1974. *Allens Creek Nuclear Generating Station, Units 1 and 2.* Environmental Report, Vol. 23.

Ingram, B. I. 1974. *Economic Impact of Recreation and Tourism Within Texas Coastal Zone.* Industrial Economics Research Division, College of Engineering, Texas Engineering Experiment Station, Texas A&M University, Sea Grant Program.

Jain, R. K., et al. 1974. *Handbook for Environmental Impact Analysis.* Construction Engineering Research Laboratory.

Jehn, K. H. 1974. *The Role of the Atmospheric Sciences in the Texas Coastal Zone.* Atmospheric Science Group, The University of Texas, College of Engineering. Report No. 40. Sponsored by the Division of Natural Resources and Environment and the Atmospheric Science Group.

Johnson, S. L., Jack Rawson, and R. E. Smith. 1969. *Characteristics of Tide-Affected Flow in the Brazos River Near Freeport, Texas, March 29-30, 1965.* Prepared by the U.S. Geological Survey in cooperation with the Texas Water Development Board. Report 69.

Johnston, M. C. 1955. "Vegetation of the Edian Plain and Associated Coastal Features of Southern Texas." University of Texas doctoral dissertation. Austin, Texas.

Kane, J. I. Vertinsky, and W. Thomson. 1973. KSIM: *A Methodology for Interactive Resource Policy Stimulation.* Water Resources Research. Vol. 9, No. 1, pp. 65-79. University of British Columbia: Resource Science Center.

Kreitler, C. W. 1976. *Faulting and Land Subsidence from Ground-Water and Hydrocarbon Production, Houston-Galveston, Texas.* Proc. Second International Symposium on Land Subsidence. Anaheim, California.

Kreitler, C. W. 1976. *Lineations and Faults in the Texas Coastal Zone.* University of Texas, Austin, Bureau of Economic Geology. RI No. 85.

Leopold, L. B., F. E. Clarke, B. B. Hanshaw, and J. R. Bolsley. 1971. *Procedure for Evaluating Environmental Impact.* Geological Survey Circular 645. U.S. Department of the Interior.

Lewis, P. H., Jr. 1969. *Upper Mississippi River Comprehensive Basin Study: Appendix B, Aesthetic and Cultural Values.* U.S. Department of Interior, National Park Service, Northeast Region.

Lissauer, I. M., et al. 1975. *Preliminary Projections of Oil Spill Movement for Three Potential Deepwater Port Sites in the Gulf of Mexico.* U.S. Department of Commerce, National Technical Information Service.

Louisiana. Department of Conservation. 1963. *Groundwater Conditions in Southwestern Louisiana, 1961 and 1962.* Department of Conservation, Geological Survey, and Department of Public Works, Water Resources Pamphlet No. 12. Baton Rouge, Louisiana.

Lynch, J. J., T. O'Neil, and D. W. Fay. 1947. "Management Significance of Damage by Geese and Muskrats to Gulf Coast Marshes." *Journal Wildlife Management.* 11(1) pp. 50-76.

McGowen, J. H., L. F. Brown, Jr., T. J. Evans, W. L. Fisher, and C. G. Groat. 1976. *Environmental Geologic Atlas of the Texas Coastal Zone — Bay City-Freeport Area.* Bureau of Economic Geology. The University of Texas at Austin.

McHarg, I. L. 1971. *Design with Nature.* Garden City, New York. Doubleday/Natural History Press.

Masch, F. D. and Associates. 1971. *Simulation of Water Quality in Streams and Canals.* Theory and Description of the QUAL-1 Mathematical Modeling System. Texas Water Development Board. Report 128.

Minnesota Power and Light Company and Northern States Power Company. 1976. *Twin Cities to Forbes Transmission Project—Construction Permit Application for a 500/345 KV Transmission Facility.* Minneapolis, Minnesota.

Mixon, J. 1974. *Environmental Analysis for Development Planning. Chambers County, Texas.* Technical Report, Volume 3, Coastal Zone Management: A Proposed Incremental Change System for Texas by Southwest Center for Urban Research.

Moore, J. L., et al. 1973. *Final Report on a Methodology for Evaluating Manufacturing Environmental Impact Statement for Delaware's Coastal Zone.* Battelle-Columbus Laboratories.

Morton, R. A. and M. J. Pieper. 1975. *Shoreline Changes in the Vicinity of the Brazos River Delta* (San Luis Pass to Brown Cedar Cut): An Analysis of Historical Changes of the Texas Gulf Shoreline. Bureau of Economic Geology, The University of Texas at Austin. Geological Circular 75-4.

Murray, G. E. 1961. *Geology of the Atlantic and Gulf Coastal Province of North America.* New York: Harper and Brothers.

Navigable Waters Safety and Environmental Quality Act. 1971. Hearings before the Committee on Commerce. U.S. Senate, 92nd Congress, 1st Session on S. 2074, September, 1971. U.S. Document.

North Central Texas Council of Governments. 1975. *Open Space, Identifying the Critical Areas.*

Odum, H. T. 1967. "Biologic Circuits and the Marine Systems of Texas." *Pollution and Marine Ecology.* eds. T. A. Olson and F. J. Burgess, pp. 99-157. New York: Interscience Publishers.

Odum, H. T. 1971. *Environment, Power and Society.* New York: John Wiley and Sons, Inc.

Odum, H. T. 1972. "An Energy Circuit Language for Ecological and Social Systems: Its Physical Basis." *Systems Analysis and Simulation in Ecology.* B. C. Patten, ed. Vol. 2, pp. 140-211. New York: Academic Press.

Odum, H. T. 1972. "Use of Energy Diagrams for Environmental Impact Statements." *Tools for Coastal Zone Management.* pp. 197-213. Washington, D.C.¾ Marine Technology Society.

Odum, H. T., B. J. Copeland, and E. A. McMahan. 1974. *Coastal Ecological Systems of the United States.* Vol. I-IV. The Conservation Foundation: Washington, D.C.

Olson, T. and F. Burgess (eds). 1966. *Pollution and Marine Ecology.* New York: Interscience.

Palmisano, A. W., Jr. 1967. *Ecology of Scirpus olneyi and Scirpus robustus in Louisiana coastal marshes.* Master's dissertation, Louisiana State University and Agricultural and Mechanical College.

Penfound, W. T. and E. S. Hathaway. 1938. "Plant Communities in the Marshlands of Southeastern Louisiana." *Ecological Monographs* 8(1) pp. 1-56.

Rapport, D. J. and J. E. Turner. 1977. "Economic Models in Ecology, the Economics of Resource Allocation Provide a Framework for Viewing Ecological Processes." *Science,* Vol. 195, January 28, 1977. pp. 367-373.

Rawson, J. 1967. *Study and Interpretation of Chemical Quality of Surface Waters in the Brazos River Basin, Texas.* Prepared by the U.S. Geological Survey in cooperation with the Texas Water Development Board and the Brazos River Authority. Report 55.

Reed, A. E. and J. D. Mertes. 1975. *Preserving Environmental Integrity, Guidelines for Recreational Development in Sensitive Areas.* Department of Park Administration Landscape Architecture and Horticulture, Texas Tech University, Lubbock, Texas.

Reid, G. K. 1961. *Ecology of Inland Waters and Estuaries.* New York: Reinhold.

Reid, W. M. 1973. *Active Faults in Houston, Texas.* University of Texas, Austin, Texas. Ph.D. dissertation, 122 p.

Resource Planning Associates, Inc. 1974. *OCS Oil and Gas—An Environmental Assessment.* Vol. 4. Prepared for the Council on Environmental Quality. Washington, D.C.: GPO.

Rice Center for Community Design and Research. 1974. *Environmental Analysis for Development Planning,*

Chambers County, Texas. Technical Report, Volume One, Appendices, An Approach to Natural Environmental Analysis. Houston: Rice University.

Rice Center for Community Design and Research. 1975. *An Interim Report on an Approach for Identifying Land Uses Which Have a "Direct Impact on Coastal Waters" Within Chambers County by the Environmental Analysis Component.* NSF/RANN Chambers County Study, Phase 2, June 5, 1975. Research under Sub-Contract to the Southwest Center for Urban Research.

Rice Center for Community Design and Research. 1976. *Texas Gulf Coast Program Research Report 1.* 3 vols. Houston: Rice University.

Rossa, W. M. and R. H. Chabreck. 1972. "Factors Affecting the Growth and Survival of Natural and Planted Stands of *Scirpus olneyi.*" *Proc. 26th Ann. Conference of the Southeast Game & Fish Commission,* pp. 178-188.

Rulison, M. V. E., et al. 1972. *Evaluation of Planning for Wetlands Drainage Projects in the Southeastern Coastal Plains.* Research Triangle Regional Planning Commission. Prepared for Office of Water Resources Research. Distributed by NTIS DOC.

Sandeen, W. M.and J. B. Wesselman. 1973. *Ground Water Resources of Brazoria County, Texas.* Prepared by the U.S. Geological Survey under cooperative agreement with the Texas Water Development Board. Report 163.

Seadock, Inc. 1974. *Environmental Report Summary.* 3 cols. Texas Offshore Crude Oil Unloading Facility.

Seadock, Inc. 1975. *Deepwater Port License Application.* Texas Offshore Oil Unloading Facility.

Shelton, J. W. 1968. "Role of Contemporaneous Faulting During Basinal Subsidence." *American Association of Petroleum Geologists Bulletin,* v. 52(3), pp. 399-413.

Shields, M. A. 1975. "Social Impact Studies: An Expository Analysis." *Environment and Behavior.* Vol. 7, No. 3. Sage Publications, Inc. New York. pp. 265-284.

Singleton, J. R. 1949. "Coastal Drainage Problems in Relation to Waterfowl." *Texas Journal of Science* (3): 25-28.

Slotta, L. S., C. K. Sollitt, D. A. Bella, D. R. Hancock, J. E. McCauley, R. Parr. 1973. *Effects of Hopper Dredging and in Channel Spoiling in Coos Bay, Oregon.* Final Report October 4, 1972. Interdisciplinary Studies of the School of Engineering of Oceanography, Oregon State University.

Smith, S. H. 1966. "Effects of Water use Activities in the Gulf of Mexico and South Atlantic Estuarine Areas." *A Symposium on Estuarine Fisheries.* American Fisheries Society Special Publication 3. Supplement to Transactions of the American Fisheries Society (4).

Sorenson, Jens C. 1971. *A Framework for Identification and Control of Resource Degradation and Conflict in the Multiple Use of the Coastal Zone.* Department of Landscape Architecture, College of Environmental Design, University of California at Berkeley.

Southwest Center for Urban Research. 1975. *Environmental Analysis for Development Planning—Chambers County, Texas.* Volume Five, *Technical Report.* Applications for the Texas Coastal Zone Management Program.

Southwest Center for Urban Research. 1975. *Environmental, Economic and Political Factors in Land Use Decision Making.* Applications for the Texas Coastal Zone Management Program.

Teal, J. M. 1962. "Energy Flow in the Salt Marsh Ecosystem of Georgia." *Ecology,* Vol. 43(4) pp. 614-624.

Texas Air Control Board. 1974. *Ambient Air Quality Survey—Clute and Freeport, Texas.* October 15, 1973 through April 3, 1974.

Texas A&M University. 1973. *Waste Management in the Texas Coastal Zone.* Office of the Governor, Division of Planning Coordination, Coastal Resources Management Program, ICNRE, Austin, Texas.

Texas A&M University. 1969. *Texas Plants, A Checklist and Ecological Summary.* Revised. Texas A&M University, Texas Agricultural Experiment Station.

Texas General Land Office. 1976. *Texas Coastal Management Program. Appendices.* Prepared by Research and Planning Consultants, Inc. Austin, Texas.

Texas. Governor's Water Resource Conservation and Development Task Force. 1976. *1975 National Water Assessment—State Regional Future, Texas Gulf Region.*

Texas. Office of the Governor. 1972. *A Conceptual Report on the Management of Bay and Estuarine Systems, Phase 1.* Division of Planning Coordination. Office of the Governor. Coastal Resources Management Program.

Texas. Office of the Governor. 1973. *A Conceptual Report: The Management of Bays and Estuarine Systems in the Texas Coastal Zone—Phase II, Preliminary Environmental Assessment of the Effects of Man's Activities on Coastal Environmental Units.* Division of Planning Coordination, Office of the Governor. Coastal Resources Management Program.

Texas. Office of the Governor. 1973. *A Conceptual Report: Waste Management in the Texas Coastal Zone.* Division of Planning Coordination, Office of the Governor, Coastal Resources Management Program.

Texas. Office of the Governor. 1972. *Electric Power in Texas, a Report of the Advisory Committee on Power Plant Siting.* Division of Planning Coordination.

Texas. Parks and Wildlife Department, Comprehensive Planning Branch, 1975. *Regional Environment Analysis of the Houston-Galveston Region.* Texas Outdoor Recreation Plan. Vol. 6. Austin, Texas.

Texas. Water Commission. 1962. *Drainage Areas of Texas Streams, San Jacinto River Basin and San Jacinto-Brazos Coastal Area.* Prepared in cooperation with the U.S. Geological Survey. Circular No. 62-05.

Texas. Water Development Board and Water Resources Engineers, Inc. 1970. *Systems Simulation for Management of a Total Water Resource, A Completion Report,* Volume 1, *Introduction.* Report 188.

Texas. Water Development Board. 1968. *The Texas Water Plan.* Austin, Texas.

Texas. Water Development Board. 1971. *Inventories of Irrigation in Texas 1958, 1964, and 1969.* Report 127.

Texas. Water Development Board. 1977. *Continuing Water Resources Planning and Development for Texas. Draft.* Phase 1 – Planning Methods, Revised Estimates of Present Water Demand and Availability, Projections of Future Water Needs, and Identification of Some Potential Sources of Water Supply for Use in Modifying and Amending the Texas Water Plan. Austin, Texas.

Texas. Water Quality Board. 1973. *Texas Water Quality Standards.*

Thompson, John I. and Company. 1968. *A Perspective of Regional and State Marine Environmental Activities. A Questionnaire Survey, Statistics and Observations.*

Thurow, C., W. Toner, and D. Erley. 1975. *Performance Controls for Sensitive Lands: A Practical Guide for Local Administrators.* Chicago: American Society of Planning Officials. Planning Advisory Service. Reports Nos. 307, 308.

U.S. Bureau of Soils. 1902. *Soil Survey of the Brazoria Area, Texas.* Reprinted from Field Operations of the Bureau of Soils, 1902.

U.S. Corps of Engineers. 1971. *Survey Report on San Bernard River, Texas Flood Control.* U.S. Army Engineer District, Galveston, Corps of Engineers, Galveston, Texas.

U.S. Corps of Engineers. 1972. Draft Technical Paper, *Matrix Analysis of Alternatives for Water Resources Development.* U.S. Army Engineer District, Tulsa, Corps of Engineers, Tulsa, Oklahoma.

U.S. Department of Agriculture. 1972. *Land Use and Treatment Alternatives for the Coastal Prairie and Coast Marsh Land Resource Areas – Texas.* U.S. Department of Agriculture Soil Conservation Service.

U.S. Department of Agriculture. Soil Conservation Service. 1972 (among others). *Established Soil Series Descriptions.* Fort Worth, Texas.

U.S. Department of Agriculture. 1972. *Texas Coastal Basins Plan of Work.* Volume 2, *Appendix A – Soils of the Texas Coastal Basins, Interim Report* (Preliminary – Subject to Revision).

U.S. Department of Commerce, National Oceanic and Atmospheric Administration. 1973. *Annual Wind Distribution by Pasquill Stability Classes.* Galveston, Texas. Environmental Data Service, National Weather Records Center. Asheville, North Carolina.

U.S. Department of Interior. 1966. *Rare and Endangered Fish and Wildlife of the U.S.* U.S. Department of Interior, Bureau of Sport Fisheries and Wildlife. Resource Publication 34. Washington, D.C.

U.S. Department of Interior. 1974. *Final Environmental Impact Statement Volumes I and II, Deepwater Ports.* To accompany legislation to authorize the Secretary of the Interior to regulate the construction and operation of deepwater port facilities. U.S. Department of Interior, Office of Assistant Secretary, Program Development and Budget, Office of Economic Analysis. Washington, D.C.

U.S. Environmental Protection Agency. 1971. *The Economic and Social Importance of Estuaries, Estuarine Pollution Study Series.* U.S. Environmental Protection Agency, Water Quality Office, Technical Support Division.

U.S. Environmental Protection Agency. 1972. *Applied Ecology Seminar.* Training Manual. U.S. Environmental Protection Agency, Office of Water Programs.

U.S. Environmental Protection Agency. 1973. *The Control of Pollution from Hydrographic Modifications.* Washington, D.C.: GPO.

U.S. Environmental Protection Agency. 1976. *Impacts of Construction Activities in Wetlands of the United States.* Ecological Research Series. U.S. Environmental Protection Agency. Office of Research and Development. Corvallis Environmental Research Laboratory. Corvallis, Oregon.

U.S. Federal Water Pollution Control Administration. 1970. *The Characteristics and Pollutional Problems Associated with Petrochemical Wastes. Summary Report.* Prepared by Engineering-Science, Inc./Texas. Austin, Texas.

U.S. General Accounting Office. 1975. *Factors to be Considered in Setting Future Policy for Use of Inland Waterways.* Report to the Congress by the Comptroller General of the U.S. U.S. Document.

U.S. Geological Survey. 1973. *Water Facts and Figures for Planners and Managers.* Circular 601-1. Washington, D.C.

Zaporozec, A. 1974. "Environmental Implications in Use of Ground Water." *Wisconsin Conservation Bulletin.* 39(2):3-5.

Industrial Requirements and Location Factors

Adams, J. W. and M. L. Holloway. 1974. *Economic Impact of New or Expanded Industries in the Lower Rio Grande Region of Texas.* Texas Agricultural Experiment Station, Texas A&M University System in cooperation with the Office of the Governor, Office of Information Services. Austin, Texas.

American Waterways Operators, Inc. 1976. *1974 Waterside Plant Locations and Expansions: A Study in Economic Growth.* Arlington, Virginia.

Arthur D. Little, Inc. 1973. *Potential Offshore Effects of Deepwater Oil Terminal-Related Industrial Development.* Volume IV. NTIS PB 224 021.

———. 1975. *Petroleum Development in New England.* Volume II. Energy Program Technical Report 75-6. Prepared for the new England Regional Commission.

Bankers Trust Company. 1976. *Capital Resources for Energy Through the Year 1990.* Prepared by the Energy Group, Bankers Trust Company, New York.

Barry, B. J. L., E. C. Conkling, and D. M. Ray. *The Geography of Economic Systems.* Englewood Cliffs, New Jersey: Prentice-Hall, Inc.

Baumgartner, R. (ed.). 1976. *Predicasts' Basebook.* Cleveland, Ohio: Predicasts, Inc.

Beckman, M. 1968. *Location Theory.* New York: Random House.

Bower, B. T. 1966. "The Economics of Industrial Water Utilization." in Kneese, A. V. and S. C. Smith (eds), *Water Research.* Baltimore: The Johns Hopkins Press.

Carestio, R. M. "Land Absorption in Industrial Parks." *Industrial Development and Manufacturers Record.* January, 1971. pp. 18-21.

Datagraphics, Inc. 1971. *Projected Wastewater Treatment Costs in the Organic Chemicals Industry (updated).* Prepared for U.S. Environmental Protection Agency, Office of Research and Monitoring.

Evans, S. III. 1972. "Industrial Park Developments." *Appraisal Journal,* April, 1972. pp. 235-245.

Fulton, M. 1971. "New Factors in Plant Location." *Harvard Business Review.* May, 1971. pp. 4-17.

Greenhut, M. 1956. *Plant Location in Theory and in Practice.* Chapel Hill, North Carolina: University of North Carolina Press.

Greenhut, M. 1963. *Microeconomics and the Space Economy.* Chicago: Scott Foresman.

Griefen, R. J. 1970. "Impact of the Industrial Park." *Appraisal Journal.* January, 1970. pp. 83-91.

Happel, J. and D. G. Jordan. *Chemical Process Economics,* 2nd edition. New York: Marcel Dekker, Inc.

Hoover, E. M. 1948. *The Location of Economic Activity.* New York: McGraw-Hill.

Hunker, H. L. 1974. *Industrial Development.* Lexington, Mass.: Lexington Books.

Ide, E. A. 1970. *Estimating Land and Floor Area Implicit in Employment Projections.* Vols. I and V. Prepared for the Federal Highway Administration. U.S. Department of Transportation.

International Petroleum Encyclopedia. 1976. Tulsa, Oklahoma: The Petroleum Publishing Company.

Isard, W. 1956. *Location and the Space Economy.* Cambridge, Mass.: The MIT Press.

Isard, W. 1975. *Introduction to Regional Science.* Englewood Cliffs, New Jersey. Prentice-Hall, Inc.

Kinnard, W. N., Jr. and S. D. Messner. 1971. *Industrial Real Estate,* 2nd edition. Washington, D.C.: Society of Industrial Realtors.

Klimek, J. C. 1972. "Forecasting Industrial Water Requirements in Manufacturing." *Water Resources Bulletin,* American Water Resources Association. Vol. 8, No. 3, pp. 561-570.

Lochmoeller, D. C., et al. 1975. *Industrial Development Handbook.* Washington, D.C.: The Urban Land Institute.

Logan, M. L. 1970. "Locational Decisions in Industrial Plants in Wisconsin." *Land Economics.* August, 1970. pp. 325-328.

Losch, A. 1966. *The Economics of Location* (translation of *Die raumliche Ordnung der Wirtschraft,* 2nd ed., 1944). New Haven: John Wiley.

McAuliffe, R. D. 1972. "Industry vs. Environment: The Pureland Solution." *Industrial Development and Manufacturer's Record,* March/April, 1972, pp. 4-7.

McGregor, J. R. 1970. "Water as a Factor in the Location of the Industry in the Southeast." *Southeastern Geographer.* Vol. X, No. 1, pp. 41-54.

Marshall, J. L. and J. F. Malina, Jr. 1973. *Establishment of Operational Guidelines for Texas Coastal Management.* Technical Report. Industrial Water Use in the Texas Coastal Zone, Center for Research in Water Resources,

Environmental Health Engineering Research Laboratory. Department of Civil Engineering, The University of Texas at Austin. Prepared for Division of Planning Coordination, Governor's Office. Coordinated through Division of Natural Resources and Environment, The University of Texas at Austin.

Miloy, J. and E. A. Copp. 1970. *Economic Impact Analysis of Texas Marine Resources and Industries.* Texas A&M University Sea Grant 70-217.

National Petroleum Council. 1973. *Factors Affecting U.S. Petroleum Refining.* Prepared by NPC's Committee on Factors Affecting U.S. Petroleum Refining.

National Petroleum Council. 1973. *Factors Affecting U.S. Petroleum Refining: Impact of New Technology.* National Petroleum Council, Committee on Factors Affecting U.S. Petroleum Refining.

New England River Basins Commission. 1976. *Onshore Facilities Related to Offshore Oil and Gas Development.* Factbook. Boston, Mass.: New England River Basins Commission.

Reid, G. W. and L. E. Streebin. 1972. *Evaluation of Waste Waters from Petroleum and Coal Processing.* Prepared for Office of Research and Monitoring. U.S. Environmental Protection Agency.

Schmedeman, I. W., et al. 1974. "Dynamics of the Rural Land Market." *Texas Agricultural Progress,* Vol. 20, No. 4. Fall, 1974. Agricultural Experiment Station, Texas A&M University. College Station, Texas.

Shell Oil Company. No Date. *The National Energy Problem: Implications for the Petrochemical Industry.* Houston, Texas: Shell Oil Company.

Texas A&M University. 1975. *Analysis of the Role of the Gulf Intracoastal Waterway in Texas. Executive Summary.* Texas A&M University, Sea Grant 75-203.

Texas. Industrial Commission. 1975. *Study of the Supply and Demand for Skilled Construction Workers in Texas.* Final Report for Special Project Commission of State Manpower Council.

Texas/Louisiana Petrochemicals. 1975. Prepared for the Petrochemical Energy Group. Houston: Groppe and Long.

Thorne, O. J. 1971. "Industrial Park Cashflow Analysis." *Industrial Development.* March/April, 1971.

Thunen, J. H., von. 1966. (a reprint of 1826 edition) *Der isolirte Statt in Beziehung auf Nabonalokon onmie und Land wirtschaft.* Stuttgart: Gustav Frieschen.

Townroe, P. M. 1971. *Industrial Decisions.* Center for Urban and Regional Studies. The University of Birmingham.

U.S. Bureau of the Census. 1974. *Bridge Tunnel, and Elevated Highway Construction Contractors.* SIC 1622, CCT2-1-7. Census of Construction Industries, 1972, Industry Series. Washington, D.C.: GPO.

U.S. Bureau of the Census. 1975. *Industry Series United States Summary. CC72-1-1.* Census of Construction Industries, 1972. Washington, D.C.: GPO.

U.S. Bureau of the Census. 1975. *Water, Sewer, Pipe Line, Communication and Power Line Construction Contractors.* SIC 1623, CC72-1-8. Census of Construction Industries, 1972, Industry Series. Washington, D.C.: GPO.

U.S. Bureau of the Census. 1975. *Heavy Construction Contractors, Not Elsewhere Classified.* SIC 1629, CC72-1-9. Census of Construction Industries, Industry Series. Washington, D.C.: GPO.

U.S. Bureau of the Census. 1975. *1972 Census of Manufactures, Special Report Series: Water Use in Manufacturing.* MC 72(SR-4). Washington, D.C.: GPO.

U.S. Bureau of the Census. 1975. *Census of Transportation, 1972.* Commodity Transportation Survey-Area Series: Area Report 6, TC 72C2-6. Washington, D.C.: Department of Commerce.

U.S. Bureau of the Census. 1976. *Annual Survey of Manufactures, 1974, Fuels and Electric Energy Consumed.* Series N74 (S)-4.2. Washington, D.C.: GPO.

U.S. Department of Commerce, Economic Development Agency. 1973. *Industrial Location Determinants 1971-1975.* Section 1. Washington, D.C.: Department of Commerce.

U.S. Department of Commerce. 1976. *Survey of Current Business. Washington, D.C. GPO.*

U.S. International Trade Commission. 1974. *Synthetic Organic Chemicals. U.S. Production to Sales of Crude Products from Petroleum and Natural Gas,* preliminary. Washington, D.C.

U.S. International Trade Commission. 1974. *Synthetic Organic Chemicals, U.S. Production and Sales of Cyclic Intermediates,* preliminary. Washington, D.C.

Weber, A. 1929. *On the Location of Industries* (translation of *Uber den Standort der Industrie,* 1909). Chicago: University of Chicago Press.

White, R. D. 1971 "Planning Industrial Park Utilities." *Public Works,* Jan. 1971. pp. 68-70.

Whitehorn, N. C. 1973. *Economic Analysis of the Petrochemical Industry in Texas.* Texas A&M University Sea Grant 73-203.

Williamson, R. B. 1977. *Location Models for Use in Forecasting Regional and Urban Growth.* Austin, Texas: University of Texas Finance Department. Unpublished paper.

Wright, A. L. and W. T. Matthews. 1971. *Economic Development and Factors Affecting Industrial Location on the Texas Gulf Coast.* College Station, Texas: Sea Grant Program. TAMU SG-71-214.

Legal and Institutional Analysis

American Jurisprudence, Second Edition. 1969. Jurisprudence Publishers, Inc.

Baram, M. J. 1976. *Environmental Law and the Siting of Facilities.* Cambridge, Mass.: Ballinger Publishing Company.

Buchanan, S. G. 1973. "Texas Navigation Districts and Regional Planning in the Texas Gulf Coast Area." 10 *Houston Law Review* 533.

Celler, C. 1961. "Compacts and Interstate Authorities," 26 *Law and Contemporary Problems* 682.

Corpus Juris Secundum. 1961. Brooklyn, New York: The American Law Book Company.

Davis. 1975. "The Ports and Waterways Safety Act of 1972: An Expansion of the Federal Approach to Oil Pollution," 6 *Journal of Maritime Law* 249.

Dinkins, C. E. 1973. "Texas Seashore Boundary Law: The Effect of Natural and Artificial Modifications," 10 *Houston Law Review* 43 (1973)

Dolgin, E. L. and T. Guilbert (ed.). 1974. *Federal Environmental Law.* St. Paul, Minnesota: West Publishing Co.

Ereli, E. 1972. *The Environmental Regulation of the Sea and Its Resources.* Houston, University of Houston Sea Law Program (unpublished).

Fair, M. L. 1961. "Port Authorities in the United States," *Law and Contemporary Problems* 703.

Federal Reporter. 2d Series. 1977. St. Paul, Minn.: West Publishing Company.

Federal Supplement. 1977. St. Paul, Minn.: West Publishing Company.

"Federal Water Pollution Control Amendments." 1976. 13 *Houston Law Review* 135.

Goldstein. 1961. "An Authority in Action," 26 *Law and Contemporary Problems* 715.

Mandelker, Daniel R. 1976. *Environmental and Land Control Legislation.*

"Ports as a Public Service." 1971. 2 *Journal of Maritime Law* 571.

Practicing Law Institute. 1970. *Legal Control and the Environment,* 2d edition.

Practicing Law Institute. 1976. *Industry and the Environment.*

Practicing Law Institute. 1975. *Land Use and Environmental Controls.*

"Recent Environmental Developments in Maritime and Offshore Activities." 1972. 9 *Houston Law Review* 655.

RPC Services, Inc. 1977. *Texas Natural Resource Reporter.* Austin, Texas: RPC Services, Inc.

Skehan. 1959. "The Port Authority," 1959 *University of Illinois Law Forum* 53.

Southwestern Reporter, 2d Series. 1977. St. Paul, Minnesota: West Publishing Company.

Teclaff. 1970. "The Coastal Zone – Control Over Encroachment into the Tidewaters," 1 *Journal of Maritime Law* 2.

Texas Jurisprudence, Second edition. 1963. San Francisco, California: Bancroft-Whitney Company; Rochester, New York: The Lawyers Cooperation Publishing Company.

Texas. Advisory Commission on Intergovernmental Relations. 1976. *Solving Texas Housing Problems: An Intergovernmental Approach.* Austin, Texas.

Texas. General Land Office. 1975. *Present Authority: Authority of Governmental Entities in the Texas Coastal Zone.* Austin, Texas.

Texas. General Land Office. 1976. *Current Permitting Processes in State and Federal Natural Resource Agencies* (2 vols.), Austin, Texas.

Texas. Law Institute of Coastal and Marine Resources. 1972. *Summary of Selected Legislation Relating to the Coastal Zone.* Austin, Texas.

Texas. Secretary of State. 1977. *Texas Register.* Austin, Texas.

Texas. State Bar of Texas. 1977. *Institute, 1977, Texas Environmental Law.* Austin, Texas.

Texas. State Bar of Texas, Professional Development Program. 1975. *Environmental Law Conference.* Austin, Texas.

United States Code Annotated. 1977. St. Paul, Minn.: West Publishing Company.

United States Government Printing Office. 1977. *Texas Register,* Austin, Texas.

United States Supreme Court Reports. 1977. St. Paul, Minn.: West Publishing Company.

Vernon's Annotated Revised Civil Statutes of the State of Texas. 1977. St. Paul, Minn.: West Publishing Company.

Ports, Waterways, and Canals

Atturio, J. M., D. R. Basco, and W. P. James. 1976. *Shoaling Characteristics of the Gulf Intracoastal Waterway in Texas.* Ocean Engineering Program. Texas A&M University, Sea Grant Program. TAMU-SG-76-207.

Bhattacharya, S. K. and A. N. Biswas. 1973. "Evaluation of Harbor Deepening Projects." *Journal of the Waterways, Harbors and Coastal Engineering Division,* Proceedings of the American Society of Civil Engineers. American Society of Civil Engineers.

Etter, W. E. and R. C. Graham. 1974. *Financial Planning for the Texas Port System.* College Station: Texas A&M University.

Harvard University Graduate School of Business Administration. 1966. *Inland Waterways Transportation.* Cambridge, Mass.: Baker Library.

Kearny, A. T., Inc. 1974. *Domestic Waterborne Shipping Market Analysis.* Prepared for Maritime Administration, U.S. Department of Commerce.

Liou, Y. C. and J. B. Herbich. 1976. *Sediment Movement Induced by Ships in Restricted Waterways.* Ocean Engineering Program. Texas A&M University, Sea Grant Program. TAMU-SG-76-209.

Marshall, J. L. 1973. *Industrial Water Use in the Texas Coastal Zone.* The University of Texas at Austin: Center for Research in Water Resources. Technical Report EHE-73-03, CRWR-101.

McFarland, F., et al. 1976. *Coastal Inland Canals.* Interim Report (Draft). Prepared for the General Land Office Coastal Zone Management Program. Texas A&M University.

Panel on Future Port Requirements. 1976. *Port Development in the United States.* Report prepared by the Panel on Future Port Requirements of the United States, Maritime Transportation Research Board, Commission on Sociotechnical Systems. Washington, D.C.: National Academy of Sciences.

Ray, W. W. 1970. *Selection of Significance to the Urban and Regional Planner of Ports and Hinterlands.*

Richards, R. R. 1976. *Public Port Financing in Texas.* College Station: Texas A&M University, Center for Marine Resources.

San Francisco Department of City Planning. 1975. *Land Use: Conditions and Trends, Report Containing Background Information for the Commerce and Industrial Element of the Comprehensive Plan of San Francisco.*

San Francisco Department of City Planning. 1975. *Industrial Trends: Report Containing Background Information for the Commerce and Industrial Element of the Comprehensive Plan of San Francisco.*

Schenker and Brockel. 1974. *Port Planning and Development as Related to Problems of U.S. Ports and the U.S. Coastal Environment.* Cambridge, Md.: Cornell Maritime.

Takel, R. E. 1974. *Industrial Port Development.* Bristol: Scientechnica.

Texas A&M University. 1975. *Analysis of the Role of the Gulf Intracoastal Waterway in Texas.* Presented by Texas Ports Association and Texas Coastal and Marine Council. Texas A&M University, Sea Grant Program. TAMU-SG-75-202.

Texas A&M University. 1977. *Texas Ports Fact Book.* College Station: Texas A&M University, Center for Marine Resources.

Texas. Coastal and Marine Council. 1977. *Marine Commerce.* Austin, Texas.

Texas. State Department of Highways and Public Transportation. 1976. *The Gulf Intracoastal Waterway in Texas, 1976.* Presented in response to the Texas Coastal Waterway Act of 1975 and submitted to the 65th Session of the Texas Legislature. Summary. Texas Department of Highways and Public Transportation, Transportation Planning Division.

U.S. Comptroller General. November, 1975. *Factors to be Considered in Settling Future Policy for Use of Inland Waterways.* Report to the Congress by the Comptroller General of the U.S.

U.S. Department of the Army. 1957. *Gulf Intracoastal Waterway, Guadalupe River, Texas.* (Revised, Definite Project Report.) Corps of Engineers, Galveston District.

U.S. Corps of Engineers. 1969. *The Ports of Freeport, Port Isabel, and Brownsville, Texas.* Port Series No. 26 (Revision 1969), Part 2. Prepared by the Board of Engineers for Rivers and Harbors, Corps of Engineers, U.S. Army.

U.S. Corps of Engineers. 1975. *Waterborne Commerce of the United States, Part 2, Waterways and Harbors, Gulf Coast, Mississippi River System and Antilles.* Department of the Army, Corps of Engineers.

U.S. House of Representatives. 1972. *Ports and Waterways Safety Act of 1972.* 92nd Congress, 2nd Session. U.S. House of Representatives, Conference Report.

Waugh, R. G. November, 1975. "Evaluating Costs for Port Distribution Systems," *Journal of the Waterways, Harbors, and Coastal Engineering Division.* American Society of Civil Engineers.

Socioeconomics

Applebaum, R. P. 1970. *Theories in Social Change.* Chicago: Markham Publishing Co.

Houston-Galveston Area Council. 1971. *Regional Atlas.* Houston, Texas.

Houston-Galveston Area Council. 1975. *State of the Region.* Houston, Texas.

Houston-Galveston Area Council. 1976. *1975 Census Tract Land Use, Brazoria County, Texas.* Unpublished data.

Parson, Talcott. 1966. *Societies.* Englewood Cliffs, N.J.: Prentice-Hall, Inc.

Research and Planning Consultants, Inc. 1977. *Offshore Oil:/Its Impact on Texas Communities.* Prepared for Texas Coastal Management Program. General Land Office of Texas. Austin, Texas.

Shields, Mark A. 1975. "Social Impact Studies: An Expository Analysis." *Environment and Behavior.* Vol. 7, No. 3. New York: Sage Publications, Inc., September 1975, pp. 265-284.

Texas Municipal League. 1976. *Texas Municipal Taxation and Debt.* 1975-1976. Austin: Texas Municipal League.

Texas. Department of Agriculture and U.S. Department of Agriculture. 1973. *Texas County Statistics.* Compiled by Texas Crop and Livestock Reporting Service.

Texas. Education Agency. 1976. *1973-1974 Annual Enrollment Figures.* Austin, Texas.

Texas. General Land Office. 1976. *Outer Continental Shelf Oil and Gas Development, Natural Resource, Socio-economic, and Demographic Inventory of the Texas Coastal Area.* The Coastal Management Program.

Texas. Office of the Governor. 1973. *A Conceptual Report – Economic Development in the Texas Coastal Zone.* Coastal Resources Management Program, Division of Planning Coordination, Governor's Office.

Texas. Parks and Wildlife Department. 1975. *Texas Outdoor Recreation Plan, Outdoor Recreation on the Texas Gulf Coast.* Texas Parks and Wildlife Department, Comprehensive Planning Branch.

Texas. Parks and Wildlife Department. 1975. *Texas Outdoor Recreation Plan, State Summary.* Texas Parks and Wildlife Department. Comprehensive Planning Branch.

U.S. Bureau of the Census. 1977. *Census of the Population, 1970.* U.S. Department of Commerce. Washington, D.C.: GPO.

U.S. Bureau of the Census. 1977. *County Business Patterns, 1974.* Washington, D.C.: GPO.

U.S. Executive Office of the President, Office of Management and Budget. 1972. *Standard Industrial Classification Manual.* Washington, D.C.: GPO.

University of Texas at Austin. 1975. *Directory of Texas Manufacturers,* Volume I, Alphabetical, Geographical, and Organizational Reference Listings, and Volume II, Product Listings. Bureau of Business Research.

University of Texas at Austin. 1975. *Texas Industrial Expansion.* Vol. 25, No. 10. Bureau of Business Research.

University of Texas at Austin. 1976. *Atlas of Texas.* Bureau of Business Research.

University of Texas at Austin. 1973. *Population Projections for Texas Counties: 1980-2020.* Austin, Texas: Population Research Center.

Vlachos, W. B., W. J. Filstead, S. E. Jacobs, M. Marunjama, J. H. Peterson, Jr., G. Willcke. 1975. *Social Impact Assessment: An Overview.* A report submitted to the U.S. Army Engineer Institute for Water Resources, Fort Belvoir, Virginia.

Wallace, A. F. C. 1970. *Culture and Personality* New York: Random House, 2nd edition.

Wolf, C. P. (ed.). 1974. *Social Impact Assessment.* Milwaukee: Environmental Design Research Association, Inc.

Bibliographies

Bascom, S., et al. 1975. *Secondary Impacts of Transportation and Waste Water Investments: Review and Bibliography.* EPA-600/5-75-002.

Chisholm, J. 1976. *Public Participation in Environmental Policy, An Annotated Bibliography.* Council of Planning Librarians Exchange Bibliography No. 1163.

Cordell, H. D. 1976. *The State of the Art in Developing and Operating Intensive Use Natural Resource Recreation Sites.* Council of Planning Librarians Exchange Bibliography No. 1072.

Erickson, D. L. 1976. *Public Involvement in Natural Resource Planning and Decision Making.* Council of Planning Librarians Exchange Bibliography No. 1097.

Gunn, C. 1969. *Annotated Bibliography of Resource Use, Texas Gulf Coast.* Texas A&M University, Interagency Natural Resources Council of Texas and the National Science Foundation, Sea Grant Publication No. 204.

Hopkins, S. H. 1973. *Annotated Bibliography on Effects of Salinity and Salinity Changes on Life in Coastal Waters.* U.S. Army Engineer Waterways Experiment Station.

Ingram, W. M. and P. Doudouroff. 1953. *Selected Bibliography of Publications on Industrial Wastes Relating to Fish and Oysters.* U.S. Department of Health, Education and Welfare, Public Health Services Bibliography Series No. 10.

Ingram, W. M. 1957. *Handbook of Selected Biological References on Water Pollution Control, Sewage Treatment, Water Treatment.* U.S. Department of Health, Education, and Welfare, Health Service, Bibliography Series No. 8.

Jenks, B., J. Sorenson, and J. Breadon. 1976. *Coastal Zone Bibliography.* University of California. Institute of Marine Resources. La Jolla, California. Sea Grant Publications No. 49.

Livingston, R., Jr. 1965. *A Preliminary Bibliography with KWIC Index on the Ecology of Estuaries and Coastal Areas of the Eastern U.S.* U.S. Fish and Wildlife Service Special Scientific Report, Fisheries No. 507.

Morrison, D. E. 1975. *Energy: A Bibliography of Social Science and Related Literature.* New York: Garland.

Research and Planning Consultants, Inc. 1976. *Outer Continental Shelf Oil and Gas Development: An Impact Bibliography.* Austin, Texas.

Sherk, J. A., Jr. and L. E. Cronin. 1970. *The Effects of Suspended and Deposited Sediments on Estuarine Organisms.* An Annotated Bibliography of Selected References. University of Maryland Natural Resource Institute Publication 70-19.

Starbuck, J. C. 1976. *Recent Articles on Office and Industrial Parks.* Council of Planning Librarians Exchange Bibliography No. 1101.

Stevens, B. H. and C. A. Brachett. 1967. *Industrial Location: A Review and Annotated Bibliography of Theoretical, Empirical and Case Studies.* Bibliography Series No. 3. Philadelphia: Regional Science Research Institute.

U.S. Environmental Protection Agency. 1976. *Environmental Management Research, Annotated Bibliography, Publications and Active Projects.* Comprehensive Planning and Land Use Staff, Media Quality Management Division, Office of Air, Land and Water Use. Office of Research and Development. Washington, D.C.

Vance, M. (ed.). February, 1976. *New Publications for Planning Libraries.* Council of Planning Libraries, Exchange Bibliography No. 22. Monticello, Illinois.

Viohl, R. C., Jr. and K. Mason. 1974. *Environmental Impact Assessment Methodologies: An Annotated Bibliography.* Monticello, Illinois: Council of Planning Librarians Exchange Bibliography No. 691.

Worsham, J. 1976. *Water Transportation and Inland Waterways Information: Basic Considerations.* Council of Planning Librarians Exchange Bibliography No. 1168.