cee jay frederick associates
environmental planning and design consultants · 103 s. high street, west chester, pennsylvania 19380 · tel: 215 · 431 · 7899

SPECIFICATIONS FOR RECREATION AREA

SITE WORK

TULLYTOWN BOROUGH PARK
Borough of Tullytown
Bucks County, Pennsylvania

TULLYTOWN BOROUGH COUNCIL

Coastal Zone
Funded and Coordinated through
Dept. of Environmental Resources
Office of Resources Management
Coastal Zone Management Office

CEE JAY FREDERICK ASSOCIATES
Environmental Planning & Design Consultants
103 South High Street
West Chester, Pennsylvania 19380

GV
182.3
.S64
1982

21, 1982

AUTHENTICATED
U.S. GOVERNMENT
INFORMATION
GPO

GV182.3 .S64 1982 c.1

SPECIFICATIONS FOR RECREATION AREA

SITE WORK

TULLYTOWN BOROUGH PARK
Borough of Tullytown
Bucks County, Pennsylvania

TULLYTOWN BOROUGH COUNCIL

CEE JAY FREDERICK ASSOCIATES
Environmental Planning & Design Consultants
103 South High Street
West Chester, Pennsylvania 19380

December 21, 1982

The preparation of this report and the accompanying drawings were financed through the Pennsylvania Coastal Zone Management Program under the provisions of the Federal Coastal Zone Management Act of 1972, (as amended), administered by the Division of Coastal Zone Management, Bureau of Water Resources Management, Pennsylvania Department of Environmental Resources.

SPECIFICATION OUTLINE

	PAGE NO.
Title Page	
Table of Contents	TC-1
Instructions to Bidders	IB-1 to IB-9

DIVISION I

General Conditions	GC-1
Supplemental General Conditions	SG-1 to SG-17
Application and Certificate for Payment Form	
Payroll Form	
Construction Sign	
Prevailing Labor Wage Rates	

DIVISION II - GENERAL REQUIREMENTS

Section 2A - General Requirements	GR-1 to GR-2
Section 2B - Demolition	SW-1 to SW-2
Section 2C - Earthwork	SW-3 to SW-6
Section 2D - Paving	SW-7 to SW-11
Section 2E - Concrete	SW-12 to SW-14
Section 2F - Site Drainage	SW-15 to SW-16
Section 2G - General Site Improvements	SW-17 to SW-21
Section 2H - Lawns and Planting	SW-22 to SW-28
Section 2I - Fencing	SW-29 to SW-31
Section 2J - Park Structure	SW-32 to SW-35

INSTRUCTIONS TO BIDDERS

IB-1 INVITATION: Sealed Proposals will be received by the Borough of Tullytown at the Borough Hall until (TIME) (prevailing time) on (DATE). At the (DATE) scheduled Borough Council Meeting said proposals will be opened and publicly read for Site Work for Tullytown Borough Park located at the site of the existing Borough Hall on Main Street, Tullytown Borough, Bucks County, Pennsylvania.

Bid and Bid Guarantee shall be enclosed in a heavy sealed envelope which shall be addressed to the Borough of Tullytown, Pennsylvania marked on the outside:

"Bid for Tullytown Borough Park Site Work."

The Borough of Tullytown shall decide when the aforesaid specified time has arrived.

IB-2 DESCRIPTION OF WORK: Bids will be received and contract let for the work herein specified as follows:

Demolition of existing materials, removal of all debris, grading, drainage, installation of new play equipment, a park shelter including rest rooms, fencing, construction of walls, picnic and sitting areas, a play area, a basketball court, softball field, paving, curbing, seeding and other related work, etc.

IB-3 PROPOSAL SECURITY: Each proposal must be accompanied by a Certified Check, Bank Cashier's Check, Trust Company Treasurer's Documents, executed by a corporate surety qualified to do business in the State of Pennsylvania satisfactory to the Borough in an amount not less than ten (10) percent of the Base Bid. Checks or Bid Bonds shall be made payable to the Borough of Tullytown (hereinafter sometimes referred to as the "Owner") as payee or obligee, and shall be submitted with the understanding that it shall guarantee that the bidder, if his bid is accepted, will enter into a formal Contract with the Owner; that the required Contract Bond, in the form prescribed in the Contract Documents, will be given; that the required evidence of insurance coverage will be supplied; and that in the event of failure to enter into said Contract and give said Bond or evidence of required insurance coverage within ten (10) days after he has received notice of the acceptance of his bid, the Owner may retain the proceeds of such check as liquidated damages or proceed on such Bond for such damages by reason of such failure.

The Bid Bonds or checks will be returned to all except the three (3) lowest bidders within ten (10) days after the formal opening of bids. The Bid Bond or check of each of the three (3) lowest Bidders will be returned within 48 hours after the Owner and Contractor have executed the Contract and the executed Contract Bond has been approved by the Owner. No interest will be allowed upon guarantee checks.

IB-4 PREPARATION AND SUBMISSION OF PROPOSALS: Bound herewith is a complete set of bid proposal forms. These are not to be detached nor executed, but are for reference only. Estimated quantities contained thereon are to be regarded as estimates only. Bids must be responsive to actual quantities shown on the plans. Owner assumes no responsibility with regard to accuracy of estimated quantities and Bidders are forewarned that these figures will not form the basis of an eventual contract for construction. Similarly, Owner is not responsible for bids that are too high, based upon estimated quantities. Three separate copies of the Form of Proposal are furnished loose within the cover of the Specifications for the use of the Bidder. TWO (2) copies shall be submitted with the bid, and one retained by the Bidder. Both copies of the proposal submitted must be properly signed in ink and all blanks filled in with type or ink. No proposal will be considered which is submitted otherwise than upon the Form of Proposal or on an exact copy thereof. The sealed envelope shall contain the name of the Bidder, his address and name of the project.

All amounts shall be written out in full as well as stated in figures. If a discrepancy occurs, the lower amounts shall govern.

Each Bidder shall tabulate all the information pertaining to his equipment and materials that is requested. These tabulations form a part of the Bidder's proposals, and failure to furnish this tabulated information may be taken as sufficient grounds for the rejection of the bid.

No Contract will be awarded to a Bidder who is a foreign corporation or is operating under a fictitious name, unless he has complied with the propoer registration under the laws of the State of Pennsylvania.

The following stipulations and descriptions of materials described and defined as "Specifications" and the "Advertisement," "Contract," "Qualifications for Work," "Unit Prices." "Bid Form," "Form of Bond," "Addenda," and "Instructions to Bidders," together with the Drawings, shall be accepted by the parties submitting bids and must be signed by the parties of the Contract. They are hereby declared and made part of the Contract and Bond required for the execution of the work herein contemplated and required.

Attention is particularly called to the importance of filling out all Alternates, if any, included in the Specifications and Addenda and the amount to be added to or deducted from the base bid for each. The Borough of Tullytown may base a Contract upon the possible inclusion or exclusion of any or all such Alternates.

Erasures, alterations or other changes in the bid must be explained or noted over the signature of the Bidder.

The firm, corporation, or individual name of the bidder must be signed in the space provided for the signatures on the proposal blanks. In the case of a corporation, the title of the officer signing must be stated, and such officer must be thereunto duly authorized. In the case of a partnership, the

signature of at least one of the partners must follow the firm name, using the term "member of firm." In the case of an individual, use the term "doing business," or "sole owner."

IB-5 DEFINITIONS:

"Owner" shall mean the party of the first part of this contract and is the Borough of Tullytown, Pennsylvania.

"Environmental Designer or Owner's Representative" shall mean the firm of Cee Jay Frederick Associates, Environmental Planning and Design Consultants, 103 South High Street, West Chester, Pennsylvania.

"Contractor" shall mean the party of the second part of this contract, acting directly or through his/her or its legal representative(s) or agents.

"Sub-Contractor" shall mean persons, firms or corporations having a direct contract with the Contractor, and those who contract to furnish labor or labor and materials at the site of the project.

"Plan" shall mean the numbered contract drawings which accompany the Specifications and show the permanent work to be constructed, and such detail and explanatory drawings as may be furnished from time to time during the progress of the work.

Wherever in this contract or specifications the words "directed," "required," "permitted," "ordered," "designation," "prescribed," or words of like import are used, it shall be understood that the direction, requirement, permission, order, designation, or prescription of the Environmental Designer is intended; and, similarly, the words "approved," "acceptable," "satisfactory," or words of like import shall mean approved by or acceptable to the Environmental Designer.

IB-6 WITHDRAWAL OF BIDS: Bidders may withdraw a proposal after it has been received by the Owner, provided such request in writing is received by the Owner prior to the time of the bid opening. Negligence on the part of the Bidder in preparing his bid confers no right of withdrawal or modification of his bid after such bid has been opened. No claims on account of mistakes or omissions in any bid will be considered.

No bid may be withdrawn for a period of sixty (60) days from the date of bid opening.

IB-7 CONSIDERATION OF PROPOSALS: Competency and responsibility of bidders, their facilities, experience in similar work, and that of their proposed Sub-Contractors, and amounts of alternates will be considered in making awards, as well as costs. Bids from parties not regularly and practically engaged as Contractors for the scope and class of work bid upon, may be rejected at the discretion of the Owner.

Each bidder shall submit with the proposal, a list of installations made by him, comparable to this project.

No bid will be accepted from, or a Contract awarded to, any party, nor will any surety or bonding corporation be accepted as surety, who, or which, is in default upon any Contract or other obligation to the State, or to this or any other municipality. Failure of any bidder to have completed a previous Contract will be considered evidence of irresponsibility.

Two proposals from a firm, or a corporation under a different name will not be considered. Reasonable grounds for supposing that any bidder is interested in more than one proposal for this work will be the cause for the rejection of all proposals in which he has been interested. Any or all proposals will be rejected if there is a reasonable ground for supposing that there is collusion among the bidders, and all participants in such collusion will receive no further recognition for this work.

IB-8 REVISIONS: The Borough of Tullytown reserves the right to delete items, change quantities, and make revisions, in which event the final price will be determined by the Unit Price of the Schedule. Where applicable, the contractor shall be paid only for the part or parts of the work actually performed at the prices contracted for and shall make no claim for damage, anticipated profits, or loss of profit on account of such damage or omission.

IB-9 AWARD OF CONTRACT OR REJECTION OF BIDS: The Contract, if awarded, will be to the lowest responsbile Bidder complying with conditions of the Invitation for Bids, provided his bid is reasonable and it reserves the right to reject any and all bids or parts thereof or items therein, and to waive any informality in bids received whenever such rejection or waiver is in the interest of the Owner. The Owner also reserves the right to reject the bid of a Bidder who has previously failed to perform properly or complete on time contracts of a similar nature, or a bid of a Bidder who is not in a position, in the opinion of the Owner's Representative, to perform the Contract. It is expected that the Owner will study the Bidder's qualifications and award the Contract within forty-five (45) days after the bid opening.

IB-10 EXECUTION OF CONTRACT: The individual, firm or corporation to whom the Contract has been awarded will be notified ten (10) days in advance of the date, time and place for the signing of all documents. This is to allow the Contractor time to have the Contract Bond executed and to secure the necessary insurance certificates.

The failure of any successful Bidder to execute such Contract and to supply the required Contract Bond and the evidences of required insurance coverage within ten (10) days after the prescribed forms are presented for signature, or within such extended period as the Owner may grant based upon reasons determined adequate by the Owner shall constitute a default, and the Owner may either award the Contract to the next responsbile Bidder or re-advertise for bids.

IB-11 BIDDER'S RESPONSIBILITY: Bidders should visit the site and shall be responsible for having ascertained the surface and sub-surface conditions likely to be encountered and other pertinent local conditions, such as locations, accessibility, general character of the site, the character and extent of existing work within or adjacent to the site and any other work being performed thereon at the time of the submission of his bid. Each Bidder shall carefully examine the Contract Documents, including the Advertisement, Instructions to Bidders, and all other forms and documents pertinent to the work contemplated. It will be assumed that he has satisfied himself as to the conditions to be encountered, the character, quality and quantities of work to be performed and materials to be furnished and the requirements of the Contract Documents. No allowance or concessions will be made for lack of such information on the part of the Contractor.

IB-12 QUESTIONS REGARDING DRAWINGS AND SPECIFICATIONS:

Neither Owner nor Owner's Representative will be responsbile for verbal answers to inquiries or instructions by any person prior to the opening of proposals. Should any bidder be in doubt as to the intent of Drawings and/or Specifications, he should at once notify the Owner's Representative, who will send a written bulletin to all bidders covering the point in question, if required. Questions will not be answered if received after 1:00 p.m., five (5) calendar days before bid opening date. Failure of proper interpretation or making the necessary inquiry will be the Contractor's responsibility.

Before submitting bids, the bidder shall request of the Environmental Designer clarification or interpretation of any conflicting information between -

a. Drawings and Specifications
b. One Drawing to another
c. Two or more statements in the Specifications.

If such clarifications are not requested before bidding, the bidder shall be responsbile for doing such work, and furnishing such materials as necessary to comply with whichever interpretation of the Drawings and/or Specifications the Environmental Designer, during construction, judges to be proper.

Figure dimensions in all cases take precedence over measurements by scale, and figures on large scale and full size Drawings over figures on those drawn to a smaller scale.

The right is reserved by the Environmental Designer to correct any errors or omissions in said Drawings and/or Specifications wherever such corrections are necessary for the proper fulfillment of the intentions of the Drawings or Specifications. The Environmental Designer will hold a pre-bid conference prior to submission of bids to review the work and answer questions the bidders may have.

IB-13 EXTRA WORK: The Contractor shall not be paid for additional work not included in the plans and specifications or changes in the work involving extra cost unless ordered in writing by the Environmental Designer at unit prices; and if not, then at a price agreed upon in advance. Any extra materials or work furnished without such authorization shall be at the Contractor's expense.

IB-14 BULLETINS: It shall be understood that any bulletins issued from time to time to furnish additional information to the bidders shall become an integral part of these Specifications. Receipt of bulletins shall be acknowledged by the bidders on the "Form of Proposal."

IB-15 PERFORMANCE BOND AND MAINTENANCE BOND: Within fourteen (14) days after award of Contracts, successful bidders shall obtain, pay for, and deliver to the Owner:

a. A performance bond of 100% of the Contract sum, satisfactory to the Owner, and executed by a surety company licensed to do business in the State of Pennsylvania. Such bond shall be in the form of a Pennsylvania statutary bond, and shall bear same date as, or dates subsequent to, the date of the Contract. Said bond shall assure fulfillment of Contract, in all its provisions, including any additions, deductions, or other modifications to the Contract, or full reimbursement to the Owner for all expenses incurred by him in making good any default. This bond shall also contain a waiver of notice for alterations, additions, deductions, extension of time, or other modifications of Contract as ordered.

b. A Labor and Material Payment Bond in the full amount of the Contract Price for the use of any and every person, co-partnership, association or corporation interested, conditioned for the prompt payment of all material furnished, equipment rented, services rendered, and labor supplied or performed in the execution of the work whether or not the said material or labor enter into and become component parts of the work or improvement.

c. A Maintenance Bond in the sum of at least ten percent (10%) of the Contract Amount as surety against defective or inferior materials or workmanship which in the judgement of the Owner may develop during the period of one (1) year from the date of completion and acceptance of the work performed under the Contract, as described under the heading "Guarantee Work" included herein.

The cost of the Contract Bond shall be included in the Contractor's Bid.

IB-16 DIRECTIONS FOR PREPARATION OF PERFORMANCE AND LABOR AND MATERIALMEN'S BONDS:

a. Individual sureties, partnerships, or corporations not in the surety business will not be acceptable.

b. The name of the Principal shall be shown exactly as it appears in the Contract.

c. The penal sum shall be not less than that required by the Instructions to Bidders.

d. If the Principals are partners, or joint ventures, each member shall execute the bond as an individual, with his place of residence shown.

e. If the Principal is a corporation, the bond shall be executed under its corporate seal. If the corporation has no corporate seal the fact shall be stated, in which case a scroll or adhesive seal shall be affixed following the corporate name.

f. The official character and authority of the person(s) executing the bond for the Principal, if a corporation, shall be certified by the secretary or assistant secretary thereof under the corporate seal, OR there may be attached copies of so much of the records of the corporation as will evidence the official character and authority of the officer signing, duly certified by the secretary or assistant secretary, under the corporate seal, to be true copies.

g. The current Power of Attorney of the person signing for the surety company must be attached to the bond.

h. The date of the bond must NOT be prior to the date of the Contract.

i. The following information must be placed on the bond by the surety company:

   (1) The rate of premium in dollars per thousand; and
   (2) The total dollar amount premium charged.

j. The signature of a witness shall appear in the appropriate place, attesting to the signature of each part to the bond.

k. Type or print the name underneath EACH SIGNATURE appearing on the bond.

l. An executed copy of the bond must be attached to each copy of the Contract (original counterpart) intended for signing.

IB-17 COMPLIANCE WITH ALL LAWS: The Contractor shall keep himself informed and shall comply with all Federal, State and Local Laws or ordinances, such as may apply. Special attention is called to paragraphs under Public Liability and Property Damage Insurance, Workmen's Compensation Insurance, Social Security Act, Labor-Employment-Unemployment-Wages, Hours, and Assignment of Contract.

IB-18 PAYMENTS: Payment to the Contractor will be made as provided for in General Conditions and Division I Supplementary General Conditions.

IB-19 WORK AREA PROVIDED: The Contractor shall select areas for receipt and storage of materials and equipment if necessary in connection with his/her operation. Such areas are to be approved by the Environmental Designer prior to moving material or supplies to the location. Upon completion of the work under this contract such material and equipment shall be removed, and the property restored to a condition satisfactory to the Environmental Designer.

IB-20 START OF WORK AND TIME OF SUBSTANTIAL COMPLETION:

The execution of the Contract by the Owner constitutes the notice to commence work. Any work performed prior to the date of said notice will be at the Contractor's sole insistence and expense. The Bidder shall start work on or before ten (10) days from the date the Contract is executed.

Time is an essential consideration of the Contract. Work shall progress with a proper and sufficient force of workmen, and ample supply of materials (to the satisfaction of the Owner's Representative) to insure substantial completion of the work no later than (DATE).

IB-21 SUBSTANTIAL COMPLETION OF WORK DEFINED: Completion of the herein specified work is defined as that stage when the installations and appurtenant equipment included under this Contract have been completed and tested, and are, together, ready for continuous permanent use and occupancy for the purpose intended. After this date, there may still remain some cleaning up of Contractors' plant or other minor work, which does not prevent permanent use of the plant and accessories.

IB-22 FINAL COMPLETION DEFINED: Final completion is the point at which all provisions of the Contract, including the "Punch List" items are complete and accepted by the Owner and Owner's Representative. The date of Final Completion shall be the date the Final Certificate for Payment is approved by the Owner.

IB-23 LIQUIDATED DAMAGES: The Contractor shall pay to the Borough of Tullytown by way of liquidated and ascertained damages, and not as a penalty, the sum of $50.00 per calendar day for each and every day on which there is a delay beyond the date named for a substantial completion of the Contract, to compensate the Borough for loss sustained by reason of inability to enter into possession and on account of failure to complete the Contract and such sums shall be deducted from any monies which may be due, or become due thereon.

IB-24 EXTENSION OF TIME: Should the Contractor be delayed in the prosecution or completion of the work for which the Contractor is responsbile, by the act, neglect, or default by the Owner, Owner's Representative, or any other Contractor employed by the Owner under the work, or any damage caused by fire, or other casualty, or by the combined action of workmen, in no way

caused by or resulting from default or collusion on the part of the Contractor (burden of proof being the Contractor's) or abnormal weather conditions, then the time fixed for completion of the work will be extended for a period equivalent to the time lost by reason of any or all of the causes aforesaid, which extended period shall be determined and fixed by the Owner's Representative, but no such allowance will be made unless a claim therefore is presented in writing to the Owner's Representative within forty-eight (48) hours of the occurrence of such delay, and then only when approved in writing by the Owner's Representative.

IB-25 EXTENSION OF TIME NOT A WAIVER: Any extension of time beyond the date fixed for completion or the doing and acceptance of any part of the work called for by the Contract, or the occupancy of the site in whole or in part prior to the date of completion, shall not be deemed a waiver by the Owner of its right to annul or terminate the Contract for abandonment or delay in the manner provided for by the terms of the Contract, nor relieve the Contractor from full responsibility.

IB-26 AS-BUILT DRAWINGS: Contractor shall provide himself with a set of blue line prints of the Contract Drawings for the purpose of keeping a complete record of all installations of work as actually installed and shall indicate all deviations from the contract drawings.

Upon completion of the work, the Contractor shall provide one set of reproducible drawings with all the above information thereon. All costs of drafting shall be borne by the Contractor.

IB-27 STATE OR FEDERAL TAXES: The Contract prices for articles, materials, or equipment named herein are subject to increase by the amount of any additional tax or taxes affecting the articles, materials, or equipment involved in the Contract imposed by or under the authority of the Federal or State government, and passed or taking effect after the receipt of bids, and shall continue in effect during such time as such tax or taxes are lawfully collectible; provided, however, that, in the event of such increase of cost, the claim must be presented within thirty (30) days, supported by evidence of such additional tax, satisfactory to the solicitor for the Borough of Tullytown.

IB-28 DEPOSIT FOR PLANS AND SPECIFICATIONS: Plans and specifications may be reviewed free of charge at the office of the Borough Secretary or Environmental Designer and such other places as may be designated.

Plans and Specifications may be secured at the Borough Office by payment of Thirty Dollars ($30.00) per set, which is not refundable.

IB-29 TAXES: The Owner is exempt from payment of Federal Excise Tax and Pennsylvania Sales Tax and no such tax need be included in this Bid. Contractors and Sub-Contractors may prepare exemption certificates and present them to the Owner for execution. All taxes other than those mentioned herein shall be paid by the Contractor. The Contractor shall contact the Borough Secretary to obtain all information on tax exemption for the Owners.

GC-1 THE GENERAL CONDITIONS: The General Conditions of this Contract is the American Institute of Architects' Standard Document No. A201, "General Conditions of the Contract for Construction," April 1976 Edition and herinafter referred to as the "AIA General Conditions," which document is hereby specifically made a part of the Contract Documents with the same force and effect as though set forth in full. Copies of the General Conditions of the Contract, if not attached hereto, are on file and may be referred to at the office of the Environmental Designer.

DIVISION I

SUPPLEMENTARY GENERAL CONDITIONS

SG-1 INTENT: The GENERAL CONDITIONS OF THE CONTRACT, Standard Form A-201, April 1976 Edition, of the American Institute of Architects, together with the paragraphs that follow which amend or supplement the standard document in part, or the additional paragraphs thereto as titled are hereby made a part of these specifications and shall apply to all Contractors and Subcontractors. Should any discrepancy become apparent between the General Conditions and these Supplementary General Conditions, the requirements of the latter shall take precedence.

The General Conditions and Supplementary General Conditions, for convenience, are stated only once, and shall hereinafter be referred to as the "General Conditions." They shall be deemed an integral part of each separate Section of the Specifications and all Contracts to the same extent as though they were quoted in full therein.

SG-2 SCOPE: The Project Specifications relate generally to the construction of the entire project entitled Specifications for Recreation Area Site Work/Tullytown Borough Park, Borough of Tullytown, Pennsylvania.

The Specifications require the furnishing of all labor, materials, plants, equipment, tolls, trucking, superintendence and services necessary, or proper, for, or incidental to, the above construction, as specified, herein, and shown on the Contract Drawings. All work shown on the Contract Drawings even though not expressly mentioned in the specifications, and all work mentioned in the specifications even though not shown on the Contract Drawings but involved in carrying out their intent and in the complete and proper execution of the work, are required by these contract documents; and the Contractor shall perform the same as though they were specifically delineated, described and mentioned.

SG-3 CONTRACT DOCUMENTS (Supplementing Art. 1)
Delete Paragraph 1.1.3 as written and substitute the following:

1.1.3 - The Term "Work" as used herein refers to work normally done at the location of the project, or to that done in shops remote from the site and includes all plant, labor, materials, supplies, equipment and other facilities and things necessary, or proper, for, or incidental to, the carrying out and completion of the terms of this Contract.

The term "Extra Work" as used herein, refers to and includes work required by the Owner, which, in the judgment of the Environmental Designer and/or Owner involves changes in, or additions to, that required by the Drawings and/or Specifications and Addenda at the time of signing of the Contract.

B. Paragraphs 1.2 - Execution, Correlation, Intent and Interpretations:

Add the following subparagraphs:

1.2.5 - Words in the singular shall include the plural wherever the context so indicates; and, if plural shall indicate the singular if so connoted.

1.2.6 - Where words "Shown" or "Shown on drawings" are used in the specifications, they shall be construed to mean "noted," "indicated," "scheduled," "detailed," or any other diagrammatic or written reference made on the drawings.

1.2.7 - The use of the words "provide" or "provided" is intended to mean "furnish(ed) and install(ed)" and/or "connect(ed)," unless specifically indicated otherwise in the specifications.

1.2.8 - Where the words "equal" or equivalent" are used, each shall be construed to mean being same in value, measure, force, effect or significance, and corresponding in position and function, subject to the approval of the Owner's Representative.

1.2.9 - The terms "approved" or "approval" mean written approval of the Owner's Representative.

1.2.10 - The terms "Specifications" or "Specification" shall mean all matter contained in the bound volume so entitled and related documents thereto.

1.2.11 - The terms "directed," "required," "permitted," "ordered," "designated," "prescribed" and words of like import shall imply the direction, requirement, permission, order, designation or prescription of the Owner's Representative; and "approved," "acceptable," "satisfactory" and words of like import shall mean approved by, acceptable or satisfactory to the Owner's Representative and "necessary," "reasonable," "proper," "correct," and words of like import shall mean necessary, reasonable, proper, or correct in the judgment of the Owner's Representative.

1.2.12 - All necessary dimensions are given on the Drawings, which in all cases shall be strictly complied with. The figures in writing on Drawings, showing or indicating dimensions shall be taken instead of measurements by scale, and no measurements of Drawings by scale shall be used as a dimension to work by, except on full size detail drawings, not dimensioned.

C. Paragraph 1.3 - Copies Furnished and Ownership:

Amend sub-paragraph 1.3.1 to read as follows:

The Owner will furnish the Contractor, at cost, three (3) copies of the Contract Drawings and three (3) copies of the Specifications for the execution of the work.

SG-4 CONTRACTOR (SUPPLEMENTING ART. 4)

B. Paragraph 4.4 - Labor and Materials:

Add the following sub-paragraphs:

4.4.3 - The Contractor shall also furnish, erect and remove when no longer necessary or when directed to do so, necessary scaffolding including ladders, protection, hoists and other temporary structures or equipment for construction of work and shall furnish, erect and remove necessary shoring and be responsible for the safety and strength of same.

4.4.4 - All materials shall be of AMERICAN MANUFACTURE. Materials and workmanship, shall in every respect, be in accordance with the best modern practice and whenever the Contract Drawings, Specifications or directions of the Owner's Representative create a doubt as to what is permissible or fail to note the quality of any work, the interpretation which calls for the best quality of work is to be followed. Materials installed as part of the permanent construction shall be new materials, except as may otherwise be herein specifically required.

4.4.5 - Substitution of materials shall be made only by including the requested substitution in the list of materials required to be submitted to, and approved by, the Owner's Representative. After the approval of said list, no substitutions will be permitted, except that a brand or make named in the Specifications may be submitted for approval in lieu of a brand or make on said list.

4.4.6 - Manufactured materials shall be delivered in unbroken original packages, containers or bundles bearing the name of the manufacturer and the brand, and shall be stored above the ground and properly covered to protect them from moisture.

B. Paragraph 4.5 - Warranty:

Sub-paragraph 4.5.1 delete this paragraph in its entirety and insert the following:

4.5.1 - The Contractor shall deliver to the Owner's Representative

upon completion of all work under the Contract, his written guarantee, made out to the Owner, and in the form prescribed by the Owner, guaranteeing (and he does so guarantee) all the work under the contract to be free from faulty materials and to be watertight and leakproof in every particular and free from improper workmanship and against injury from proper and usual wear; and agreeing (and he does hereby agree) to replace or to re-execute without cost to the Owner, such work as may be found to be improper or imperfect and to make good all damage caused to work or materials due to such requirement, replacement or re-execution. This guarantee shall be made to cover (and does cover) a period of one (1) year from date of final completion of all work under the Contract, or for a longer period where so specifically stipulated under the various Sections of the Specifications.

4.5.2 - Neither the Final Certificate nor payment nor any provision in the Contract shall relieve the Contractor of responsibility for neglect or faulty materials or workmanship during the period covered by the guarantee.

C. Paragraph 4.6 - Taxes:

Add the following sub-paragraph.

4.6.2 - The Contractor shall accept exclusive liability and hold the Owner harmless for payments of social security taxes, unemployment insurance contributions, or other taxes measured by wages of employees attributable or performing the work herein mentioned or described and shall also be responsible for the payment of all applicable sales, excise, and gross receipts taxes.

D. Paragraph 4.7 - Permits, Fees and Notices:

Add to following sub-paragraph 4.7.3

4.7.3 - The Contractor shall obtain all permits for street opening or obstruction, otherwise necessary for his work and shall pay for all costs and fees for same. He shall also be responsible to make all arrangements for removal and relocation of existing utilities, as may be required.

E. Paragraph 4.9 - Superintendent

Sub-paragraph 4.9.1, delete this paragraph in its entirety and insert the following:

4.9.1 - At the site of the work, the Contractor shall employ a construction superintendent and such assistants as may be required who shall have full authority to act for the Contractor. It is understood that such representative shall be acceptable to the Owner and shall be such that can be continued in their respective

capacities for the entire job unless they cease to be on the Contractor's payroll.

Superintendent shall be present on the job site during working hours and he shall not be absent from the site or delegate his authority to another unless the other person has been previously listed as a person with full authority to act for the Contractor.

F. Paragraph 4.12 - Shop Drawings and Samples:

Add the following sub-paragraphs:

4.12.9 - For standard manufactured items in the form of manufacturers catalog sheet, eight (8) copies shall be submitted.

4.12.10 - Procedure for distribution shall be as follows:

(1) General Contractor shall submit the specified number of prints of same to the Environmental Designer mailed in an approved tube. Upon receipt, the Environmental Designer will stamp one of three ways:

(a) Approved.
(b) Approved for construction according to notations.
(c) Not Approved - Resubmit.

4.12.11 - If catalog cuts of standard manufactured items show different types, options, finishes, performance requirements, sizes or other variations, those features that the Contractor proposes to furnish shall be clearly indicated on each copy. If any variations from the catalog cuts are proposed or required such variations must be clearly noted on each copy by the Contractor.

SG-5 PAYMENTS AND COMPLETION (SUPPLEMENTING ART. 9)

A. Paragraph 9.3 - Application for Payment:

Add the following sub-paragraphs:

9.3.4 - In making such partial payments for the work, there shall be retained ten percent (10%) of the estimated amount until fifty percent (50%) of the contract is completed. The sum or sums withheld by the contracting body from the contractor after the contract is fifty percent (50%) completed shall not exceed five percent (5%) of the amount due the contractor on the remaining work, provided, however, that in the event a dispute arises between the contracting body and any prime contractor, which dispute is based upon increased costs claimed by one prime contractor occasioned by delays or other actions of another prime contractor, additional retainage in the sum of one and

one-half times the amount of any possible liability may be withheld until such time as a final resolution is agreed to by all parties directly or indirectly involved, unless the contractor causing the additional claim furnishes a bond satisfactory to the contracting body to indemnify such contracting body against the claim. However, all such moneys retained by the contracting body may be withheld from the contractor until substantial completion of the contract.

The Contractor shall submit his requests for payment in quadruplicate to the Owner's Representative.

B. Paragraph 9.9 - Final Payments:

Add the following sub-paragraphs.

9.9.6 - Within thirty (30) days after the acceptance of the work and the filing of certificates of completion, and posting of a Maintenance Bond the Owner shall pay to the Contractor the amount of the balance due him, less only 1 and ½ times such amount as is required to complete any then remaining, uncompleted, minor items, which amount shall be certified by the Owner's Representative and upon receipt by the contracting body of any guarantee bonds which may be required, in accordance with the contract documents, to insure proper workmanship for the guarantee period. All prior estimates and payments including those relating to extra work shall be subject to correction by this payment, which is throughout this Contract called "Final Payment."

SG-6 SUBCONTRACTORS (SUPPLEMENTING ART. 5)

A. Paragraph 5.1 - Definition:

Add the following sub-paragraph:

5.1.3 - The Owner and Owner's Representative will recognize the Contractor only, who will be held responsible for proper execution of the entire work under this Contract.

(a) Approval of Subcontractors in no way relieves Contractor and holds good only as long as Contract requirements are met; nor does approval permit subletting any part of a Subcontract. Should work, materials or parties prove objectionable, and should violations of Contract requirements exist and continue after Contractor has received reasonable warning, then upon request of Owner of Owner's Representative, such objectionable party shall be removed from the work and be excluded from the project and shops; and, the work continued by others who are satisfactory.

(b) The Owner reserves the right not to accept, or pay for, work executed by parties who have not been approved as above.

(c) Contractor shall deal with and require and enforce co-operation of Subcontractors in such manner as to most facilitate completion of the work as a whole. Transactions with Subcontractors will be made through Contractor only.

SG-7 PROTECTION OF PERSONS AND PROPERTY (SUPPLEMENTING ART. 10)

A. Paragraph 10.2 - Safety of Persons and Property:

Add the following sub-paragraphs:

10.2.8 - The Contractor and Subcontractors and persons in their employ shall comply with and be bound to the requirements of the "Safety and Engineering Practices" as set forth in the "Manual of Accident Prevention in Construction" as published in the Associated General Contractors of America, and with all other applicable state and local safety and sanitary laws, regulations and ordinances, and provide and properly maintain warning signs and lights, barricades, railings and other safeguards for the protection of workmen and others, on, about or adjacent to the work, as required by the conditions and progress of the work.

10.2.9 - Neither the Owner nor the Owners Representative shall be responsible for providing a safe working place for the Contractor, the Subcontractors or their employees, or any individual responsible to them for the work.

SG-8 INSURANCE (SUPPLEMENTING ART. 11)

A. Paragraph 11.1 - Contractor's Liability Insurance:

Add the following subparagraphs:

11.1.5 - The Contractor's Liability Insurance and Contractor's Contingent Liability Insurance shall be in amounts of not less than $300,000/$500,000 and the policy shall be endorsed to carry a rider to cover Property Damage Liability in amounts not less than $300,000/$500,000. The above shall also cover automobile and property damage insurance, including owned vehicles, hired vehicles and other non-owned vehicles. This covers all contractors and subcontractors on the project.

11.1.6 - The Contractor shall obtain, pay for and maintain separate "Owner's Protective Policy" in the same amounts as specified above for the Contractor's insurance, to protect the Owner from his contingent liabilities for damages which may arise from the Contractor's operations under this contract.

11.1.7 - Compensation Insurance: The Contractor shall procure and shall maintain during the life of this contract Workmen's Compensation Insurance as required by applicable State or territorial law

for all of his employees to be engaged in work at the site of the project under this contract and, in case of any such work sublet, the Contractor shall require the subcontractor similarly to provide Workmen's Compensation Insurance for all of the latter's employees to be engaged in such work unless such employees are covered by the protection afforded by the Contractor's Workmen's Compensation Insurance. In case any class of employees engaged in hazardous work on the project under this contract is not protected under the Workmen's Compensation Statute, the Contractor shall provide and shall cause each subcontractor to provide adequate employer's liability insurance for the protection of such of his employees who are not otherwise protected.

B. Paragraph 11.2 - Owner's Liability Insurance:

Delete this paragraph in its entirety without substitution.

C. Paragraph 11.3 - Property Insurance:

Delete this paragraph in its entirety and, in lieu thereof, substitute therefor:

11.3.1 - The Owner shall be responsible for and at his option may insure all risks that would be covered by a standard fire insurance policy with extended coverage applicable to the interest of the Owner and any interest of the Contractor and Subcontractors in the structure on which the work of the Contract is to be done and items of labor and materials connected therewith in or adjacent to such structures, including materials in place or to be used as part of the permanent construction, surplus materials, shanties, protective fences, bridges, temporary structures, miscellaneous materials and supplies incidental to the work, and also such scaffolding staging, towers, forms and equipment as are not owned or rented by the Contractor or any Subcontractor, the cost of which is included in the cost of the work; but excluding any tools, owned by mechanics, any tools, equipment, scaffolding, staging, towers and forms owned or rented by the Contractor or Subcontractor, the capital value of which is not included in the cost of the work.

SG-9 TERMINATION OF THE CONTRACT (SUPPLEMENTING ART. 14)

A. Except for those provisions in Paragraph 14.1.1 of the General Conditions providing for termination by the Contractor in case of Owner's Representative's failure to approve a Certificate for Payment as provided in Paragraph 9.6 or for Owner's failure to make payment thereon as provided in Paragraph 9.6, the said Paragraph is hereby amended, modified and superseded as follows:

14.1.1 - If the work under this Contract is stopped, prevented or

precluded for a period exceeding ten (10) days, by reason of any ruling, regulation, order or other action of any court, governmental body or other public authority having jurisdiction thereover, for any reason whatsoever, either party may terminate this contract by seven (7) days written notice to the other and Surety, if any, and the said Contract shall then become null, void and no further effect. In the event of such termination by either party, the Owner's total liability for Work provided under the Contract shall be limited to the payment for building materials and supplies which Contractor, in good faith, has irrevocably committed itself to prior to receipt or service of notice to terminate, and the proportionate value of all such work successfully completed by the Contractor prior to the effective date of such termination, as well as reasonable profit prorated thereon, and shall exclude all responsibility for payments based upon unsatisfactory work, profits not directly related to successfully completed work, and all other costs, expenses or damages of Contractor, its subcontractors, agents, employees, materialmen, suppliers or other persons performing work under this Contract, whatsoever the nature of said claims. The provisions of this Paragraph shall in no way limit or prejudice any rights or remedies of Owner under this Contract or applicable law where Work has been stopped, prevented or precluded as aforesaid, due to the negligence, fault, acts or omissions of Contractor, its subcontractors, agents, employees, materialmen, suppliers or other persons performing Work under this Contract.

SG-10 PROVISIONS REQUIRED BY LAW DEEMED INSERTED:

Each and every provision of law and clause required by law to be inserted in this contract shall be deemed to be inserted herein and the contract shall be read and enforced as though it were included herein, and if through mistake or otherwise any such provision is not inserted, or is not correctly inserted, then upon the application of either party the contract shall forthwith be physically amended to make such insertion or correction.

SG-11 EQUAL EMPLOYMENT OPPORTUNITY:

During the performance of this contract the Contractor agrees as follows:

A. The Contractor will not discriminate against any employee or applicant for employment because of race, creed, color, or national origin. The Contractor will take affirmative action to ensure that applicants are employed, and that employees are treated during employment, without regard to their race, creed, color, or national origin. Such action shall include, but not be limited to, the following: employment, upgrading, demotion or transfer; recruitment or recruitment advertising; layoff or termination; rates of pay or other

forms of compensation; and selection for training, including apprenticeship. The Contractor agrees to post in conspicuous places, available to employees and applicants for employment, notices to be provided by the contracting officer setting forth the provisions of this nondiscrimination clause.

B. The contractor will, in all solicitations or advertisements for employees placed by or on behalf of the contractor, state that all qualified applicants will receive consideration for employment without regard to race, creed, color, or national origin.

C. The contractor will send to each labor union or representative of workers with which he has a collective bargaining agreement or other contract or understanding, a notice, to be provided by the agency contracting officer, advising the labor union or workers' representative of the contractor's commitments under Section 202 of the Executive Order No. 11246 of September 14, 1965, and shall post copies of the notice in conspicuous places available to employees and applicants for employment.

D. The contractor will comply with all provisions of Executive Order No. 11246 of September 24, 1965, and of the rules, regulations, and relevant orders of the Secretary of Labor.

E. The contractor will furnish all information and reports required by Executive Order No. 11246 of September 24, 1965, and by the rules, regulations, and orders of the Secretary of Labor, or pursuant thereto, and will permit access to his books, records, and accounts by the contracting agency and the Secretary of Labor for purposes of investigation to ascertain compliance with such rules, regulations, and orders.

F. In the event of the contractor's noncompliance with the nondiscrimination clauses of this contract or with any of such rules, regulations, or orders, this contract may be cancelled, or terminated, or suspended in whole or in part and the contractor may be declared ineligible for further Government contracts in accordance with procedures authorized in Executive Order No. 11246 of September 24, 1965, and such other sanctions which may be imposed and remedies invoked as provided in Executive Order No. 11246 of September 24, 1965, or by rule, regulation, or order of the Secretary of Labor, or as otherwise provided by law.

G. The contractor will include the provisions of Paragraphs (1) through (7) in every subcontract or purchase order unless exempted by rules, regulations, or orders of the Secretary of Labor issued pursuant to Section 204 of Executive Order No. 11246 of September 24, 1965, so that such provisions will be binding upon each subcontractor or vender. The Contractor will take such action with respect to any

subcontract or purchase order as the contracting agency may direct as a means of enforcing such provisions, including sanctions for noncompliance: Provided, however, that in the event the contractor becomes involved in, or is threatened with, litigation with a subcontractor or vender as a result of such direction by the contracting agency, the contractor may request the United States to enter into such litigation to protect the interests of the United States.

SG-12 DAVIS-BACON ACT:

1. Minimum Wages

a. All mechanics and laborers employed or working upon the site of the work will be paid unconditionally and not less often than once a week, and without subsequent deduction or rebate on any account (except such payroll deductions as are permitted by regulations issued by the Secretary of Labor under the Copeland Act (29 CFR Part 3), the full amounts due at time of payment computed at wage rates not less than those contained in the wage determination part hereof, regardless of any contractual relationship which may be alleged to exist between the Contractor and such laborers and mechanics; and the wage determination decisions shall be posted by the Contractor at the site of the work in a prominent place where it can be easily seen by the workers. For the purpose of this clause, contributions made or costs reasonably anticipated under section 1(b)(2) of the Davis-Bacon Act on behalf of laborers or mechanics are considered wages paid to such laborers or mechanics, subject to the provisions of 29 CFR 5. 5(a)(1)(iv). Also for the purpose of this clause regular contributions made or costs incurred for more than a weekly period under plans, funds, or programs, but covering the particular weekly period, are deemed to be constructively made or incurred during such weekly period.

b. The Contracting Officer shall require that any class of laborers or mechanics which is not listed in the wage determination and which is to be employed under the Contract, shall be classified or reclassified confirmably to the wage determination, and a report of the action taken shall be sent by the Federal agency to the Secretary of Labor. In the event the interested parties cannot agree on the proper classification or relcassification of a particular class of laborers and mechanics to be used, the question accompanied by the recommendation of the Contracting Officer shall be referred to the Secretary for final determination.

c. The contracting Officer shall require, whenever the minimum wage rate prescribed in the Contract for a class of laborers or mechanics includes a fringe benefit which is not expressed as an hourly wage rate, and the Contractor is obligated to pay a cash equivalent of such a fringe benefit, the question accompanied by the recommendation of the Contracting Officer, shall be referred to the Secretary of Labor for determination.

d. If the Contractor does not make payments to a trustee or other third persion, he may consider as part of the wages of any laborer or mechanic the amount of any costs reasonably anticipated in providing benefits under a plan or program of a type expressly listed in the wage determination decision of the Secretary of Labor which is a part of this Contract. Provided, however, the Secretary of Labor has found, upon the written request of the Contractor, that the applicable standards of the Davis-Bacon Act have been met. The Secretary of Labor may require the Contractor to set aside in a separate account assets for the meeting of obligations under the plan or program.

SG-13 PAYROLLS AND BASIC RECORDS:

A. Payrolls and basic records relating thereto will be maintained during the course of the work and preserved for a period of three years thereafter for all laborers and mechanics working at the site of the work. Such records will contain the name and address of each such employee, his correct classification, rates of pay (including rates of contributions or costs anticipated of the types described in section 1 (b)(2) of the Davis-Bacon Act), daily and weekly number of hours worked, deductions made and actual wages paid. Whenever the Secretary of Labor has found under 29 CFR 5.5(a)(1)(iv) that the wages of any laborer or mechanic include the amount of any costs reasonably anticipated in providing benefits under a plan or program described in section 1(b)(2)(B) of the Davis-Bacon Act, the Contractor shall maintain records which show that the commitment to provide such benefits is enforceable, that the plan or program is financially responsible, and that the plan or program has been communicated in writing to the laborers or mechanics affected, and records which show the costs anticipated or the actual cost incurred in providing such benefits.

B. The Contractor will submit weekly a copy of all payrolls to the Owner. The copy shall be accompanied by a statement signed by the employer or his agent indicating that the payrolls are correct and complete, that the wage rates contained therein are not less than those determined by the Secretary of Labor and that the classifications set forth for each laborer or mechanic conform with the work he

performed. A submission of a "Weekly Statement of Compliance" which is required under this contract and the Copeland regulations of the Secretary of Labor (29 CFR, Part 3) and the filing with the initial payroll or any subsequent payroll of a copy of any findings by the Secretary of Labor under 29 CFR 5.5(a)(1)(iv) shall satisfy this requirement. The Prime Contractor shall be responsible for the submission of copies of payrolls of all subcontractors. The Contractor shall make the records required under the labor standards clauses of the contract available for inspection by authorized representatives of the Department of Community Affairs and the Department of Labor, and shall permit such representatives to interview employees during working hours on the job.

SG-14 APPRENTICES:

Apprentices shall be permitted to work as such only when they are registered individually, under a bona fide apprenticeship program registered with a State apprenticeship agency which is recognized by the Bureau of Apprenticeship and Training, United States Department of Labor; or, if no such recognized agency exists in a State, under a program registered with the Bureau of Apprenticeship and Training, United States Department of Labor. The allowable ratio of apprentices to journeymen in any craft classification shall not be greater than the ratio permitted to the Contractor for his entire work force under the registered program. Any employee listed on a payroll at any apprentice wage rate, who is not registered as above, shall be paid the wage rate determined by the Secretary of Labor for the classification of work he actually performed. The Contractor or subcontractor will be required to furnish to the Department of Community Affairs written evidence of the registration of his program and apprentices as well as of the appropriate ratios and wage rates, for the area of construction, prior to using any apprentices on the contract work.

SG-15 COMPLIANCE WITH COPELAND ANTI-KICKBACK ACT AND REGULATIONS:

The Contractor shall comply with the Copeland Anti-Kickback Act and Regulations of the Secretary of Labor (29 CFR, Part 3) which are herein incorporated by reference.

SG-16 NON-DISCRIMINATION CLAUSE:

1. During the term of this contract, Contractor agrees as follows:

   a. Contractor shall not discriminate against any employee, applicant for employment, independent contractor or any other person because of race, color, religious creed, ancestry, national origin, age, or sex.

Contractor shall take affirmative action to ensure that applicants are employed, and that employees or agents are treated during employment, without regard to their race, color, religious creed, ancestry, national origin, age, or sex. Such affirmative action shall include, but is not limited to, the following: Employment, upgrading, demotion, or transfer; recruitment or recruitment advertising; layoff or termination; rates of pay or other forms of compensation; and selection for training. Contractor shall post in conspicuous places, available to employees, agents, applicants for employment and other persons, a notice to be provided by the contracting agency setting forth the provisions of this non-discrimination clause.

b. Contractor shall in advertisements or requests for employment placed by it or on its behalf state all qualified applicants will receive consideration for employment without regard to race, color, religious creed, ancestry, national origin, age or sex.

c. Contractor shall send each labor union or workers' representative with which it has a collective bargaining agreement or other contract or understanding, a notice advising said labor union or workers' representative of its commitment to this non-discrimination clause. Similar notice shall be sent to every other source of recruitment regularly utilized by Contractor.

d. It shall be no defense to a finding of noncompliance with the Contract Compliance Regulations issued by the Pennsylvania Human Relations Commission or this non-discrimination clause that Contractor had delegated some of its employment practices to any union, training program or other source of recruitment which prevents it from meeting its obligations. However, if the evidence indicates that the Contractor was not on notice of the third-party discrimination or made a good faith effort to correct it, such factor shall be considered in mitigation in determining appropriate sanctions.

e. Where the practices of a union or of any training program or other source of recruitment will result in the exclusion of minority group persons, so that Contractor will be unable to meet its obligations under the Contract Compliance Regulations issued by the Pennsylvania Human Relations Commission, or this nondiscrimination clause, Contractor shall then employ and fill vacancies through other nondiscriminatory employment procedures.

f. Contractor shall comply with the Contract Compliance Regula-

tions of the Pennsylvania Human Relations Commission, 16 Pa. Code Chapter 49 and with all laws prohibiting discrimination in hiring or employment opportunities. In the event of Contractor's noncompliance with the non-discrimination clause of this contract or with any such laws, this contract may, after hearing and adjudication, be terminated or suspended, in whole or in part, and Contractor may be declared temporarily ineligible for further Commonwealth contracts, and such other sanctions may be imposed and remedies invoked as provided by the Contract Compliance Regulations.

g. Contractor shall furnish all necessary employment documents and records to, and permit access to its books, records and accounts by, the contracting agency and the Human Relations Commission, for purposes of investigation to ascertain compliance with the provisions of the Contract Complaince Regulations, pursuant to S 49.35 of these Regulations. If Contractor does not possess documents or records reflecting the necessary information requested, it shall furnish such information on reporting forms supplied by the contracting agency or the Commission.

h. Contractor shall actively recruit minority subcontractors or subcontractors with substantial minority representation among their employees.

i. Contractor shall include the provisions of this non-discrimination clause in every subcontract, so that such provisions will be binding upon each subcontractor.

j. The terms used in this non-discrimination clause shall have the same meaning as in the Contract Compliance Regulations issued by the Pennsylvania Human Relations Commission, 16 Pa. Code Ch. 49.

k. Contractor obligations under this clause are limited to the Contractor's facilities within Pennsylvania, or where the contract is for purchase of goods manufactured outside of Pennsylvania, the facilities at which such goods are actually produced.

SG-17 <u>OVERTIME</u>:

1. No Contractor or subcontractor contracting for any part of the contract work which may require or involve the employment of laborers or mechanics, including watchmen and guards, shall require or permit any laborer or mechanic in any work week in which he is employed on such work to work in excess of eight hours in any calendar day or in excess of forty hours in such

workweek, as the case may be.

2. Violation; liability for unpaid wages; liquidated damages. In the event of any violation of the clause set forth in sub-paragraph (1), the Contractor and any subcontractor responsible therefor shall be liable to any affected employee for his unpaid wages. In addition, such Contractor and subcontractor shall be liable to the United States (in the case of work done under contract for the District of Columbia or a territory, to such District or to such territory, for liquidated damages. Such liquidated damages shall be computed with respect to each individual laborer or mechanic employed in violation of the clause set forth in subparagraph (1), in the sum of $10 for each calendar day on which such employee was required or permitted to work in excess of eight hours or in excess of the standard workweek of forty hours without payment of the overtime wages required by the clause set forth in sub-paragraph (1).

3. Withholding for unpaid wages and liquidated damges. The Department of Community Affairs may withhold or cause to be withheld, from any moneys payable on account of work performed by the Contractor or subcontractor, such sums as may administratively be determined to be necessary to satisfy any liabilities of such Contractor or subcontractor for unpaid wages and liquidated damages as provided in the clause set forth in sub-paragraph (2).

4. Subcontracts. The Contractor shall insert in any subcontracts and clauses set forth in sub-paragraphs (a), (b), and (c) of this paragraph and also a clause requiring the subcontractors to include these clauses in any lower tier subcontracts which they may enter into, together with a clause requiring this insertion in any further subcontracts that may in turn be made.

SG-18 OTHER PROHIBITED INTERESTS:

No official of the Owner who is authorized in such capacity and on behalf of the Owner to negotiate, make, accept or approve, or to take part in negotiating, making, accepting, or approving any architectural, engineering, inspection, construction or material supply contract or any subcontract in connection with the construction of the project, shall become directly or indirectly interested personally in this contract, or in any part thereof. No officer, employee, architect, attorney, engineer or inspector of, or for, the Owner who is authorized in such capacity and on behalf of other similar functions in connection with the construction of the project, shall become directly or indirectly interested personally in this contract or in any part thereof, any material supply contract,

subcontract, insurance contract, or any other contract pertaining to the project.

SG-19 SAFETY AND HEALTH REGULATIONS:

Contractors are to comply with laws, rules, regulations and codes dealing with occupational safety and health, including but not limited to the latest amendments of the following:

a. Williams-Steiger Occupational Safety and Health Act of 1970, Public Law 91-596.

b. Part 1910 - Occupational Safety and Health Standards, Chapter XVII of Title 29, Code of Federal Regulations.

c. Part 1518 - Safety and Health Regulations for Construction, Chapter XIII of Title 29, Code of Federal Regulations.

SG-20 ENVIRONMENTAL POLLUTION PA. ACT 247:

The Contractors shall comply with HB 1969 (Act 247) of 1972 relating to the prevention of environmental pollution and the preservation of public natural resources on construction sites.

SG-21 PUBLIC HEALTH AND SAFETY REGULATIONS PA. ACT 287:

The Contractors shall comply with HB 2543 (Act 287) of 1974 to protect the public health and safety by preventing excavation or demolition work from damaging underground utility lines of any kind and shall be subject to the fines if the Act is not adhered to.

APPLICATION AND CERTIFICATE FOR PAYMENT

AIA DOCUMENT G702

TO (Owner):

PROJECT:

APPLICATION NO:

Distribution to:
- ☐ OWNER
- ☐ ARCHITECT
- ☐ CONTRACTOR
- ☐
- ☐

PERIOD FROM:
TO:

ATTENTION:

CONTRACT FOR:

ARCHITECT'S PROJECT NO:

CONTRACT DATE:

CONTRACTOR'S APPLICATION FOR PAYMENT

CHANGE ORDER SUMMARY			
Change Orders approved in previous months by Owner TOTAL		ADDITIONS	DEDUCTIONS
Approved this Month			
Number	Date Approved		
TOTALS			
Net change by Change Orders			

The undersigned Contractor certifies that to the best of his knowledge, information and belief the Work covered by this Application for Payment has been completed in accordance with the Contract Documents, that all amounts have been paid by him for Work for which previous Certificates for Payment were issued and payments received from the Owner, and that current payment shown herein is now due.

CONTRACTOR:

By: _____ Date: _____

Application is made for Payment, as shown below, in connection with the Contract. **Continuation Sheet, AIA Document G703,** is attached.

The present status of the account for this Contract is as follows:

ORIGINAL CONTRACT SUM ..... $ _____

Net change by Change Orders ..... $ _____

CONTRACT SUM TO DATE ..... $ _____

TOTAL COMPLETED & STORED TO DATE ..... $ _____
(Column G on G703)

RETAINAGE _____% ..... $ _____
or total in Column I on G703

TOTAL EARNED LESS RETAINAGE ..... $ _____

LESS PREVIOUS CERTIFICATES FOR PAYMENT ..... $ _____

CURRENT PAYMENT DUE ..... $ _____

State of: County of:
Subscribed and sworn to before me this day of , 19
Notary Public:
My Commission expires:

ARCHITECT'S CERTIFICATE FOR PAYMENT

In accordance with the Contract Documents, based on on-site observations and the data comprising the above application, the Architect certifies to the Owner that the Work has progressed to the point indicated; that to the best of his knowledge, information and belief, the quality of the Work is in accordance with the Contract Documents; and that the Contractor is entitled to payment of the AMOUNT CERTIFIED.

AMOUNT CERTIFIED ..... $ _____
(Attach explanation if amount certified differs from the amount applied for.)

ARCHITECT:

By: _____ Date: _____

This Certificate is not negotiable. The AMOUNT CERTIFIED is payable only to the Contractor named herein. Issuance, payment and acceptance of payment are without prejudice to any rights of the Owner or Contractor under this Contract.

AIA Document G702, APPLICATION AND CERTIFICATE FOR PAYMENT, containing Contractor's signed Certification is attached.
In tabulations below, amounts are stated to the nearest dollar.
Use Column I on Contracts where variable retainage for line items may apply.

APPLICATION NUMBER:
APPLICATION DATE:
PERIOD FROM:
TO:
ARCHITECT'S PROJECT NO:

A	B	C	D	E	F	G		H	I
ITEM No.	DESCRIPTION OF WORK	SCHEDULED VALUE	WORK COMPLETED			TOTAL COMPLETED AND STORED TO DATE (D+E+F)	% (G÷C)	BALANCE TO FINISH (C−G)	RETAINAGE
				This Application					
			Previous Applications	Work in Place	Stored Materials (not in D or E)				

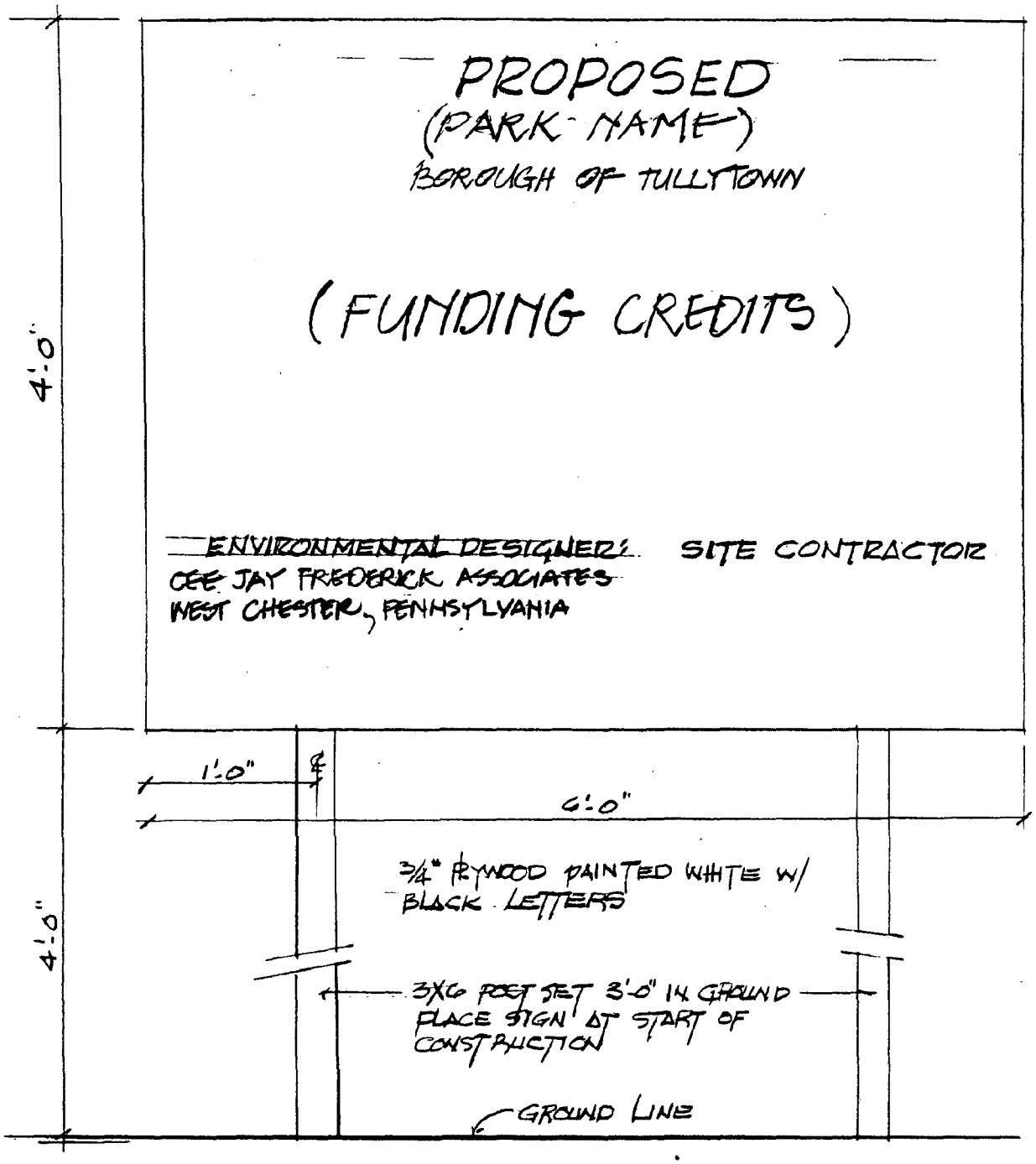

CONSTRUCTION
SIGN

EXHIBIT A - PREVAILING LABOR WAGE RATES

Bucks County Community Development staff will provide prevailing wage rates to Municipality after bidding documents are submitted for review.

List of Contract Drawings

Sheet Name:	Sheet Number
Cover Sheet (For visual reference only)	
Existing Topographic Survey and Demolition Plan	S1
Site Plan · Layout · Utilities Plan · Details	S2
Planting Plan · Details	S3
Grading and Drainage Plan · Details	S4
Details	S5

SECTION 2A GENERAL REQUIREMENTS

2A-1 SITE SURVEYS: The Contractor shall be responsible for determining the grades, verifying the conditions, laying out the work, and correct erection of the work as shown on the drawings. If there is any discrepancy between the levels as established on the drawings, he shall notify the Owner's Representative in writing, describing such discrepancy and shall not proceed with the work affected thereby until he has received written instructions from the Owner's Representative.

2A-2 STORAGE OF MATERIALS: The Contractor shall provide and maintain protection for:

a. Materials requiring protection from all weather,
b. Materials requiring overhead protection, and
c. Materials requiring floors raised above grade.

2A-3 SIGN: The Contractor shall furnish and erect one 4' x 6' construction sign on site at a location approved by the Environmental Designer. The sign shall be of construction as indicated in these specifications and on the drawing at the end of this Section (2A).

2A-4 PROTECTION: Roads - protect present streets. Repair and replace, without cost to the Owner, portions which may be damaged as a result of work under this contract. Roads shall also be kept clean and free of construction dirt and mud. The Contractor shall accept responsibility for any damage which may occur to any existing structures to remain, utilities, trees, play equipment, etc. within or without the "Project Limits" which may be affected by the execution of these plans and specifications.

2A-5 CUTTING AND PATCHING: The Contractor shall do all cutting and patching required for the work of all trades herein mentioned; and, which will be required for the installation of the work of all other trades employed on this project, except as may be specifically mentioned under those trades.

Sleeves will be furnished and installed where necessary.

2A-6 PUMPING: Contractors shall do all pumping and bailing necessary to keep all excavations for footings, trenches, pits, and every other purpose free from water from any source, until completion of the work; furnishing, maintaining and operating pumps or other appliances, as may be necessary.

2A-7 WATCHMAN: The Contractor shall provide Watchman service as deemed necessary to protect the premises and all materials.

2A-8 WELDING: No storage of welding materials, acetylene and oxygen tanks, burners, or other equipment required for execution of welding and cutting work, shall be permitted on the project.

2A-9 TEMPORARY WATER: The General Contractor shall provide water for all construction purposes.

2A-10 TEMPORARY LIGHT AND POWER: The General Contractor shall furnish and install temporary service and other equipment he deems necessary for construction.

2A-11 ELEVENTH MONTH INSPECTION: During the eleventh month after the date of final acceptance of the project by the Owner, the Contractor shall meet with the Owner and the Owner's Representative and determine whether all conditions relating to guarantee, to date, have been satisfied in accordance with the Contract Documents. Should any defects due to faulty materials or workmanship appear at this time, they are to be remedied prior to the expiration of the General Guarantee. Any guarantee, or portions of guarantees, which are in effect for work more than one year shall continue under conditions of the contract.

2A-12 BURNING: The Contractor will not be allowed to burn debris on the site.

2A-13 SCHEDULING OF WORK: Particular care shall be taken in the scheduling of work on the facilities to keep as much of the area in use as possible and to reduce damage to partially completed work.

2A-14 LAYOUT: The Contractor shall be responsible for layout of all facilities in the field including those items which are to be preliminarily staked out and checked in the field by the Environmental Designer.

SECTION 2B DEMOLITION

PART 1 - GENERAL

2B-1 SCOPE: The Contractor shall furnish all labor, superintendence, materials, tools, and equipment necessary to complete all work specified below and depicted on all drawings, or reasonably implied therefrom, concerned with removal of materials in a first class, efficient and workmanlike manner, as noted on the drawings, or as directed by the Owner's Representative.

2B-2 LIMITS OF WORK: The drawings show project and/or property lines for the purpose of identification, and these lines should be regarded as limit of work lines except where otherwise indicated, or directed.

2B-3 COORDINATION: Work specified in this section shall be carefully coordinated with the Utility Companies as listed on the drawings.

PART 2 - MATERIALS

2B-4 EQUIPMENT: Equipment utilized for the removal of and cleanup of various materials on the site shall be of sufficient size and type to remove any material in its entirety, and in an efficient manner.

PART 3 - EXECUTION

2B-5 REMOVAL:

a. All exposed debris including metal, glass, masonry material, wood, rubber, etc. over the entire site area, including the stream and bank of the stream, and existing paving, sand, concrete pad(s) and related surface and subsurface materials, wood posts, concrete and railroad tie curbing, concrete walk, stone swale, or other materials as shown on the plans, shall be removed from the site and disposed of elsewhere, unless authorized otherwise by the Environmental Designer.

b. Where a portion of the existing paving or curbing is to be removed, a neat cut line the full depth of the material will be made with approved equipment prior to removal. Any portion of the material designated to remain that is damaged shall be cut to a smooth even line and removed and replaced as appropriate.

c. All live trees along the bank of the stream are to be retained, and only dead or downed trees are to be removed. Dead trees on the stream bank may be cut flush to the ground, leaving the stump in the ground.

d. Trees for removal as noted on the drawing shall be removed in their entirety including the stumps.

e. Brush and weeds are to be cut down and the roots removed and disposed of prior to grading of the site area.

f. Branches that hang over the proposed paths and are within ten (10) feet of the ground shall be removed.

g. The Contractor shall check with the appropriate agencies and have only necessary utilities cut off prior to removal relocation, or work related thereto, as necessary.

SECTION 2C - EARTHWORK

PART 1 - GENERAL

2C-1 SCOPE: The Contractor shall furnish all labor, superintendence, materials, tools, equipment, and all means of construction necessary to complete all work specified below and depicted on all drawings, or reasonably implied therefrom, in a first class, efficient and workmanlike manner. The items of work to be performed shall include but are not limited to:

1. Removal of debris turned up by earthwork.
2. Site grading including final subgrading.
3. General excavation and filling including supplying of any additional necessary fill.
4. Excavation for all footings and foundations.
5. All hand work required to shape excavations.
6. Shoring and bracing as required to safely support and maintain the banks of all excavations and removals of same.
7. Compacting all fill and backfill and subgrade under slabs and paving.
8. Disposal of all rubbish and debris off site.
9. Pumping and drainage as required.
10. Protection.

Related work specified elsewhere:

1. Refer to other Sections within Division II - Site Work for additional requirements for specified work, which may be more stringent than described herein. In all cases, more stringent requirements shall govern.

2C-2 LIMITS OF WORK: The drawings show "project limit" and/or property lines for the purpose of identification, and these lines should be regarded as limit of work lines except where otherwise indicated, or directed.

2C-3 CO-ORDINATION: Work specified in this section shall be carefully co-ordinated with all utility lines and other relevant conditions, within the project limits.

2C-4 VERIFICATION OF SITE CONDITIONS: Before submitting a bid, the Contractor shall visit and become thoroughly familiar with the site and with the scope of work. He/she shall carefully examine all existing conditions and make allowances for them in the proposal. Submission of a proposal by a Contractor binds him/her to accept the site as it actually is. All material to be excavated and graded shall be considered unclassified.

2C-5 PROTECTION: Use every precaution to prevent damage to structures, roads, trees and utilities above and below ground that join or are included in the area under contract; and, except as otherwise specified, repair or replace, at no additional cost to the Owner, any material or work damaged or destroyed because of contract operations.

Provide all safeguards such as fences, barricades, guard lights, etc., as required.

Maintain all bench marks, monuments, and other reference points. If disturbed or destroyed, replace as directed.

Furnish and install temporary work including shoring and bracing as required to maintain all excavations, and to insure the dafety of workmen, property and the public. When shoring and bracing are removed, fill all voids with sound compacted material.

2C-6 REPAIR OF DAMAGE: Any portion of the property which has been damaged or disturbed by the work under this section shall be repaired and restored as directed to the satisfaction of the Environmental Designer. The Contractor is responsible for saving all trees designated to remain. He/she shall protect existing trees by keeping all equipment and vehicles a minimum of five (5) feet from the trunk of any tree. Any trees badly damaged shall be removed and replaced with trees four (4) to five (5) inches in caliper, of a variety selected by the Environmental Designer.

2C-7 EXPLOSIVES: Explosives shall not be used.

2C-8 LINES, GRADES AND ELEVATIONS: Establish and maintain all lines and grades required for performance of the work described in this section of the specifications. Relate all elevations to the datum elevations indicated on drawings.

2C-9 REMOVAL OF MATERIALS: All debris encountered within the contract area shall be removed and disposed of off the site. Excavated earth materials shall be located on the site as indicated on the grading plan, or as directed by the Environmental Designer.

2C-10 PUMPING AND DRAINAGE: Water shall be removed from all excavations promptly and continuously throughout the progress of the work. Excavations shall be kept dry at all times until the structures to be built in the excavation are completed. Precautions shall be taken to protect uncompleted work from flooding during storms or other causes. Water shall not be allowed to drain onto or damage adjacent property.

PART 2 - PRODUCTS

2C-11 MATERIALS: Fill shall be clean selected earth obtained from the construction site or from off-site sources as approved by the Environmental Designer. Fill material shall be used to bring the finished rough grade level to the elevations required. Material shall be reasonably free from roots, wood and other organic material. Stones larger than four inches (4") maximum dimension shall not be used in the upper six inches (6") of fill.

Porous Fill, to form a capillary water barrier, shall be clean crushed non-porous rock or crushed or uncrushed gravel, uniformly graded, of the size indicated on the drawings, or specified elsewhere, herein.

Excavated Material approved for use as backfill shall be free of stones larger than two inches (2") maximum dimension, roots and organic material or other debris unless authorized by the Environmental Designer.

PART 3 - EXECUTION

2C-12 LAYOUT OF WORK: The Contractor shall employ a qualified engineer to properly establish and maintain all necessary lines and grades, check all discrepancies and elevations, and promptly inform the Owner's Representative of any discrepancies before proceeding. Any errors made in layout will be corrected at the contractor's own expense.

2C-13 EXCAVATION: Excavation is unclassified and includes materials of varying description existing in spaces to be excavated.

Excavate to elevations and dimensions indicated, and allow additional space as required for construction operations and inspection of foundations. Except where rock is encountered, footings shall be placed on undisturbed soil, minimum depths shall be as indicated. Subgrade for foundations and footings shall be subject to the Owner's inspection. Where soil conditions permit, footing trenches may be excavated to the exact dimensions of the concrete and side forms omitted. Place footings and foundations on undisturbed and firm subgrade; fill any excess cut under footings with concrete. No footing shall be built on fill or an incline. Changes in elevation shall be made with a stepped situation. All subgrade elevations shall be formed during the course of the work and shall be kept clean of all rubbish and debris.

Excavation shall not be done below the grades shown on the drawings unless so directed by the Environmnetal Designer in writing. Should the Contractor, without authorization, excavate more than shown on the drawings or specified, such excavation will not be paid for as extra work and the Contractor shall refill such excavation with stone, concrete or hard compacted material as directed by the Environmental Designer.

Frost protection: When freezing temperatures may be expected, do not excavate to the full depth indicated, unless the footing or slabs can be placed immediately after the excavation has been completed. Protect bottoms of excavations from frost if concrete placement is delayed.

2C-14 BACKFILLING: Backfilling shall not commence until construction below finish grade has been approved, forms removed and the excavation cleaned of trash and debris. Fills shall not be placed on subgrade that is muddy, frozen or that contains frost.

Backfill shall be placed in layers not more than twelve inches (12") thick and each layer shall be evenly compacted to the density specified below. Finished compacted areas shall be brought to a reasonable true and even plane at the required elevations. The moisture-density relationship of soils to be compacted will be determined in accordance with ASTM D698, latest edition, and field density determination made in accordance with ASTM D1556, latest edition.

2C-15 COMPACTION OF SOILS: Minimum density to be obtained in compacting soils shall be the following percentage of "maximum density" as defined in ASTM D698 Method C,

LOCATION	PERCENTAGE
Backfill under slabs or paving on grade	95%
Backfill of all utility trenches under paving.	95%

2C-16 POROUS FILL: Spread porous fill evenly over prepared subgrade or backfill so that after compaction thickness shall be as indicated on the Drawings.

Compact porous fill in place using vibratory compaction equipment to obtain desired even compaction over the entire area.

2C-17 FINISHED ROUGH GRADING: Uniformly grade all areas to a smooth even surface. The finished surface shall be compacted and free from irregular surface changes, and shall be graded in relation to the finished elevations to drain water as indicated on the drawings or as directed in the field.

2C-18 SUBGRADES: Grades not otherwise indicated shall be uniform levels or slopes between such points where elevations are given or between such points and existing finished grade. Rough grade elevations shall be four inches (4") below finished grade where lawn work is involved.

SECTION 2D - PAVING (BITUMINOUS, WOOD CHIPS, GRAVEL & SAND)

PART 1 - GENERAL

2D-1 SCOPE: The Contractor shall furnish all labor, superintendence, materials, tools, equipment and all means of construction necessary to complete all work specified below and depicted on all drawings, or reasonably implied therefrom in a first class, efficient and workmanlike manner. The items of work to be performed shall include but are not limited to:

1. Subgrade for bituminous paving, fitness trail & gravel surfaces
2. Sub-base for bituminous paving, fitness trail & gravel surfaces
3. Bituminous paving and patching (parking lot & basketball court)
4. Bituminous resurfacing
5. Gravel surfaces (play area, picnic bench and game table pads)
6. Sand Play Area
7. Woodchip/sand surface for fitness trail
8. Metal Edging
9. Cleanup

2D-2 LIMITS OF WORK: The drawings show project and/or property lines for the purpose of identification, and these lines should be regarded as limit of work lines except where otherwise indicated, or directed.

2D-3 CO-ORDINATION: Work specified in this section shall be carefully co-ordinated with all utility lines and curbing within paved areas.

PART 2 - MATERIALS

2D-4 STONE BASE AND SURFACE MATERIALS:

1. Stone base material for the asphalt parking, fitness trail, play area and basketball areas shall be 2A modified crushed stone conforming to Pennsylvania State Department of Transportation Specifications, Form 408, 1976.

2. Stone base materials for the fitness trail shall be three-quarter inch (3/4") modified crushed stone conforming to Pennsylvania State Department of Transportation Specifications, Form 408, 1976.

3. Gravel for the play area and picnic bench and game table pads shall be Delaware River Jacks (multi-colored) as produced by Langhorne Stone Company, Langhorne, Pennsylvania, or approved equal: three-eighth inch (3/8") for the play area and three to five inches (3" - 5") for the pads. A sample is to be submitted to the Owner's Representative for approval.

2D-5 OTHER SURFACE MATERIALS

1. Sand for the play area and to be mixed with woodchips for the fitness trail surface course shall have been sterilized and of an approved color.

2. Woodchips shall be clean and free of any debris, twigs or organic material. Sample(s) shall be submitted to the Owner's Representative for approval.

3. Metal edging shall be one-quarter inch (1/4") by five inches (5") flat stock and pins as manufactured by Joseph T. Ryerson & Son, Inc. Chicago, Illinois.

2D-6 BITUMINOUS PAVING MATERIALS: A-1 bituminous materials and paint shall meet all requirements of the Pennsylvania Department of Transportation Specifications, Form 408, 1976, for use as follows:

1. ID2 Binder Course for base on new parking areas, the basketball court, and patching of the streets where required. Where used for surface course of the parking area, additional fines are to be added.

2. ID2 Wearing Course for surfacing of patches in roadway.

3. FJ-1 Wearing Course for surfacing on basketball courts.

4. Bituminous tack coat for use along edge of existing paved surfaces prior to the placement of new asphalt material.

5. Line Paint to be approved type of traffic line paint, for demarcation of parking stalls and the basketball court surface.

PART 3 - EXECUTION

2D-7 SUBGRADE FOR BITUMINOUS CONCRETE PAVING:

1. Fill as specified in Section 2C shall be used where removal of topsoil or other undesirable material brings the elevations lower than the proposed finish subgrade. Fill shall be placed in layers of twelve inches (12") and compacted with a vibratory or sheepsfoot roller weighing not less than ten (10) tons or other approved means until ninety-five percent (95%) maximum dry weight density in accordance with ASTM D-698 is obtained. All hollows and depressions which develop under rolling shall be refilled with approved fill as per these specifications and rolled until subgrade is firm and even. Inaccessible areas shall be compacted with a hand vibratory compactor or other approved means.

2. Subgrade Preparation: Subgrade shall be cleared of all objectionable material as specified in Section 2C and shall be compacted with approved

equipment as indicated above. See details for depth of subgrade below finished surface for different surface types.

3. Construction Co-ordination: All walls/curbs, drainage structures, utilities or other structures within or adjacent to the paving areas or underground must be in place and backfills thoroughly consolidated before the subgrade preparation is completed and pavements are laid. This does not imply that various portions of the work may not be performed progressively as the areas are made ready.

4. Approvals: No sub-base shall be placed until the subgrade has been approved by the Owner's Representative.

2D-8 STONE BASE COURSE BITUMINOUS PAVING:

1. Placement: The stone base as specified shall be placed on the approved finished subgrade to the depth noted in the details after compaction. Stone shall be compacted with an approved roller of ten (10) ton 3-wheel or other approved design until it no longer waves or creeps before the roller.

2. Spreading of Stone: Shall be directly from trucks or from piles outside the pavement area, any concentration of fine or coarse stone will be removed and replaced with well-graded stone.

3. Condition: The Contractor is responsible for the maintenance and repair of the sub-base during the course of construction. If damage occurs to the stone base after rolling, the Contractor shall repair the base and recompact prior to paving.

4. Approvals: The sub-base must be approved by the Owner's Representative before placement of the base course. It must be dry and even, conform to proper lines and grades and be free of all foreign material.

2D-9 BASE COURSE - BITUMINOUS PAVING

1. Placement: All base course material shall be placed in accordance with Pennsylvania Department of Transportation Specifications Form 408, 1976. An approved type of spreader shall be used.

2. Asphalt Base Course: Shall be laid under approved conditions in the quantity required to form a uniform surface after full compaction of thickness as indicated on the Drawings. Existing asphalt in street to be removed shall be cut to a clean even line and to the full depth of the existing material. The base course for the basketball courts shall be two inches (2") after compaction.

3. Locations Inaccessible: To the roller shall be compacted with an approved hand vibratory compactor having a bearing area not exceeding 36 square inches, or with other approved equipment.

4. Approvals: The base course must be approved by the Owner's Representative before placement of the surface course. It must be true to line and grade and everywhere parallel to the existing finished grade(s). All high spots and depressions will be adjusted prior to application of surface layer. Any damage done to the base shall be repaired prior to placing of the surface course.

5. Protection: All curbs, drain inlets, walls, and other installations in or adjacent to the area to be paved shall be fully protected by covering or other suitable method before the base course is installed.

2D-10 BITUMINOUS PAVING, SURFACE COURSE

1. The surface course shall be laid in accordance with the Pennsylvania Department of Transportation Specifications, Form 408, 1976. Asphalt shall only be placed when the base course is dry, clean and the temperature is at least 40 F. Tack coat, as specified, shall be installed in accordance with the same above specifications, when patching against existing asphalt.

2. Spreading of the surface course in the parking area shall be done by mechanical self-powered paver capable of spreading the mixture true to line and grade. This course shall be placed to the final grades and elevations indicated on the drawings. Care must be taken to insure that no depressions occur greater than one-quarter inch (1/4") in ten feet (10') in any direction.

3. Compaction of the main area shall be with a minimum of an eight (8) ton roller. Locations inaccessible to roller shall be compressed with approved heated hand vibratory compactor.

4. Where defects including damage appear in composition, compression or finish of the completed work, such areas shall be removed to the full depth of the course and the defective material replaced with the required thickness of pavement after compaction, at the Contractor's expense.

5. Construction of the surface course shall be continuous and visible. Joints will not be accepted. If it is necessary to roll over the end of the laid mixture, the compacted end shall be cut back sufficiently to insure a proper joint. Any curbs pushed out of alignment or damaged due to rolling or other construction under this contract shall be realigned or replaced at no additional cost to the Owner.

6. Meeting existing paving: Wherever new pavement meets existing pavement, it shall form a complete even joint free of any gaps or missing pavement whether or not such connections are indicated on the Working Drawings. Existing paving shall be cut to a clean even line prior to placing of proposed paving and any exposed edge(s) coated with specified tack coat.

7. Final thickness shall be one inch (1") after compaction for the surface course for the basketball courts and a minimum of two inches (2") after compaction for the parking and road surfaces.

8. The paving of the basketball court is to be carefully placed so the surface does not vary more than one-quarter inch (1/4") in ten feet (10'). Waterholding areas, or 'bird baths', are strictly prohibited. Such conditions, if they occur, shall be rectified at the discretion of the Owner's Representative at the Contractor's expense.

9. Where resurfacing course stops against existing asphalt paving, a "V" channel shall be cut in the existing paving and the new paving butted against. No feathering of resurfacing course will be permitted.

10. Line painting for the parking and courts shall be done in a workmanlike manner with straight even lines of the size indicated on the drawings.

2D-11 STONE & GRAVEL - PLAY AREA AND PICNIC BENCH AND GAME TABLE PADS:

1. Stone for base as specified under 2D-4-2 shall be placed to a compacted depth of four inches (4") throughout the area designated for stone. It shall be evenly spread and rolled with an approved eight (8) ton roller or other approved means to create an even smooth surface. Inaccessible areas shall be compacted by a hand vibratory compactor.

2. Stone for the surface as specified under 2D-4-3 shall be placed to a depth of four inches (4"), or as otherwise indicated on the drawings.

3. The Contractor shall be responsible for an even, well-compacted subgrade prior to placing stone.

2D-12 SAND - PLAY AREA: Sand as specified under 2D-1 shall be placed to a full depth of eight inches (8").

2D-13 WOODCHIPS/SAND - FITNESS TRAIL: Woodchips and sand as specified under 2D-2 shall be mixed in a proportion of three (3) parts woodchips to one (1) part sand before placement. After mixing thoroughly it shall be evenly spread to a compacted depth of four inches (4") with an approved roller or other approved means to create an even smooth surface. Inaccessible areas shall be compacted by a hand vibratory compactor. Edges of the trail and fitness stations shall be formed by spade cutting a clean straight edge. Adjacent lawn areas shall be repaired, as necessary.

2D-14 CLEANUP: During paving operations all excess material and debris shall be picked up and disposed of off-site.

SECTION 2E - CONCRETE

PART 1 - GENERAL

2E-1 SCOPE: The Contractor shall furnish all labor, superintendence, materials, tools, equipment and all means of construction necessary to complete all work specified below and depicted on all drawings, or reasonably implied therefrom, in a first class, efficient and workmanlike manner. The items of work to be performed shall include but are not limited to:

1. Subgrade for concrete slabs (park shelter, bike rack) & walks
2. Stone base for concrete slabs (park shelter, bike rack) & walks
3. Forms
4. Concrete slabs (park shelter, bike rack) & walks
5. Concrete foundations

2E-2 LIMITS OF WORK: The drawings show project and/or property lines for the purpose of identification, and these lines should be regarded as limit of work lines except where otherwise indicated, or directed.

2E-3 CO-ORDINATION: Work specified in this section shall be carefully co-ordinated with all other utilities and site work occurring within paving areas.

PART 2 - MATERIALS

2E-4 CONCRETE:

1. Forms: Shall be constructed of clean, straight steel, lumber or plywood, tight to prevent leakage of water and fine material.

2. Cement: Cement shall be Air-Entrained Portland Cement, Type IA or IIA, or high early strength Portland Cement. It shall conform to the ASTM specification, serial designation C-150, latest edition, and shall be a brand approved by the Owner's Representative. One brand of cement shall be used for all exposed concrete. All cement shall be freshly manufactured stock. Cement reclaimed from cleaning bags or leaking containers shall not be used.

3. Aggregates: Concrete aggregates shall conform to the tentative specifications for Concrete Aggregates, ASTM Serial Designation C-33, latest edition. The maximum size of the coarse aggregate shall not be larger than three-quarter inch (3/4").

4. Reinforcing Steel: Reinforcing steel must be correctly rolled to section and free from all surface defects, and shall be in accordance

with ASTM A-615, Grade 60, as evidenced by manufacturer's certificates. The steel shall be new billet stock of American manufacture. All bars shall be deformed and rolled with raised symbols to identify the manufacturer size and grade of the bar.

Welded wire mesh reinforcing shall conform to ASTM A-185, amended to date &60,000 p.s.i. yield point).

Tie wire shall be No. 18 U.S. Steel Wire Gauge black annealed wire.

5. Expansion joint material shall be an approved cork expansion joint. The Contractor is to submit detailed information on the particular material to be used for approval. Sealer shall be an approved type of rubberized sealer - information to be submitted for approval.

6. Stone base material shall be three-quarter inch (3/4") modified crushed stone conforming to Pennsylvania State Department of Transportation Specifications, Form 408, 1976.

PART 3 - EXECUTION

2E-5 CONCRETE SLABS, WALKS & FOUNDATIONS

1. Subgrade shall be compacted to ninety-five percent (95%) dry maximum density as outlined under 2C-15 of this specification.

2. Stone base shall be placed where applicable over the completed subgrade to a depth below the finished elevation as indicated on the Working Drawings. Stone shall be compacted as outlined under Section 2D-8 of this specification.

3. Froms shall conform to the shape, lines, grades and dimensions of the concrete as called for on the Drawings. Steel and/or lumber used in the forms shall be free from loose knots or other defects. Forms shall be anchored securely to assure they will remain in place when concrete is poured.

4. Concrete shall be ready-mix which has a 28-day minimum compressive strength of 3300 p.s.i. when tested in accordance with current A.S.T.M. Designation C-143, amended to date. Cement used shall be air entrained of Type 1A or IIA in accordance with A.S.T.M. Designation C-150, amended to date. Sand shall be clean sharp bar sand.

5. Placing of Concrete: Care shall be taken in the placing of the concrete so as not to dislodge the forms of the reinforcing. The concrete pad for the park shelter shall be screeded and finished with a wood float to produce a smooth surface. Other areas of concrete shall be screeded and finished with a wood float, then brushed to producea light broom finish. Care shall be taken not to work the concrete while it is excessively wet.

   Expansion joints shall be one-half inch (1/2") premolded material of an approved cork type and shall be recessed a minimum of one-half inch

(1/2"); final one'half inch (1/2") shall be filled with an approved sealer matching the color of the concrete. Expansion joints shall occur at no more than twenty feet (20') on center. Expansion joints shall also occur at interfaces with existing concrete paving. Control joints (scoring) shall occur as indicated on the drawings.

6. Curing of Concrete: Concrete shall be covered with burlap mats, hay, straw, or other approved material for a period of three (3) days. During this period the material shall be kept damp to prevent too rapid curing.

   If temperature is expected to reach 32 degrees Fahrenheit, spread straw or other blanketing to prevent freezing of concrete. The Contractor, at his own expense, shall be responsible for replacement of any concrete damaged due to freezing, or rain, or improper pouring or curing methods.

7. Forms are not to be removed (except face forms) for twenty-four (24) hours after placing concrete, barricades against traffic for seven (7) days.

8. Any damaged or broken sections shall be immediately replaced so as to not hold up the progress of the job.

2E-6 CLEANUP: The Contractor shall clean up as he progresses with his work. All debris, excess concrete, forms and materials shall be removed from the site.

SECTION 2F - SITE DRAINAGE

PART 1 - GENERAL

2F-1 SCOPE: The Contractor shall furnish all labor, superintendence, materials, tools, equipment, and all means of construction necessary to complete all work specified below and depicted on all drawings, or reasonably implied therefrom in a first class, efficient and workmanlike manner. The items of work to be performed shall include but are not limited to:

1. Installation of gravel basin, runnel and splash bed.
2. Installation of aluminum corrugated metal pipe.
3. Backfilling of trenches.
4. Metal Edging.
5. Rip-rap.

2F-2 LIMITS OF WORK: The drawings show project and/or property lines for the purpose of identification, and these lines should be regarded as limit of work lines except to the front of the property where connections may be made in the road right-of-way, or, where otherwise indicated, or directed.

2F-3 CO-ORDINATION OF WORK: The work in this section shall be carefully co-ordinated with the Grading and Paving Work which will occur in the same vicinity.

PART 2 - MATERIALS

2F-4 STONE:

1. Surface stone for the gravel basin & runnel shall be three-eighth inch (3/8") Delaware River Jacks (multi-colored) produced by Langhorne Stone Company, Langhorne, Pennsylvania or approved equal. Gravel for the splash bed at the Park Shelter shall be three to five inch (3" - 5") of the same type.

2. Stone base for all drainage structures shall be one inch (1") clean crushed stone.

3. Stone for Rip Rap shall be approved type of quarry 'shotrock' minimum size to be eight inches (8") in any direction.

2F-5 PIPE: Shall be an approved type of aluminum corrugated metal pipe with standard pipe end section to fit ten inch (10") opening.

2F-6 METAL: Edging shall be as specified in Section 2D-5-3.

PART 3 - EXECUTION

2F-7 TRENCHES: Trenches for the installation of the drain lines shall be a minimum of eighteen inches (18") wider than the diameter of the pipe, or allow sufficient room to work around the pipe and properly backfill.

2F-8 INSTALLATION OF PIPE: All pipe shall be installed at the elevations required on the Working Drawings. Unless permitted otherwise in writing from the Owner's Representative, all pipe joints shall be left exposed until inspected and accepted.

2F-9 JOINTS: All joints are to be completely sealed with approved material.

2F-10 PROTECTION: The interior of the pipe shall be kept clear of dirt and other deleterious material. As work progresses the exposed end of the pipe shall be provided with approved temporary covers fixed to the pipe. Any damaged pipe shall be removed and replaced immediately.

2F-11 RIP-RAP: Stone shall be a minimum of eight inches (8") in diameter as previously specified. Stone shall be dumped in place to a depth of eighteen inches (18") below finish grade.

2F-12 BACKFILL: The Contractor shall backfill around pipe in no more than twelve inch (12") layers. Layers of backfill shall be compacted to eliminate future settlement with an impact ram or other approved equipment.

Backfill material shall be free from large rocks, debris, and other material which may hinder proper backfilling around the catch basins and drain lines.

SECTION 2G - GENERAL SITE IMPROVEMENTS

PART 1 - GENERAL

2G-1 SCOPE: The Contractor shall furnish all labor, superintendence, materials, tools, equipment and all means of construction necessary to complete all work specified below and depicted on all drawings, or reasonably implied therefrom, in a first class, efficient and workmanlike manner. The items of work to be performed shall include but are not limited to:

1. Final subgrade preparation for site improvements.
2. Bollards.
3. Benches
4. Fencing.
5. Baseball infield mix.
6. Line marking.
7. Painting
8. Trash Receptacles.
9. Sign and lettering.
10. Picnic table.
11. Cooking unit.
12. Basketball backgoard posts and net.
13. Timber edging.
14. Grandstands.
15. Corner and foul line markers.
16. Bike rack.
17. Timber retaining wall.
18. Game tables.
19. Playground equipment.
20. Tire stops.

2G-2 LIMITS OF WORK: The drawings show project and/or property lines for the purpose of identification, and these lines should be regarded as limit of work lines unless otherwise indicated, or directed.

2G-3 CO-ORDINATION: The work performed under this section shall be carefully co-ordinated with all Fencing Work.

PART 2 - MATERIALS

2G-4 MASONRY: Concrete shall be 3300 p.s.i. air entrained concrete as specified in Paragraph 2E-4 of these specifications.

2G-5 METALS:

1. Reinforcing bars shall be high strength material and conform to ASTM A-615 Grade 60, as amended to date.

2. Welded wire mesh reinforcing shall conform to ASTM A-185, as amended to date. (70,000 p.s.i. yield point).

3. Any bolts, nails or other fasteners shall be hot dipped galvanized, if not being painted.

4. Tie wire shall be 18 U.S. Steel Wire Guage black annealed wire.

2G-6 WOOD:

1. Timbers for the retaining wall and edging shall be new six inch by six inch by eight foot (6" x 6" x 8'), southern yellow pine or approved equal. Bollards shall be of a size as indicated on the drawings. Material shall be pressure treated with an approved material other than creosote and having a .4 retention. Wood shall be free of splits, decay, and noticeable mechanical damage.

2. Wood for the sign shall be eight inches (8") high by a width to match existing clear heart Redwood or Cedar free of splits, decay, warp, loose knots, or noticeable mechanical damage. Wood shall be finished two (2) sides and be a thickness to match the existing sign material.

2G-7 PAINTS AND FINISHES:

1. Stain for the sign shall be of approved manufacture of a color to match the existing sign.

2. Paints for metal shall be as manufactured by Rust-Oleum Corporation, Evanston, Illinois or approved equal. Primer coat shall be of an approved color with a second coat of the same primer, unless otherwise directed.

2G-8 INFIELD MATERIAL: Infield shall be clay - sand mixture "Best Top," as manufactured by All American Best-Top and Recreation Co., Inc., or approved equal. Sample and manufacturers specifications are to be submitted for approval by the Owner's Representative.

2G-9 MANUFACTURED PLAY EQUIPMENT:

1. Player benches shall be a flat Miracote all metal red bench fifteen feet (15') in length with two inch (2") I.D. pipe supports four feet (4') o.c. set in twelve inch (12") round by thirty inch (30") deep concrete footings. Bench shall be as manufactured by Miracle Recreation Equipment Company, or approved equal. Information on cuts to be submitted for approval.

2. Grandstands shall be five (5) rail all metal bleachers of "Miracote" seat finish and galvanized metal frame as manufactured by Miracle Recreation Equipment Co., Grinnell, Iowa, or approved equal. All seats to be red in color. Cuts and specifications are to be submitted for approval.

3. Bike Rack shall be Rustic Bike Rack Model No. 676 as manufactured by Game Time, Inc., Fort Payne, Alabama, or approved equal.

4. Game Tables shall be Redwood Game Tables with four (4) seats, Model No. 105, as manufactured by Landscape Structures, Inc., Delano, Minnesota 55328.

5. Picnic table shall be an eight foot (8') metal frame with wood top, Model 511-080 as manufactured by Mexico Forge, Kilgore Corp., Reedsville, Pennsylvania, or approved equal.

6. Cooking units shall be permanent all steel units, Model 455-000 as manufactured by Mexico Forge, Kilgore Corp., Reedsville, Pennsylvania, or approved equal.

7. The basketball standard, backboard and steel net shall be Model 901-200 as manufactured by Mexico Forge, Kilgore Corp., Reedsville, Pennsylvania or approved equal.

8. Flat benches at basketball court shall be Model 180-006 as manufactured by Mexico Forge, Kilgore Corp., Reedsville, Pennsylvania, or approved equal.

9. Corner Markers: Corner markers and foul line markers shall be red coated polyfoam pylon markers with aluminum ground socket as manufactured by Jayfro Corporation, Waterford, Connecticut, or approved equal. The Contractor is to submit complete information for approval.

10. Tire stops shall be reinforced concrete of an approved type and design measuring six inches (6") high by six feet six inches (6'-6") long.

11. Trash Receptacles shall be new fifty-five (55) gallon drums with Self-closing Domes, Model 504-000, as manufactured by Mexico Forge, Kilgore Corp., Reedsville, Pennsylvania, or approved equal. Finish as per Section 2G-7.

12. Bases shall be of an approved type and manufacture. Cuts are to be submitted to the Owner's Representative.

13. Fencing and gate with latch to receive padlock shall be six foot (6') high stockade fence as manufactured by Rusticraft Fence Company, Malvern, Pennsylvania, or approved equal.

14. Spring Animals shall be "Cat" - Model #SA10 as manufactured by Patrick Manufacturing Company, Portland, Oregon, or approved equal.

15. Wood climber shall be Model 15cr modified, less slide (008) and arch (615), plus Chain Ladder (306), Fire Pole (060), Log Roll (416), with See Saw Model 210r.

16. Whirler shall be an eight foot (8') Spin-Around, Model 1508-000, as manuractured by Mexico Forge, Kilgore Corp., Reedsville, Pennsylvania, or approved equal.

17. Tire Raft shall be a nine foot by nine foot (9' x 9') O.D. Eight Tires Model M690, as manufactured by Childscapes, Inc., Monroe, Georgia 30655, or approved equal.

PART 3 - EXECUTION

2G-10 SUBGRADE:

1. Final subgrade shall be a smooth even grade parallel to the finished grade and at the proper depth for the particular facility.

2. Care shall be taken the subgrade is compacted properly prior to placing of surface materials for the particular facility involved.

2G-11 TIMBER RETAINING WALL AND EDGING:

1. Wood shall be as previously specified, and installed as per details and drawings.

2. Edges of timber edging to have one inch (1") champher as shown on the drawings.

3. No backfilling of retaining wall will be permitted before inspection and approval by the Owner's Representative.

2G-12 BENCHES: New benches shall be the type as specified for players and/or spectators. A cut and detailed information shall be submitted for approval. Locations as shown on the plan drawings are approximate. Final locations are to be set in the field. New and relocated benches shall be set plumb and level with the detailed concrete foot (12" x 30") and no tilting of the benches will be permitted.

2G-13 LINE & CORNER MARKINGS:

1. Bases for corner markers to be used for the softball and soccer fields shall be installed at the appropriate locations to hold the ground socket, and shall be concrete footings eighteen inches (18") deep, set two inches (2") below grade.

2. Lines for the fields will be laid out true and straight, and marked with an approved lime.

2G-14 BOLLARDS:

1. Bollards shall be set as detailed on the drawings. Care shall be taken as to spacing and setting plumb. All bollards shall be set to the same height from finished grade.

2. Bollards along straight runs are to be spaced five feet (5') o.c.; along curves the number shown on the Drawings shall be evenly spaced between those at the terminus of a straight run.

2G-15 GRANDSTANDS: Contractor shall place stands where indicated on the drawings. Stands shall be set on precast concrete curbing of approved type. Top of curbing to be set approximately one-half inch (1/2") above finished grade.

2G-16 SOFTBALL INFIELD: The prepared infield mix, as specified, shall be applied over the skinned area to a depth of four inches (4") rolled and raked smooth. A sample and complete specification on the mix are to be submitted to the Owner's Representative prior to bringing the material on-site. Particular care shall be taken to be sure the subgrade of the infield is uniform, smooth and the same gradient as the finished grade.

2G-17 PICNIC TABLES: Tables of an approved manufacture shall be set in a four inch (4") gravel pad of size indicated herein and on the Drawings. Tables shall be set plumb and level. Final locations of tables are to be determined in the field by the Owner's Representative. Footings for the table to extend to a depth of thirty inches (30") below finished concrete surface.

2G-18 COOKING UNITS: Cooking units shall be set in a concrete footing as indicated on the Drawings. Units to be set plumb and level to the appropriate height. Final locations are to be determined in the field by the Owner's Representative.

2G-19 BASKETBALL STANDARDS: Basketball standards shall be set in the size footing indicated on the Drawings. Concrete shall be recessed enough to allow for asphalt paving to butt against the pole. Care shall be taken when setting the standards to establish the correct height from the finished court surface. Standards shall be set plumb in all directions. Any concrete or asphalt materials splashed on the pole shall be removed when work is completed.

2G-20 PLAY EQUIPMENT: All specified equipment shall be permanently installed, as per the manufacturer's instructions, including the provision of concrete footings at the direction of the Owner's Representative. Cuts and detailed information are to be submitted for approval. Final locations are to be approved in the field by the Owner's Representative.

2G-21 BIKE RACK: The specified bike rack is to be installed as shown on the Drawings in a four inch (4") concrete pad. Footings are to extend to a depth of thirty inches (30") below the finished concrete surface.

2G-22 FENCING: All fencing shall be installed as indicated on the Drawings. Care shall be taken to set all sections at the same height from finished grade. Posts shall be set in the ground plumb, backfilled with screenings and compacted.

2G-23 TRASH RECEPTACLES: Will be placed at the direction of the Owner's Representative.

SECTION 2H - LAWNS AND PLANTING

PART 1 - GENERAL

2H-1 SCOPE: The Contractor shall furnish all labor, superintendence, materials, tools, equipment and all means of construction necessary to complete all work specified below and depicted on all drawings, or reasonably implied therefrom, in a first class, efficient and workmanlike manner. The items of work to be performed shall include but are not limited to:

1. Scarifying of subgrade for topsoil.
2. Supplying, hauling and placing of topsoil.
3. Fine grading.
4. Seedbed preparation.
5. Selection of all trees and shrubs of the kind and size specified.
6. Planting of all trees and shrubs.
7. Seeding and mulching.
8. Stone mulch supplied and installed.
9. Maintenance and guarantee of plant material as specified.
10. Areas of Natural Plant Succession.

2H-2 LIMITS OF WORK: The drawings show project and/or property lines for the purpose of identification, and these lines should be regarded as limit of work lines unless otherwise indicated, or directed.

2H-3 CO-ORDINATION: Work specified in this Section shall be carefully co-ordinated with Section 2G "General Site Improvements," Section 2C "Earthwork," and 2I "Fencing."

PART 2 - MATERIALS

2H-4 TOPSOIL:

1. Supplied topsoil shall be natural, friable, fertile, fine sandy loam possessing the characteristics of representative topsoils in the vicinity which produces heavy growth of grass, crops, or other vegetation; and shall be obtained from naturally well-drained areas from which the topsoil has never been stripped. The topsoil shall be free from subsoil, objectionable weeds, sods, stiff clay, stones larger than two inches (2") in diameter, or any other material or substance which might be harmful to plant growth or a hindrance to planting operations.

2. Topsoil shall meet the following requirements as it will be tested for compliance:

   a. pH-5.7
   b. Organic matter 2.5% to 3.5%

c. Phosphorus - High
d. Potash - High

2H-5 PEAT: Peat (not peatmoss) shall be "HUMIX" or "HUMALL PEAT" or approved equal for use in plant pits and beds. Baled peat shall not be used as a mulching material.

2H-6 PLANTING SOIL MIXTURE: The planting soil mixture shall be composed of the following materials well mixed in the specified proportions which are by volume, and shall be hereinafter referred to as: soil mix, three (3) parts peat to six (6) parts topsoil.

2H-7 COMPLETE FERTILIZER: Fertilizer shall be complete mixture analyzing 10% Nitrogen, 6% Phosphorus, 4% Potash of which at least one-half (1/2) of the nitrogen shall be ureaform. It shall be uniform in composition, free-flowing and suitable for application with approved equipment. Fertilizer shall be delivered in its original unopened container with a guaranteed analysis, the trade name, trade mark and the warranty of the producer printed on, or attached to, each container.

2H-8 WRAPPING MATERIAL: Wrapping material for trees shall be Krinkle-Kraft, waterproof paper 30-30-30 in four inch (4") strips or other approved paper.

2H-9 RUBBER HOSE: Rubber hose for guying shall be new two (2) ply fabric bearing rubber hose. Inside diameter not less than one-half inch (1/2").

2H-10 GUY WIRE: Guy wire shall be galvanized iron malleable wire No. 12 guage.

2H-11 TREE STAKES: Shall be as indicated on the detail drawing.

2H-12 MULCH: Shall be three-eighth inch (3/8") Delaware River Jacks (multi-colored) as produced by Langhorne Stone Company, Langhorne, Pennsylvania, or approved equal. A sample is to be submitted to the Owner's Representative for approval.

2H-13 WATER: Water is not available at the site and the Contractor shall acquire his needs from other sources at his own expense.

2H-14 WEED SHIELD: An approved type of black plastic (.006 mil) shall be used beneath the gravel mulch areas, as indicated on the drawings.

2H-15 PLANT MATERIALS:

1. Inspection: The Contractor shall be responsible for all certificates of inspection of plant materials that may be required by an authority to accompany shipment of plants.

2. Inspection and Samples: All plants shall be subject to inspection and approval by the Owner's Representative at any time.

3. Names and Grades: Names, size and grade of plants shall conform to the Standard of the American Association of Nurserymen, Inc. as published in "American Standard for Nursery Stock" 1959 edition, unless otherwise stated, or specified. No substitution of size or grade shall be permitted except by written permission of the Owner's Representative.

4. Quality: All plants shall be healthy, and typical of their species or variety, well-developed, and heavy branching, and have vigorous root systems in accordance with accepted standards of the American Nurserymen's Association.

5. Measurements: All plants shall conform to all measurements specified on the drawings or the bid proposal for these specifications.

6. Lawn Seed Mix: Shall be as follows:

Kentucky - 31 Fescue	90%
Kentucky Bluegrass	10%

PART III - EXECUTION

2H-16 SCARIFYING OF SUBGRADE: Prior to the placement of topsoil over planting areas, the subgrade shall be made true to grade and the area scarified to a depth of three inches (3"). All resulting debris over two inches (2") in any dimension shall be removed.

2H-17 PLACEMENT OF TOPSOIL: Topsoil, which will have to be hauled in, shall be placed over the scarified and approved subgrade to the depth specified after natural settlement. Blend all topsoil fill back to existing grades.

2H-18 APPLICATION OF LIMESTONE AND FERTILIZER:

1. Agricultural Limestone: Shall be uniformly applied on all areas designated for lawn at the rate of fifty (50) pounds per one thousand (1000) square feet or in sufficient quantity to bring the pH level of the topsoil to a value of pH 6.5 (whichever quantity is greater).

2. Fertilizer: As specified shall be uniformly applied on areas

designated for lawn at a rate of twenty (20) pounds per one thousand (1000) square feet of surface area.

3. Method of Application: Limestone and fertilizer shall be incorporated into the upper four inches (4") of topsoil layer by rotovator or other approved method.

2H-19 SEEDBED PREPARATION: Following the application of the fertilizer, all areas shall be fine-graded by raking to remove any irregularities or undulations on the surface resulting from previous operations. All stones over one inch (1") in diameter and other debris shall be removed and the seedbed left with a uniformly fine texture ready for seed. Before seeding the final grading shall be approved by the Owner's Representative. In the event of a storm, the area shall be reraked before seeding, at the Contractor's expense.

2H-20 SEEDING:

1. Location: Seeding shall take place in all areas of the park designated as LAWN on the drawings. In addition, all areas labeled EXISTING LAWN shall be repaired as may be directed by the Owner's Representative.

2. Seeding shall be done at the rate of nine (9) pounds per one thousand (1000) square feet with an approved spreader on all disturbed areas. Seed shall be sown two (2) times with one-half (1/2) the seed being sown each time. The seed shall be sown in two (2) directions at right angles to each other.

3. Time: In general, the time of seeding shall be from March 15th to May 15th and from August 15th to October 15th. If seeding is accomplished at any other time, the Contractor is forewarned by this Article that nothing less than a dense, strong stand of grass will be accepted, and reseeding will be required as often as the Owner's Representative deems necessary.

4. Rolling: Seeded areas shall be rolled with an empty ballast type roller to firm the seed into the soil.

5. Mulching: Clean straw mulch shall be applied at the rate of two (2) tons per acre and tacked in place with emulsified asphalt.

2H-21 WATERING OF SEEDED AREAS:

1. Shall commence seven (7) to ten (10) days after seeding or sodding operations, and shall be continued weekly until the acceptance of the job by the Owner's Representative.

2. Sufficient water shall be applied to provide the equivalent of one inch (1") of rainfall per application.

2H-22 PLANTING OPERATIONS:

1. Digging and Handling: All plants (B&B) shall have firm natural balls of earth, the diameters conforming to the "American Standard for Nursery Stock" 1959 edition, relative to the size of the plant.

2. Protection: Planting of balled and burlapped plants may be performed at any time of the year when the soil and backfill material are in suitable condition. Any plant material moved between May 1st and October 1st shall receive special care and treatment, as necessary.

3. Excavation of Plant Pits: All rocks, bricks, rubbish, or other deleterious material shall be removed to the depths necessary to permit the proper planting of trees and shrubs; and any resulting pockets or depressions shall be filled with an approved soil and be thoroughly tamped before proceeding with the planting. All tree pits shall be at least two feet (2') greater than the ball or root spread. Shrub pits shall be one foot (1') greater than the ball or root spread. Both tree and shrub pits shall be a depth sufficient to accommodate the depth of the ball plus six inches (6"). Subsoil from plant pits shall be disposed of on site.

4. Backfilling of Plant Pits: Before setting the plants, all tree and shrub pits shall be partly backfilled to a depth of six inches (6") with the specified planting soil mix. After the plant has been properly set, the pit shall be backfilled in six inch (6") layers and thoroughly tamped or puddled. When partially backfilled the burlap shall be removed from the sides and top of the ball and adjusted to prevent the formation of air pockets, but no burlap shall be pulled from under the ball of the plant. Shallow basins, or saucers, the diameter of the hole shall be formed around the trees and shrubs.

5. Setting Plants: All plants shall be set at such a level that, after settlement, a natural relationship of the crown of the plant with the surrounding ground will be established. Care shall be exercised to set the plants plumb. Wires and metal containers shall be removed prior to setting of plants.

6. Guying: All shade trees shall be staked as detailed.

7. Wrapping: All deciduous trees shall be wrapped and securely tied at the bottom and top, and at two inch (2") intervals along the trunk. The trunk shall be painted with 50% Sevin solution prior to wrapping.

8. Pruning: All plants shall be neatly pruned after planting in accordance with the best standards of practice. At least one-third (1/3) of the wood of deciduous plants shall be removed by thinning branches, but no leaders shall be cut.

2H-23 WATERING OF PLANTS: Plants shall be carefully watered immediately after planting. Water shall be applied only by open hose at low pressure.

2H-24 MULCHING: Upon completion of the planting operation. All planting beds, trees, and shrubs shall be mulched with a two inch (2") layer of the type mulch specified for the area. Where red shale mulch is used, a layer of plastic, as previously specified, shall be installed beneath the stone except for around the plants.

2H-25 CLEANUP: Throughout the course of seeding and planting, excess and waste materials shall be continuously and promptly removed from the site. All precautions shall be taken to avoid damage to existing facilities.

2H-26 ESTABLISHMENT, MAINTENANCE, AND GUARANTEE OF PLANTING:

1. Responsibility: The Contractor shall be responsible for the proper care of all trees, shrubs, and ground cover during the period when these plants are becoming established. This period shall begin at the time that any individual phase of this work is completed and continue for a period of twelve (12) months from the date that all work under this contract is complete as certified by the Environmental Designer and such shall be considered the "Guarantee Period."

2. Condition of Plants: All plants shall be kept in a healthy condition by pruning, spraying, adjusting of guys and by any other necessary operation of maintenance. Plants which die or become unhealthy from any cause, or appear to be in a badly impaired condition shall be removed promptly and replaced as directed by the Environmental Designer, and any plants that settle below or raise above the desired finished grades shall be reset at the desired proper grades. All replacements shall be plants of the same kind, size and quality as originally specified in the plant list, and they shall be furnished, planted, and guyed and maintained as specified at no additional cost. The Contractor will not be responsible for plants destroyed or lost due to vandalism, or acts of neglect on the part of others.

3. Conclusion: At the conclusion of the "Guarantee Period" a final inspection of all planting included in this contract will be made by the Environmental Designer. At that time, any plant found not to be in a healthy growing condition, broken, damaged, or otherwise in such a condition as to impair or destroy the symetrical or other desired appearance as determined by the Environmental Designer shall be replaced.

2H-27 ESTABLISHEMENT, MAINTENANCE AND GUARANTEE OF SEEDED AREAS:

1. Maintenance: The Contractor shall be responsible for the seeded areas during the period when the turf is becoming established. The period shall begin at the time that the seeding is substantially completed and continue for a period of forty five (45) days. The grass shall be cut at a two inch (2") height when it reaches a height of three inches (3"), and each subsequent time until the guarantee period has expired. Such period shall be considered the "Guarantee Period of Lawn."

2. Conclusion: At the conclusion of the "Guarantee Period," a final inspection of the work will be made by the Owner's Representative. All areas designated for grass shall be covered with a stand of grass acceptable to the Owner's Representative. All areas not accepted shall be repaired and reseeded as specified herein. Any bare areas of one (1) square foot and larger shall be reworked and seeded, as will areas of sparse growth. Prior to turning over to the Owner, the lawn will be refertilized as previously specified.

2H-28 AREAS OF NATURAL PLANT SUCCESSION:

1. Intent: Areas delineated for the promotion of Natural Plant Succession shall be executed upon initiation of construction activity. The cross-hatched areas define the limits of areas which are to be left undisturbed during construction, and not maintained thereafter (except to remove plant materials which are considered hazardous to humans - e.g. poison ivy - or other desirable plant materials which may be contained therein over time); i.e. no mowing of existing lawn in these areas subsequent to the establishment.

2. Establishment: The limits of these areas are to be staked out in the field by the Contractor, subject to the review, approval and potential direction of adjustments by the Owner's Representative.

3. Protection: Upon the attainment of the approval of the Owner's Representative, the Contractor shall erect an approved type fence around the entire perimeter for the purpose of insuring their protection.

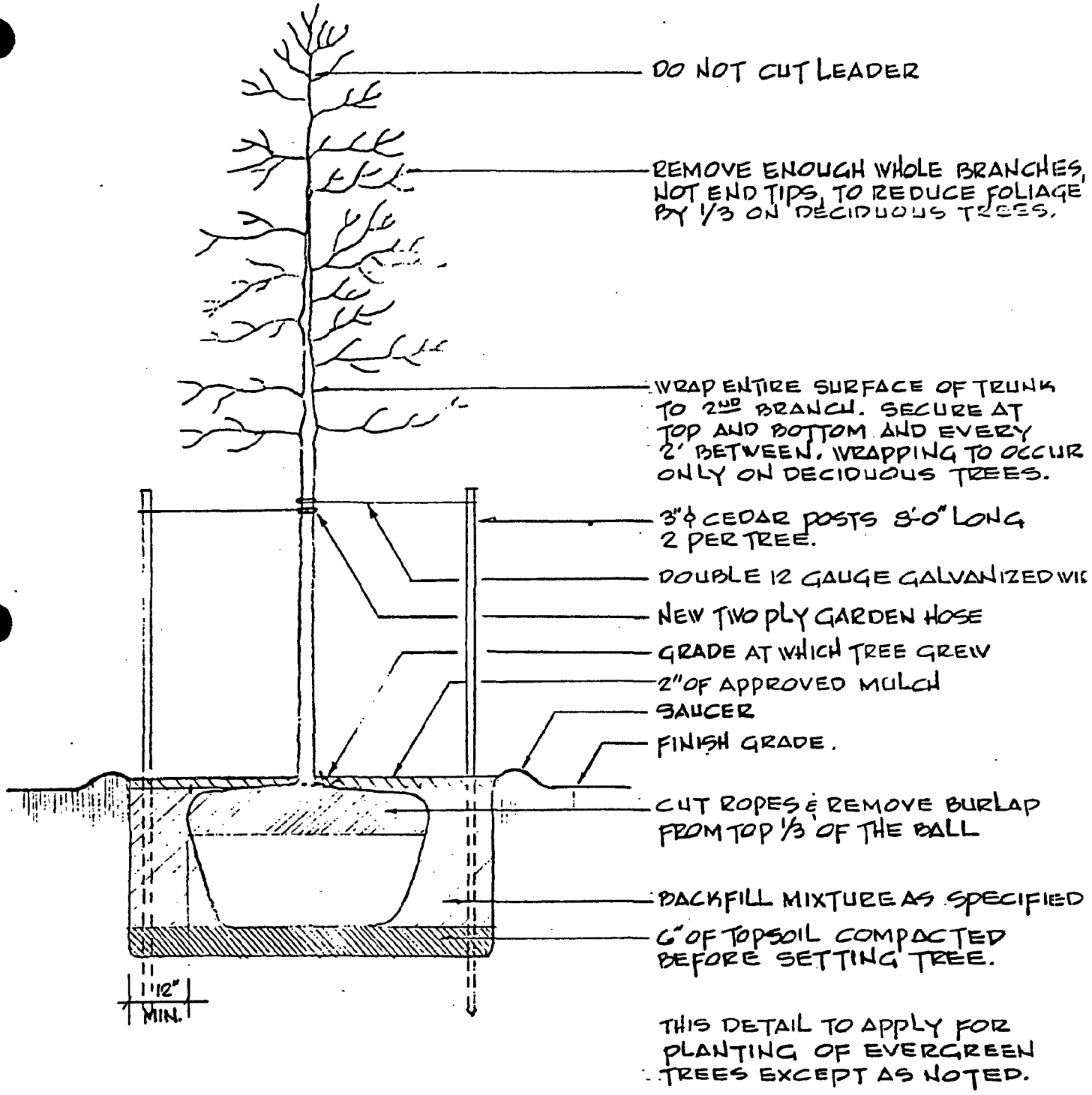

THIS DETAIL TO APPLY FOR PLANTING OF EVERGREEN TREES EXCEPT AS NOTED.

1 TREE PLANTING & STAKING DETAIL

NO SCALE

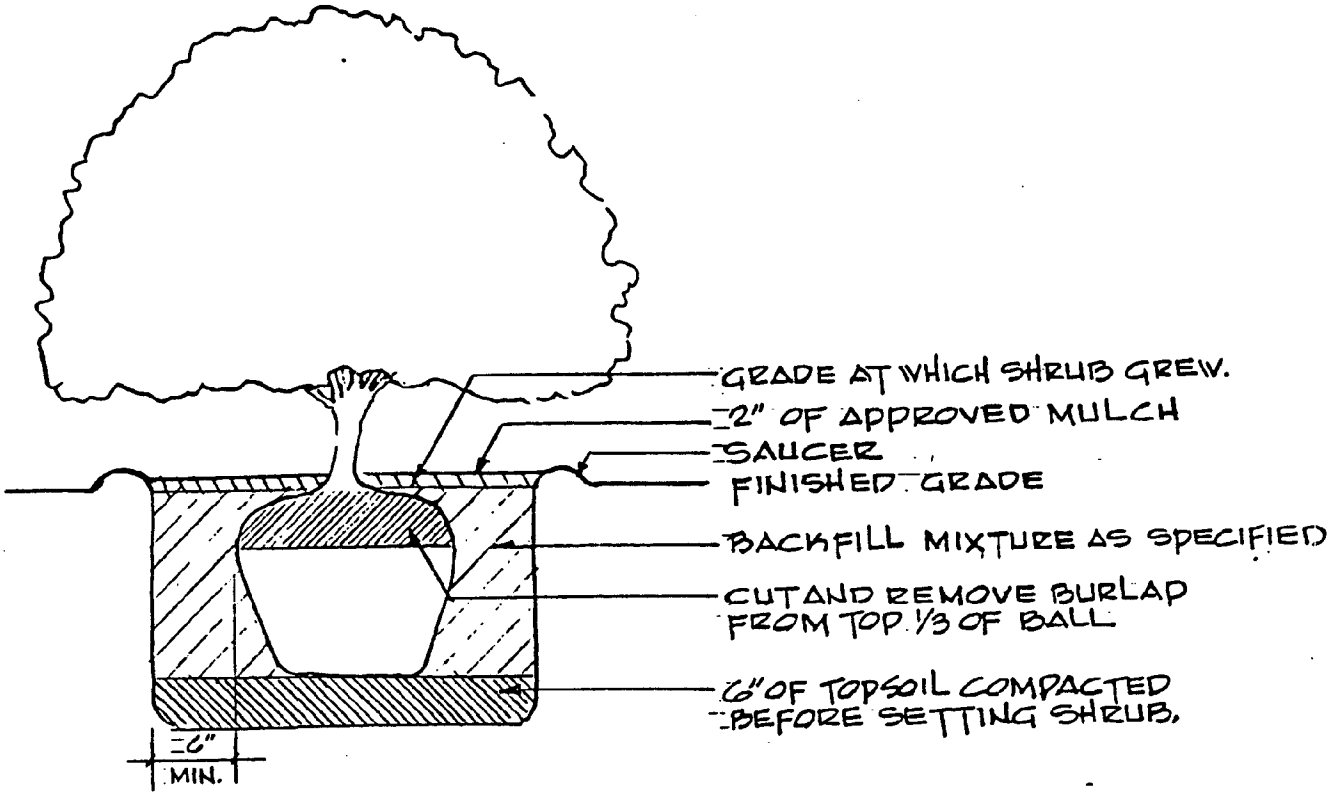

2 SHRUB PLANTING DETAIL

NO SCALE

SECTION 2I - FENCING

PART I - GENERAL

2I-1 SCOPE: The Contractor shall furnish labor, superintendence, material, tools, equipment and all means of construction necessary to complete all work specified below and depicted on all drawings or reasonably implied therefrom, in a first class, efficient workmanlike manner. The items of work to be performed shall include but are not limited to:

1. Excavation for post holes as necessary.
2. Installation of new fabric posts and fittings.
3. Baseball backstop.
4. Cleanup.

2I-2 CO-ORDINATION: The work performed under this section shall be carefully co-ordinated with all other Site Work.

PART II - MATERIALS

2I-3 FABRIC: Fabric material shall be zinc coated steel wire fabric (galvanized after weaving) conforming to ASTM A-392. Fabric shall be a 9 gauge wire woven in a two inch (2") mesh with a minimum tensile strength of 75,000 p.s.i. Top and bottom selvages to have a barbed finish. Fabric to be black vinyl coated as manufactured by Colorguard Corporation, Raritan, New Jersey, or approved equal.

2I-4 POSTS:

1. Line posts shall be hot dip galvanized two and one-half inch (2½") o.d. posts with a weight of 3.65 lbs./lineal foot. No used, re-rolled or open seam material will be permitted in posts or rails.

2. Terminal Posts: End, corner, and gate posts hot dip galvanized pipe three inches (3") o.d., with a weight of 5.79 lbs. per lineal foot.

2I-5 FITTINGS-RAILS-TENSION WIRES:

1. All fittings, rails and tension wires shall be hot dipped galvanized new material.

2. Tension bars shall be 3/16" x 3/4".

3. Tension bands shall be 7/8" x 14 gauge steel.

4. Dome caps shall be malleable or semi-steel tops.

5. Top rail shall be hot dipped galvanized pipe 1-5/8" o.d., weight 2.27 lbs. per lineal foot and provided with couplings every twenty feet (20'). Couplings to be outside sleeve type at least seven inches (7") in length.

6. Corner braces to be hot dipped galvanized of same size as the top rail.

7. Rods shall be 3/8" diameter and be hot dipped galvanized.

8. Tension wire shall be a six (6) guage galvanized coiled spring wire. Fasteners shall be galvanized steel wire ties.

2I-6 BACKSTOP: Shall be hot dipped galvanized Model No. 551-521 with hood as manufactured by P.C.A. Industries, Inc., Grissan Drive, St. Louis, Missouri, or approved equal.

PART III - EXECUTION

2I-7 POSTS: Posts are to be spaced in line of fence no farther than ten feet (10') on center and set in concrete footings so as to furnish a foundation and support sufficient to withstand any strain or shock ordinarily brought to bear on a fence of this character. A liberal factor of safety is to be provided. The plans show the minimum size that will be acceptable. Concrete strength shall be 3300 p.s.i. after 28-day test.

Tops: All posts are to be fitted with specified tops; base of top to carry apron around outside of post.

2I-8 TOP RAIL: Top rail to be provided with couplings approximately every twenty feet (20'). One (1) coupling in every five (5) is to contain a heavy spring to take up the expansion and contraction of the top rail. The top rail is to pass through the base of line post tops and form a continuous brace from end to end of each stretch of fence. The top rail is to be securely fastened to terminal posts by suitable pressed steel connections.

2I-9 BRACES: Horizontal braces shall be furnished for the end and corner posts; brace materials same as top rail, spaced midway between the top rail and the ground, and to extend from the terminal post to the first adjacent line post. Braces are to be securely fastened to the posts by suitable pressed steel connections, then trussed from the line post

back to the terminal post with a three-eighths inch (3/8") round rod, as specified.

2I-10 FABRIC: The fabric shall be attached to the terminal posts with tension bars and have steel tension bands spaced no further than fifteen inches (15") o.c. The fabric shall be attached to the line posts and the top rail with nine (9) guage galvanized steel wire ties spaced fifteen inches (15") o.c.

2I-11 TENSION WIRES: The specified tension wire is to be stretched along the bottom of the chain link fabric approximately four inches (4") from the bottom edge and fastened every two feet (2') with a galvanized steel wire tie.

2I-12 SUBMISSIONS: The Contractor shall submit full information concerning the manufacturer's specifications for the fence and other pertinent data for approval by the Owner's Representative prior to installation.

2I-13 BACKSTOP: An approved type backstop is to be set at the location as indicated on the drawings. The backstop is to be set level and plumb with appropriate sized concrete footings. Any concrete splashed on the fabric or posts shall be cleaned off.

2I-14 CLEANUP: At the conclusion of the fence work, all debris and pieces of fence shall be picked up and removed from the area.

SECTION 2J - PARK STRUCTURE

2J-1 SCOPE: The Contractor shall furnish all labor, superintendence, materials, tools, equipment, and all means of construction necessary to complete all work specified below and depicted on all drawings, or reasonably implied therefrom in a first class, efficient and workmanlike manner. The items of work to be performed shall include but are not limited to:

a. Poligon Hex S36 Park Shelter Less Shingles
b. Masonry
c. Shingles
d. Painting
e. Hollow Metal Doors and Frames
f. Toilet Accessories
g. Plumbing
h. Electrical

2J-2 POLIGON HEX S36 PARK SHELTER, LESS SHINGLES:

See Insert - following pages.

2J-3 MASONRY:

All exterior concrete block walls shall be hollow "split face" with matching color mortar. Color to be selected by the Owner's Representative.

All interior concrete block walls shall be hollow load bearing ASTM C-90 with Portland cement mortar.

All concrete block walls shall be cleaned of excess mortar with fiber brushes and clear water or cleaning agent used in accordance with the manufacturer's recommendations.

2J-4 SHINGLES:

Entire surface of roof shall be covered with 15# asphalt impregnated felt before application of shingles.

Roof shingles shall be Bird & Son Architect 70 or approved equal with hip and ridge shingles supplied by manufacturer.

All shingles shall be installed in accordance with manufacturer's recommendations.

poligon®

A DIVISION OF W. H. PORTER, INC.
P.O. Box 1112-B • Holland, MI 49423 • (616) 399-1963

INTRODUCTION	PAGE	1.0
FRAME ASSEMBLY	PAGE	2.0
	PAGE	2.1
	PAGE	2.2
ROOF & ACCESSORIES		
PURLINS	PAGE	3.0
ROOF PANELS (PARK SHELTER)	PAGE	3.1A
ROOF PANELS (INSULATED)	PAGE	3.1B
ROOFING INSTALLATION INSTRUCTIONS	PAGE	4.0
ROOF CAP ENCLOSURES	PAGE	5.0

* SPECIFICATIONS - HEX 36 *

FRAME shall be designed and certified to carry a 30 pound per square foot live load in accordance with the Uniform Building Code (1976), BOCA Building Code (1975), South Florida Building Code (1979) and Seismic Zone Four of the Uniform Building Code (for California).

COLUMNS shall be 6" x 6" structural steel tubes.

COMPRESSION RING shall be hexagonal shaped with a dimension of 48" across the corners formed from an 8" channel 11.5#/ft.

TRUSS MEMBERS shall be 2½" x 8" structural steel cees welded to form a 5" x 8" steel tube.

TENSION MEMBERS shall be structural steel cees 8" x 2½" welded together to form a 5" x 8" steel tube.

The structural steel frame is to be shop fabricated with all bolted connections to eliminate field welding. All steel shall be shop primed with (1) coat of rust-inhibative red oxide primer. Two finish coats of exterior metal paint shall be field applied by the contractor per color schedule. All welded joints shall be made to conform to ASTM standards and AISC specifications. Frame structure shall be furnished with all necessary nuts, bolts and fastening devices for total assembly of parts. All steel columns shall be anchored to foundations with 3/4" anchor bolts on the floor surface. Anchor bolts to be furnished and shipped immediately upon receipt of order.

PARK SHELTER ROOFS shall be 3/4" waferboard. Roof panels shall be supported on 4 x 4 and 4 x 8 douglas fir (or approved equal by manufacturer) wood purlins set radially from steel support to steel support. Purlins shall be set in 18 gauge purlin hangers.

ALL ROOF SYSTEMS to be furnished with a 1" redwood fascia at the eave edge. Roof system shall be 3-in-1 Jamaican Brown asphalt shingles, 240 pound, over 15 pound roof felt over deck. Roof pitch shall 3½:12. Shingles will be field applied by the contractor. All flashings, fastening devices and sealants required to be used in connection with the shell building shall be furnished.

CUPOLA & SKYLIGHT are optional.

POLIGON
A DIVISION OF W. H PORTER, INC.

INSTALLATION INSTRUCTIONS for
HEXAGON BUILDINGS

Read !!

WE RECOMMEND THAT YOU TAKE THE TIME TO READ THROUGH THE INSTRUCTIONS TO FAMILIARIZE YOURSELF WITH THE STRUCTURE AND THE TASK BEFORE YOU. THE ASSEMBLY OF THE STRUCTURE IS REALLY QUITE SIMPLE, AND WITH BASIC CONSTRUCTION SKILLS, YOU WILL FIND YOUR POLIGON™ AS EXCITING A STRUCTURE AS IT GOES UP AS IT WILL PROVE TO BE FOR THE YEARS TO COME.

THE FOLLOWING LIST OF TOOLS WILL PROVE HELPFUL IN ERECTION OF YOUR POLIGON™.

TOOL LIST

(2) 1-14/", 1-1/8", 15/16" & 3/8" SOCKETS WITH RATCHET WRENCH
110 A.C. POWER FOR ELECTRIC DRILL *
LARGE SCREW DRIVER, REGULAR & PHILIPS
LEVEL
PLUMB-BOB
DRIFT-PIN FOR 3/4" BOLT (SPUD)
COME ALONG
CHALK LINE
FRAMING SQUARE AND BEVEL SQUARE
SCAFFOLDING (A MUST WHEN CRANES OR LIFTS ARE NOT USED)
(TO BUILD UP WOOD SCAFFOLDING AS SHOWN IN INSTRUCTIONS.)
CAULKING GUN
12" CRESCENT WRENCH
HAMMER
50' STEEL TAPE
CROW BAR
CROSS CUT SAW
WOOD CHISELS
UTILITY KNIFE
DRILLS AND DRILL MOTOR
(INSULATED ROOF ONLY - WHEN LONG DRILLS 3/16" X 6" ARE REQUIRED, (2) BITS ARE FURNISHED WITH THE BUILDING.)
SMALL DRILL SET
PAINT BRUSHES AND PAINT
PHILIPS DRILL BIT

* OPTIONAL - IT IS FREQUENTLY HANDY OR LABOR-SAVING TO HAVE ACCESS TO A POWER LIFT, SMALL CRANE, OR BOOM TRUCK, A CUTTING TORCH, A POWER WRENCH OR SCREW DRIVER, AND A POWER HAND SAW. ALSO BAR CLAMP. (SEE FIG. K)
IF ELECTRIC POWER IS NOT AVAILABLE, POWER DRIVEN FASTENERS (NOT FURNISHED) CAN BE USED TO SECURE FLAKEBOARD TO ROOF FRAME.

WARNING

USE EXTREME CAUTION IN ALL ERECTION PROCEDURES. INSTRUCTIONS CAN NOT COVER WARNINGS AGAINST ALL POSSIBILITIES OF INJURY. SOME OF THE MORE IMPORTANT POINTS AT WHICH SPECIAL CARE AND ATTENTION SHOULD BE EXERCISED:

A. USE ONLY RUGGED, WELL BRACED SCAFFOLD. DO NOT ATTEMPT TO SET FRAME WITH LESS THAN ADEQUATE SUPPORT.
B. UNTIL AT LEAST 3 "LEGS" OF THE FRAME ARE SET AND BOLTED TO THE COMPRESSION RING, THE DANGER OF TIPPING OR FALLING IS CRITICAL.
C. USE CARE IN LIFTING ALL PARTS, WHETHER BY HAND OR MACHINE.
D. CARE SHOULD BE TAKEN IN STORING PARTS.
E. STORE FRAME, WALL AND ROOF PANELS OUT OF THE WEATHER UNTIL READY TO USE.

REMEMBER: THE TIME REQUIRED TO USE PROPER CARE WON'T DELAY AS MUCH AS AN INJURY.

ASSEMBLY INSTRUCTIONS

BEGIN BY CAREFULLY CHECKING ALL PARTS AGAINST THE SHIPPING ORDER. THIS WILL HELP TO ACQUAINT YOU WITH THE PARTS AND GIVE YOU A DOUBLE CHECK ON THE POSSIBILITY THAT ANY PARTS HAVE BEEN LOST, DAMAGED OR MIS-SHIPPED. NOTIFY W. H. PORTER, INC. IMMEDIATELY OF ANY SHORTAGES.

NOTE: THE DELIVERING CARRIER IS RESPONSIBLE FOR DAMAGES AND SHORTAGES OCCURRING DURING SHIPPING. NOTATIONS AS TO DAMAGE AND SHORTAGES MUST BE NOTED ON THE "BILL OF LADING" AT TIME OF DELIVERY. DELIVERING DRIVER SHOULD INITIAL ANY SUCH NOTATIONS.

NOW THAT YOUR FOUNDATION IS CONSTRUCTED, YOU ARE READY TO PROCEED WITH YOUR NEW POLIGON™.

STEP 1 - STEEL FRAME

THE FIRST THING YOU SHOULD DO IS CHECK THE LOCATION OF THE ANCHOR BOLTS TO MAKE SURE THEY ARE WITHIN 3/4" DIMENSIONS SHOWN. IF NOT, THEY WILL HAVE TO BE REMOVED, REDRILLED AND EXPANSION TYPE BOLTS INSTALLED.

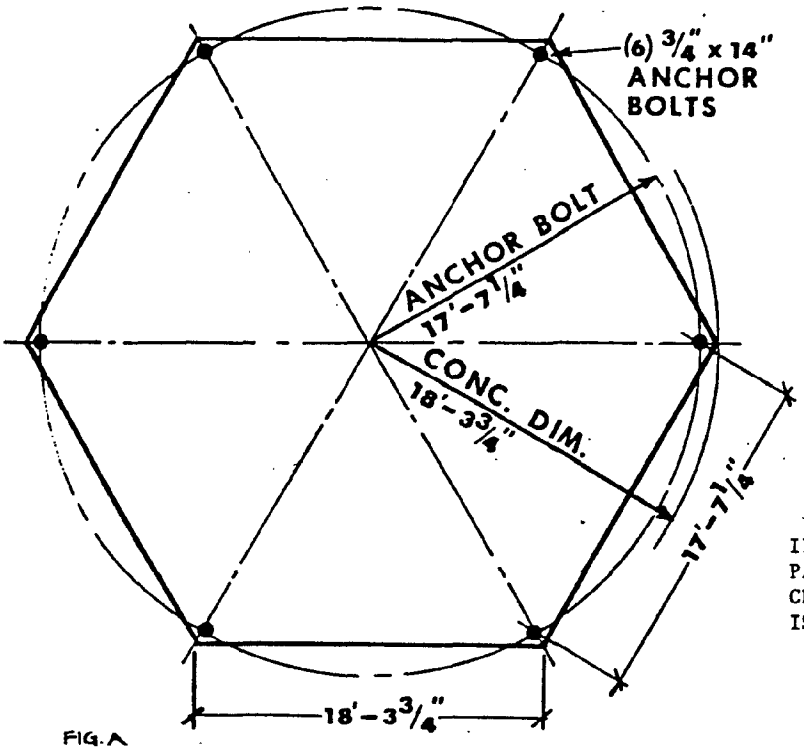

FIG. A

IF BUILDING IS TO BE ENCLOSED WITH PANELS, SEE FOUNDATION PLAN AND CHECK SIZE. THE CONCRETE SLAB SIZE IS VERY CRITICAL WHEN WALLS ARE USED.

HERE IS A DRAWING SHOWING YOU WHAT YOUR COMPLETED STEEL FRAME SHOULD LOOK LIKE. STUDY THIS AND FAMILIARIZE YOURSELF WITH THE NAMES OF THE MEMBERS. WE WILL BE REFERRING TO THESE ITEMS THROUGHOUT THE INSTALLATION INSTRUCTIONS.

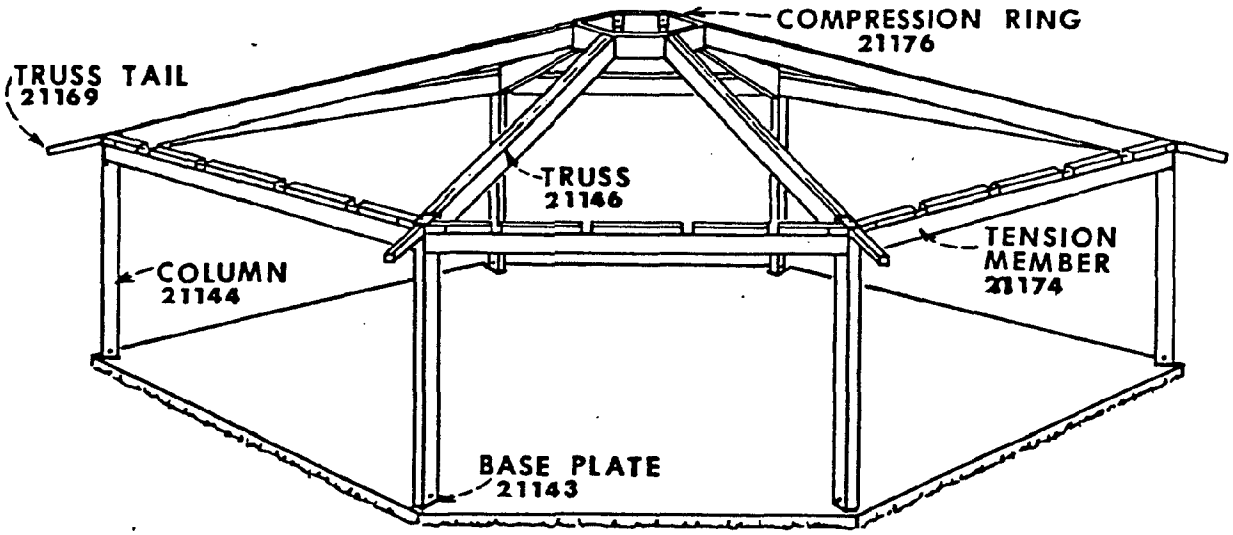

FIG. B

HEX 36

STEP 2 - STEEL FRAME

SET BASE PLATES OVER ANCHOR BOLTS -- BOLT IN PLACE WITH 3/4" HEX. NUTS WITH FLAT WASHERS. USING 1-1/8" SOCKET WRENCH, TIGHTEN BOLTS SNUG. (DO NOT "OVER TIGHTEN" AS IT MAY BE NECESSARY TO FORCE COLUMNS LATERALLY WHEN "PLUMBING" FRAME AFTER ASSEMBLY.)

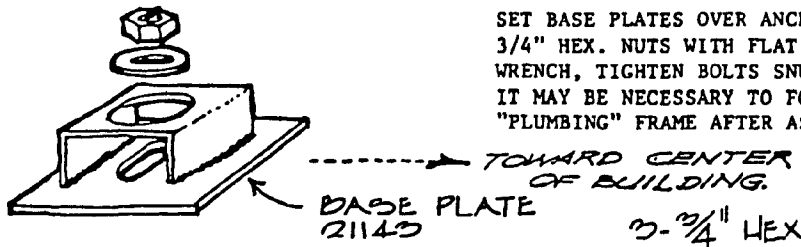

FIG. C

STEP 3 - STEEL FRAME

ASSEMBLE COLUMNS TO TRUSS AT "KNEE JOINTS" TO FORM SIX RIGID FRAMES. 3 BOLTS ARE REQUIRED AT EACH CONNECTION.

FOR EASE OF ASSEMBLY, LAY COLUMN AND TRUSS FLAT AND BOLT TOGETHER.

FULLY TIGHTEN BOLTS AND NUTS AT THIS CONNECTION, MAKING CERTAIN THAT THE PARTS ARE ALIGNED SIDE-WISE AND BOLTS AND NUTS ARE TIGHTENED UNIFORMLY.

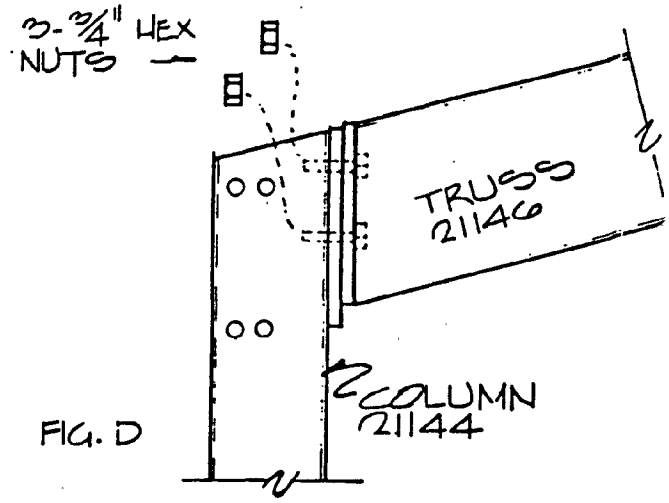

FIG. D

STEP 4 - STEEL FRAME

BUILD SCAFFOLDING TO HEIGHT SHOWN. SCAFFOLD MAY BE BUILT-UP WITH WOOD OR IT MAY BE STEEL. MANY LOCALITIES HAVE A RENTAL AGENCY WHERE SUCH EQUIPMENT MAY BE RENTED.

DO NOT ATTEMPT TO BUILD SCAFFOLD TO BOTTOM OF COMPRESSION RING. TIPPING RIGID FRAMES INTO PLACE WILL BECOME TOO DIFFICULT.

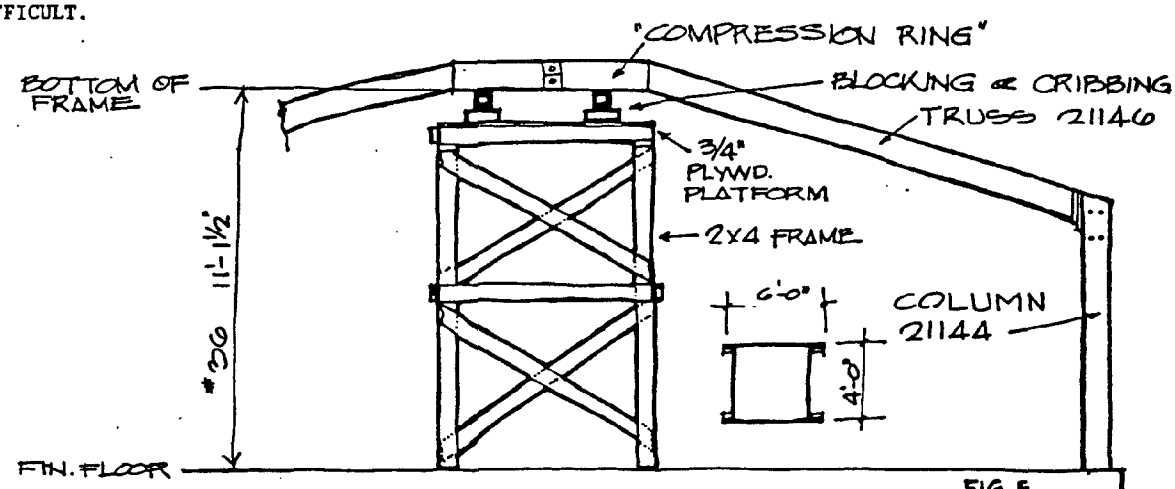

FIG. E

STEP 5 - STEEL FRAME

PLACE COMPRESSION RING ON SCAFFOLD AND BLOCK-UP AS SHOWN. LIFT ASSEMBLED RIGID FRAMES TO SCAFFOLD AND BOLT IN PLACE ON COMPRESSING RING. COLUMN SHOULD BE SET STRADDLING THE ANCHOR (BASE PLATE) AT THIS TIME.

BOLT RIGID FRAMES IN PLACE IN ORDER SHOWN.

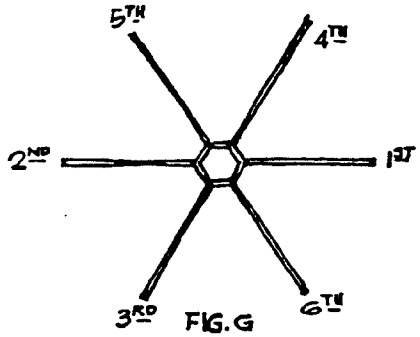

FIG. G

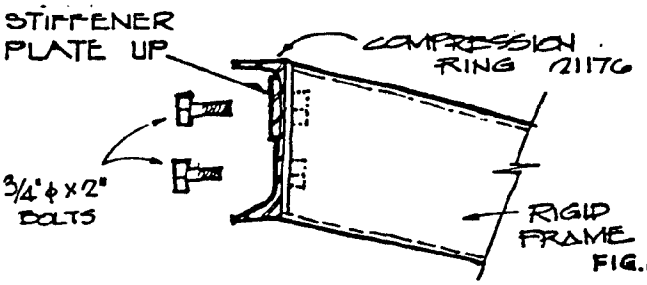

FIG. F

STEP 6 - STEEL FRAME

CONTINUE PLACING RIGID COLUMN TRUSS ASSEMBLIES UNTIL ALL SIX ARE PLACED AS SHOWN. INSERT 3/4" DIA. X 7" BOLT THROUGH COLUMN AND BASE PLATE.

DO NOT TIGHTEN BOLTS THROUGH COLUMNS AT THIS TIME.

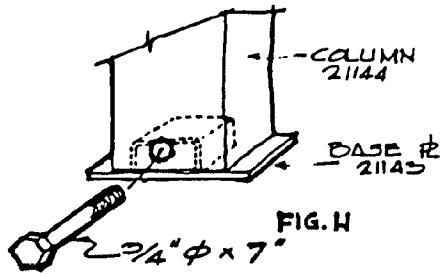

FIG. H

STEP 7 - STEEL FRAME

NEXT BEGIN PLACING TENSION MEMBER IN PLACE. IT MAY ALSO BE HELPFUL TO USE A "DRIFT PIN" IN POSITIONING THESE MEMBERS.

AS THIS SKETCH SHOWS, EACH SET OF BOLTS HOLDS TWO TENSION MEMBERS IN PLACE - SO DO NOT PUT NUTS ON UNTIL YOU HAVE BOTH MEMBERS SET.

STEP 8 - STEEL FRAME

FASTEN U-CLIP ENCLOSURE IN PLACE ON FACE OF COLUMN USING 1" SCREWS. SEE FIG. I.

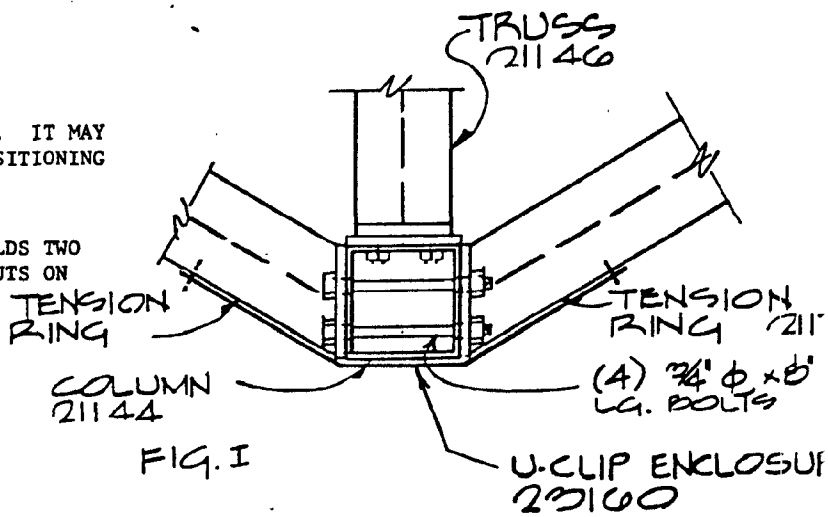

FIG. I

STEP 9 - STEEL FRAME

BOLT TRUSS TAILS TO OUTSIDE FACE OF COLUMNS AS SHOWN IN FIGURE J .

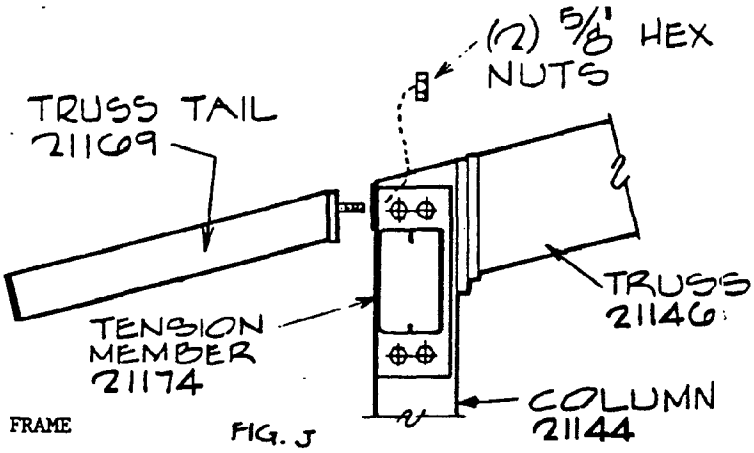

FIG. J

STEP 10 - STEEL FRAME

YOU HAVE NOW COMPLETED THE ASSEMBLY OF THE STEEL FRAME AND ARE READY TO "PLUMB" THE STRUCTURE.

PLUMB COLUMNS RADIALLY BY PLACING A "COME-ALONG" (AVAILABLE FROM YOUR EQUIPMENT RENTAL AGENCY) AS SHOWN - RACKING BUILDING AS REQUIRED.

FINALLY - TIGHTEN ALL NUTS AND BOLTS FULLY AND YOUR FRAME IS FINISHED. (SEE FIG. B)

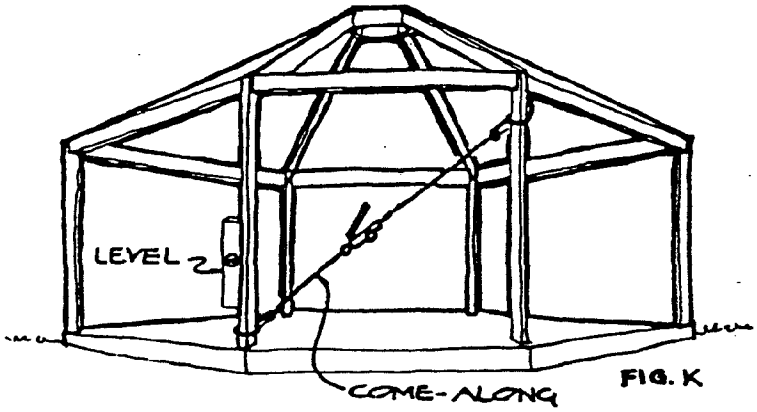

FIG. K

IF WALL PANELS ARE TO BE INSTALLED, EXTRA ALIGNMENT TO FOUNDATION IS REQUIRED. SEE WALL PANEL INSTALLATION INSTRUCTIONS.

STEP 1 - PURLIN HANGERS

TO BEGIN ASSEMBLY OF ROOF, SET PURLIN HANGERS AT DIMENSION SHOWN. DO NOT FASTEN HANGER UNTIL ALL ARE TENTATIVELY PLACED.

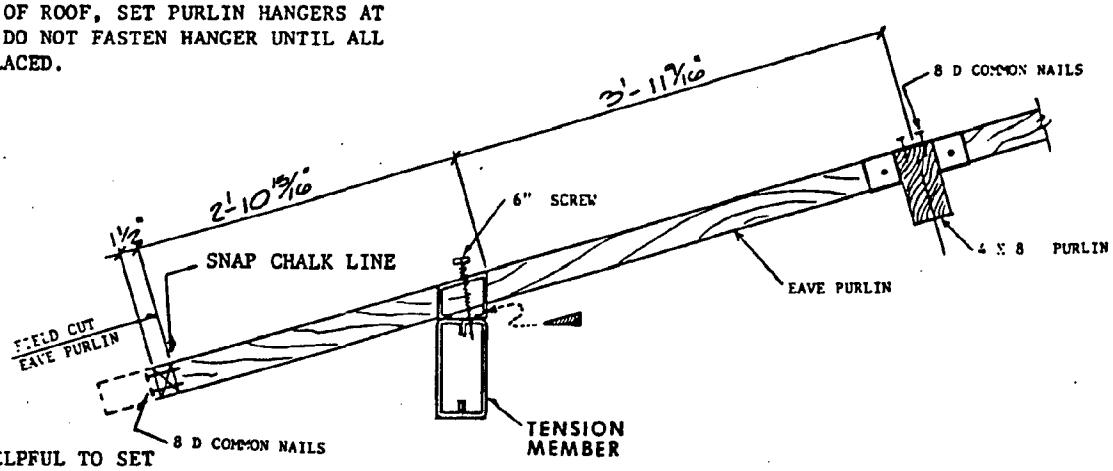

YOU MAY FIND IT HELPFUL TO SET WOOD PURLINS IN HANGER BEFORE FASTENING TO CHECK YOUR DIMENSIONS.

FIND POSITION OF PURLIN HANGER ON TRUSS BY A PERPENDICULAR MEASUREMENT AT ROOF PLANE TO TENSION RING.

SECTION AA

STEP 2 - PURLINS

SET ALL PURLINS IN PURLIN HANGERS AND NAIL THROUGH SIDE OF HANGER INTO PURLIN WITH #8D COMMON.

DRILL 3/16" HOLE THROUGH PURLIN HANGER INTO TRUSS MEMBERS AND FASTEN WITH #14 x 1" SCREW.

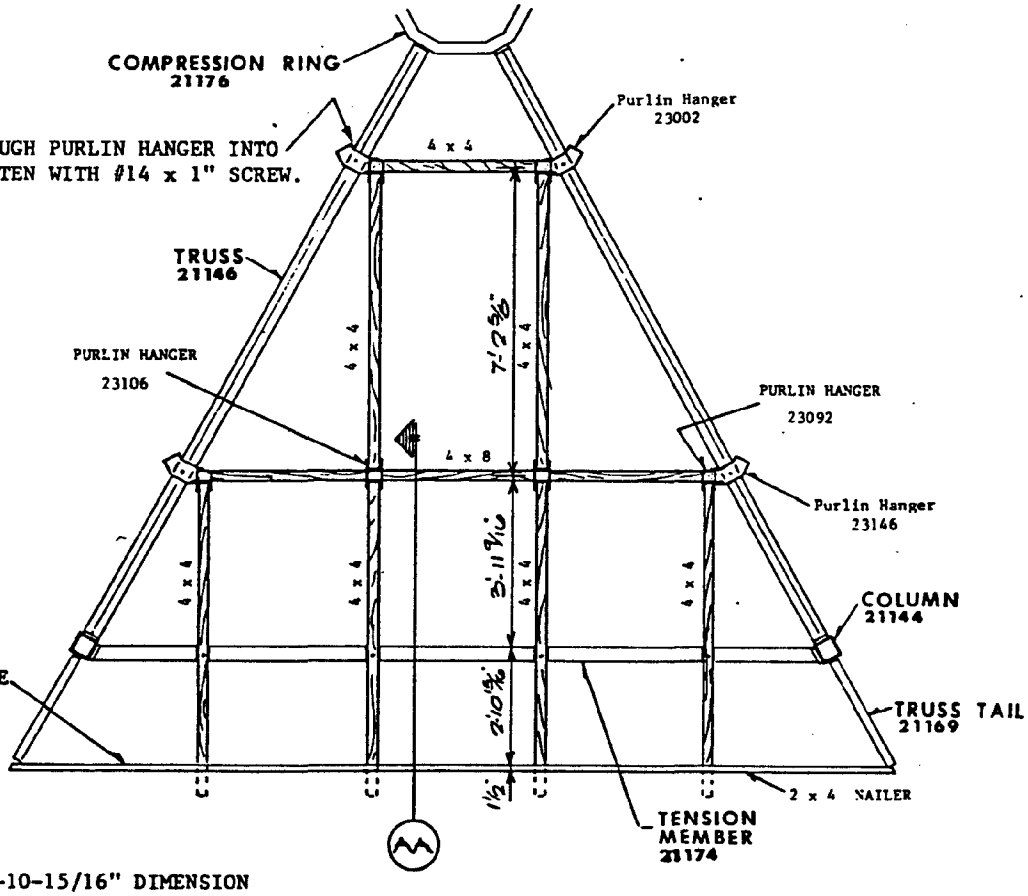

STEP 3 - PURLINS

SNAP CHALK LINE AT 2'-10-15/16" DIMENSION AND FIELD CUT EAVE PURLINS AS SHOWN ON PURLIN LAYOUT AND SECTION AA.

PURLIN LAYOUT

STEP 4 - ROOF PANELS

SET EAVE PANEL IN PLACE LINING UP WITH 2 X 4 NAILER. FASTEN WITH #14 SCREWS INTO TENSION MEMBER U-CLIP AND 8d COMMON NAILS INTO WOOD PURLINS.

NOTE: SEE STEP 5

WARNING!!

DO NOT SIT OR STAND ON EAVE PANEL OVERHANG UNTIL ALL PANELS HAVE BEEN SET AND ARE FASTENED DOWN.

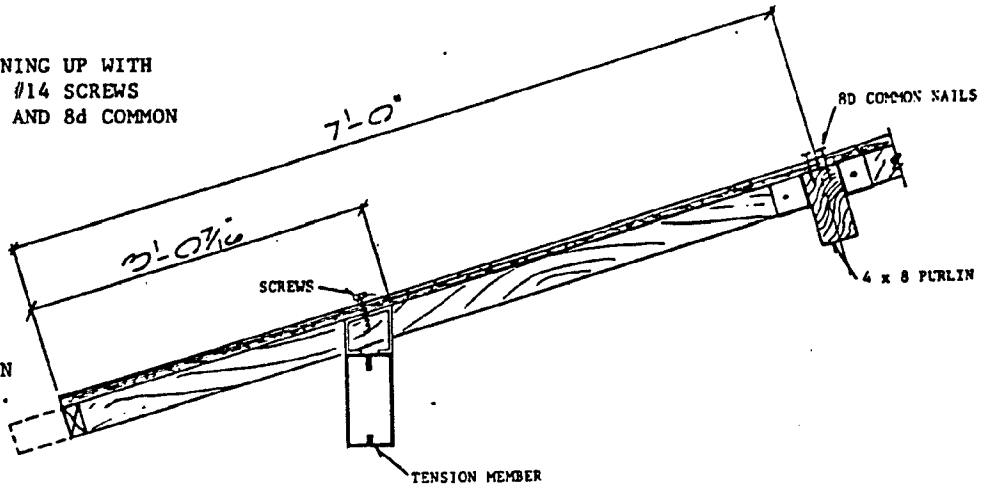

SECTION CC

CONTINUE SETTING ROOF PANELS ACCORDING TO PANEL LYAOUT UNTIL ALL PANELS ARE SET AND NAILED TO WOOD PURLINS AND SCREWED TO STEEL FRAMING.

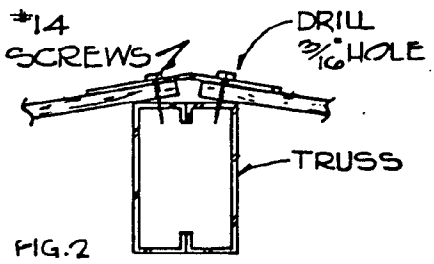

FIG.2

STEP 5 - ROOF PANELS

FASTEN TRUSS BATTENS IN PLACE AS SHOWN. (SEE FIG. 2) SECURE TO STEEL MEMBERS WITH #14 SCREWS.

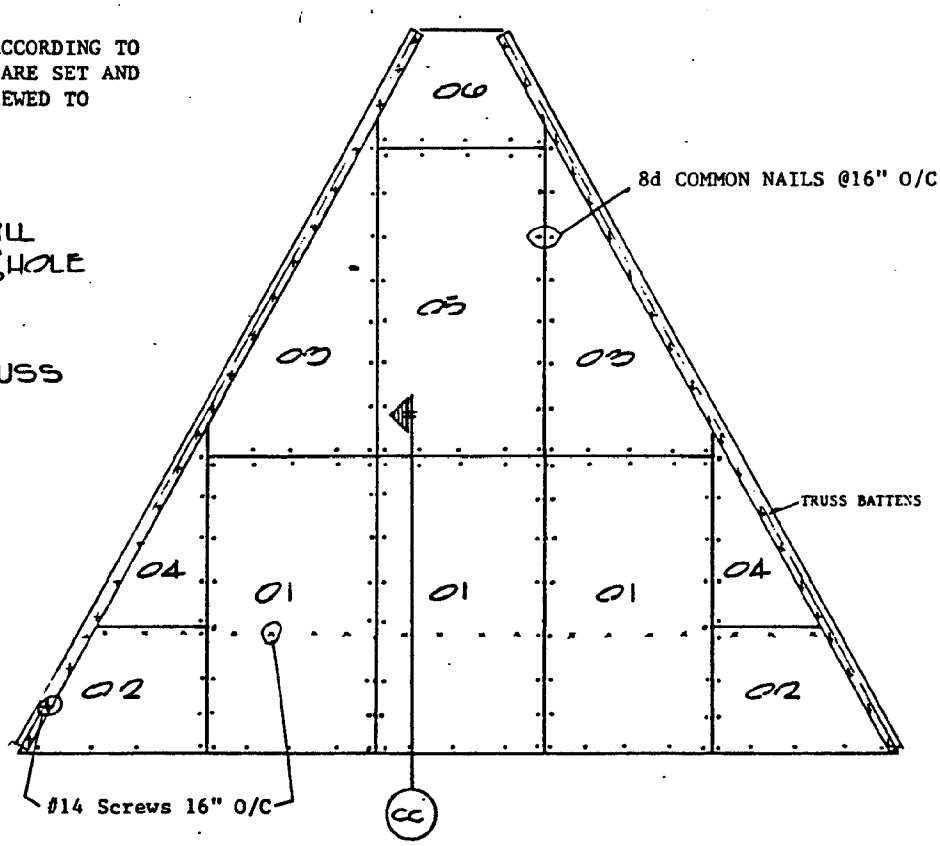

ROOF PANEL LAYOUT

STEP 6 - ROOF PANELS

NAIL REDWOOD FASCIA IN PLACE AS SHOWN IN FIG. 3.

USE ARDOX NAILS

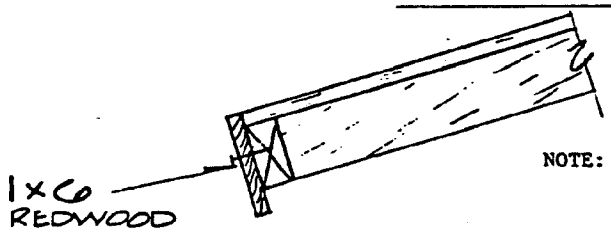

FIG.3

NOTE: COMPOUND ANGLE ON FASCIA BOARDS HAVE BEEN SHOP CUT. EXACT LENGTH WILL HAVE TO BE FIELD CUT.

STEP 4 - ROOF PANELS

SET EAVE PANEL IN PLACE LINING UP WITH 2 X 4 NAILER. FASTEN WITH 6" SCREWS INTO TENSION MEMBER U-CLIP AND 7" NAILS INTO WOOD PURLINS.

NOTE: SEE STEP 5

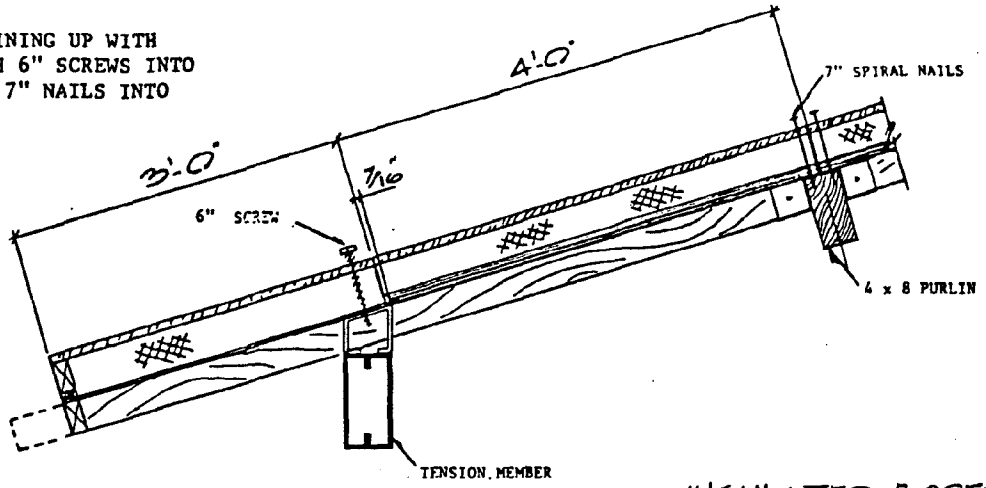

WARNING!!

DO NOT SIT OR STAND ON EAVE PANEL OVERHANG UNTIL ALL PANELS HAVE BEEN SET AND ARE FASTENED DOWN.

SECTION CC

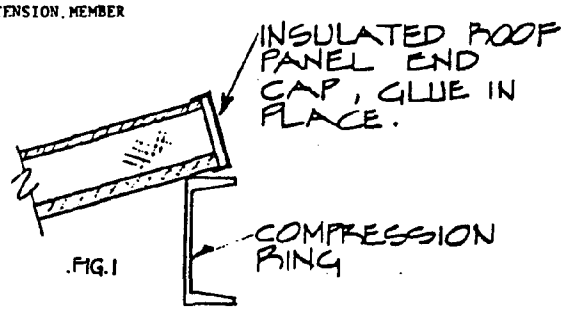

FIG. 1

CONTINUE SETTING ROOF PANELS ACCORDING TO PANEL LAYOUT UNTIL ALL PANELS ARE SET AND NAILED TO WOOD PURLINS AND SCREWED TO STEEL FRAMING.

STEP 6 - ROOF PANELS

WITH ROOF PANELS IN PLACE, FASTEN ROOF PANEL END CAP AS SHOWN IN FIG. 1.

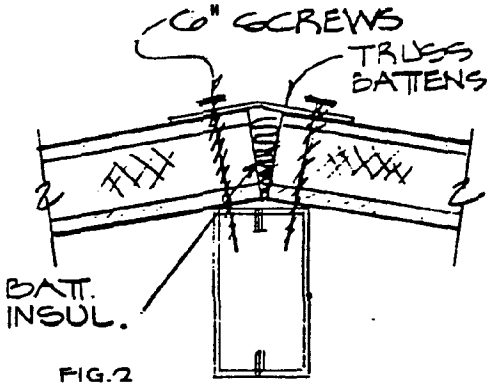

FIG. 2

STEP 5 - ROOF PANELS

FASTEN TRUSS BATTENS IN PLACE AS SHOWN. (SEE FIG. 2) SECURE TO STEEL MEMBERS WITH #14 X 6" LONG SCREWS.

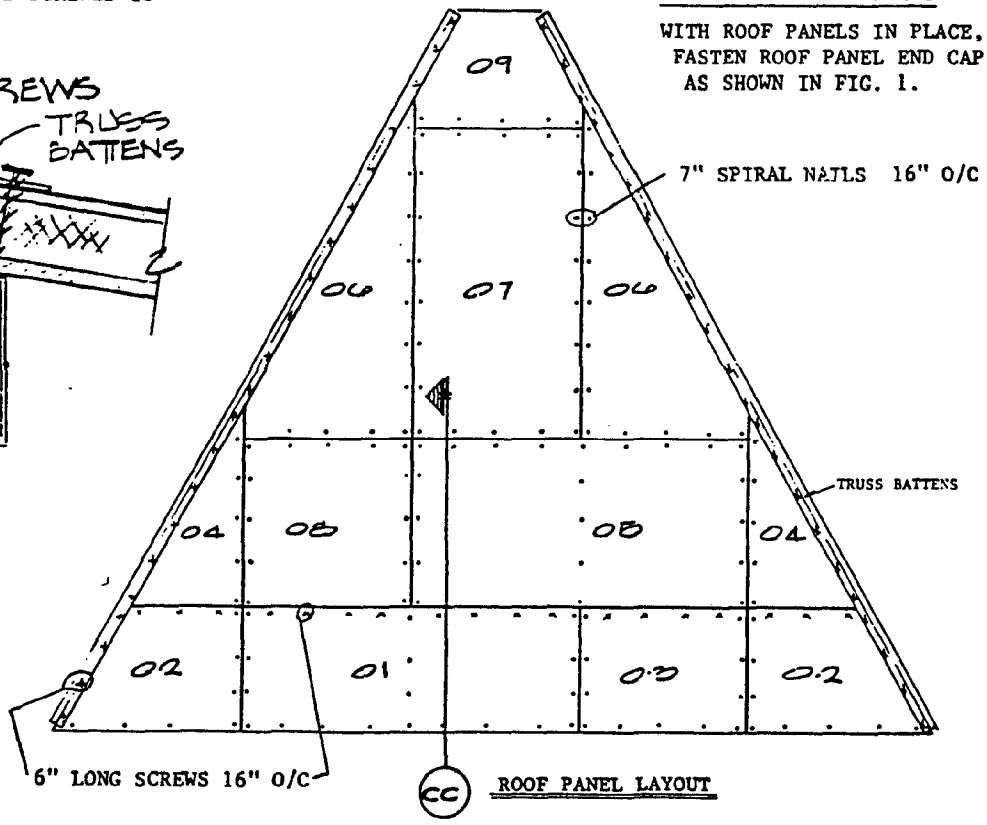

ROOF PANEL LAYOUT

STEP 7 - ROOF PANELS

NAIL REDWOOD FASCIA IN PLACE AS SHOWN IN FIG. 3.

USE ARDOX NAILS

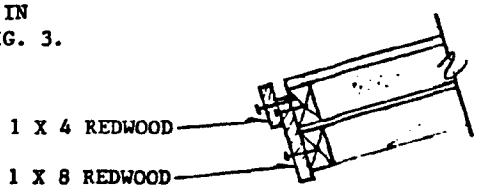

FIG. 3

NOTE: COMPOUND ANGLE ON FASCIA BOARDS HAVE BEEN SHOP CUT. EXACT LENGTH WILL HAVE TO BE FIELD CUT.

ROOFING INSTALLATION INSTRUCTIONS

STEP 1

COVER THE ENTIRE ROOF SURFACE WITH 15 LB. ROOF FELT, APPLIED IN A HALF LAP MANNER. USE ONLY ENOUGH NAILS TO HOLD IN PLACE WHILE SHINGLING SINCE NAILING SHINGLES OVER FELT WILL SECURE THE ENTIRE SURFACE.

STEP 2

FASTEN METAL DRIP EDGE AS SHOWN.

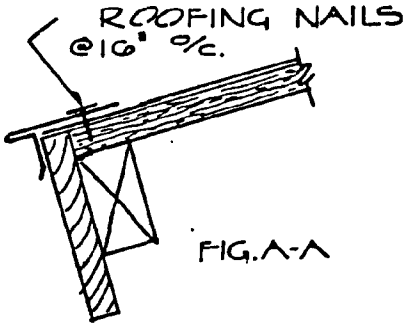

FIG. A-A

STEP 3

APPLY A "STARTER ROW" OF SHINGLES BY PLACING THEM TABS UP AND NAILING SECURELY.

STEP 4

CONTINUE APPLICATION OF SHINGLES ACCORDING TO MANUFACTURERS INSTRUCTIONS. STAGGERING ALL JOINTS - COVERING ALL NAILS, ETC. (MAX. 5" EXPOSURE)

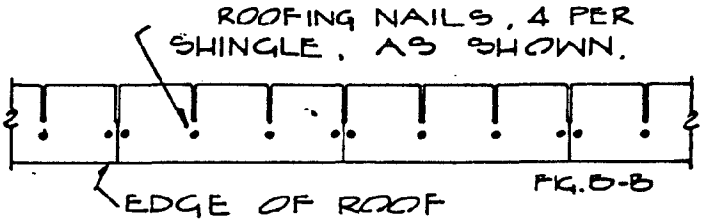

FIG. B-B

STEP 5

FINISH SHINGLING OFF BY CUTTING SHINGLES INTO INDIVIDUAL TABS AND NAIL "CAP" SHINGLES AT ALL "HIPS".

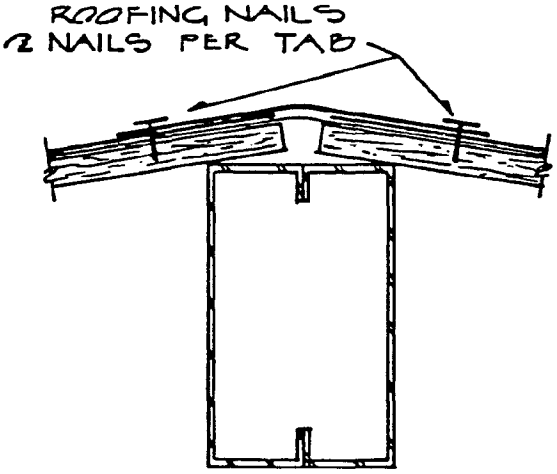

FIG C-C

ROOF CAP INSTALLATION ENCLOSURES INSTRUCTION

INSTALL SKYLIGHT AND SKYLIGHT FRAME OVER SHINGLED ROOF WITH #14 X 1" SHEET METAL SCREWS ACCORDING TO DETAIL.

DRILL 1/4" DIA. HOLE IN POLICARBONATE.

DRILL 3/16" DIA. HOLE IN TOP OF SKYLIGHT FRAME.

SET SKYLIGHT ON BUTYL TAPE AND CAULK JOINT WITH SILICONE GLAZING.

FASTEN POLICARBONATE TO FRAME WITH #14 X 1 SCREWS. 3 SCREWS PER SIDE, TOTAL OF 18 SCREWS.

SPREAD A HEAVY BEAD OF BUTYL CAULK AROUND OPENING. POSITION SKYLIGHT FRAME AND SCREW TO ROOF PANELS.

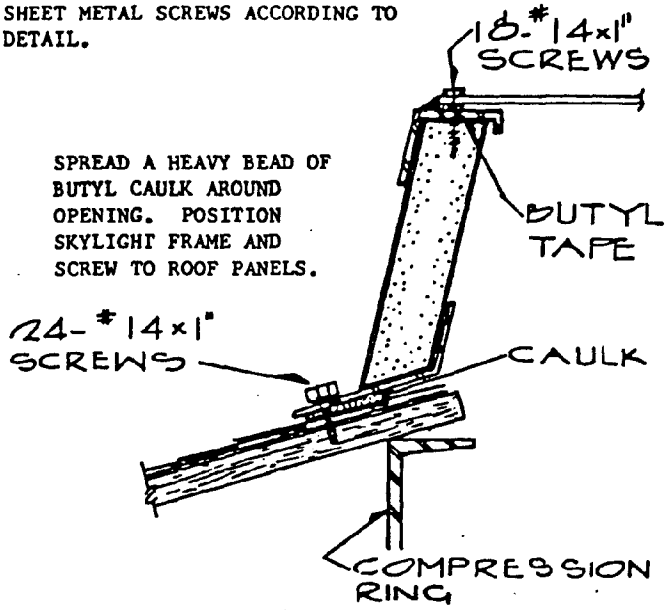

WHEN INSULATED GLASS IS USED, SET SKYLIGHT ON BUTYL TAPE AND CAULK JOINT WITH SILICONE GLAZING.

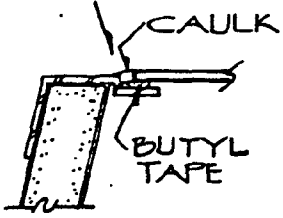

SKYLIGHT

FASTEN BASE ANGLE TO CUPOLA WITH #14 X 1" SCREWS.

SHINGLE ROOF OF CUPOLA ACCORDING TO ROOFING INSTRUCTIONS.

SPREAD A HEAVY BEAD OF CAULK AROUND OPENING. POSITION CUPOLA AROUND OPENING AND FASTEN WITH #14 X 1" SCREWS.

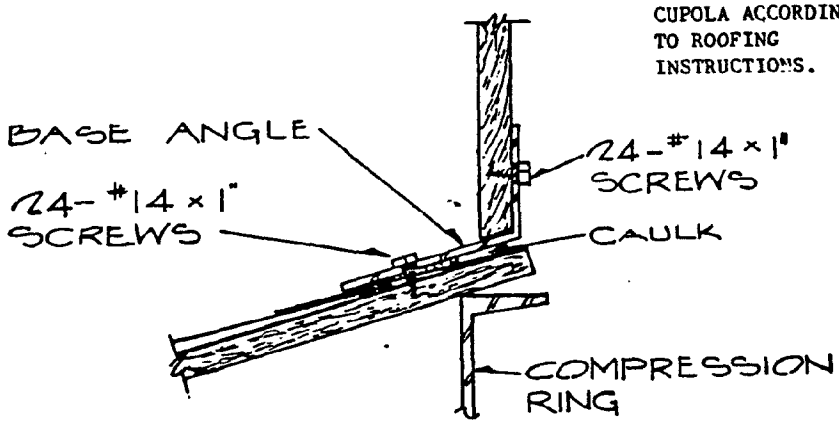

CUPOLA

SHINGLE ROOF CAP ACCORDING TO ROOFING INSTRUCTIONS. CUT A PIECE OF SHINGLE INTO A HEXAGON FOR CAP. NAIL WITH (6) 3/4" ROOFING NAILS.

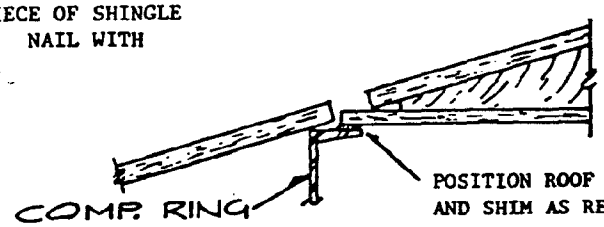

POSITION ROOF CAP ON COMPRESSION RING AND SHIM AS REQUIRED.

STANDARD ROOF CAP

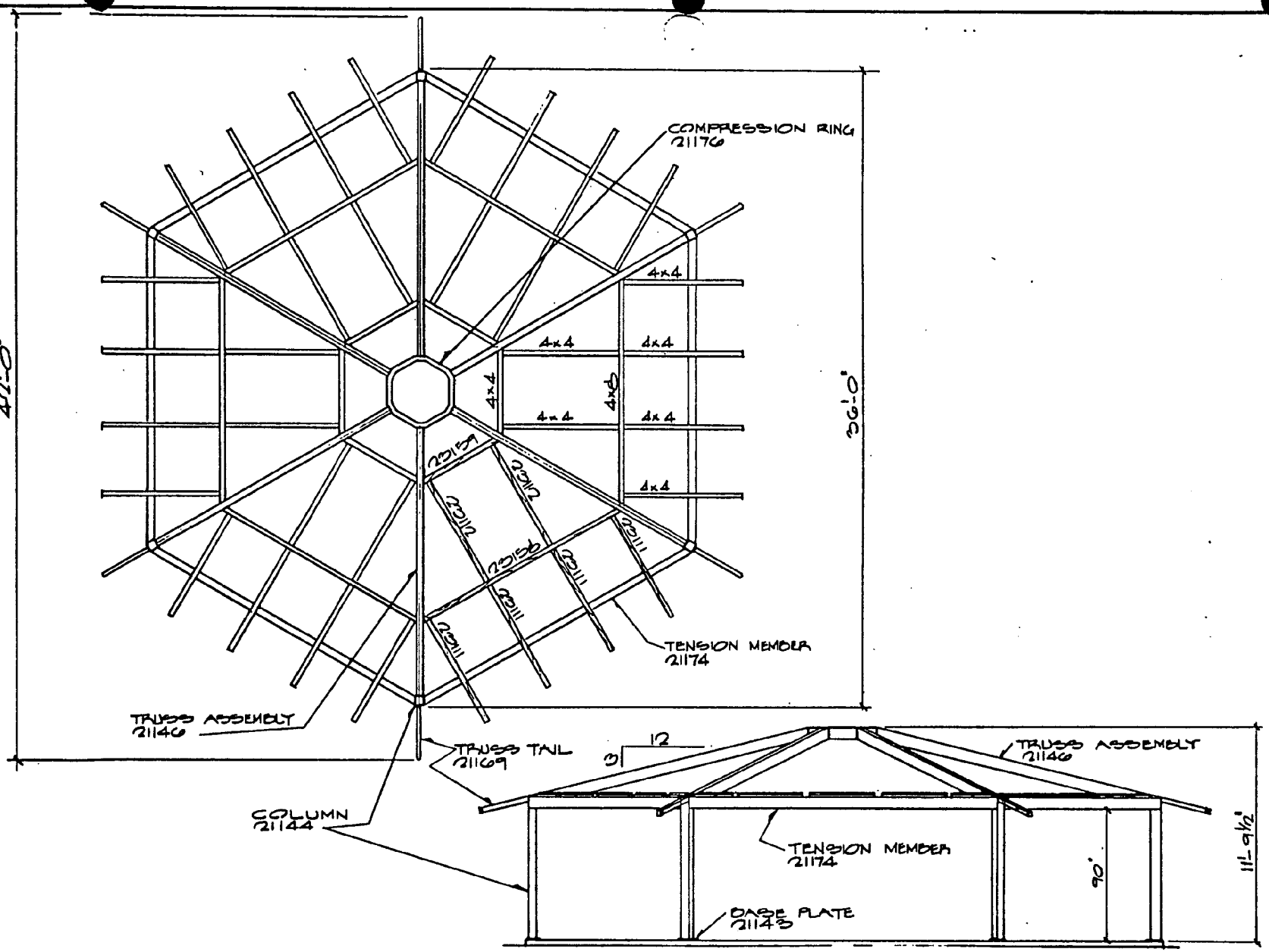

© COPYRIGHT
PATENT PENDING

NO.	DATE	REVISION DESCRIPTION	BY	CK'D

W. H. PORTER, INC. — HOLLAND, MICHIGAN

TITLE: FRAME ASSEMBLY | DRAWN BY: BRFI | SCALE: 1/4"=1'-0" | DATE: 5.21.80

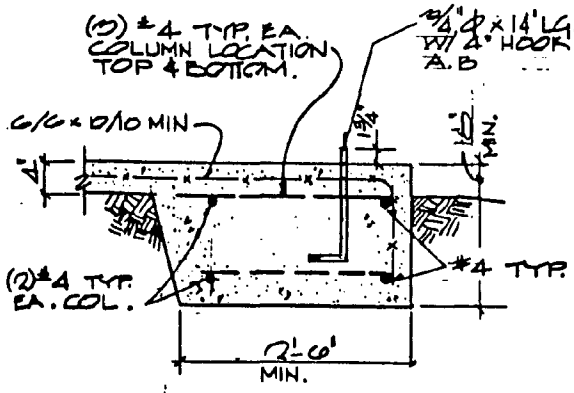

(B)
sc. 1"=1'-0"

NOTE
CHECK WITH LOCAL BUILDING CODES & OFFICIALS FOR SOIL PRESSURE & DEPT REQUIREMENTS

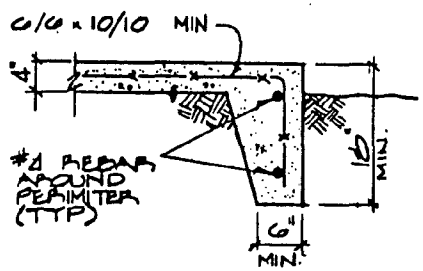

(A)
sc. 1"=1'-0"

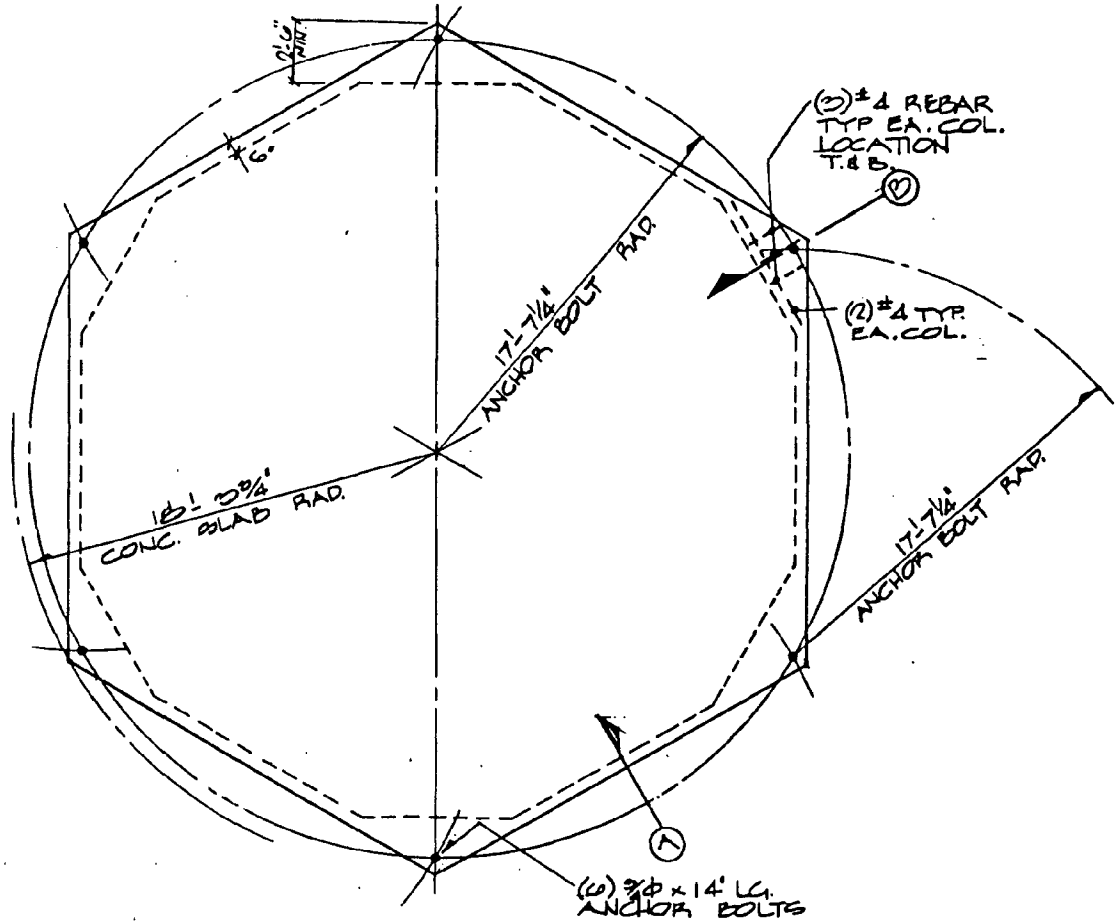

COLUMN LOADS

VERT. COMPRESSION	8.5 KIPS PER COL.
VERT TENSION (UPLIFT)	6.0 KIPS PER COL.
HORIZONTA THRUST	2.5 KIPS PER COL.

© COPYRIGHT
PATENT PENDING

NO.	DATE	REVISION DESCRIPTION	BY	CK'D	W. H. PORTER, INC.		HOLLAND, MICHIGAN
					TITLE: ANCHOR BOLT LAYOUT	DRAWN BY: BRIEL	SCALE: 1/4"=1'-0" / DATE: 4-9-79

2J-5 PAINTING:

Surface	No. Coats	Type of Finish
Ferrous Metal - Exterior	1 2	MAB Rust-O-Lastic Anti-corrosive Primer MAB Rust-O-Lastic Finish Enamel
Ferrous Metal - Interior	1 2	MAB Rust-O-Lastic Anti-corrosive Primer MAB Rich-Lux Low Luster Alkyd Enamel
Woodwork - Interior (paint)	1 1	MAB Rich-Lux Wall Primer Sealer MAB Rich-Lux Low Luster Alkyd Enamel
Woodwork - Interior (natural)	1 2	MAB Minit Dry Sanding Sealer MAB Rich-Lux Urethane Wood Finish
Concrete Block	1 2	MAB Block Filler MAB Epoxy Enamel (one part)
Concrete Floors in Toilet Rooms	2	MAB Epoxy Floor & Deck Finish

Note: All finish colors shall be selected by the Owner's Representative.

An allowance of Two Hundred Dollars ($200.00) should be provided for painting of graphics on the toilet room doors.

2J-6 HOLLOW METAL DOORS AND FRAMES:

Toilet room doors shall be flush Ceco or equal 18 guage hollow metal with 18 guage frame. Hardware shall be as follows for each door:

Hinges - 1½ pr U.S. 26 D-finish ball bearing
Push - 16" x 4" .050 aluminum
Pull - 16" x 3½" .050 aluminum
Kick plate - 8" high .050 aluminum 2" less than door width
Deadlock - U.S. 26 D Schlage or equal - master keyed
Closer - Rixon painted closer
Wall bumpers - dome type brushed aluminum

Storage room door shall be flush Ceco or equal 18 guage hollow metal with 18 guage frame. Hardware shall be as follows:

Hinges - 1½ pr U.S. 26 D-finish
Lockset - U.S. 26 D Schlage or equal - master keyed

2J-7 TOILET ACCESSORIES: Contractor shall furnish and install the following Bobrick or equal toilet room accessories in each toilet room:

Toilet Paper Dispenser - B-274 2-roll capacity
Towel Dispenser & Disposal - B-3944 Semi-recessed
Tilting Mirrors - B-293
Grab Bars - B-616 (provide anchoring in accordance with manufacturer's recommendations)
Soap Dispenser - B-116
Sanitary Napkin Dispenser and Disposal (Girls toilet room only) - B-35074 Semi-recessed

2J-8 PLUMBING:

1. Water Supply System: Contractor shall supply, install and hook-up all necessary equipment to supply water to the Park Shelter, as per plan, including one (1) 20 equivalent gal. "X-trol" type tank with all necessary piping and controls. All piping from the tank to the toilet rooms and other fixtures shall be included in the base contract.

2. Water Fountain: Wall mounted with chrome bowl and valve assembly haus or equal.

3. Water Heater: Jackson - Model No. MH-020 single element 20 gal. residential quality with a 3 kw heater and a five (5) year warranty.

4. Hose Bibb: Anti-freeze type Josam Series 1410, or equivalent.

5. Sanitary Sewer: Extend a new four inch (4") cast iron sanitary sewer to the manhole shown on the drawings. Schedule 40 P.V.C. may be used as a substitute for cast iron if permitted by the Township. Provide clean-outs, as required.

6. Insulation: All cold water piping shall be insulated with Armaflex or approved equal.

7. Floor Drains: Josam series 300 with polished nickel strainer.

8. Fixtures:

   a. Water Closet P-1 - American Standard 2222.016 "Madera" vitreous china, syphon jet action, elongated bowl, one and one-half inch (1 1/2") top spud wall hung. Sloan No. 112 YVQ Royal flush valve with vacuum breaker, one inch (1") screw driver angle stop, flush connection, with cast brass set screw escutcheon. Olsonite No. 10 CC white plastic seat elongated rim, extended back, open front less cover with concealed check hinge. Josam chair carriers. Mount water closet twenty inches (20") above floor for handicapped use.

b. Lavatory P-4 - American Standard 0194.076 Roxalyn twenty inches by eighteen inches (20" x 18") vitreous china lavatory, front overflow, anti-splash rim, cast-in soap dish, a-ranged for concealed support. 2248.037 supply fitting and pop-up drain, 2248.011 supply with loose key stop. 4420.14 one and one-quarter inch (1 1/4") adjustable P trap, cast body, cleanout plug, slip inlet, chrome plated brass nipple to wall and cast brass set screw escutcheons. Josam chair carrier with concealed arms.

2J-9 ELECTRICAL:

1. Service: Extend necessary underground service cable from existing maintenance building to a new 100 A lo G.E. or equal panel located in the storage room. Provide all necessary breakers.

2. Power Distribution: All exposed wiring shall be in conduit.

3. Waterproof Outlets: Furnish andinstall two (2) W.P. outlets where shown on plan. Connect to ground fault breaker in panel.

4. Fixtures: Furnish and install the following in each toilet room:

   a. One inch by four inch (1" x 4") two (2) lamp surface mounted fixture with wrap-around lens. Sim-Kar or equivalent.

   b. Broan Model #4-9 160 CFM thru-wall exhaust fan with integral damper. Provide interconnection to light and switch.

5. Miscellaneous Connections: Provide power wiring with necessary breakers and disconnects to the following:

   a. Water heater

NOAA COASTAL SERVICES CENTER LIBRARY
3 6668 14101 1538