Y 4
C73/7
En 2

1041

96th Congress
1st Session

COMMITTEE PRINT

DOCUMENTS

GOVERNMENT

Storage

OCT 8 1980

FARRELL LIBRARY
KANSAS STATE UNIVERSITY

ENERGY FROM OPEN OCEAN KELP FARMS

PREPARED AT THE REQUEST OF

HON. HOWARD W. CANNON, *Chairman*

COMMITTEE ON COMMERCE,
SCIENCE, AND TRANSPORTATION

AND

Chairman

NATIONAL OCEAN POLICY STUDY
UNITED STATES SENATE

KSU LIBRARIES
A11900 954037

SEPTEMBER 1980

Printed for the use of the
Committee on Commerce, Science, and Transportation

U.S. GOVERNMENT PRINTING OFFICE

51-285 O

WASHINGTON : 1980

AUTHENTICATED
U.S. GOVERNMENT
INFORMATION
GPO

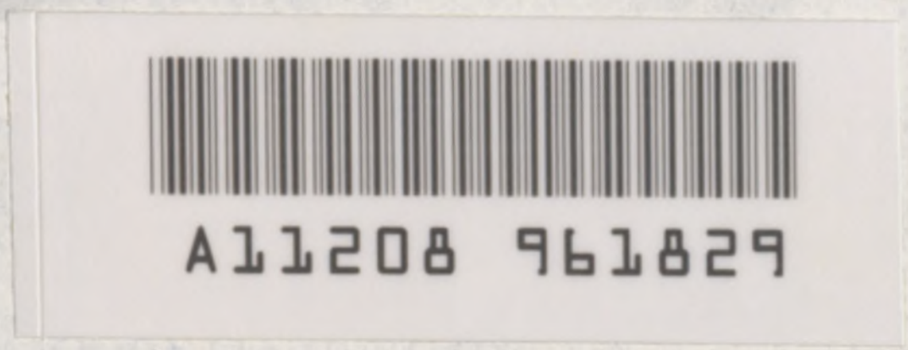
A11208 961829

COMMITTEE ON COMMERCE, SCIENCE, AND TRANSPORTATION

HOWARD W. CANNON, Nevada, *Chairman*

WARREN G. MAGNUSON, Washington
RUSSELL B. LONG, Louisiana
ERNEST F. HOLLINGS, South Carolina
DANIEL K. INOUYE, Hawaii
ADLAI E. STEVENSON, Illinois
WENDELL H. FORD, Kentucky
DONALD W. RIEGLE, JR., Michigan
J. JAMES EXON, Nebraska
HOWELL HEFLIN, Alabama

BOB PACKWOOD, Oregon
BARRY GOLDWATER, Arizona
HARRISON H. SCHMITT, New Mexico
JOHN C. DANFORTH, Missouri
NANCY LANDON KASSEBAUM, Kansas
LARRY PRESSLER, South Dakota
JOHN W. WARNER, Virginia

AUBREY L. SARVIS, *Staff Director and Chief Counsel*
EDWIN K. HALL, *General Counsel*
WILLIAM M. DIEFENDERFER, *Minority Staff Director*

NATIONAL OCEAN POLICY STUDY

HOWARD W. CANNON, Nevada, *Chairman*

WARREN G. MAGNUSON, Washington
ERNEST F. HOLLINGS, South Carolina
RUSSELL B. LONG, Louisiana
DANIEL K. INOUYE, Hawaii

BOB PACKWOOD, Oregon
HARRISON H. SCHMITT, New Mexico
JOHN W. WARNER, Virginia

EX-OFFICIO MEMBERS

APPROPRIATIONS

LAWTON CHILES, Florida — LOWELL P. WEICKER, Connecticut

ENERGY AND NATURAL RESOURCES

SPARK M. MATSUNAGA, Hawaii — TED STEVENS, Alaska

ENVIRONMENT AND PUBLIC WORKS

JOHN H. CHAFEE, Rhode Island — MIKE GRAVEL, Alaska

FOREIGN RELATIONS

CLAIBORNE PELL, Rhode Island — JACOB K. JAVITS, New York

GOVERNMENT AFFAIRS

ABRAHAM RIBICOFF, Connecticut — WILLIAM V. ROTH, JR., Delaware

LABOR AND HUMAN RESOURCES

HARRISON A. WILLIAMS, JR., New Jersey — RICHARD S. SCHWEIKER, Pennsylvania

ARMED SERVICES

JOHN C. STENNIS, Mississippi — JOHN TOWER, Texas

AT LARGE MEMBERS

LLOYD BENTSEN, Texas
J. BENNETT JOHNSTON, Louisiana

CHARLES McC. MATHIAS, JR., Maryland
S. I. HAYAKAWA, California

JAMES S. W. DREWRY, *NOPS Chief Counsel*
DEBORAH J. STIRLING, *NOPS Counsel*
GERALD J. KOVACH, *NOPS Minority Staff Counsel*

LETTER OF TRANSMITTAL

U.S. SENATE,
COMMITTEE ON COMMERCE,
SCIENCE, AND TRANSPORTATION,
September 4, 1980.

DEAR COLLEAGUE: Large ocean energy farms may one day prove to be an alternative source of synthetic natural gas for homes and businesses. Research into new ocean biomass energy systems has been reviewed by the Office of Technology Assessment at the request of the Committee on Commerce, Science, and Transportation, and the National Ocean Policy Study. This report presents the status of ocean energy farm developments and evaluates their potential.

While ocean energy farms are now in the early stages of development and much research remains to be done, the prospects are encouraging. It is hoped that this report will provide useful information and promote a better understanding of the issues affecting Federal support for research into new energy resources from the ocean.

Sincerely,

HOWARD W. CANNON, *Chairman.*

LETTER OF SUBMITTAL

CONGRESS OF THE UNITED STATES,
OFFICE OF TECHNOLOGY ASSESSMENT,
Washington, D.C., December 28, 1979.

Hon. HOWARD W. CANNON,
Chairman, National Ocean Policy Study,
U.S. Senate,
Washington, D.C.

DEAR MR. CHAIRMAN: Thank you for your letter of December 17 requesting information on ocean biomass potential that can be drawn from our overall study which is underway (Energy from Biological Processes). I enclose a technical memorandum entitled "Energy from Open Ocean Kelp Farms." This report was prepared by the OTA Oceans Program staff with the assistance of specialists in the research and development aspects of ocean farming. It was also reviewed by a group of individuals from universities, industry and related fields and by OTA's Biomass Advisory Panel. Because this report is only one part of our overall assessment of biomass energy potential it has not yet been reviewed by the Technology Assessment Board. I expect that review to occur in the context of the overall study which we plan to complete early next year.

This memorandum contains descriptive and analytic material concerning ocean biomass resources; potential for future ocean farms; technologies of ocean farming; existing government and private efforts; energy and economic data; environmental effects and legal aspects; and future research needs. The analyses indicate that, while kelp and other seaweeds are potentially a highly productive source of biomass for fuels, the technology for cultivating large open ocean areas is in the early stages of development. A carefully planned, long range research program will be necessary if the present uncertainties in such areas as sustained productivity, reliability of the technology and economics are to be resolved.

I hope this information will be useful to your committee. Please let me know if we can be of further assistance.

Sincerely,

JOHN H. GIBBONS.

PREFACE

"Energy From Open Ocean Kelp Farms" was prepared by the OTA Oceans Program staff with principal investigations and analyses undertaken by Neushul Mariculture Inc. of Goleta, Calif., and the Baham Corp. of Columbia, Md.

Additional assistance was provided by the General Electric Co., Wheeler North of the California Institute of Technology, and Robert Wildman of the National Oceanic and Atmospheric Administration.

A draft of this report was reviewed by the following persons:

Edward Ashare, Dynatech R/D Co.
John R. Benemann, University of California.
Betty S. Davis, University of California.
William H. Ehorn, National Park Service.
Rimmon C. Fay, Pacific Bio-Marine Labs.
Ab Flowers, Gas Research Institute.
Joel C. Goldman, Woods Hole Oceanographic Institution.
Edward N. Hall, Chromalloy Ocean Resources.
Robert W. Krauss, Oregon State University.
Arthur C. Mathieson, University of New Hampshire.
Iain C. Neish, FMC Corp.
William J. Oswald, University of California.
Oswald A. Roels, University of Texas.
J. Robert Waaland, University of Washington.

OTA staff responsible for performance of this assessment were Peter Johnson, Nancy Ikeda and Bill Giese under the overall direction of Robert Niblock, Oceans Program Manager.

CONTENTS

	Page
Introduction	1
Summary of findings	5
Giant kelp: Description and uses	9
Macrocystis pyrifera	10
Methane generation from *Macrocystis pyrifera*	16
Resources and availability	19
World seaweed resources	19
Productivity of kelp and other plants	21
Kelp genetics and seed-stock production	24
Estimating kelp farm productivities	25
Plant growth rates	27
Productivity estimates	27
Factors affecting kelp productivity	28
Nutrients	30
Effects of plant fertilization	31
Artificial upwelling	32
Marine farm designs	35
Marine farming and hydrodynamics	35
Siting considerations for ocean farms	36
The Sargasso Sea as a model for a substrate-less farm	37
Platforms and artificial substrate	38
Platform and substrate mooring lines and buoys	43
Pumps	44
Distribution, dispersion, and upwelling systems	47
Harvesting techniques	50
Gas Research Institute (GRI) marine biomass program	53
History	54
Present and future	55
Budget	60
Energy and economics	63
Energy projections from kelp farms	63
Net energy and economics	64
Net energy balance	64
Environmental impacts of natural and open ocean kelp farms	69
Wave and weather changes	69
Pollution	69
Fish, bird, and plant populations	70
Fish production around an open ocean sea farm	71
Future conflicts with competing ocean users	72
Legal and regulatory aspects of natural and open ocean kelp farms	73
California State regulations concerning kelp harvesting	73
Open ocean kelp farms	74
Licensing of kelp farms	75
Current seaweed research and future research needs	77
Macrocystis research	77
Research needs	78
Research efforts on other marine algae	79

51-285 O - 80 - 2

INTRODUCTION

This report describes problems and opportunities associated with developing future ocean farms which would use one type of seaweed, giant kelp, as a future biomass source of energy. Kelp is presented here as the best example of a source of future ocean-based biomass. Other seaweeds or algae have been proposed and present somewhat similar problems, and can be claimed also to have benefits. By examining the possibilities of kelp and also noting other proposals, OTA hopes to illustrate the status of this technology in general, its future potential, the problems involved, and the Federal role in this segment of alternative energy research.

Seaweed is harvested around the world. About 2 million wet metric tons are now cut annually, and estimates are that the total potential worldwide crop is 9 times this much—about 18 million wet metric tons.[1] (See ch. IV.)

In recent decades, seaweed cultivation has rapidly become more successful and has substantially added to annual world harvest figures. For example, as of 1970 there were 52,000 hectares (130,000 acres) of sea surface under cultivation in Japan, about 10,000 hectares (25,000 acres) in the People's Republic of China, and additional acreage in Taiwan, Korea, the Philippines, and elsewhere.

None of the current world harvest is used for U.S. energy production, which is the subject of this report.

In the United States where wild seaweed beds have been harvested for many years, we are beginning to study the possibility of increasing production through ocean farm cultivation techniques. A small test farm has been installed along the California coast. (See ch. VI.)

Large ocean kelp farms could theoretically supply significant quantities of natural gas (methane). When linked to a methane production system, for example, and assuming serious technical problems are solved, a 400,000 hectare (1 million acre) kelp farm may produce enough gas to supply 1 percent of current U.S. gas needs. (See ch. VII.)

Of course, it would be no easy matter to farm such vast tracts of ocean, and much still needs to be learned about seaweed cultivation. But serious research is reducing our areas of ignorance, and seaweed may someday become a biomass producer.

Algae are among the simplest and most primitive of plants. Larger macroscopic algae are commonly referred to as seaweeds. Large seaweeds are the dominant plant in most shallow coastal waters, including those off California and Mexico, where they attach themselves to submerged rocks or some other hard substrate under water.

The seaweeds apparently most adaptable to human cultivation are the red and brown algae. People have eaten red algae varieties for thousands of years, expecially in countries such as Japan and China.

---

[1] Unless otherwise noted, this report will present weights in metric tons, which are the equivalent of 2,204.2 lbs.

The brown algae group includes the giant kelp *Macrocystis* (fig. 1), already harvested in the United States from wild and semicultivated beds, and considered at present to be the best candidate for intensive cultivation off California. This report will concentrate on kelp, especially *Macrocystis*, as a possible fuel producer. (See ch. III.)

FIGURE 1.—*Macrocystis pyrifera*. (A: 1/64 natural size; B: 1/4 natural size.) The giant kelp is shown in the left part of the plate in a natural pose with the long leafy stipes rising to the sea surface from the massive holdfast. On the right is one of the leaflike fronds showing the gas-filled float bladder at its base and the distinctive teeth along the margin.



Source: KELCO, Inc.

Macrocystis can grow as much as 2 feet a day under optimal conditions, forming natural beds up to 3 miles wide and several miles long. It is practically the only constituent of kelp beds in southern California. (See ch. III.) This kelp is now put to a variety of uses, principally

in the food processing industry. Fuels have never been produced from kelp except in minute quantities as part of research testing.

Experts' projections of ocean farm energy potential and costs vary widely and are based on such very sparse data that they cannot be used to support or reject ocean farm proposals. Estimates by experts vary by factors of as much as 100. No concensus is possible without improved experimental data and more complete biological engineering tests; however, the following numbers approximate the middle of responsible optimistic and pessimistic projections for a 400,000 hectare (million acre) ocean kelp farm:

- Average productivity=40 dry, ash free (DAF) metric tons per hectare per year.
- Average annual energy produced=0.2 quads (1 percent of U.S. gas consumption of 20 quads per year).

Such a system, if built, would be the equivalent in energy supply of one large LNG importing plant such as that located at Cove Point, Md. Again, estimates vary widely, but methane produced from kelp is sure to be expensive.

Experiments are underway to find the best laboratory-reared seaweed culture to stock seaweed farms. Some researchers are looking to produce a pedigreed kelp bred specifically for high methane production, fast growth, and hardiness.

A key problem faced by potential ocean kelp farmers is to deliver enough nutrients to the plants to fertilize them. While deep water contains many necessary nutrients, surface water is often devoid of nourishment as a desert is devoid of water.

One fertilizing technique being tried is artificial upwelling of seawater, which involves pumping nutrient-rich, deep ocean water to the surface to benefit the kelp plants. (See ch. V.)

Current research on marine plants can be divided into two categories.

The first category, funded by several Federal agencies to a total of about $1 million a year, generally includes research projects aimed at a better understanding of marine plants, their cultivation, and potential new uses of the plants.

The other category is actually just one project: The marine biomass research program jointly funded by the Gas Research Institute and the Department of Energy which has funded over $9 million of directed research since 1974.

This ongoing marine biomass project includes a test farm off California. The farm began artificial upwelling experiments late in 1978, but was forced to suspend operations in early 1979 due to storm damage. This prototype is meant to provide biological information and research clues needed to operate much larger future farms.

It also aims at experimental work into cultivation of giant kelp on moored structures in the open ocean. The test farm, if its funding is continued and damage repaired, may lead to the actual operation of a full-scale ocean farm. (See ch. VI.)

There is considerable difficulty at this time in evaluating the appropriateness of the marine biomass research program because little has been produced. It is important that research results on the cultivation of kelp on ocean farms be reported in a comprehensive way and subjected to critical review if a future large program is to be justified.

SUMMARY OF FINDINGS

Kelp and other macroalgae are potentially a highly productive source of biomass for fuels. Estimates vary drastically of what may be possible for future large ocean farms, but OTA's evaluation of a hypothetical ocean kelp farm indicates productivities could range from a low value of 14 dry, ash-free (DAF) metric tons per hectare per year to a high value of 65.

OTA estimates that if about 400,000 hectares of ocean (1 million acres) were ever farmed, the gross energy production could amount to 0.2 quads. As noted in the introduction, this is equal to approximately 1 percent of current U.S. natural gas consumption. These production estimates, of course, should be treated with caution since there are no ocean kelp energy farms and nobody has ever harvested a commercial energy crop.

Actual gross energy production from such a huge hypothetical ocean kelp plantation has been projected by other researchers to range from 10 times OTA's estimate to only one-tenth that figure. Others caution that the entire project might simply prove impossible. Years of experiments will be necessary before any projections can be confirmed.

There is even less data to draw on in estimating net energy possibilities. In a report prepared for the Department of Energy (DOE) by the Dynatech Corp., net energy outputs were estimated to range anywhere from a net loss to about 70 percent of crop energy.

Much of the technology to construct present concepts of open ocean farms is already well known. Similar platforms, structures, and moorings have been built for the offshore oil industry and the existing seaweed industry uses mechanical harvesting techniques.

Less certain areas of ocean farm engineering at present include nutrient distribution, dispersion characteristics of upwelled water, and specific configuration of the artificial substrate to which kelp plants will be attached.

A major problem for cultivated kelp beds may be to supply an ocean farm with proper nutrients in correct quantities. The extreme difficulties of determining the delicate balance of nutrients found in a natural environment and reproducing this in a cultivated one are well known to researchers.

Test farms will upwell deep ocean water to supply kelp with proper nutrients. Reservations concerning this procedure are twofold among skeptics. They worry that deep water could become stagnant under the farms, or that, once upwelled, the water would too rapidly dilute or sink again.

This country's major ocean biomass project is jointly supported by the Gas Research Institute (GRI) and the DOE. The project may become the most heavily funded biomass program of the 1980's, with grants projected to grow to over $50 million yearly by 1983. Plans for this project have been developed mainly by the GRI, although regular DOE approval for phases of the project is mandatory.

GRI estimates imply that ocean kelp farming could be a commercially viable project for this country. The institute's fuel production cost estimates for methane generation from kelp range from $3 to $6 per million Btu's. (OPEC oil in mid-1979 was roughly equivalent to $2.50 per million Btu's.)

The previously mentioned Dynatech report on fuels from marine biomass comes to a different conclusion. Its estimates range from $7 per million Btu's up to several hundreds of dollars per million Btu's, should productivity prove low and design costs high.

Some critics of the GRI marine biomass program contend that there is not enough data available to justify the level of expenditures for the biological test farm.

Critics have stated that the open ocean test farm is an inappropriate and perhaps premature step in a long, logical process of developing future deep sea operations. Considerations which may be overlooked by the test farm approach include:

- The need for better information on kelp growth and productivity and limiting factors in natural beds.
- The need for additional basic research into nutrients and productivity. (Much research is also needed on plant diseases, grazing on plants, and water movement and quality.)
- The possibility of developing shallow water kelp farms either in areas of natural upwelling or in conjunction with other fertilizing techniques. (See ch. X.)
- A lack of hard data on net energy expectations.
- No plans are being readied at present as alternatives to fertilization by upwelling.

Since plans for future ocean biomass farms call for the use of millions of acres of ocean surface, there will be conflicts with other traditional users. The dedication of large areas of open ocean surface for a single commercial purpose such as this is unprecedented. It would require a complex, special regulation after review of current local, national, and international laws.

The ocean space within the 200-mile zone surrounding the United States is 1½ billion acres. About one-third of this acreage is off Alaska, and one-third off Hawaii and other islands. Conflicts can be expected with such traditional ocean users as commercial shipping, the Navy, commercial and sport fishing, offshore oil and gas operation, and recreational boating. To date, no detailed investigation of legal or institutional approaches to resolving conflicts has been done. This issue will need analysis prior to any large-scale initiative in ocean farming, and will have a major impact on feasibility, productivity, and cost of marine biomass in the future. Analyses of specific sites and siting problems will be the key to the ocean question.

Federal research programs directed toward energy problems have not been integrated into similar research directed toward production of food, chemicals, or other products, OTA has found.

Much research is needed to develop any suitable marine plant culture regardless of whether the end product is food or fuel. Such basic research could be better supported and coordinated by all interested agencies. Programs supported by Sea Grant and National Science Foundation have tended to focus on basic biological efforts or food production goals while DOE programs are focused on primary

fuel production. Since DOE now has the major funds available for seaweed research, the tendency has been to create programs focused on fuel production. The diversity of existing seaweed research efforts is essential to a long-term improvement in our knowledge and our capability of developing future marine plant culture programs.

One approach to conducting a systematic program for developing ocean farms would be to expand research in natural seaweed beds and shallow-water farms prior to experiments in deepwater, open ocean farms. This possibility would mean coordination of several existing research efforts; expanding some, developing some new ones and generally integrating many efforts focused on basic biological questions and food production as well as energy production.

51-285 O - 80 - 3

GIANT KELP: DESCRIPTION AND USES

The term kelp was first used in Scotland between about 1720 and 1830 to refer to seaweed ash. During the 19th century, Americans began using the word to describe certain brown seaweeds. Today, botanists use the word kelp when referring to the larger members of the brown algae order. Kelp has recently been considered for large ocean farm cultivation and major energy conversion projects.

Kelps all have holdfasts, which are groups of tentacle-like branches which resemble the roots of a land plant and are used as an anchor. A stipe or stem extends from the holdfast to the surface. It terminates in the pneumatocysts, or floats; gas-filled organs with thick walls. These floats act to keep the plant buoyant. Fronds or leaves extend from the pneumatocysts. Most plant growth occurs at the end of the stipe near the water surface. The holdfast of a mature kelp plant may support hundreds of stipes in all stages of growth. Holdfasts may vary from less than 0.3 meter (1 ft) to more than 2 meters (6 ft) in diameter. The size of the holdfast varies with the age of the plant, the rate of growth, the natural rate of turnover in the bed, and the location of the plant. Larger holdfasts are generally found along the mainland in protected locations. Smaller holdfasts are found offshore in more exposed locations.

Energy is taken from sunlight and combined with carbon dioxide, water, and absorbed mineral nutrients from the ocean to synthesize plant tissue. The brown skin which covers the entire surface of the fronds absorbs sunlight and is the primary area of photosynthesis and nutrient absorption. While all of the plant tissue has the capacity for photosynthesis, the bulk of the plant—stipes and holdfast—is shaded below the compensation point and is fed by translocation of nutrients. Growth rates for *Macrocystis* may be as high as 2 feet a day. Growth varies directly with the availability of such factors as nutrients and sunlight. Growth in weight has been measured at about 3 percent per day.[1]

A need for commercial, domestic sources of potash salts 60 years ago first led the U.S. Department of Agriculture to consider seaweeds and rockweeds as a potential resource. Three giant kelp species growing off the Pacific Coast were identified as potential commercial potash sources. They were picked because unlike many other varieties, they grew in fairly large, accessible beds.[2]

Kelp beds are found near shorelines or in natural inlets all along the Pacific coastline from northern Baja, California to the southern coast of Alaska. Large beds of *Macrocystis* grow along the lower California coast. Further north, *Macrocystis* and *Nereocystis luetkeana* grow in intermingled patches. Still further north along the coast of Alaska, *Nereocystis* and *Alaria fistulosa* grow together.

---

[1] See Plant growth rates, p. 27.

[2] Cameron, Frank, 1912. Fertilizer investigations—Potash. U.S. Department of Agriculture. Peport

While several red algae and other brown algae varieties such as *Laminaria* are already economically important in the Orient, it is the previously mentioned three giant kelps which have been the focus of past U.S. research efforts at production of biomass for energy, chemicals or food. The giant kelps have proven themselves adaptable to U.S. coastal waters and are already being harvested on a limited basis.

Of the three giant kelps, *Nereocystis* and *Alaria* are found in large natural beds around the Alaskan coastline but are not now harvested in major quantities. These may be useful varieties for future biomass experiments, but California varieties have been investigated more extensively because the region is not as remote as Alaska. Alaska coastal waters have been further qualified as a brutal, demanding, and hazardous area in which to work. There would be enormous energy demands associated with operations in this region and thus a very high economic breakeven point. Limited light may also be a factor in shortening the growing season.

Macrocystis Pyrifera

Macrocystis (figs. 2, 3, and 4) is the largest known marine plant. The largest plant ever actually measured and recorded on the North American Pacific coast was approximately 43 meters (140 ft) long. *Macrocystis* will be discussed in more detail than the other two giant kelp varieties because it is being studied experimentally and is an obvious example of current mariculture technology. While it looks to be a likely candidate for U.S. ocean farming situation and as such is deserving of close attention, wild *Macrocystis* itself might not be used on such a farm. A kelp farm may develop a hybrid more exactly suited to the individual needs and requirements of each operation. As stated, though, the characteristics of *Macrocystis* appear to be more in keeping with what might be needed for a kelp biomass production operation in U.S. Pacific waters. *Macrocystis* is also of special interest because it alone of the three giant kelp discussed is a long-lived perennial plant.

It grows on rocky bottoms free from shifting sand. Many plants are found in depths as shallow as one-third meter (1 ft), but *Macrocystis* is generally not taken at depths shallower than 8 meters (25 ft) for reasons of navigational safety of the harvester vessel. The *Macrocystis* blade averages between 30 and 35 centimeters (12 and 14 inches) in length and 8–10 centimeters (3 to 4 inches) wide. *Macrocystis* grows from spores which develop on leaves of the parent plant deep below the surface.[3]

---

[3] Ibid.

FIGURE 2.—Diagram of an adult *Macrocystis* plant.

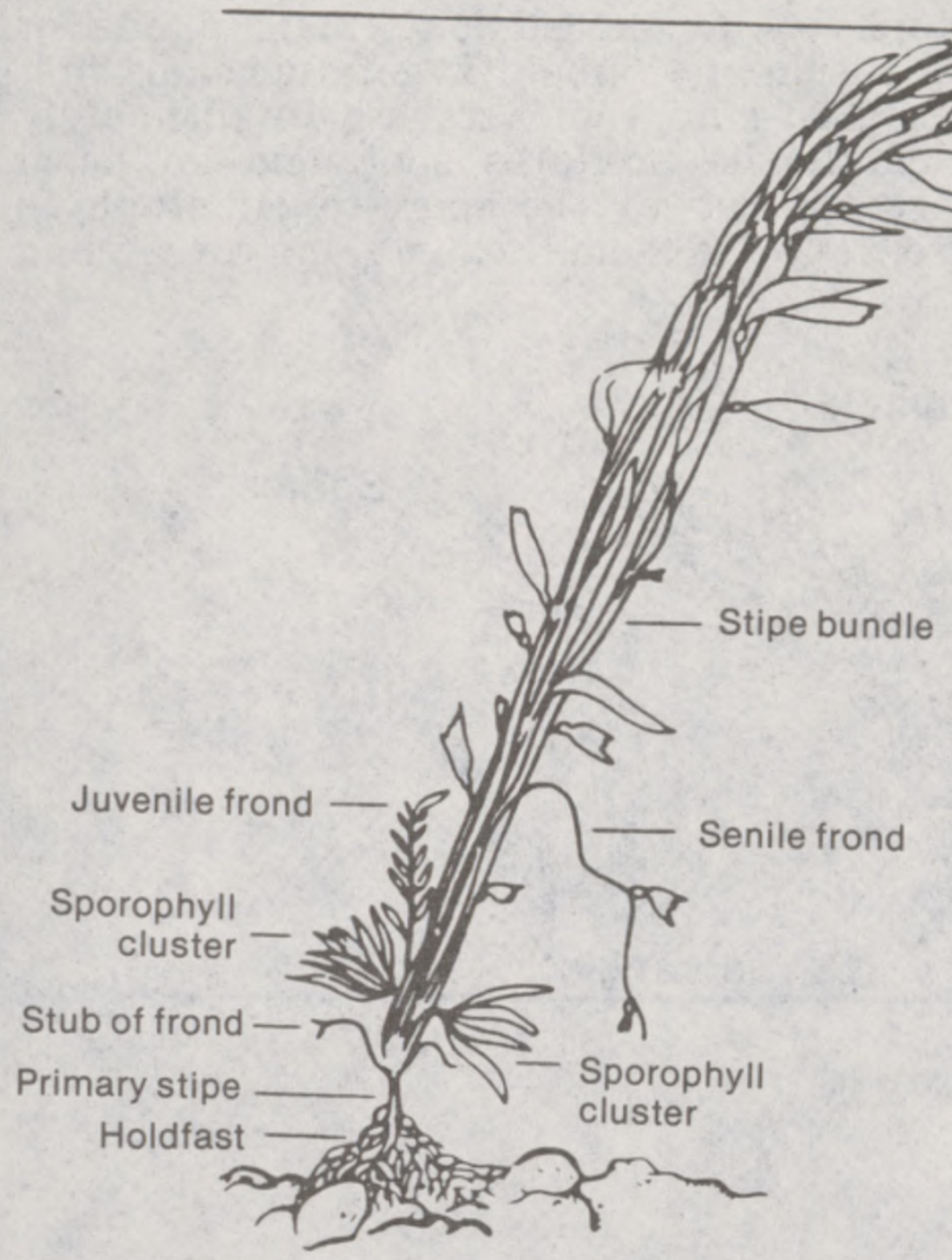

Source: GE Co.

FIGURE 3.—The relationship between the microscopic and macroscopic stages in the life history of *Macrocystis* and the water motion rates in the habitats of these stages

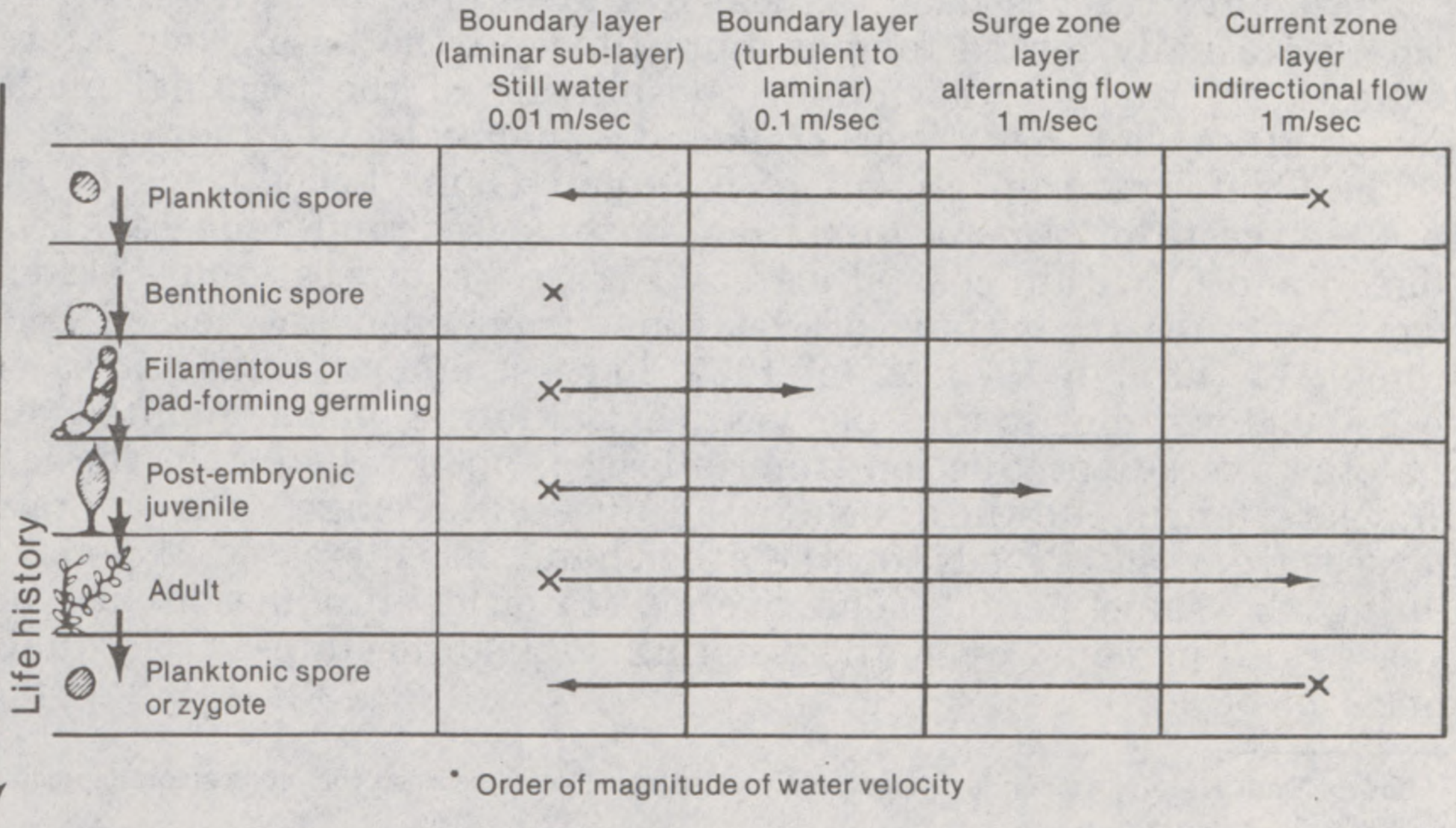

FIGURE 4.—The life history of *Macrocystis*, diagramed in a linear way from left to right. The haploid spore goes through a dumbbell stage to form either multicellular male or female gametophytes or unicellular female plants or few-cellular male plants. After sexual fusion the diploid zygote develops first into an embryonic sporophyte, then post-embryonic stages, to ultimately form a large sporophyte, which when fertile produces sporangia on basal sporophylls. The life history can be controlled at the spore-to-gametophyte phase, gametophyte-to-gamete phase, and to some extent in the young sporophyte phase

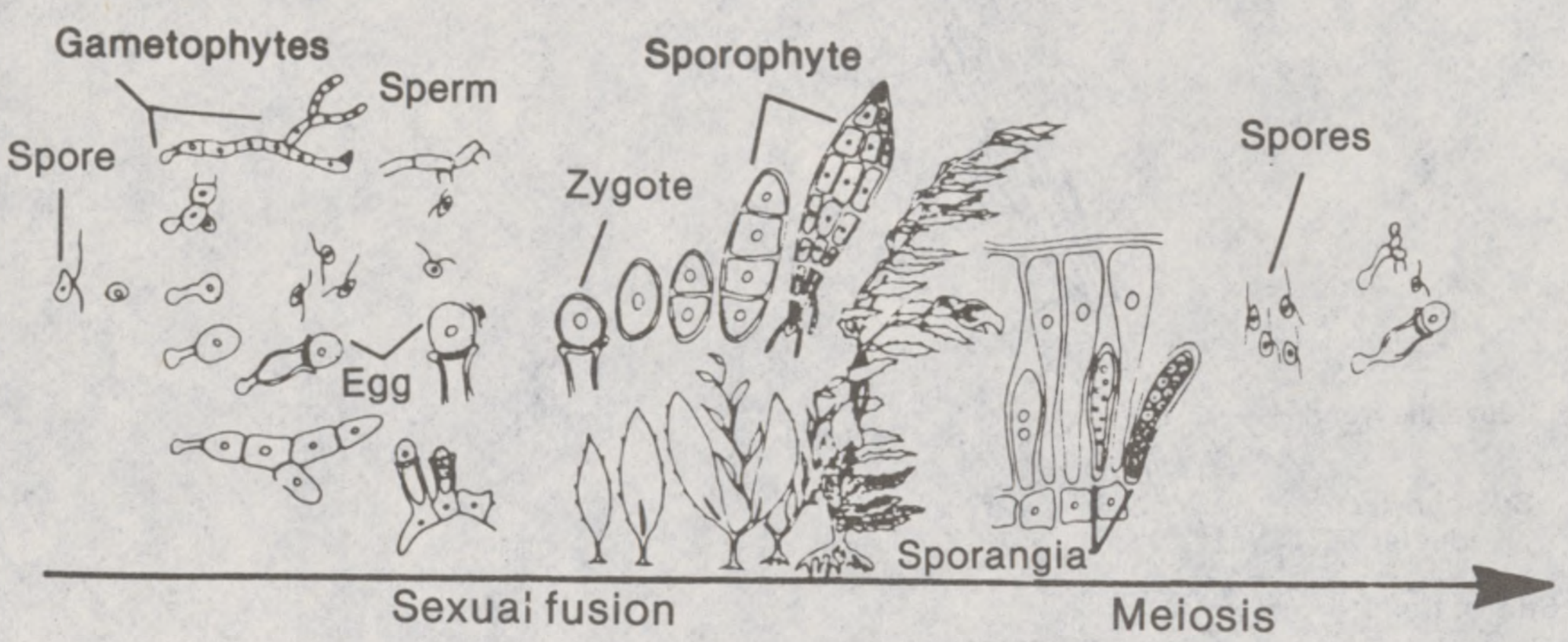

Source: M. Neushul

Macrocystis grows best in a continuous swell. Where conditions permit, it forms beds up to 5 kilometers (3 miles) wide and several kilometers long. In California, it is practically the only constituent of kelp beds from Cedros Island, Baja, in the south, to Point Conception. Further north the stand diminishes quickly.

The plant attaches itself to rocks by means of its large holdfast. Its stipe are usually forked four or more times at the base. New lateral blades are formed by asymmetrical splitting of the terminal blade. Each mature blade has a short stalk and a pneumatocyst or air bladder.

The California Department of Fish and Game keeps track of the total harvests of *Macrocystis* from both leased and unleased beds (figs. 5 and 6) within coastal waters. Figure 6 shows estimates of kelp harvest figures (thousands of wet tons) from open and leased beds from 1914 through 1970. As of 1977, harvest amounts had increased to 200,000 wet metric tons per year. A California official pointed out that the average production from unleased, open beds has in the last 15 years fallen one-third below the 30-year average. The average harvest from leased beds, on the other hand, has increased 21 percent during the same period. The overall statewide production has increased 12 percent over the existing 20,000 hectares (75 square miles) of beds.[4]

[4] Smith, Emil J., 1978, California Department of Fish and Game, personal communication, September 1978.

FIGURE 5.—The giant kelp beds of southern California.

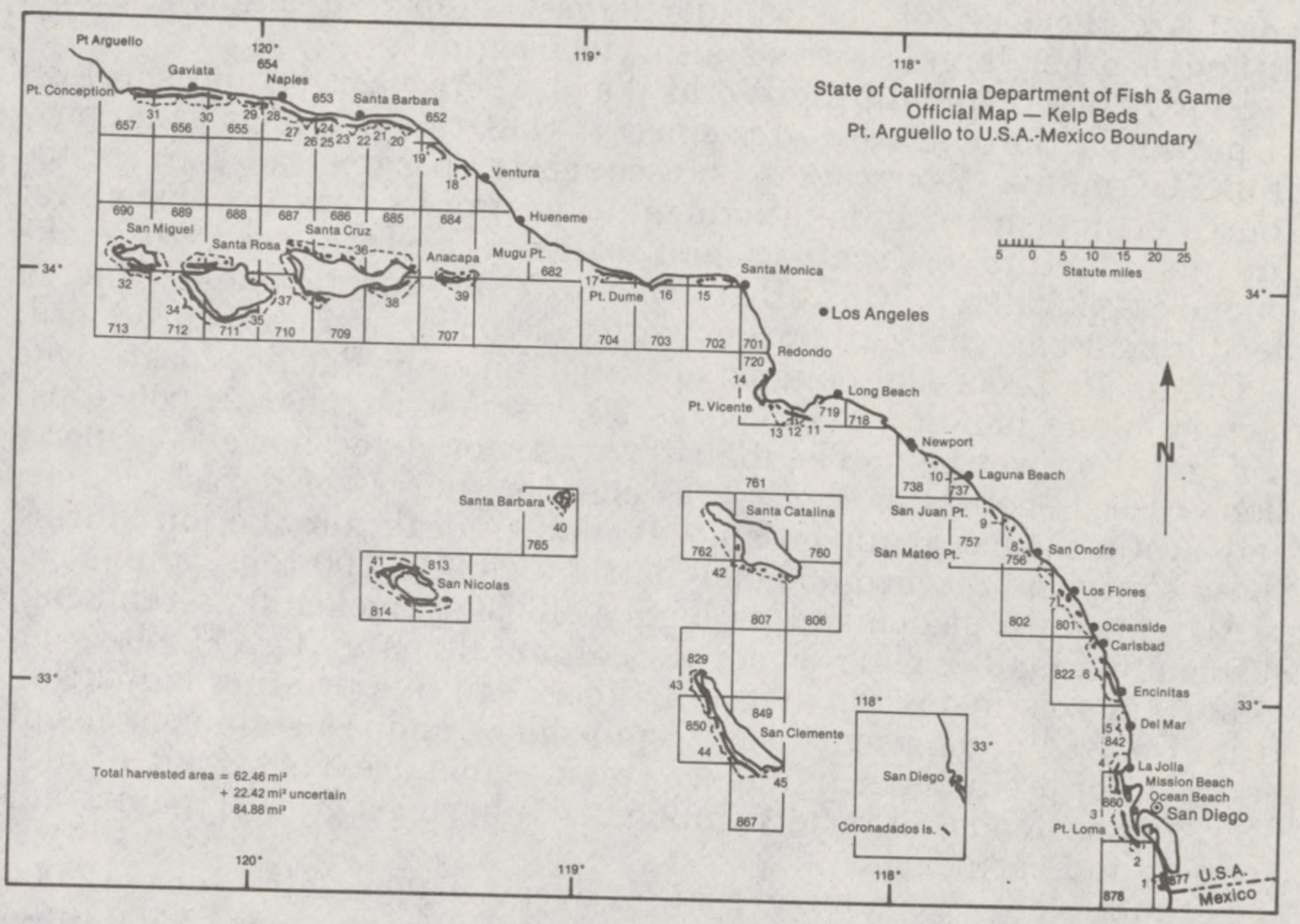

FIGURE 6.—*Macrocystis* harvests in California from 1900 to 1970. California kelp beds are either individually leased by specific harvesters or open to all. Amounts taken prior to 1920 were large, presumably because entire plants were cut rather than only the floating canopy as is done at present. Harvested amounts continue to increase and in 1977 are at about 200,000 tons per year.

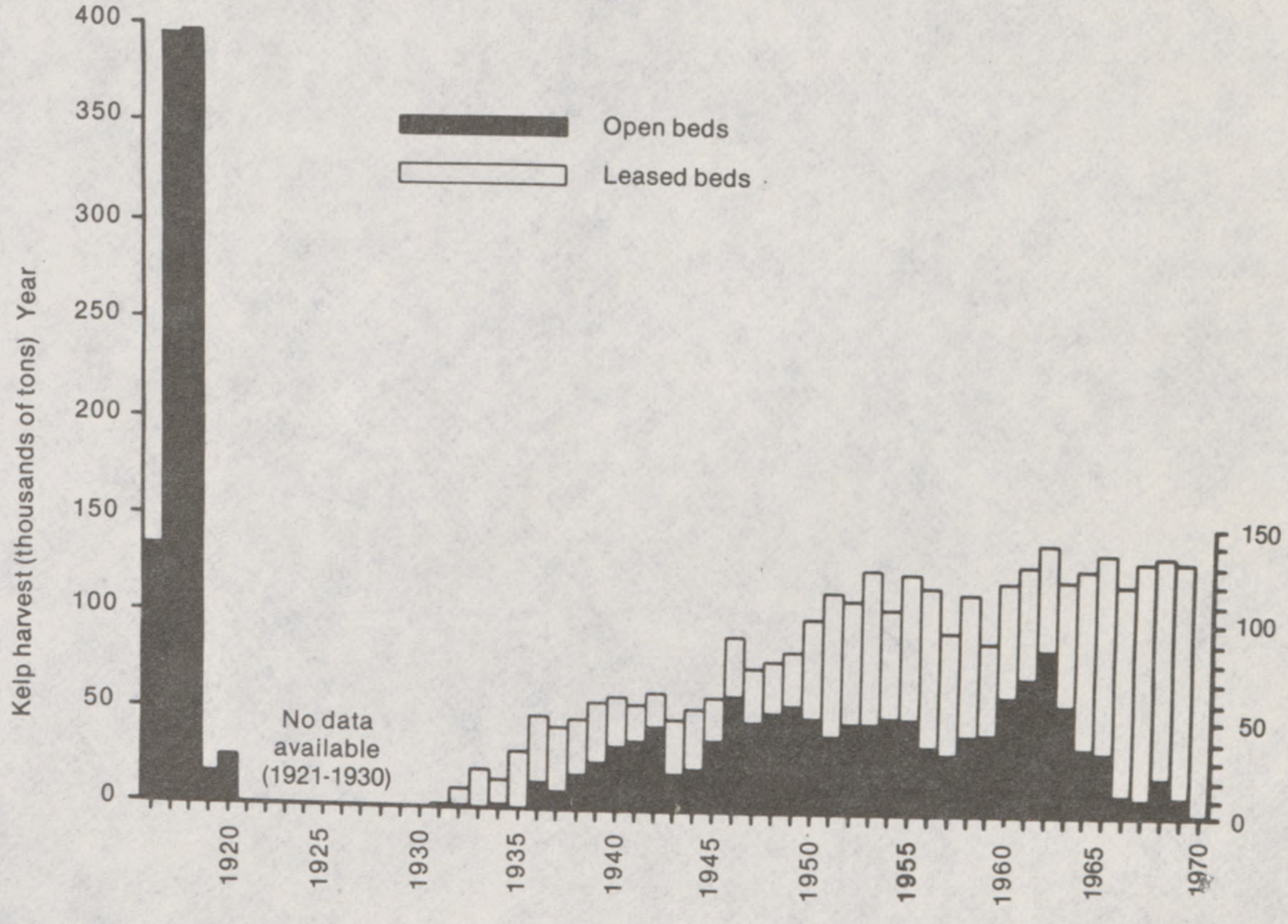

Source: M. Neushul

Macrocystis harvested from natural kelp beds on the California coast are the base of the world's largest supply of alginate gums, although other large seaweeds also yield alginates.

Shortly before and during World War I, there was a serious shortage of potash in the United States since at that time supplies came only from Germany. *Macrocystis* subsequently became a U.S. prime source of potash.[5] A unique fermentation process was developed for the manufacture of acetone and calcium acetate used to make smokeless powder. Two other chemical products, iodine and a deodorizing charcoal carbon known as Kelpchar were also produced.

Up to 10 processing plants operated on the Pacific coast. One factory alone handled as much as 20,000 metric tons (24,000 tons) per month of wet kelp. The industry was short lived however. Operations ceased soon after the war as cheaper sources of potash, iodine, and acetone once again became available. Peak production during those war years reached 350,000 metric tons (400,000 tons) annually.[6]

Alginates are in demand as highly efficient thickening, stablizing, suspending, and gelling agents. Sodium alginate (fig. 7) plays an important role in textile, synthetic fiber, and dye printing industries. It is also used in ointments, casts, emulsifiers, and is a stabilizing agent in dozens of products including ice cream, salad dressings, fruit drinks, beer, frozen foods, antacid compounds, pharmaceuticals, paint, adhesives, and car polish.

Estimates have been made that for every 10,000 metric tons (12,000 tons) of dry kelp processed for alginates, 2,000 metric tons (2,400 tons) of salts and byproducts could be obtained.[7]

---

[5] Cameron, *Potash*.
[6] Tseng, C. K., 1947. Seaweed resources of North America and their utilization. Economic Botany, p. 70.
[7] Ibid.

FIGURE 7.—Sodium alginate manufacturing process.

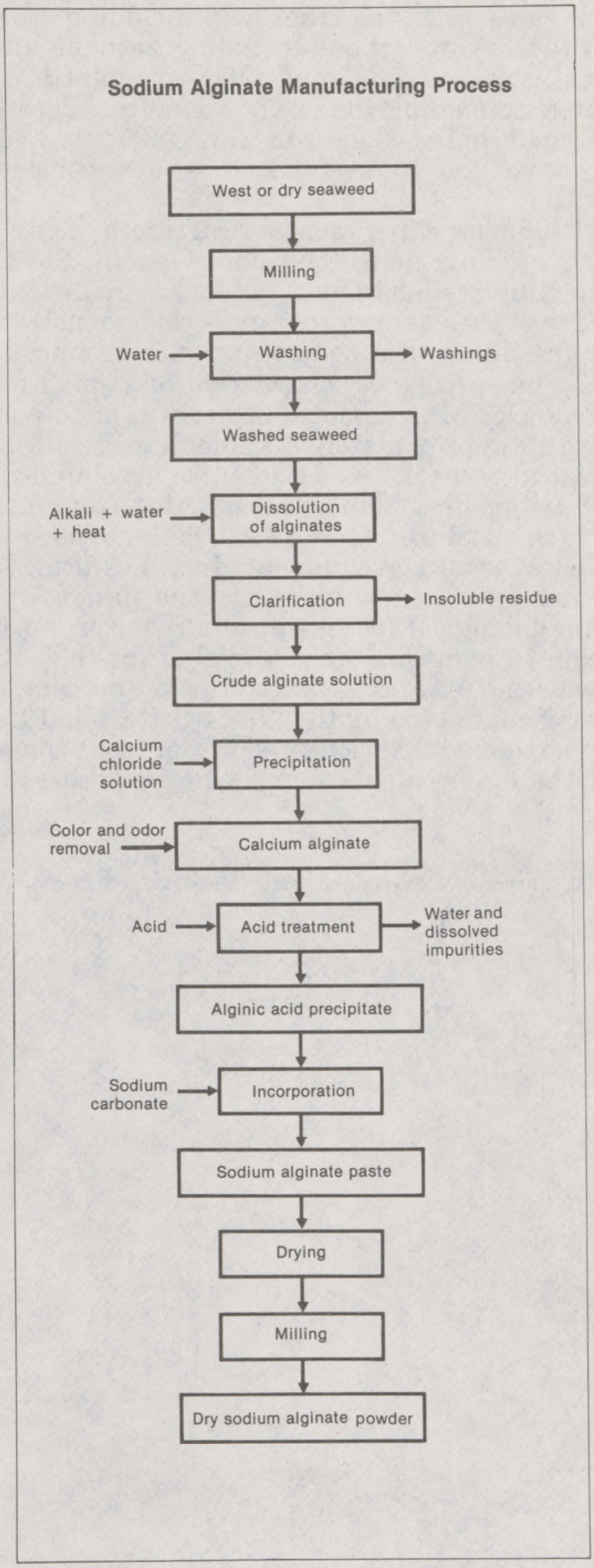

Source: KELCO Inc.

51-285 O - 80 - 4

Methane Generation From Macrocystis Pyrifera

Fuels which can be derived from kelp include methane gas (fig. 8) ethanol and other hydrocarbons including gasoline and fuel oil. The Gas Research Institute (GRI) and DOE are jointly working on production strategies including the use of anaerobic digestion and hydrogasification. Small batch digestion experiments have been accomplished and conversion to useful fuel is not considered a serious technical problem.[8]

The current biomass experimental program is being funded by the GRI and DOE's Solar Energy Division. General Electric's Re-Entry and Environmental Systems Division is managing the plant test. The overall objective of the energy program is to demonstrate the technical and economic feasibility of a commercial-size production system.

The first step has involved construction of a small test farm off the coast of Corona Del Mar, Calif. The farm is moored in 600 meters (2,000 ft) of water approximately 8 kilometers (5 mi) from shore. The so-called biological test farm is designed to accommodate at least 100 adult *Macrocystis pyrifera* plants transplanted from natural kelp beds near shore to the platform lines 18–24 meters (60–80 ft) below the surface.[9] Global Marine Development, Inc., has provided engineering construction and operation services for the design, fabrication, and operation of the biological test farm. Dr. Wheeler North, of Caltec is directing a team to plant and observe kelp growth.[10]

A parallel experimental program to develop necessary pretreatment processes is being conducted by the Western Regional Research Center of the U.S. Department of Agriculture. Major tasks completed included evaluation of the requirements for mechanical processing to increase digestibility.

---

[8] Cheng, Tien-Hsi. 1969. Exploitation of the sea. Economic Botany. 23:218.
[9] Flowers, Ab and A. J. Bryce. 1977. Energy from marine biomass. Sea Technology. October.
[10] Ibid.

FIGURE 8.—Methane fermentation of kelp.

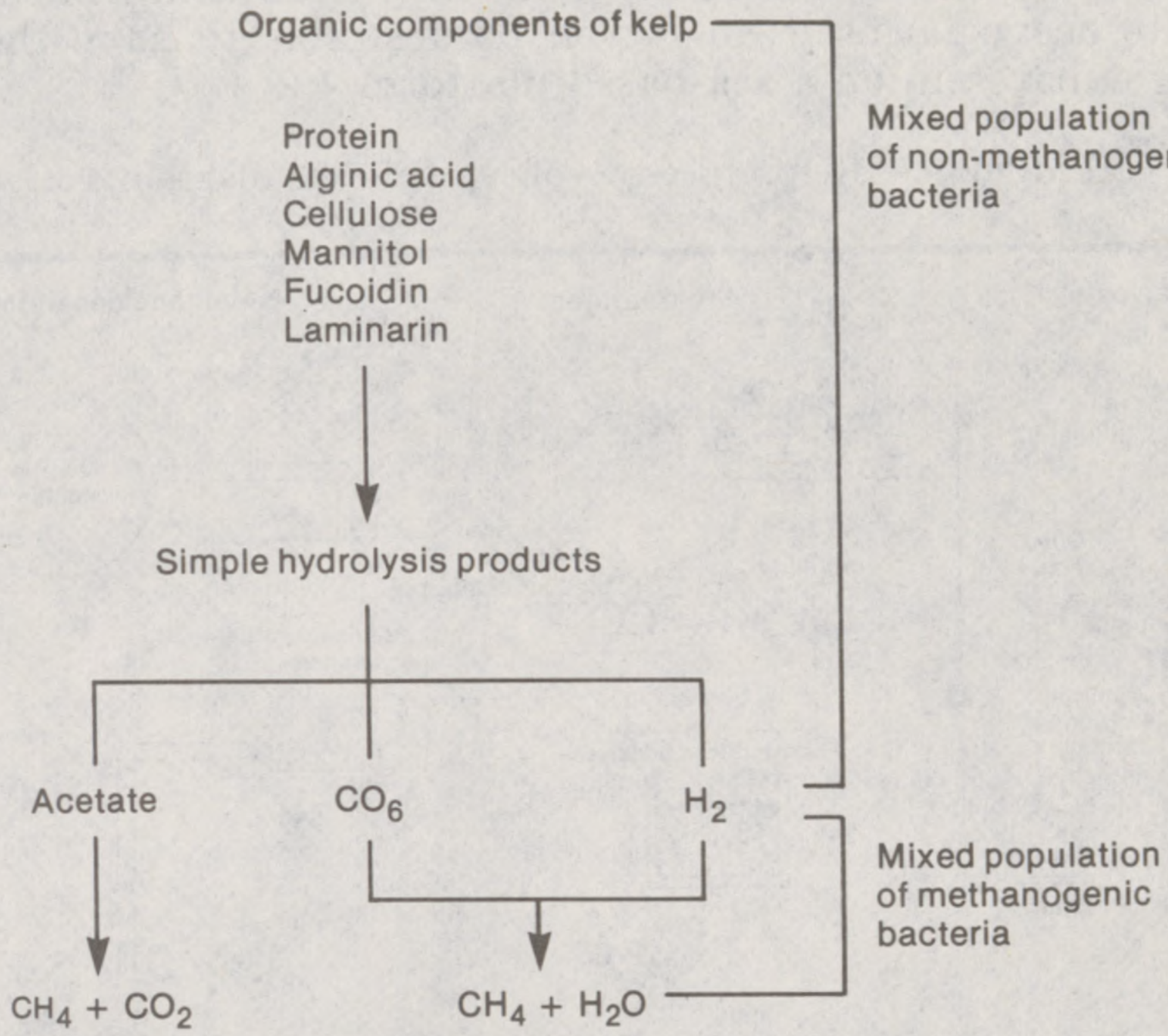

Source: GE Co.

A salt-tolerant mixture of anaerobic bacteria has been developed which yields over 70 percent of the theoretically attainable yield from volatile solids.[11] However, further energy is required to compress this gas to pipeline pressure to make it usable. That energy is not included in the 70 percent efficiency figure. Plans for processing the kelp may be studied and revised during the GRI's development program. Current thinking calls for a harvest to be prepared by passing it first through warm water to remove a surface coating, and then coarsely chopping the output. A weak solution of hydrochloric acid can be used to break down the cell structure to facilitate removal of water and salts.

The separation step would be used to segregate the electrolytes and carbohydrates. Solids and carbohydrates would next go through a hydrolysis process where polysaccharides, proteins, cellulose and bonded salts will be further broken down. The soluble sugars pressed out after hydrolysis could be fermented to yield ethanol and a yeast feed. The primary solids pressed out after hydrolysis would go into anaerobic digesters where methane gas could be produced. A sludge, high in nitrogen, also could result, and this could be used as a fertilizer. Alternatively, the primary solids would be used directly for animal feed or processed to yield other products.[12] (figs. 9, 10).

---

[11] General Electric Co. briefing. 1978. Energy from marine biomass project, program review, for the Gas Research Institute, Newport Beach, Calif., March 1978. p. 32.

[12] Stauffer Chemical Co., 1975. Personal communication. July 9.

It will be uneconomical to transport the wet kelp any great distance. Therefore, some dewatering of the algae may be accomplished at sea. For remote ocean farms it may even be desirable to have the whole processing subsystem on a sea-based platform.

FIGURE 9.—Kelp process—conceptual flow diagram.

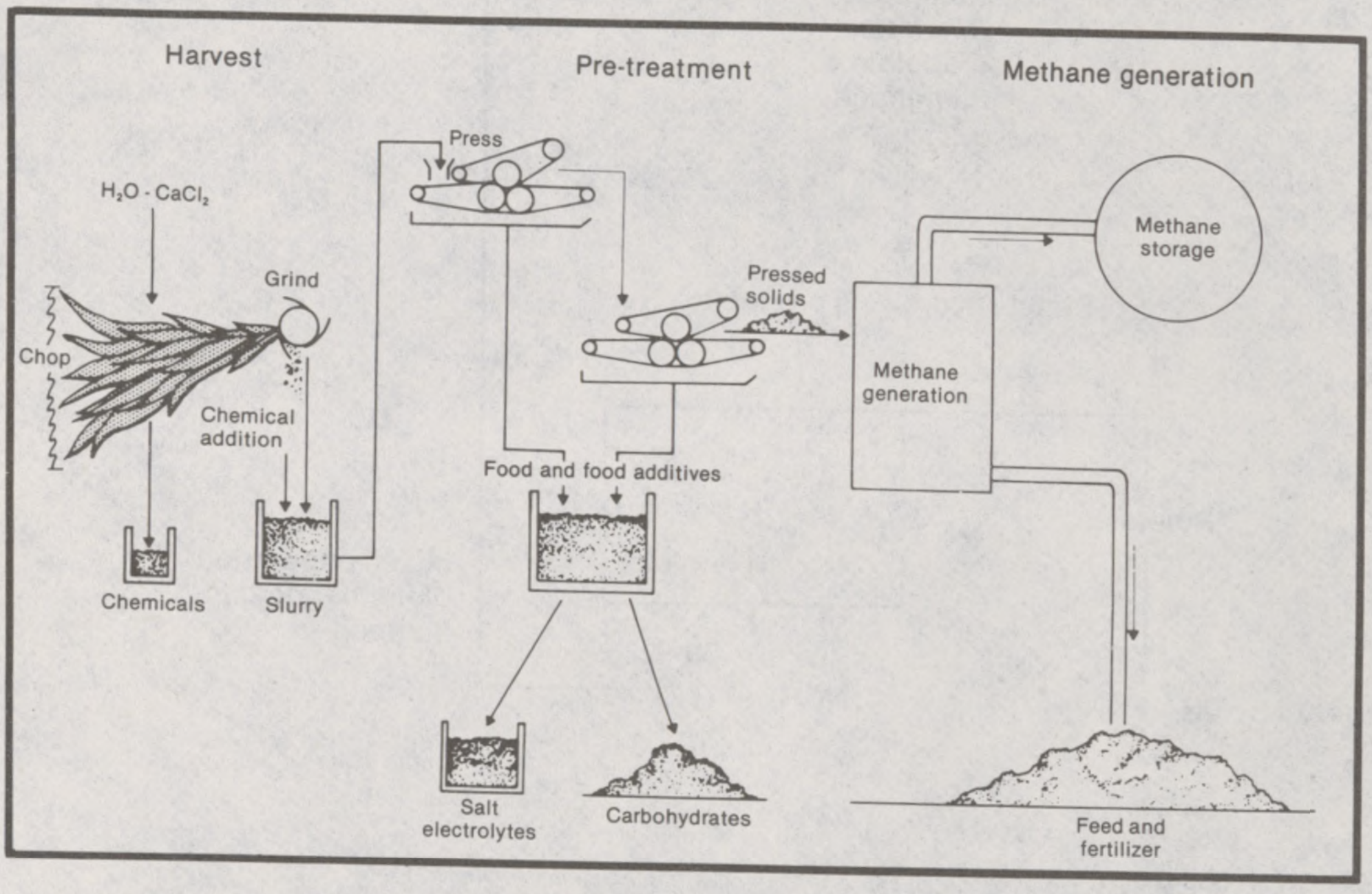

Source: GE Co.

FIGURE 10.—Kelp processing operation.

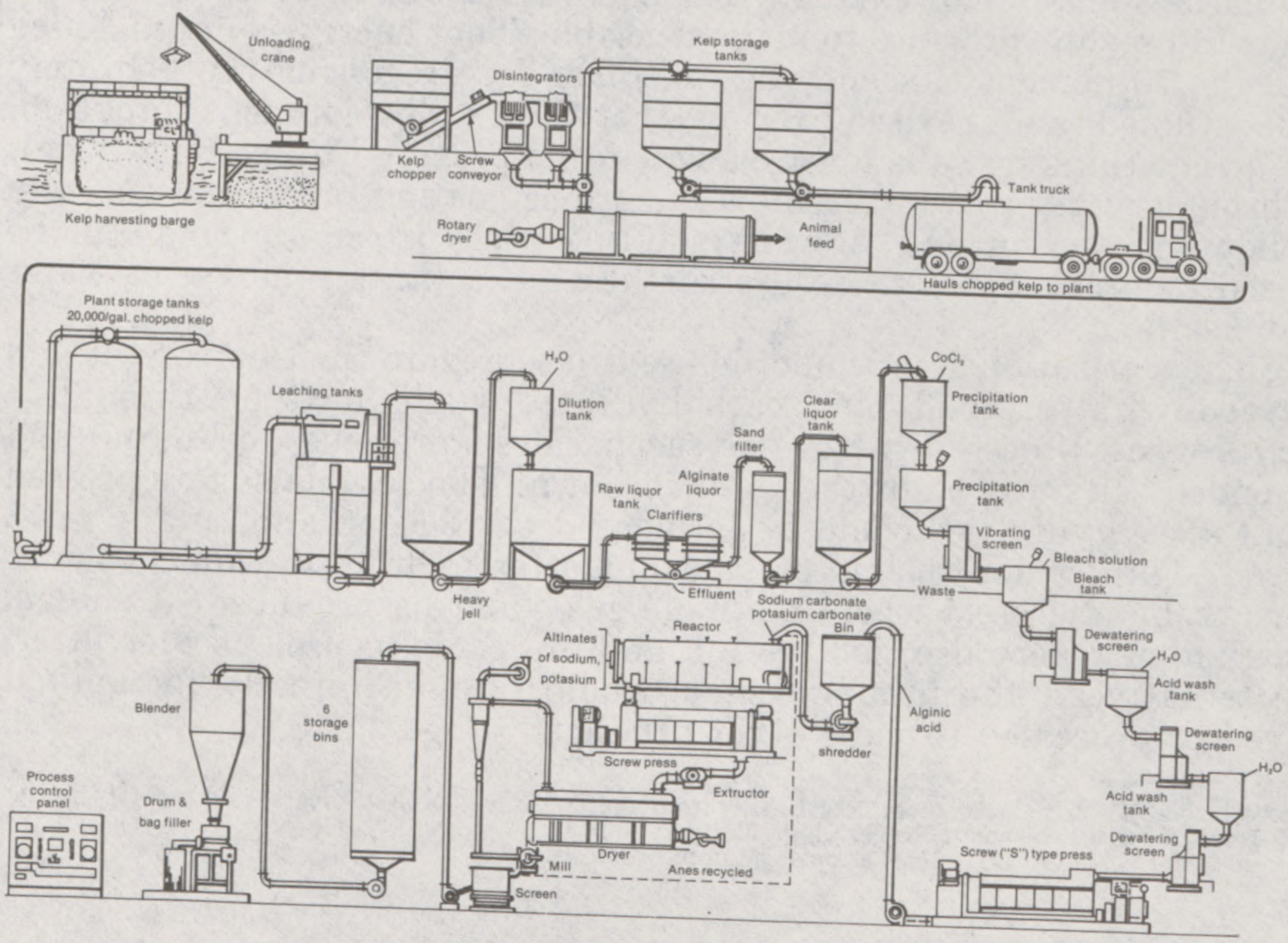

RESOURCES AND AVAILABILITY

Large-scale biomass production from ocean farms may be possible in the future if the many existing biological and engineering problems can be solved. New energy production could develop from what is now a food and chemical industry, or greatly expanded food production could result in conservation of some other energy resource. Many future paths are possible. Although chemical and food additive production from natural seaweed beds is common in many parts of the world, and successful ocean farming for food in protected coastal regions is now routine in such countries as Japan, Taiwan, The Peoples's Republic of China and Korea, yields in these regions do not yet justify energy crop production.

World Seaweed Resources

In 1975 the UN's Food and Agricultural Organization published "Seaweed Resources of the Ocean" which contains detailed data on seaweed harvests and potential.[1] These figures are something of a standard in the field.

However, the figures used should be treated with considerable care. They are believed to provide a reasonable guide to where the greatest potentials lie, and of the order of magnitude of the possible harvest only in the areas of the world which have been well surveyed. The difficulties of estimation are mainly due to the absence of any good estimates of potential harvest, even in those few areas where there has been extensive research or exploitation. The quantitative data are generally confined to figures of current harvest or of standing stock. There is little direct evidence as to how either of these are related to substainable annual harvest. Seaweeds grow continuously during most of the year and at the same time are decreased by grazing and erosion. Maximum growth, however, may be quite seasonal, especially in temperate latitudes, and can be further decreased by natural phenomenon such as warming trends.

---

[1] Michanek, G., 1975. Seaweed resources of the ocean. U.N. Food and Agriculture Organization, Rome.

The following table represents the existing seaweed harvests of both red and brown algae from those regions of the world where extensive production now exists. It must be noted that this production is used principally as direct human food (mostly in China and Japan), for chemicals and food additives (mostly United States and Europe) and for other feed or industrial products.

Actual seaweed harvests [1] *(red and brown seaweed)*

Area:	*Average annual harvests (1971–73) thousands of metric tons—wet weight*
Northwest Pacific (Japan, China, Korea)	1, 370
Northeast Atlantic (Northern Europe, Norway-Iceland)	280
East-Central Pacific (California-Mexico)	160
Southwest Atlantic (Argentina)	98
Mediterranean/Black Sea	51
All others	149
Total	2, 108

[1] Ibid.

The same UN report also projects a potential resource figure for worldwide production both from existing harvested seaweed beds and from large natural beds that are not harvested. The resulting total potential figures are summarized in the following table.

Worldwide potential seaweed harvest (red and brown seaweed)

Area:	*Thousands of metric tons—wet weight*
East-Central Pacific (U.S. West Coast and Mexico)	3, 550
North East Atlantic (Norway and Iceland, to Scotland)	2, 150
North west Pacific (China, Japan, Korea, to USSR)	2, 150
South west Atlantic (Argentina)	2, 100
South east Pacific (Chile)	1, 600
North east Pacific (Alaska)	1, 510
West Indian Ocean (mostly Kergeulen—a small island in Southern Indian Ocean)	1, 270
Sargasso Sea (Central Atlantic)	1, 000
Mediterranean/Black Sea	1, 050
East Indian Ocean	600
North west Atlantic (Nova Scotia)	600
All others	620
Total	18, 200

Of the above 18 million wet metric tons of worldwide seaweed harvest potential, almost 16 million tons would be from brown kelp—the variety that is most often proposed for conversion to fuels. The following world map (fig.11) locates those areas of major brown seaweed harvest potential and can be related to the previous table. Note, however, that many observers consider a nine-fold increase in algal production inconsistent and unrealistic. The data base for these estimates is not consistent worldwide, they contend.

FIGURE 11.—World kelp beds.



Source: KELCO Inc.

PRODUCTIVITY OF KELP AND OTHER PLANTS

To gage the potential of open sea mariculture for the production of biomass feed stocks or fuels, we must know whether or not such farms are feasible in the United States and what productivity can be expected. Certainly the existence of ocean farms in Asia (figs. 12, and 13) indicates that ocean farming is possible. However, the labor-intensive approach in these countries is not common in the United States, and U.S. open ocean farms are usually projected to be capital, rather than labor-intensive, ones. In addition, ocean farms will need to be economically competitive.

Ocean farming productivity potential can be compared with land biomass production to aid in value judgments. For example, a comparative analysis of productive ecosystems published in 1963 includes figures for aquatic plants, cultivated algae, forests, agricultural crops, and others. The range of productivity reported was from 1 to 75 dry metric tons (not ash free) per hectare per year with desert plants on the low end and tropical reed swamps on the high end. Seaweeds were in the midrange; higher than agriculture but lower than tropical rain forests.[2]

In 1963, when these comparisons were made, relatively little was known about marine macrophyte ecosystems, but our knowledge of such systems has since greatly increased.

One study of the productivity of St. Margaret's Bay in Nova Scotia found that 80 percent of the total biomass of seaweeds was *Laminaria* and *Agarum*, two brown kelps. Since these are subtidal and continuously submerged for the most part, they are very productive. Intertidal plants accounted for 10 percent of the total biomass in the bay.[3]

---

[2] Westlake, D. F., 1963. "Comparison of Plant Productivity." Biology Review. Vol. 38: 385–425.
[3] Mann, K. H., 1973. "Seaweeds: Their Productivity and Strategy for Growth." Science, Dec. 7, pp. 975–981.

It was found that over a 2-year period the overall annual production was high for a given plant. This high productivity took place with the release of 35 to 40 percent of the overall gross production as dissolved organic matter (i.e., dissolved carbohydrates, etc.). This release was not measured directly but was determined on the basis of other laboratory studies, thus, the figures may be much higher than might be found in nature.

There is striking seasonality of kelp growth in St. Margaret's Bay, with maximum growth in winter and early spring. This seems unusual at first glance since water temperatures were near zero and day lengths short. The answer seems to be that nutrient concentrations were highest at that time since maximum growth occurred prior to the spring bloom of phytoplankton which depletes nutrients. It has been postulated that stored carbon reserves are used for rapid winter growth when nutrients are abundant and that growth during the low-nutrient periods is facilitated by stored nutrient reserves. The storage capabilities of seaweeds are of obvious importance and should be considered in any evaluation of their productivity in a seasonably variable, natural ecosystem.

An analysis of seaweed-mariculture productivity was prepared by De Boer and Ryther from data on several species (other than *Macrocystis*) cultivated in test tanks in Washington, Florida, Massachusetts, and in ponds or bays in Taiwan, Japan, and Korea. They concluded that, given favorable growing conditions, it seems realistic to expect production rates to exceed 50 dry metric tons (not ash free) per hectare per year based on a 5- to 6-month growing season in temperate climates. This conclusion, of course, applies to closed pond cultivation and not open ocean farms.[4]

---

[4] De Boer, James A., and J. Ryther, 1977. Potential yields from a waste-recycling algal mariculture system, pp. 231–246. In Robert W. Krauss (ed.), The marine plant biomass of the Pacific northwest coast. Oregon State University Press, Oregon.

FIGURE 12.—Seaweed cultivation and harvesting in China.



Source: M. Ueushul

FIGURE 13.—Japanese open sea net-type structure for cultivating kelp.

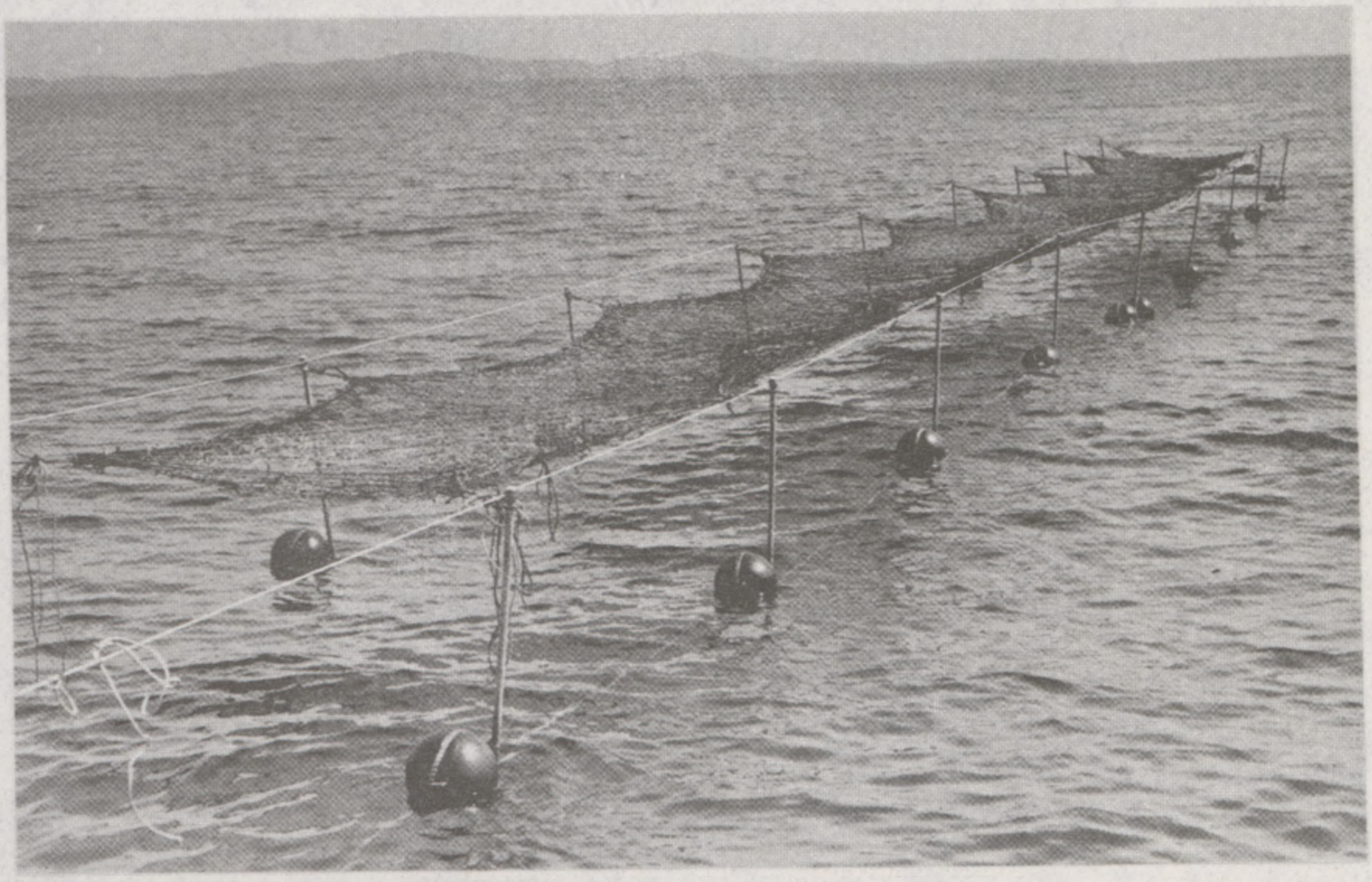

Source: M. Neushul

51-285 O - 80 - 5

A study of productivity of marine plants by Littler and Murray recorded daily data in terms of grams of carbon per square meter per day, and compared their findings with those of others. For kelp, multiplying grams of carbon by 2.5 yields a rough estimate of grams of dry weight produced per day. Although it is unrealistic to do so, because of the short periods of time over which productivity measurements are made, one can multiply by 365 to get g/m sq/year, and then convert into metric tons/hectare/year. Such a calculation produces a range of marine plant productivities from 5 to 80 dry metric tons (not ash free) per hectare per year.[5]

The above discussion indicates that seaweed productivity is relatively high when compared with many natural terrestial ecosystems and therefore the potential exists for high productivity in a cultivated ocean farm.

Kelp Genetics and Seed-Stock Production

Future marine farms will require a dense, productive aquatic crop. *Macrocystis*, or giant kelp, is one such crop that has already been successfully grown in the laboratory and raised in the field to adulthood.

Various methods have been developed to obtain *Macrocystis* sporophytes in the laboratory. The following method is one used to restore some of the kelp beds along the southern California coast:

Sporophylls are collected from large mature plants and returned to the laboratory. They are then placed in containers and covered with chilled, filtered seawater. Spores are released within 2 or 3 hours, and the spore solution is poured over racks of polyethylene film. The spores settle on the film and produce gametophytes and eventually sporophytes. After 2 or 3 days the films are transferred to long tables of flowing seawater where the sporophytes are allowed to develop to a size of 100 to 300 cells. The sporophytes are then scraped from the polyethylene films and suspended in seawater, generally in a volume of less than 5 gallons. This solution of sporophytes is then transported to an acceptable site for kelp growth and poured into the ocean with a funnel and a hose that reaches the ocean bottom. In this way the sporophytes are distributed by the thousands in a habitat in which they may attach and survive.

Some researchers believe that the California kelp beds at Abalone Cove, Whites Point, Cameo Shores, Dana Point, and other areas have been moderately aided in their reestablishment by this work. The approach does have some problems, however, including contamination of the films and young sporophytes by other marine growth. Other algae types can easily cover the surfaces of the baby plants, crowd them out, and overcome them. Nutrients must be high enough to support sporophyte growth yet low enough to hold unwanted populations at manageable levels. This is a delicate balance to achieve.

A more serious problem is that of dispersing the kelp embryos. Since the plants are released into the ocean randomly without being attached to a substrate they are at the whim of the tides and currents. Out of every 1,000 kelp embryos released perhaps only 1 may survive

---

[5] Littler, M. M. and S. N. Murray, 1974. Primary productivity of marine macrophytes from a rocky intertidal community. Marine Biology, 27:131–5.

to adulthood and to reproduce. This approach would be too random even if one farmed the ocean bottom in fairly shallow water. Thus, to establish plants in a definite location, the embryos must be given a substrate before they are placed in the ocean.

W. J. North solved this problem by developing sporophytes on wooden or PVC rings in a manner similar to that using the polyethylene film.[6] The rings are then attached to the stalks of other plants or other substrates on the bottom of the ocean to create an artificial kelp bed. The Kelco Co. in San Diego, which harvests seaweed, has also made use of this technique with success. The only drawback to this method is that it is very labor intensive, with every kelp plant needing individual planting by a diver. These labor-intensive techniques would not be economical for a large ocean farm.

In another approach similar to that employed by North, sporophylls are collected and wiped as clean as possible to remove the contaminating organisms. The sporophylls are then covered with damp paper towels, allowed to sit overnight and then immersed in seawater the following day. Spore release is obtained and the spores settle on a substrate which will eventually be put into the ocean with the sporophytes still attached. The spores are held in enriched seawater and sporophyte production is encouraged by holding the gametophytes in the dark for one night and then returning them to continuous illumination.

When the sporophytes reach a size of 2 to 3 mm they are transferred to racks in the ocean, supplied with nutrients in the form of a slow release fertilizer and eventually attached to chain lines on the ocean floor. Here they will grow and reproduce as if they were permanently attached to the bottom.

A second approach developed by Michael Neushul at Santa Barbara is to clone thousands of genetically uniform kelp plants.

These genetically uniform gametophytes can be seeded onto string and specific genetic crosses made. The result is thousands of identical plants growing on a substrate which may be outplanted directly into the ocean. This approach seems to be a logical method of investigation since one could then eventually raise "pedigreed" kelps. Farmers would be able to raise kelps bred specifically for high methane production, or alginate content, fast growth, or combinations of characteristics.

No such research for high methane-producing breeds has yet been initiated. Also, monocultures are not always desirable because of the possibility of vulnerability to specific diseases.

Estimating Kelp Farm Productivities

To estimate the production per unit time for a kelp farm or from a natural kelp forest, one needs to first define the standing crop. From the literature, values can be obtained ranging from 5 to 220 wet metric tons/hectare. The following table compares these standing crop estimates for some natural kelp beds.

---

[6] North, W. J., 1971. Introduction and background, pp. 1–97. In W. J. North (ed.), The biology of giant kelp beds in California. Nova Hedwigia 32.

Estimates of Macrocystis (*standing crop*)

Location of kelp forest:	*Metric tons (wet) per hectare*
(Aleem) [1] La Jolla, Calif	50–90
(Coon) [2] Goleta, Calif	70–91
(Gerard) [3] Monterey, Calif	5–60
(McFarland & Prescott) [4] Paradise Cove, Calif	44–58
(North) [5] Pacific Mexico and southern California	30–220

[1] Aleem, A. A., 1973. Ecology of a kelp bed in Southern California. Botanica Marina 16:83–95.
[2] Coon, L. M. and E. J. Field. ,1976. Nootka Sound kelp inventory, 1975. B. C. Marine Resources Branch, Fish Management Report No. 2, 27 p.
[3] Gerard, Valerie, 1976. Standing crop, production, and loss of Macrocystis pyrifera in a kelp forest in Monterey Bay, California. University of California, Santa Cruz. (In press).
[4] McFarland, W. N. and J. Prescott, 1959. Standing crop, chlorophyll content and *in situ* metabolism of a giant kelp community in Southern California. Public Institute of Marine Science. 6:109–132.
[5] North, kelp, pp. 1–97.

Most of these values are probably from small samples and single measurements and are not representative of an annual average. W. N. Wheeler and D. C. Coon have observed two ways in which standing crop varies. First, the total number of plants and fronds per unit area changes with seasonal storms and general growth conditions. Second, the weight of individual plant fronds changes—per unit length—seasonally. Spring fronds may weigh twice as much as fronds produced by the same plant during fall. Based on the values in the table above, maximal values observed in certain natural kelp forests may reach over 200 wet metric tons per hectare. While these data alone cannot be used to extrapolate to a cultivated marine farm, they do illustrate the range of standing crops that many be expected. Also, some researchers claim that cultivated systems are usually more dense than wild stands of the same plant and it may be appropriate to project density values even greater than those above. Others note that this is only true when required nutrients are provided. No measurements are available to establish possible nutrient levels for future ocean farms. However, the information could be extrapolated from studies of natural kelp beds off southern California.

The spacing of the plants in a natural kelp forest varies. In the case of the high values of North (220 wet metric tons/hectare), measurements were made in young kelp forests, with a high percentage of young plants close together. In contrast, the 70–91 metric tons/hectare figures of Coon are from an old established bed with large multifrond plants spaced some distance from one another.

It is of particular interest to potential farmers to consider natural kelp ecosystems which may be extremely dense, particularly where a rapid turnover of the complete population is experienced. A kelp forest composed of many young plants has a much higher biomass per unit area than one made up of older, larger plants.

This can be illustrated by comparing the long-lived kelp bed off Ellwood pier in Santa Barbara County, with one on the Atlantic Coast of South America (Patagonia) studied recently by Martin Hall. The former is a perennial population of large, vegetatively reproducing plants, while the latter is a boom-or-bust community where the entire kelp forest forms, grows and dislodges in a period of 2 years of so.

A marine farm based on young plants and frequent reseeding (perhaps even one harvested in such a way that whole plants are taken from it, rather than merely cutting a surface canopy) might be more productive than those being discussed.

Plant Growth Rates

The growth rates of the giant kelp, *Macrocystis*, have been determined by a number of botanists using various techniques. The usual method is to select fronds randomly and measure their length at time intervals. Here only whole plant measurements are considered. The following table gives growth rates of natural kelp beds as measured by various researchers.

Location:	*Percentage of growth per day*
Los Angeles, Calif. (Sargent and Lantrap, 1952) [1]	3. 0
La Jolla, Calif. (Neushul, 1963) (Juveniles) [2]	2. 9
Southern California (North, 1977) (Juveniles) [3]	4. 8–10. 9
Goleta, Calif. (Coon and Wheeler, 1975–77) [4 5]	1. 7–2. 9

[1] Sargent, M. C. and L. W. Lantrap, 1952. Photosynthesis, growth and translocation in giant kelp. American Journal of Botany. 39:99–107.
[2] Neushul, M. and F. T. Haxo, 1963. Studies on the giant kelp *Macrocystis*. I. Growth of young plants. American Journal of Botany. 50:349–353.
[3] North, W., 1977. Algal nutrition in the sea—some thoughts about management possibilities. Presented at the symposium on marine plant biomass of the Pacific Northwest coast. Oregon State University. March 3.
[4] Coon, *Nootka Sound*, 27 p.
[5] Wheeler, W. N., 1978. Encophysiological studies on the giant kelp, *Macrocystis*. Ph. D. dissertation, University of California, Santa Barbara. 179 p.

The above table presents growth rates of natural kelp beds based on measurements of weight increases in all fronds of whole plants or by converting length increases in all fronds to weight with a standard conversion factor. W. Wheeler, in 1978, also calculated a theoretically possible growth rate for mature *Macrocystis* plants of 5.7 percent per day.

These growth rates would not necessarily convert to estimates of maximum yield without also considering growth rate variations as a function of standing crop. Pond experiments with other species have also shown that growth rate decreases as standing crop increases (probably because of restricted sunlight) and that maximum yield occurs at less than maximum growth rate.[7] *Macrocystis* researchers, however, have not documented such precise relationships.

Productivity Estimates

Estimates of kelp farm productivity can be made by examining data from natural beds and assuming that a farm would be similar to the natural situations.

Macrocystis production values from natural kelp forests in California are shown in the following table. These data are reduced to dry tons for reader convenience.

Location:	*Dry metric tons (not ash-free) per hectare per year*
Goleta, Calif. (Coon and Wheeler, 1975, 1977) [1 2]	26–55
Monterey, Calif.[3] (Gerard, 1976)	28
All California harvest records for 1969 through 1970 (average)	1
Goleta Bay (bed 26) harvests calculated from harvester log book for 1975 (average)	3
Goleta Bay (bed 26) harvests calculated from harvester log book for 1975 (range)	2–15

[1] Coon, *Nootka Sound*, 27 p.
[2] Wheeler, *Macrocystis*, 179 p.
[3] Gerard, *Kelp forest*.

---

[7] De Boer and Ryther, *Mariculture*, pp. 231–246.

A second way of estimating kelp farm productivity is to calculate a value using reasonable standing crops and growth rates based on the data supplied in the previous sections.

This method has been used by some researchers to make rough estimates of expected production rates for a hypothetical marine farm. Such a rough estimate would be as follows:

(1) For a "low" value

assume

- 50 wet tons/hectare standing crop.
- 2 percent per day growth rate.
- 365 days/year growth.
- 50 percent factor due to regeneration after low standing periodic harvests.

Productivity=22 dry metric/tons/hectare/year (dry weight is 0.12 ×wet weight).

(2) For a "high" value

assume

- 100 wet tons/hectare standing crop.
- 3 percent per day growth rate.
- 365 days per year growth.
- 75 percent factor due to harvesting.

Productivity=100 dry metric tons/hectare/year (dry weight is 0.12×wet weight).

The above estimates are rough projections and do not account for the fact that standing biomass and growth rate data have not been determined together, or that experiments to evaluate nutrient and light limitations have not been completed. Also, linear growth rates are assumed for whole beds rather than compound growth rates.

There is considerable debate among researchers about hypothetical productivities, with some claiming much higher rates than those cited above, and some much lower. It is clear to most that more research on actual cultivated beds is necessary before reasonable projections can be made with some confidence.

Factors Affecting Kelp Productivity

North divides the negative factors affecting kelp productivity into physical, chemical, and biological categories. The most destructive force in California kelp forests appears to be wave action. Waves tear out plants, particularly those damaged by biological activity or otherwise weakened. Damage often is associated with temperatures above 20° C. This may or may not be due to warm temperature per se, as other factors such as low nutrients frequently coincide with periods of warm water.

Sediment deposits on holdfasts or blades inhibit production. Whether this is due to light limitation or to the enhancement of bacterial populations of the plant surfaces is not known. Sediment may also alter the chemical environment adjacent to the plant. In 1976, upwelling occurred from March until June instead of August to September, as is often the case. In this low nutrient year some kelp forests lost as much as 90 percent of their frond population.

Adverse biological factors influencing kelp are numerous. North points out that competition for light and space is particularly important. Paine and Vadas have shown that urchin grazing enhances diversity in a *Nereocystis* kelp forest by upsetting the dominant role of larger kelps.[8] North points out that severe grazing can denude the bottom of nearly all vegetation. In southern California urchins can strip almost all algae from large areas of the sea floor and maintain this barren condition for long periods of time.

Drift seaweeds are important food sources for benthic invertebrates such as abalone and urchins. Large aggregations of urchins have been seen to come through natural, coastal kelp forests in "fronts" moving as much as 100 feet per month.[9] Whether they would pose similar problems in a deep water ocean farm environment is unknown. Quicklime has been used to kill invertebrate, but it also harms such commercially valuable animals as abalone. In nature, invertebrate populations appear to be controlled by sea otters.

Fish feeding on epiphytic animals can be important, both in supplying food for the fish and in reducing the populations of animals on the kelps. Many of these animals are capable of rapid reproduction and colonization and could spread through an open ocean farm. Where fish are scarce, such as has been observed around ocean test farms, usual populations of encrusting animals have been noted. However, fish may eventually be attracted to these farms as they usually are to oil rigs and artificial reefs.

Disease-causing micro-organisms on kelp have not been clearly identified and tested. Black rot and stipe rot are assumed to be caused by surface micro-organisms, as are tumor-like swellings. These phenomena are sometimes associated with senescence. Since kelp fronds have a fairly short life, senescent fronds are commonly found. These have pale blades and limp, weak, easily broken tissue. Senescent fronds have bladders that are often partially filled with fluid. Black rot appears first on blade tips and then spreads toward the base. It commonly occurs in summer when surface nutrients are low. Scotten[10] was not able to infect healthy plants with a preparation made from macerated infected tissue, although this did contain abundant micro-organisms. Wart-like protuberances occur on kelp, particularly those near outfalls. North notes that stipe rot is uncommon, but more usual near sewage outfalls than elsewhere.

It is not easy to define marine plant disease; neither is the demarcation between normal and diseased individuals a definite one. Undoubtedly many cases have gone unnoticed. Those diseases which have been documented are largely the result of chance or the work of a few individuals investigating specialized areas. Not until marine plants became of economic importance and hybrid strains were developed did the subject of marine plant pathology begin to get significant attention.

---

[8] Paine, R. R. and R. L. Vadas. 1969. Calorific values of benthic marine algae and their postulated relation to invertebrate food preference. Marine Biology. 4:79–86.

[9] Clark, W. D. and M. Neushul. 1967. Subtidal ecology of the southern California coast, pp. 29–42. In Olsen and Burgess (eds.), Pollution and marine ecology. Interscience Publishers, New York.

[10] Scotten, H. L., 1971. Microbiological aspects of the kelp bed environment, pp. 315–318. In W. J. North (ed.), The biology of giant keep beds *Macrocystis* in California. Nova Hedwigia 32.

Where concentrations of a certain host occurs, either naturally or artificially, all available evidence indicates that disease is as prevalent in a marine system as in a terrestrial one. Some researchers suggest that no single kelp strain should be farmed because of this. As one might expect by extrapolation from terrestrial plant pathology, disease incidence is subject to seasonal influence. Low nutrient levels and elevated temperatures can render the plant susceptible to disease.

Nutrients

In addition to physical problems such as wave action, perhaps the largest obstacle facing any potential marine farmer is that of supplying his crop with enough nutrients. Just as a terrestrial farmer may have to fertilize to bring in a successful crop, so must anyone working with sea plants. The open ocean often has very low levels of surface nutrients. Nitrogen, which seems to be a major limiting factor in the growth of marine plants, is scarce. Surface waters in the open sea rarely attain values high enough to support good plant growth. Therefore, nitrogen must be supplied if a large-scale open ocean farm is to succeed. It is likely that phosphorus and other nutrients may also be limiting. All of these nutrients are supplied with natural upwelling seawater along coastal regions where natural kelp forests grow.

Researchers have estimated the major nutrients required for kelp growth. Based on dry weight, the following percentages of nutrients have been measured:

Element:	*Percent of dry kelp weight (average estimates)*
Nitrogen	1. 6
Phosphorus	0. 4
Manganese	0. 005
Iron	0. 15

One of the first factors to consider is the availability of various nutrients in seawater. The ratio of nitrogen to phosphorus by weight in seawater has been estimated to range from 4:1 to 36:1, so that it appears if proper phosphorus levels were supplied in upwelled water, nitrogen would be no problem. It should be noted, however, that waters where ocean farms might be anticipated have not been tested for nutrients and much needs to be learned of the requirements and availability of nutrients. To determine the amount of upwelling needed, both the form of nitrogen used by the plants and the rate of recycling of nutrients within the canopy must also be considered.

One researcher (Goldman) says "the critical component in seaweed mass cultivation is the supply of adequate nutrients to make sunlight the limiting factor." [11]

One researcher (Neish) states that "seawater pH conditions will undoubtedly be related to metabolic rates and pH is closely related to carbon cycling." [12]

And Roels points out "the issue which should be more thoroughly discussed is the fate of the deep water after it is pumped to the surface. All our work has indicated that pumping of deep water in the open sea,

---

[11] Goldman, Joel C. Woods Hole Oceanographic Institute, personal communication.
[12] Neish, Iain. Marine Colloids Co., personal communication.

without containment at the surface, will result in great dilution of this deep water and a rapid sinking of the deep water, so that the nutrient enhancement of the surface layer is negligible." [13]

If an ocean farm used upwelled waters, probably the scheme would be based first on discovery of an adequate supply of nitrogen and phosphorous since the necessary concentrations of manganese and iron in seawater are common throughout the oceans.

The simple relationship between the amount of a given element in the water and the amount in the plant is a deceptive one, because nutrients may well be consumed and stored for later use. Thus, this "luxury consumption" may lead to the filling of a nutrient pool. The rate of filling, the size of the nutrient pool, and the rate and timing of the mobilization of stored nutrients all complicate seaweed nutrient requirements. In addition, one can see (fig. 14) that there is striking seasonality in the amounts of nutrients in near-surface water. Values in different waters may not necessarily be the same at all seasons or from one ocean region to another.

Effects of Plant Fertilization

It is possible that marine farms could be more productive than natural ecosystems. These natural ecosystems are pulse-fertilized yearly, much like the seasonal availability of water on land. If optimum nutrient uptake rates prevail, boundary layer fertilization methods are devised and nitrogen storage capabilities are found to be as high as expected, then it would seem that plants naturally adapted for pulse fertilization would increase yield.

Figure 14.—Variation in nutrient availability in near-surface water.

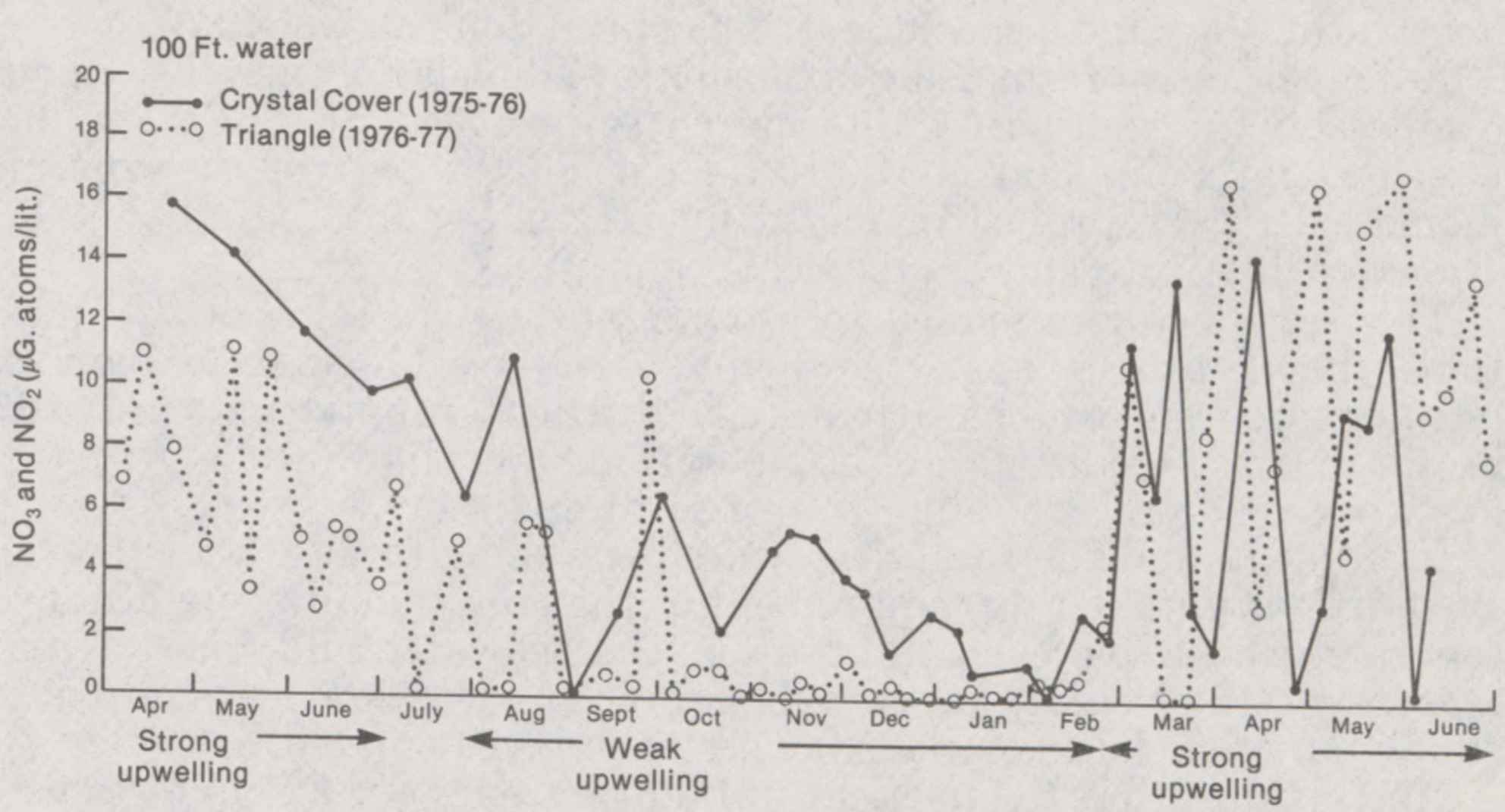

Source: GE Co.

The Chinese, on their seaweed farms, dip plants in fertilizer for 30 minutes which produces rapid growth for 2 weeks. With a 2-hour dip,

[13] Roels, Oswald. University of Texas, personal communication.

51-285 O - 80 - 6

they extend rapid growth to 8 weeks. According to Craigie and Chapman, nutrient storage is 2 to 8 percent of the dry weight and this is depleted in 2 months if 1 percent of the dry weight is used per month. A more effective system would result if point fertilization were realistic.

A fertilizing experiment was conducted by North and Kelco Co. at Point Loma, Calif., from October 1977 to January 1978. The kelp bed in the immediate vicinity of the fertilizing cannister seemed to make the fastest comeback after harvesting operations. It also survived well during a severe storm. However, the growth measurements of the plants at both the experimental and the control sites were not significantly different. These first in-the-sea experiments, qualitatively if not quantitatively, indicate that fertilizing may be helpful to a kelp bed in certain respects. Unfortunately, the experiments to date are limited and more research is probably needed. For a large operation, fertilizer should be distributed equally throughout a given area and kept within the kelp bed.

Artificial Upwelling

Since large scale commercial fertilization is thought by some to be uneconomical it has been proposed to use instead the deep waters of the ocean as a source of nutrients. But this approach also poses problems. Upwelling water would supply the farm with needed nutrients, but at a very high cost given current technology. Also, once the nutrients have been pumped to the surface, similar problems exist as with the fertilizing cannisters. The upwelled water must be distributed evenly throughout the farm. This could be accomplished by pipes located throughout the farm but such designs have not yet been made. It will also be necessary to consider environmental effects of both upwelling and artificial fertilization early in the planning of any large farm. Very little specific work has been done on this to date.

A biological test farm using artificial upwelling is now installed about 5 miles off the southern California coast in 600 meters of water between Dana Point and Newport Beach. This is part of the marine biomass R. & D. project managed by GE and sponsored by the Gas Research Institute and the DOE. (See ch. VI.)

This test farm is intended to provide answers to some of the questions that must be answered before a large-scale marine biomass farming program can be attempted. Nutrient supply may prove to be the biggest challenge of the operation, but the upwelling system has worked so far, according to test farm operators.

In order to find the total deep water upwelling rate for a kelp farm, the nutrient uptake rate requirement of the crop should be determined separately both for each nutrient in the seawater and for different seasons of the year. The upwelling flow of deep water required to supply any deficient component may then be calculated.

North states that the nutrient uptake efficiency for a kelp farm will probably lie between 30 percent and 60 percent.[14] However, other researchers feel that, depending on weather, surface conditions, underwater currents, and other factors, this efficiency could even be lower. Assuming a range of uptake efficiency, the required amount of upwelled seawater can be calculated for given productivities.

---

[14] Wilcox, H. A., 1975. Artificial oceanic upwelling, Naval Undersea Center, San Diego, Calif. July. p. 3

In reply to an OTA request for comment, chemical engineer Edward Hall states, "the proponents of artificial upwelling have based their optimism regarding this technique on the assumption that advection of seawater well below the thermocline will be sufficient to maintain adequate concentrations of most nutrients below plantation sites. However, knowledge of advective flows of deep sea currents is very imperfect. It is known that in large regions of the world's oceans these deep sea currents are extremely slow. Plantations located above such a region might operate happily (provided all the other questionable assumptions are correct) until the nutrients dissolved in these stagnant waters were exhausted, an event which might occur in a relatively few years.

"This phenomenon has been discussed to only a very limited extent in conjunction with the artificially upwelled nutrient system proposed in the AGA program. Since we are dealing with a little-known phenomenon, it may prove to be of no significance. However, should this not be so, the mining out of deep seawater could lead to false conclusions regarding feasibility of the technique proposed and regarding early analysis of effectiveness in many regions of the world's oceans." [15]

---

[15] Hall, Edward. Chromally Ocean Resources Co., personal communication.

MARINE FARM DESIGNS

Although seaweed is being harvested throughout the world, its culture is almost completely confined to well protected coasts or harvested from land-based ponds. High technology, intensive culture and open ocean marine farming projects such as those proposed for future marine biomass production are mostly undeveloped and untried on any large scale. Some existing ocean engineering technology, such as pipe, platform, mooring and substrate design, can be applied to open ocean farming. Other, more uncertain engineering areas include: upwelling flow systems, the distribution system and dispersion characteristics of upwelled water, nutrient distribution and the configuration of artificial substrate. Related technology is available in the fields of pump design and harvesting technique.

Marine Farming and Hydrodynamics

The establishment of an open ocean farm will depend on a clear understanding of the effects of water motion both on any farm structure and on the plants themselves. For example by increasing the concentration of carbon dioxide around a plant one may increase productivity. Plant growth can also be stimulated through increases in the water motion in a productivity chamber. It is thought there is a connection; that by increasing the water motion, one increases the rate at which metabolites such as carbon dioxide diffuse to the algal cell surface.

The first indepth description of the relationship between algal form, changes in form, skin friction drag and the effect of water motion on algal stipes, dealt with the southern sea palm.[1] Macroscopically visible changes in a kelp exposed to water motion both in the sea and in a large circular water tunnel were measured by Wheeler.[2]

A second paper [3] focused on the basic process of algal spore adhesion.

In this study a device called an "ocean surge and current array simulator" was developed. Its principal operational component was a submerged spray head which moved back and forth over a surface. The oscillating pattern of water movement simulates the actual back-and-forth movement of water against the sea floor as a wave passes. (A fully attached spore can withstand forces as great as 100 times its own weight without being dislodged.) Controlled hydrodynamic conditions were found to be essential to maximize the growth and minimize damage in tank cultivation efforts. A scaled-up version of the laboratory spray head device has made it possible to complete the life history of *Macrocystis* for the first time in the laboratory. The

---

[1] Charter, A.C.C., M. Neushul, and C. Bariolotti. 1969. Proceedings of The International Seaweed Symposium. 6:89–105.

[2] Wheeler, W. N., 1978. Encophysiological studies on the giant kelp, *Macrocystis*. Ph. D. Dissertation. University of California at Santa Barbara. 179 p.

[3] Charters, A.C.C., M. Neushul, and D. Coon, 1973. The effect of water motion on algal spore adhesion. Limnol. Oceanogr. 18:884–896.

use of this device has also made it possible to raise large marine algae and to develop seed stock generating strategies that would seem to be very important to future open ocean mariculture.

Clearly, the successful cultivation of large benthic algae is best accomplished by considering both the algae involved and the motion of water around them.

The first attempts to study effects of water motion on blades of giant kelp were those of W. Wheeler, who built a small water tunnel in which blades were placed.[4] It was found that increasing water velocity increased the flux of carbon dioxide across the boundary layer and to the kelp frond. Unpublished dyestream studies by A. Charters at the University of Santa Barbara, Calif., illustrate somewhat these effects of water motion.[5] These hydrodynamic investigations demonstrate that diffusion of the dyestream changes drastically across the boundary layer with increasing water velocity. This means that there could be a direct relationship between water motion and metabolism in the cell membrane.

The solution to both the engineering problems of maintaining a marine farm and the marine botanical problems of enhancing nutrient uptake and gas exchange will involve careful hydrodynamic work, both in laboratory water tunnels and in the sea.

Siting Considerations for Ocean Farms

In Japan, there has been a marked tendency for ocean farms to expand and move west along the country's protected southern coast. This shift has been stimulated by increasing demand, pollution, and conflict with industrial landfills in the east.

The cultivated species of *Porphyra*, a red algae, occur in nature on solid substrate in the intertidal zone. When subjected to periodic exposure to the air, these species resist grazers, compete against other algae effectively, and develop biochemically for better flavor. Until a few years ago nets supported on floating structures could be exposed to the air only with great difficulty. Finally a *Porphyra* fisherman developed a usable raft-type structure which easily exposes many nets. This development opens much new sea area for maintaining nursery nets early in the season and for subsequent cultivation of high quality *Porphyra*.

Distribution of the various large brown *Laminaria* species is restricted mostly to the shores of Hokkaido, Japan's northern island. Natural stands have been consistent and productive enough that cultivation was not necessary until the last several years. Again, *Laminaria* is cultivated only in relatively protected areas on the Pacific Ocean side.

Probably the most significant aspect of China's algal industries has been an ability to cultivate various species far outside their natural ranges. Both *Laminaria* and *Porphyra* are native to Hokkaido in Japan and do not occur naturally in China, yet these algae now account for over 95 percent of the total production in China.

---

[4] Wheeler, "*Macrocystic*," 179 p.

[5] Neushul, et al., 1978. "Biomass Production Through the Cultivation of Macroalgae in the Sea," p. 100 Neushul Mariculture Inc., for the Office of Technology Assessment, Oct. 6.

Mass U.S. culture of seaweeds such as the giant kelps cannot be developed in the same manner as has been done in Asia. The Western U.S. coastline contains only a few bays such as Puget Sound which are protected from storms and currents. Coastal areas, particularly warmer areas of the continental United States, tend to have open, straight coasts. Where large bays occur, such as along the east coast, much of the area is already under intensive use.

Farms proposed to date[6] include an offshore current-floating system, a deep-ocean floating system, and an offshore anchored system.

The Sargasso Sea as a Model for a Substrate-Less Farm

The Sargasso Sea is the largest mass of float-bearing brown algae in the open sea, occuring naturally over large areas. Although sparse, it represents a natural ecosystem that might well serve as a excellent model for the design of a low-cost open sea farm covering a very large area.

Over 100 species of marine organisms (20 plants and 78 animals) have been identified in the Sargasso Sea. This discrete and unique marine plant community occurs over 600 million hectares (2 million square miles) of sea surface in the Atlantic between Florida and the northwest coast of Africa.

While float-bearing gulf weeds are the primary producers, other algae are also present. The *Sargassum* reproduces vegetatively. Plant fragments occur in patches or windrows, with about 10 percent of the plant being shaded by the bulk of the vegetation near the surface.

The vast area covered by the Sargasso Sea suggests that, in total, it may be extremely productive, although some authors point out that the animal populations consume plant material as rapidly as it is produced.

Recent measurements put standing crop of *Sargassum* at about 0.006 wet metric tons per hectare (2 tons (wet) per square nautical-mile).[7] These values are all lower than estimates from 1939 made by oceanographer A. E. Parr. Whether this difference is attributable to an actual decline in the standing crop of the Sargasso Sea during the 30 years since Parr's work, or whether it is due to short-term temporal variation or sampling differences, is not clear.

Net production is highest in the Gulf Stream and lowest in Continental Shelf waters.[8] In the Sargasso Sea itself, the production levels were one-half of the highest figures. It is likely that productivity depends on the rate of nutrient recycling, the size of the standing crop, and the ability of a "seed" population to survive during times when conditions are suboptimum.

A better knowledge of *Sargassum* would provide valuable clues as to how a floating brown algal marine biomass production system might be designed, minimizing the need for upwelling nutrients, costly substrates, or other expensive aspects of open sea farming that are now being discussed.

---

[6] Szetela, E. J., N. L. Krascella, and W. A. Beleher, 1974. "Technology for Conversion of Solar Energy to Fuel." United Aircraft Research Laboratories, rept. No. N911599–4 (NSF grant GI–34991).

[7] Howard, K. L., and R. J. Menzies, 1969. "Distribution and Production of Sargassum in the Waters of the Carolina Coast." Bot. Mar. 12:244–254.

[8] Ibid.

Platforms and Artificial Substrate

Offshore industry operations have in the past decade resulted in the development of platforms which can operate in severe weather. The technology has primarily been developed for oil and gas industry application, and the resulting structures are massive and costly. Given the fact that there is no existing domestic equipment readily suitable for ocean farming, it is instructive to review the techniques and practices in China, Japan, and Taiwan for intensive seaweed mariculture as well as proposed concepts for open ocean farm substrate systems.

Chinese farms grow *Laminaria* on ropes that hang down from bamboo surface structures. Fertilizer containers consist of a basket with an unglazed pot inside. The pot contains fertilizer which leaches out into the surrounding water.

In addition to vertical lines, the Chinese also use various types of horizontal lines. Some of the Chinese floating raft systems are like those of the Japanese, seedstock produced on twine wrapped around bamboo.

The Chinese first supplied nutrients from pots attached to their rope-line farms. Since the Chinese plants do not produce floats naturally, rubber, glass-ball, or ceramic-pot floats are used. Also, various methods of anchoring the farms to the sea floor have been developed. In Asia, man-made nets have supplanted bamboo grids as substrate.

In North America, several small prototype test farms have been operated as a part of U.S. research projects. A coastal marine farm (fig. 15) 30 meters (100 ft) on a side was installed near Corona del Mar, California at Crystal Cove where substrate depth was 12 meters.[9] The farm was anchored in 47.2 meter (155 ft) using styrofoam floats and engine blocks as anchors. An operating shallow-water test farm has also been installed in Goleta Bay. This simple system is being used to grow *Macrocystis*, *Macrocystis/Pelagophycyus* hybrids, and red alga *Eucheuma* at present. A minimal amount of fertilization has been done via the Chinese point-source method. This has been found to be effective when the plants are fairly small. No controlled in-sea fertilization experiments have been carried out to date on the Goleta Bay farm.

There have been several types of conceptual structures proposed. The five concepts which follow serve to illustrate a few of the generic ideas for designing artificial substrates.

(1) Tension Cable Grid[10] (Fig. 16)

A simple grid of flexible cable members which can support loads by axial tension. The cable grid is attached to moorings or anchors to maintain its shape. Kelp plants are attached directly to the cable.

---

[9] Neushul, Biomass, p. 131.

[10] James, A. L. and D. W. Murphy, 1976. Ocean food and energy farm project. Subtask 4. Preliminary design of substrate, p. 24. Vol. 1, September. Naval Undersea Center, Hawaii. Contract No. EY 76-A-03-1027.

FIGURE 15.—Crystal cove grid.

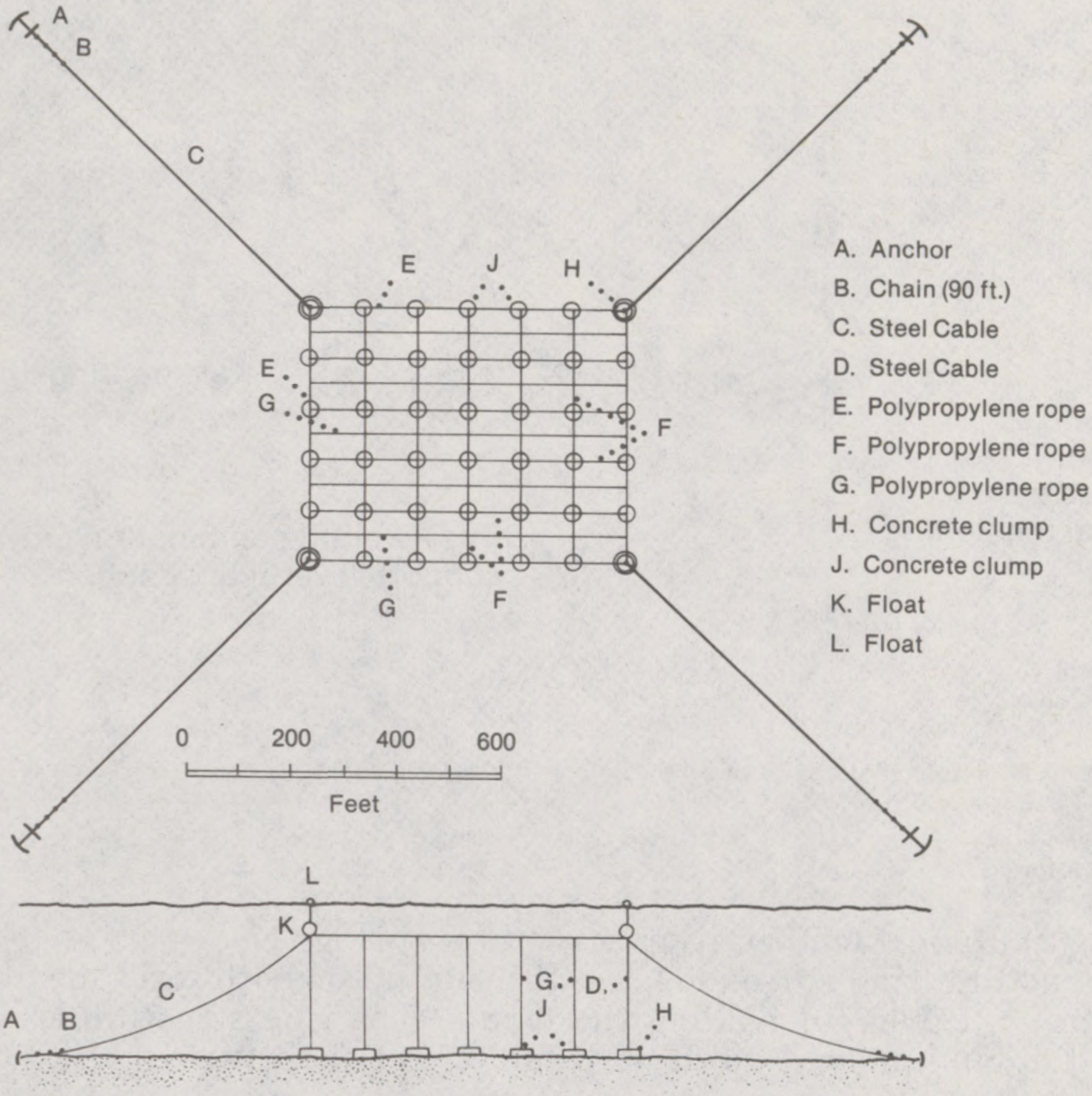

Source: GE Co.

FIGURE 16.—Tension grid substrate structure.

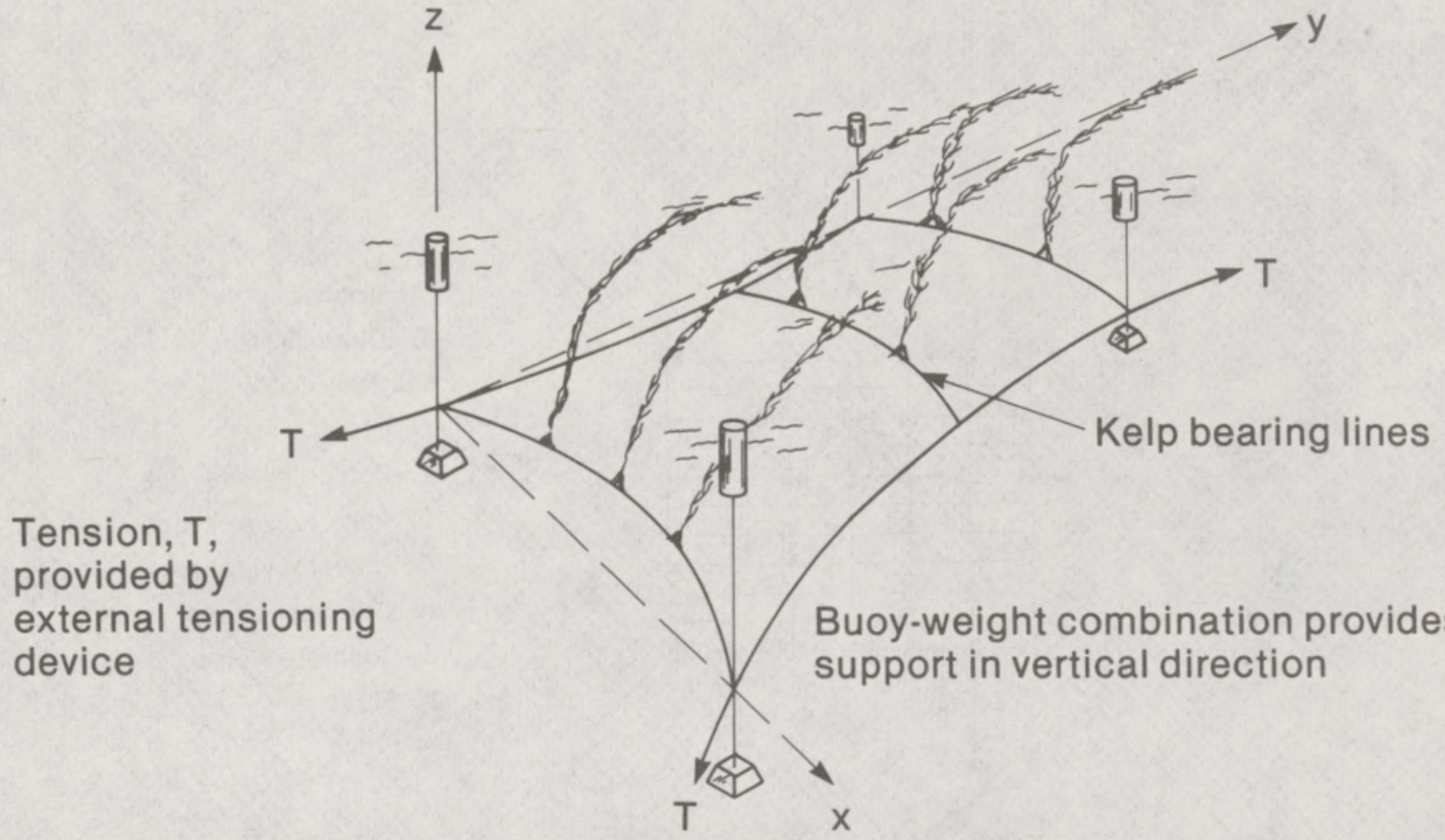

Source: U.S. Navy

(2) Rigid Member Ring Structures [11] (Fig. 17)

A structural ring surrounds a grid made up of both rigid members and tension cables for holding the plants. The ring structure is both buoyed up and moored down with cables and anchors.

(3) Inflatable Structures [12] (Fig. 18)

An inflatable structure which would be similar to the ring structure but it attains buoyancy from an inflatable ring torus which is part of the main structure. Plant holdfasts may be attached to tensioned radial spokes.

(4) Hexagonal "Umbrella" Module [13] (Fig. 19)

Similar to what was deployed at the small GRI test farm off the southern California coast, it is like a ring structure but with a support buoy attached only the center of the module and employing a hexagon shape made from both tension and compression members.

(5) Scrap Tire Substrate Structure [14] (Fig. 20)

Tires strapped together form a grid to hold plants. The grid would be moored in a fashion similar to the tension cable grid. Chemicals leached from the scrap rubber might prove harmful to marine organisms.

---

[11] Ibid., p. 12.
[12] Ibid., p. 17.
[13] Ibid., p. 14.
[14] Ibid., p. 16.

FIGURE 17.—Rigid member ring structure.

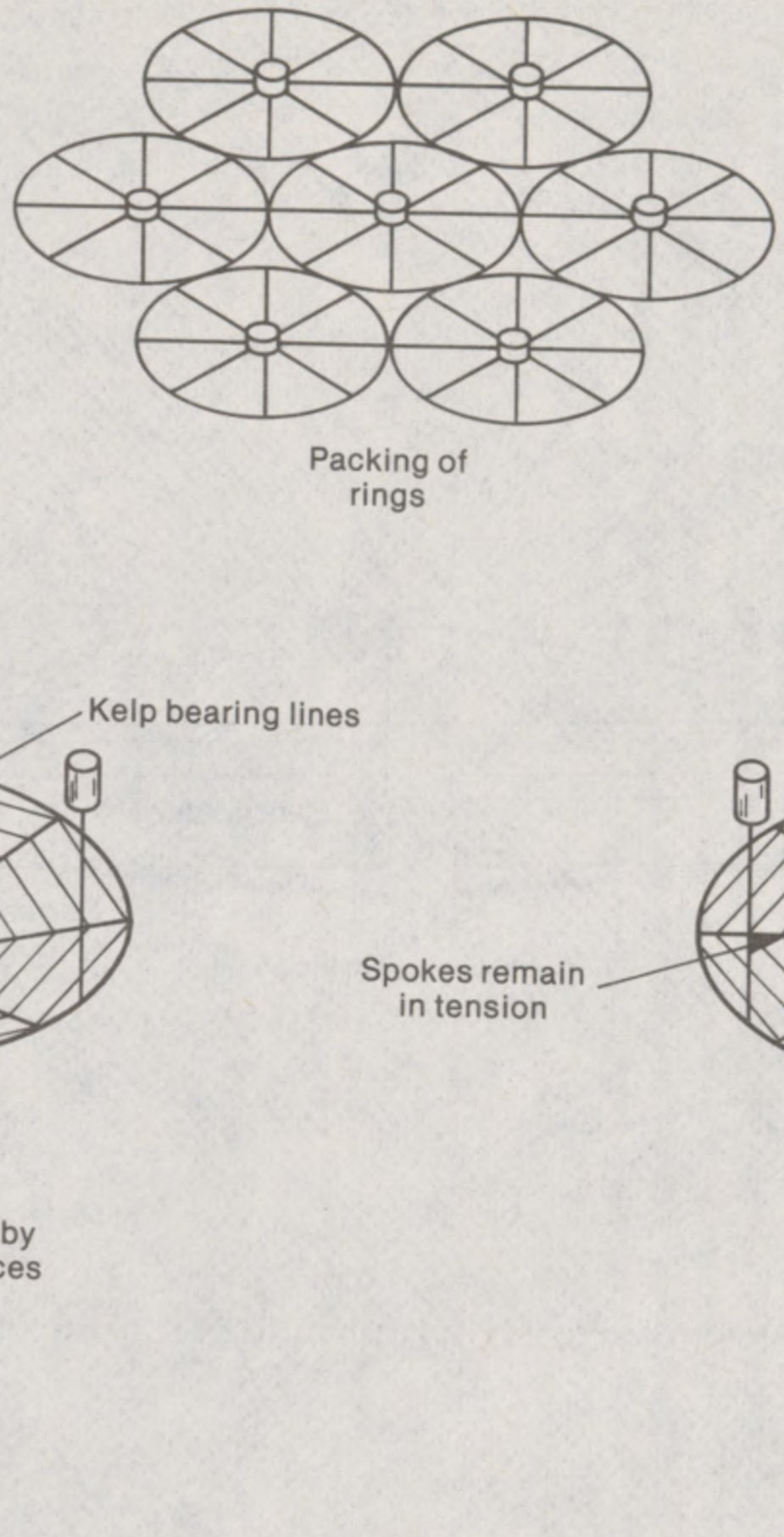

Source: U.S. Navy

FIGURE 18.—Inflatable torus farm system.

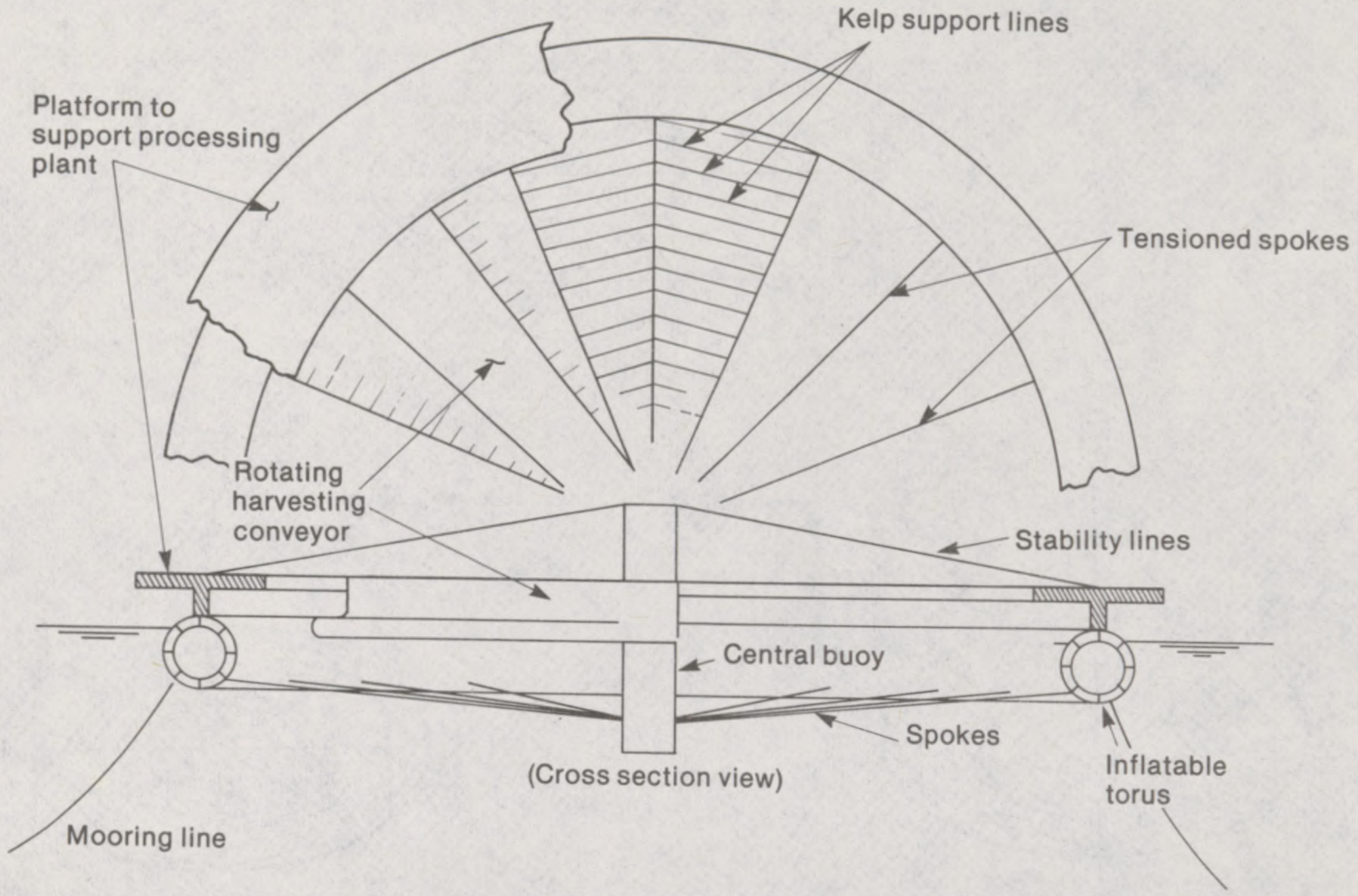

Source: U.S. Navy

FIGURE 19.—Ocean farm structure made from hexagonal modes.

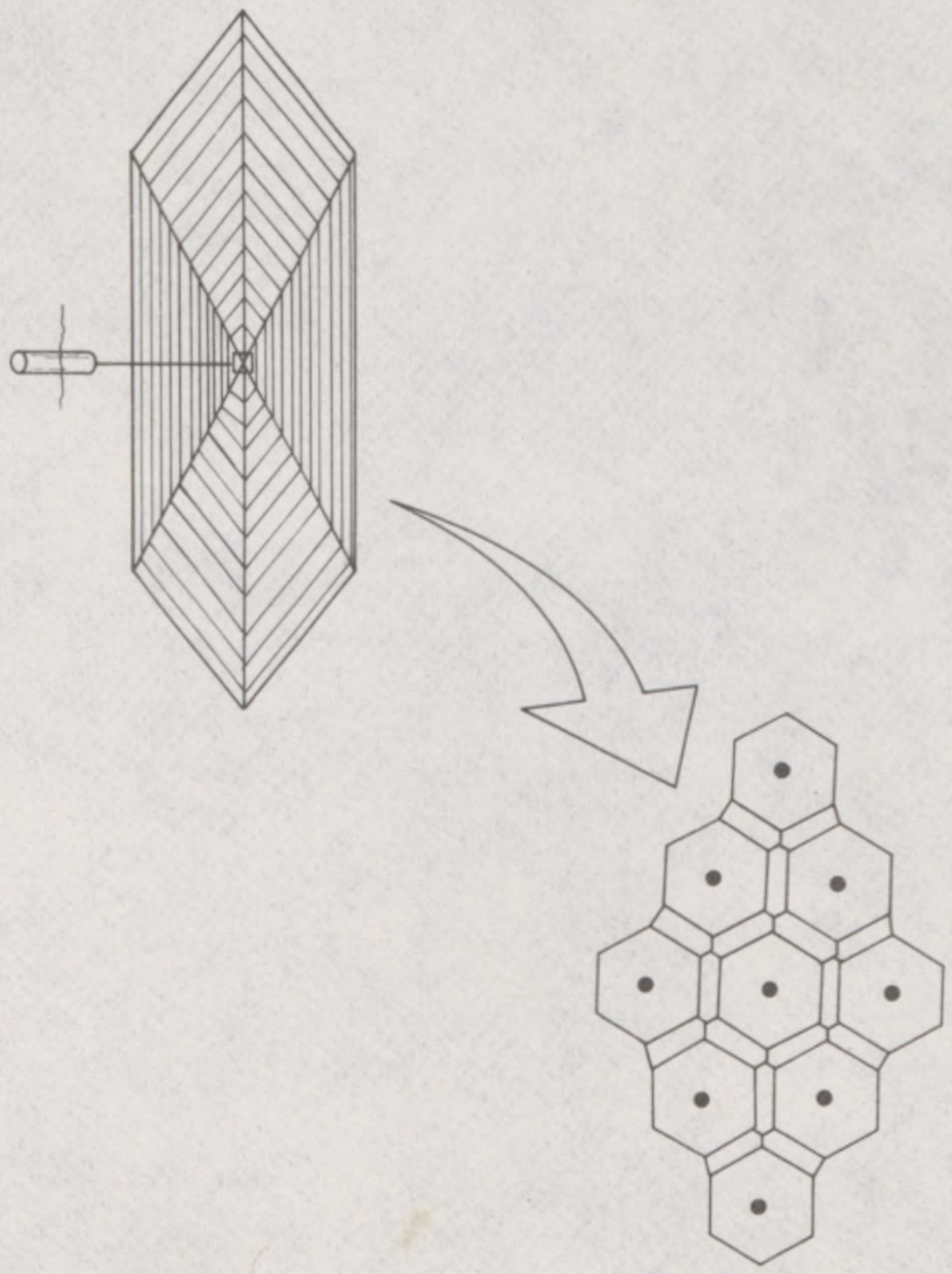

Source: U.S. Navy

FIGURE 20.—Scrap tire substrate structure.

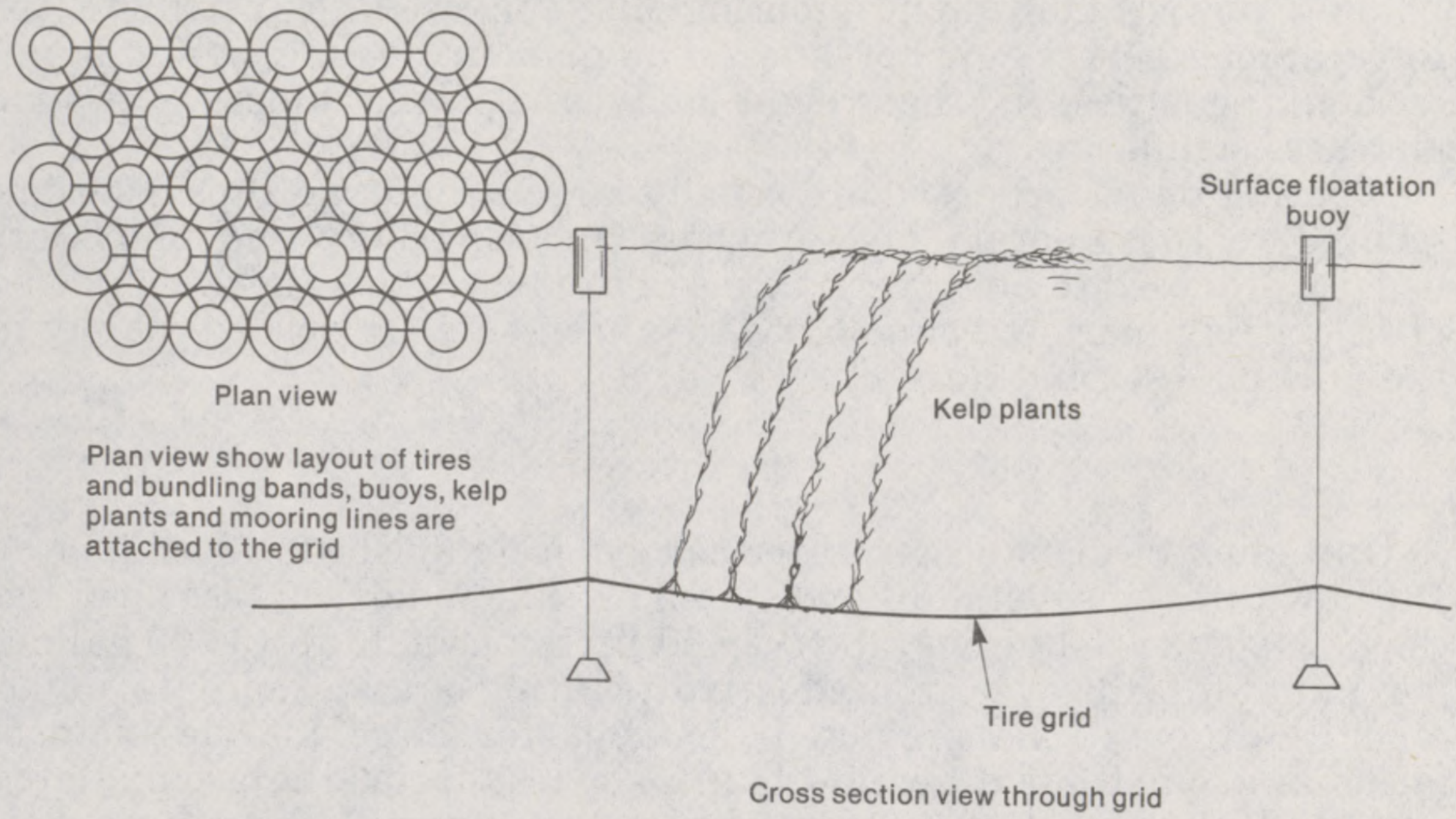

Source: U.S. Navy

Any artificial substrate must be capable of being deployed and maintained, and be compatible with other farm functions such as nutrient supply and harvesting. It must be designed so that if one substrate fails, other components do not. The substrate should operate and survive in open ocean waters and withstand certain wind conditions, waves, currents, and should have long design life.

PLATFORM AND SUBSTRATE MOORING LINES AND BUOYS

Mooring concepts have been engineered for offshore drilling platforms, shallow water ports, deep water ports and other ocean platforms. The state-of-the-art for the technology and hardware in mooring equipment is well established. The mooring line types used are chain, wire rope and synthetic fiber rope.

Ships of all sizes, offshore drilling rigs and large ocean buoys use anchor chain to moor, as it offers several advantages. It is rugged and not susceptible to abrasion, and tolerances for corrosion can be incorporated into the chain design by increasing the size of the links. The one big drawback to chain is its relatively low strength-to-weight ratio. Also, its holding power is degraded as the water depth increases.

Wire rope mooring lines can take much higher stresses than chain of comparable size and weight. Wire also has good abrasion-resistant characteristics. Some of the problems associated with wire rope include damage through kinking, spiraling and corrosion.

Synthetic rope is much more flexible than chain or wire rope. It is not subject to corrosion, elongates to absorb energy and has high strength-to-weight ratio. Because of its lightweight, its strength is not seriously degraded with depth. On the other hand, currently available synthetic rope has a relatively low breaking strength and is very susceptible to damage due to abrasion.

In cases where single point mooring does not develop sufficient holding power, multipoint mooring may be used to distribute the force among several anchor lines. The gain in holding power is not without penalties, as the weight and cost of the mooring system increases significantly.

Mooring buoys proposed are usually large cylindrical cans or drums secured to the mooring line. Anchors, mooring lines and buoys are usually proposed to hold ocean farms in fixed locations and are modeled after existing marine technology. Advancements are needed mainly in the area of costs and durability.

Pumps

Upwelling of deep ocean water can be accomplished, depending on the flow rate, by several different designs. The biological test farm has the capacity of delivering up to 2,460 liters per minute (9,300 gallons per minute). However, the effective planting area is hard to determine.[15] Although the predicted demands for large marine biomass farms are somewhat different than for a test farm, the accumulated data leads to the selection of axial flow type pumps. These propeller-type, axial flow pumps offer high efficiency, low cost and low maintenance. Prime movers can be supplied by conventional diesel propulsion units.

Other pump designs which have yet to be engineered are:

(1) Wave/vane/propeller pumps. (fig. 21) A vane or duck rotates about while extracting energy from the horizontal motion of waves. The vane is mounted on a hollow backbone attached to a counterweight. The inside of the duck and outside of the backbone are configured to form a spline pump which converts the low frequency rotation of the duck to high pressure hydraulic power. It is proposed to use this hydraulic power to drive a hydraulic motor/generator set which in turn would power a propeller pump. Tank tests have been run resulting in efficiencies of 90 percent. These power units are still being tested.

(2) Wave pump using buoy.[16] (fig. 22) The system consists of four major components: buoy, upwelling pipe, check valve and a water distribution piping system. In operation the upward acceleration injects an upward velocity to the water in the upwelling pipe. The inertia of this water column tends to maintain its velocity as the buoy moves downward after the passing of a wave crest. The check valve allows the water column to move only in an upward direction with respect to the buoy and upwelling pipe. This system pumps water when there is relative motion between the water column and the upwelling pipe. Two alternative buoy designs are being investigated. The first buoy was assumed to be cylindrical, the second buoy was based on a design proposed by Isaacs. These designs have the advantage of simplicity, but the design has the disadvantage of operating at the ocean surface and thus being subject to the stress from heavy seas.

---

[15] Little, T. E., J. D. Marks, and K. H. Wleeman. 1976. Deep water pipe, pump, and mooring study: Ocean thermal energy conversion program, p. 5–54. Westinghouse Electric Corp. Annapolis, Md. Contract No. (11–1)–2642.

[16] Hoffman, R. T., A. T. Strickland, and P. J. Harvey, 1976. Ocean food and energy farm project. Subtasks 4, p. 32. Vol. 2. July. Department of Energy (ERDA). Contract No. EY–76–A–03–1027.

FIGURE 21.—Wave pump with vane.

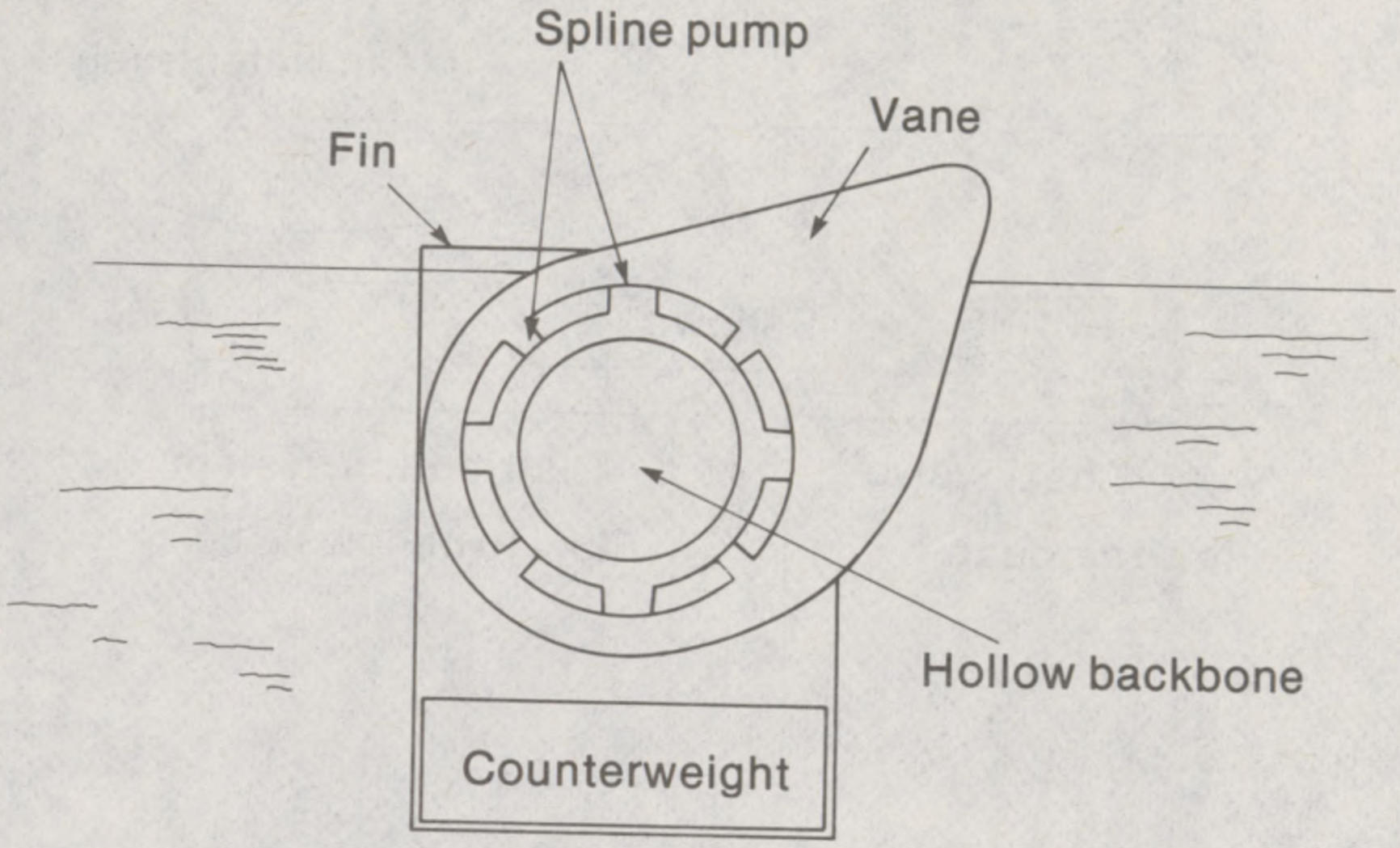

Source: ERDA

FIGURE 22.—Isaacs wave pump using a cylindrical buoy.

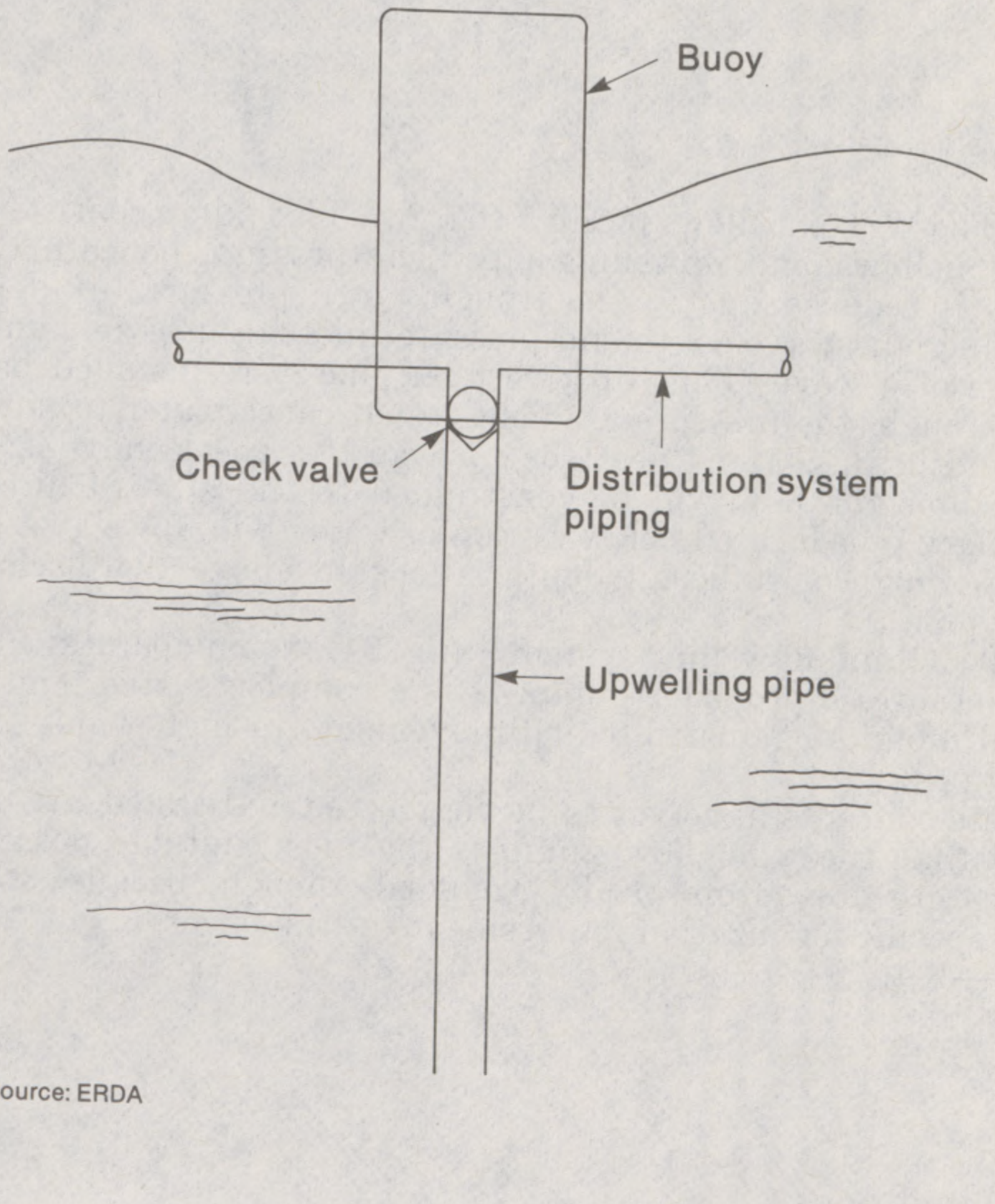

Source: ERDA

FIGURE 23.—Transverse section of a bellows pump.

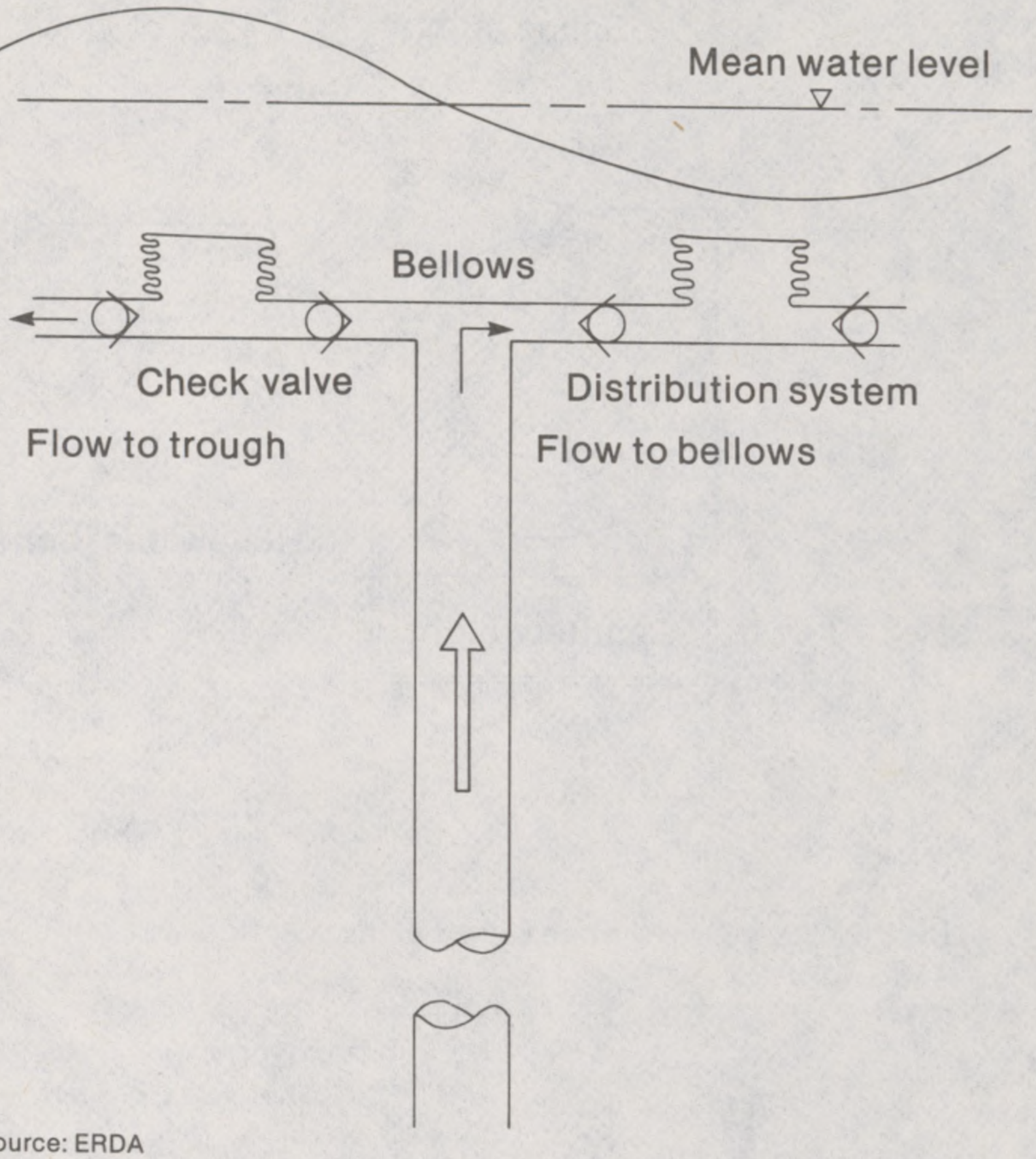

Source: ERDA

(3) The Wilcox bellows pump [17] (fig. 23). This pump consists of check valves, bellows, and upwelling pipe. The pressure beneath the wave trough is reduced due to the trough's own pressure. At depths approaching the wavelength, no pressure fluctuation is felt due to the passage of a wave. Thus, if a vertical pipe were installed beneath a wave trough, the pressure gradient would cause water to flow up the pipe and be discharged near the surface. If a check valve is installed in the pipe the flow will be constrained to the upward direction. A stationary pipe located below a train of waves will upwell water whenever a trough of sufficient depth is located above the discharge end of the pipe.

(4) Windmill upwelling system [18] (fig. 24). Wind operates a windmill that actuates a propeller pump. It is a complex system and requires special mounts against pitching movements in high winds and wave conditions.

These concepts have yet to be engineered and tested. At present it seems that the axial flow pump is the most suitable design. Other designs are not automatically excluded, though, because we do not know specific fertilization requirements of the farms.

---

[17] Ibid., p. 47.
[18] Ibid., p. 27.

Distribution, Dispersion, and Upwelling Systems

The movement of upwelled water after injection into the surface layer is a major concern in arriving at proper flow rates. The rate and geometry of spreading may have a large effect on the seaweed growth. The distribution system [19] designed for the biological test farm involves three distribution pipes. Some dispersion experiments were made using dyes. These experiments indicated that for water being upwelled at a rate of 48 liters per minute (180 gal/min) from a depth of 300 meters (1,000 ft), the sinking rate was about 2 cm/sec while the horizontal dispersion was roughly estimated at 33 cm/sec.

Figure 24.—Windmill upwelling system.

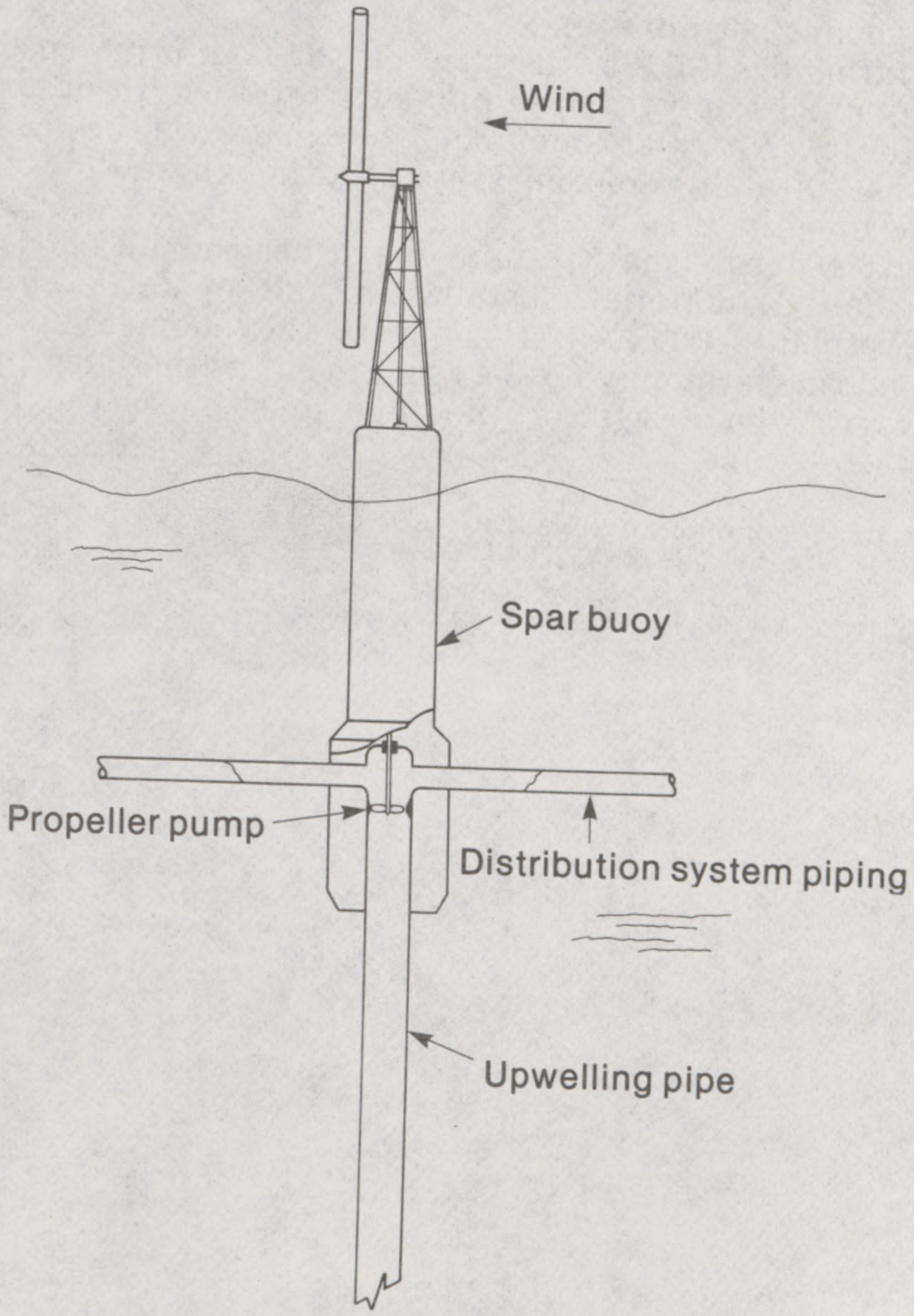

Source: ERDA

[19] Neushul, M., 1977. The domestication of the giant kelp, *Macrocystis* as a marine plant biomass producer. Presented at the symposium on marine biomass of the Pacific Northwest coast. Oregon State University. 3 March. 2.

The surface currents were 0.22 kn with calm sea conditions and light to variable winds. The surface temperature was 16° C (61° F) to a depth of 18 meters (60 ft), the upwelled water temperature was 9° C (48° F). Dye experiments have not been studied in currents greater than 0.25 knot.

Experimental work remains to be done in regard to distribution pipe designs and concepts including size of pipe, length of pipe, slope to the seawater surface and angle of the inclination.

An artificial upwelling system, where deep water is pumped through pipes into ponds, has been successfully installed and has been operating for some time in St. Croix. Three 1,800-meter (6,000 ft) long, 7.5 cm (3 inches) diametric, polyethylene pipes were installed from the shore to the sea. A glass-lined centrifugal pump on shore, driven by a 2-hp motor yielded a combined flow of 170 liters per minute (45 gallons per minute).[20]

The test farm (figs. 25, 26) installed off the California coast had a 0.63-meter (25 inch) polyethylene pipe of a total length of about 450 meters (1,500 ft). No great amount of data have yet been obtained regarding the suitability of the system, although it did survive a severe storm in early 1979.

In the past 10 years many studies have been made on deep cold water pipe design, material, installation and operation for ocean thermal powerplants (OTEC). It appears the engineering requirements for a marine farm may not be as stringent as those for an OTEC plant. However, the design of the pipe must meet the following requirements:

---

[20] Clendenning, K. A., 1971. Organic Productivity in Kelp Areas, pp. 259–263. In: W. J. North (ed.), The Biology of Giant Kelp Beds (*Macrocystis*) in California. Nova Hedwigia. 32.

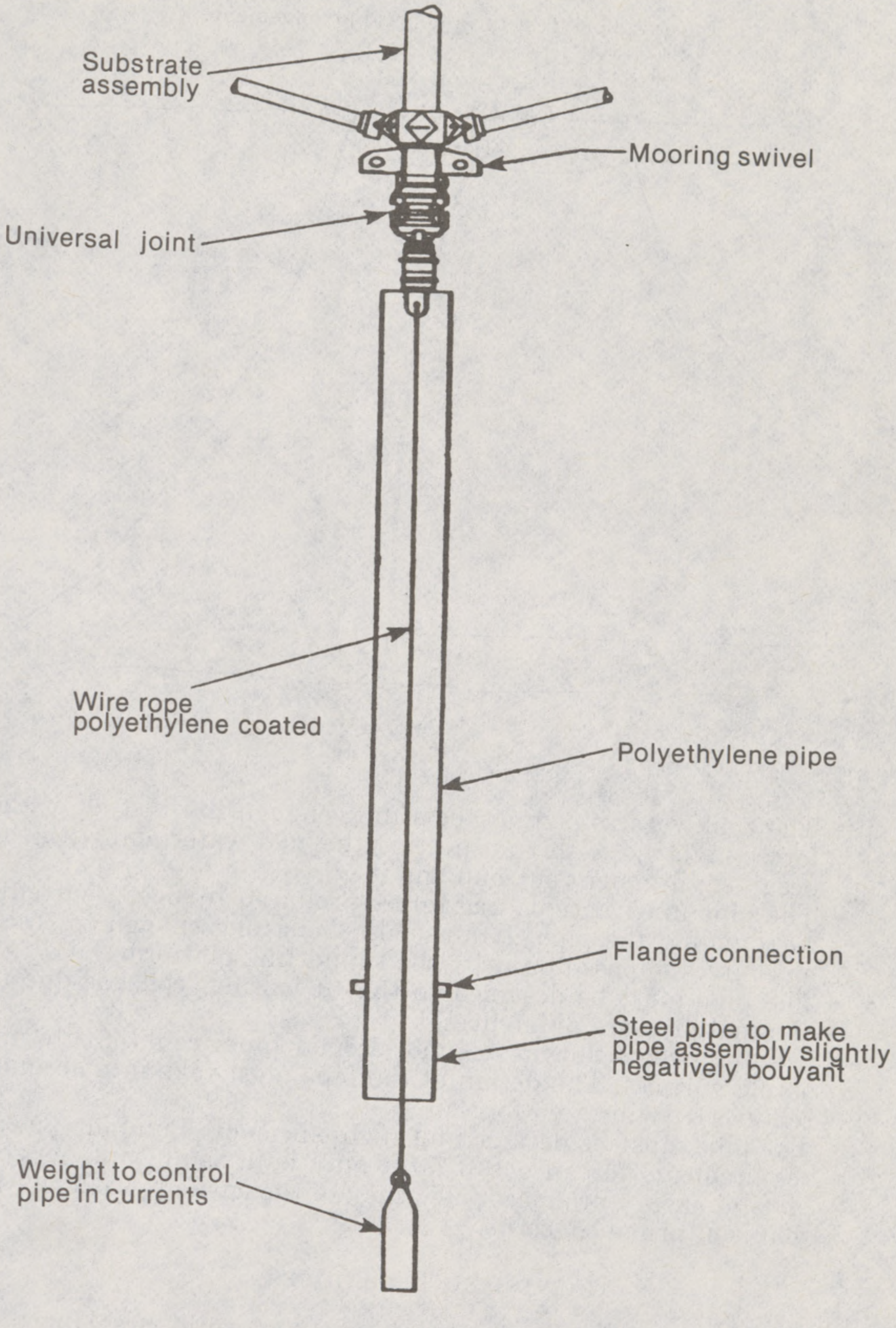

FIGURE 25.—Upwelling pipe.

FIGURE 26.—Test farm general arrangement.

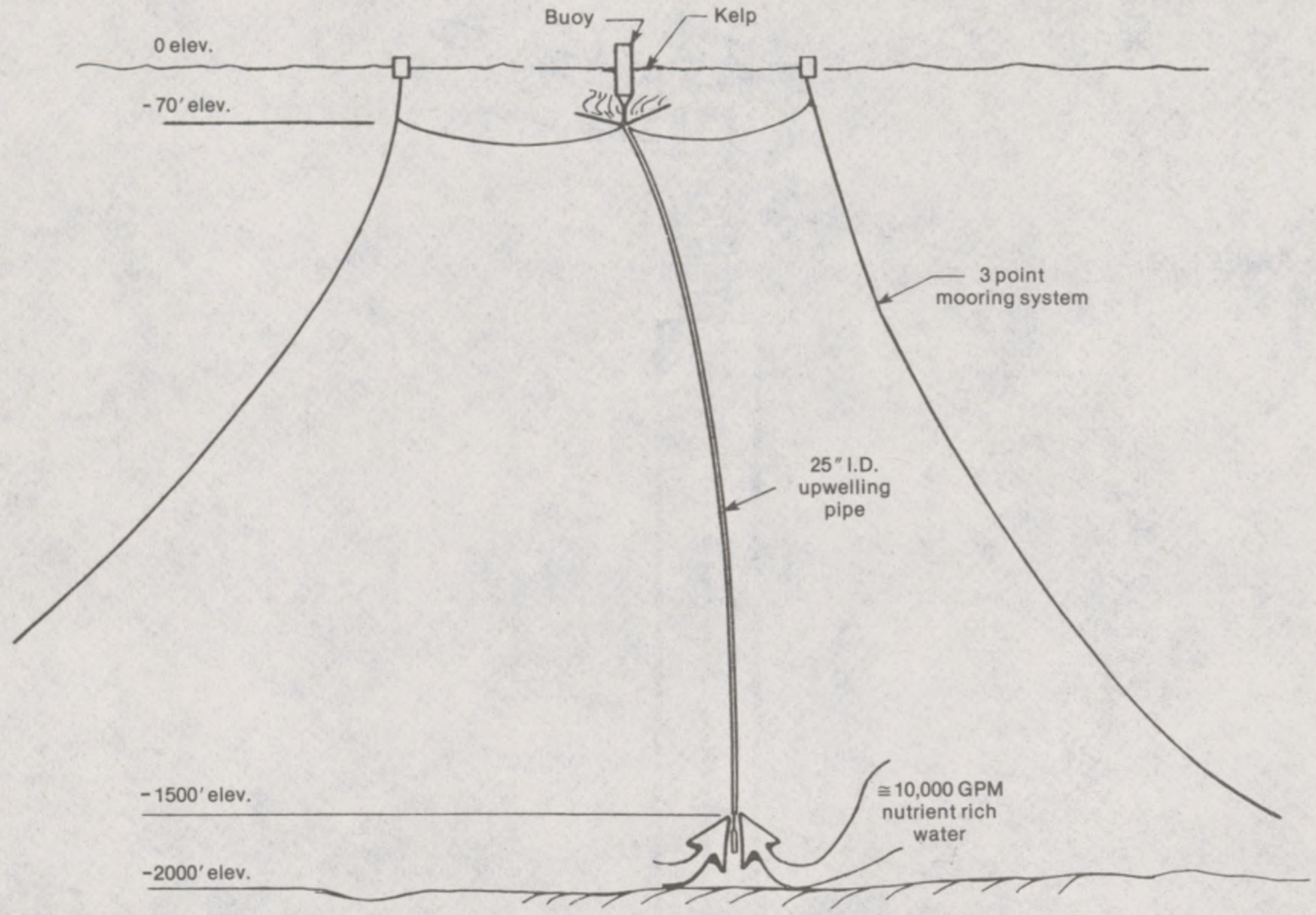

Source: GE Co.

- The cold water pipe must be strong enough to resist all of the forces involved with transporting the cold water and with the ocean environment surrounding it.
- The pipe must accept drag forces produced by ocean currents surrounding the pipe. It must also be strong enough to resist any forces imposed on it by the supporting platform.
- The pipe must be designed so that it will not collapse due to external pressure differences.
- Ocean currents flowing around circular pipes could create unstable vortices. The design of the pipe must take into account self-exerted vibration forces.
- The pipe must be designed for high efficiency. Pumping power requirements for an ocean farm may be a significant portion of total energy produced; efficiency of the entire upwelling system is of prime concern.

HARVESTING TECHNIQUES

Seaweed collection methods throughout the world are labor intensive. In Japan, *Porphyra* spores are released in large tanks of seawater into which mesh nets are rolled and dipped. The nets are than attached to poles in nutrient rich coastal waters, where the plants grow to maturity and are harvested by hand or by the use of small mowing machines. Such techniques are also used in northeastern China. In New England, Hawaii, and the Canadian Maritimes, seaweed is harvested by hand with special rakes or by rakelike dredges

that scour the algal beds. In the Philippines, when *Eucheuma* is harvested, branches are tossed into nearby bamboo rafts.

Occasionally storms wash large quantities of seaweed ashore where it is harvested by hand. These harvesting methods require excessive amounts of manual labor which would be uneconomical in the United States. In Europe, where the production of seaweed is an important industry, several experimental harvesting machines have been constructed. Most of them have turned out to be useless on open coasts, but one is being used successfully in Norway.[21]

On the U.S. west coast, Stauffer Chemical Co. and Kelco Co., major processors of algin, use mowing vessels to harvest the *Macrocystis* plant.

Kelco ships (figs. 27–28) harvest the kelp from beds leased from the State of California. The ships most obvious and important feature is the combination harvesting and conveyor apparatus spanning the snub bow. It contains horizontal and vertical sickle bars (fig. 29) similar to those used on a farmer's mowing machine.[22] The ships are also equipped with conveyors to bring the kelp aboard. Each boat cuts a swath about 20 meters (60 ft) wide, with the cutting device submerged 1.0–1.2 meters (3–4 ft). Other gear aboard keeps the oncoming kelp raked aft in the well of the ship.

FIGURE 27.—Kelp harvesting ship.

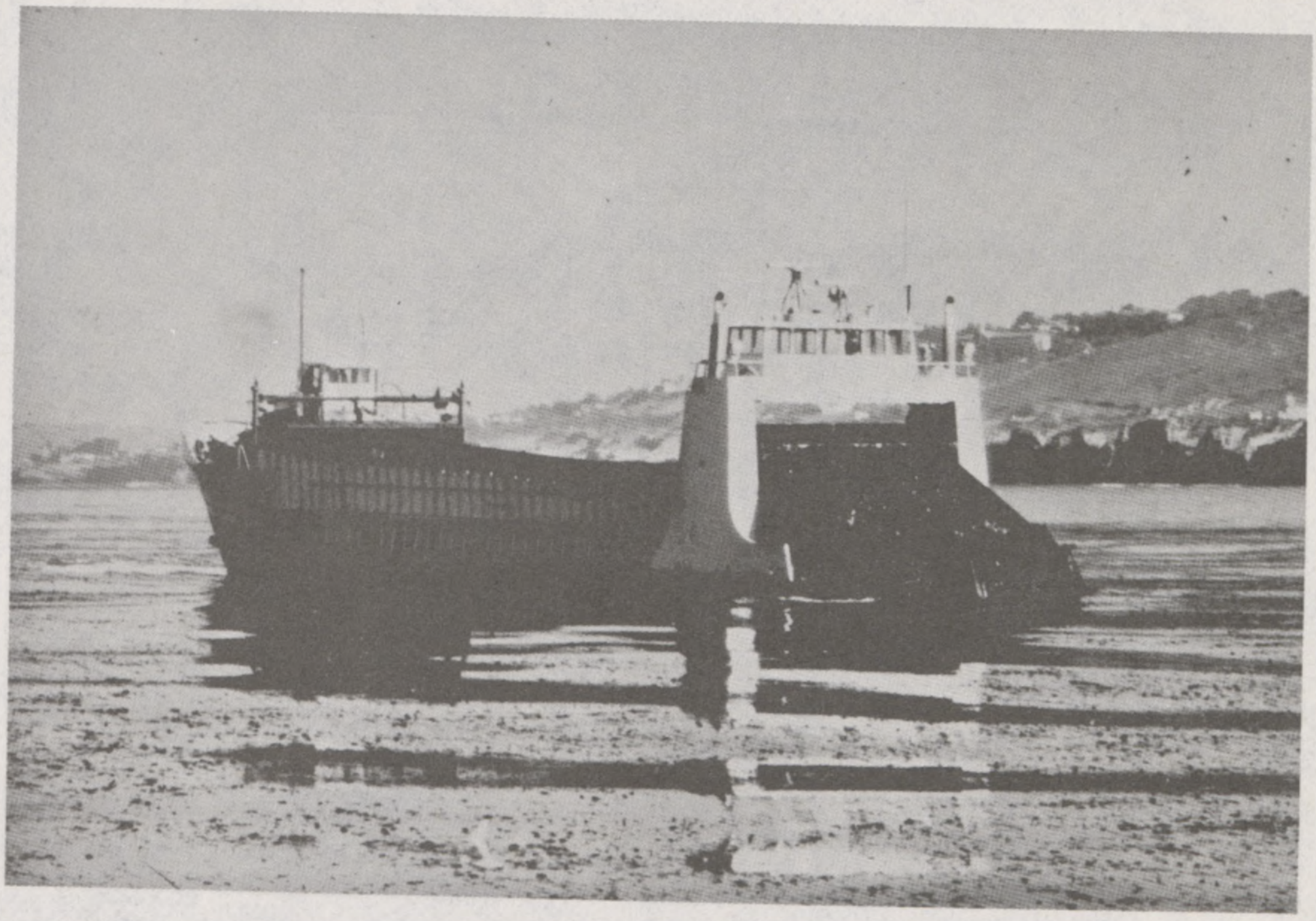

Source: KELCO Co.

[21] Levring, Tore. 1977. Potential yields of the European Marine Algae, p. 258. *In* Robert W. Krauss (ed.). The Marine Plant Biomass of the Pacific Northwest Coast, Oregon State University Press, Oregon.
[22] Cameron, F. K., 1915. Potash from kelp. U.S. Department of Agriculture. Report 100:1–22.

FIGURE 28.—The commercial farm will consist of many structural models, each capable of supporting kelp growth. Harvesting is mechanized and the kelp is processed aboard large ships. The farm also serves as an ideal site for mariculture of all kinds

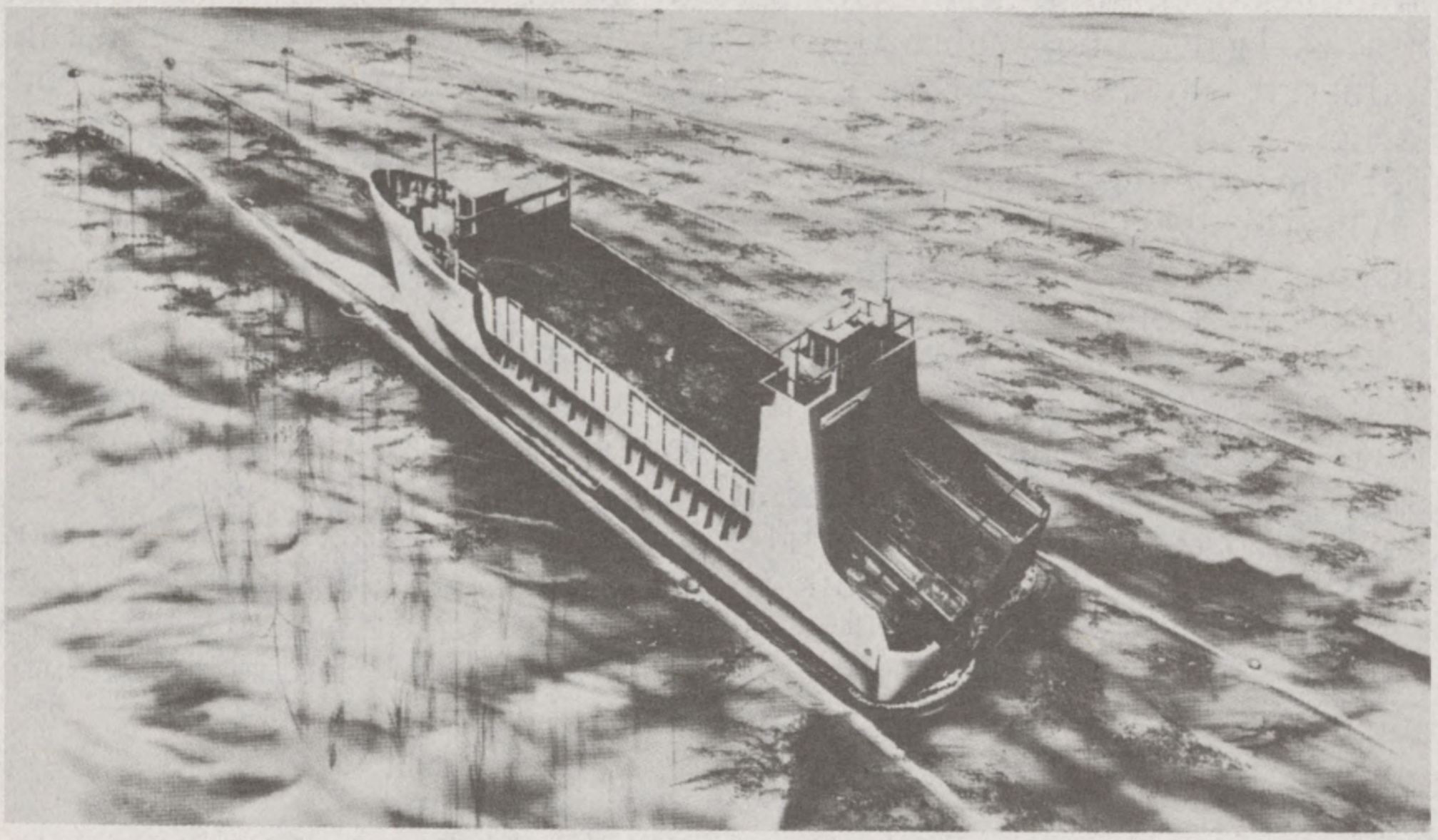

FIGURE 29.—Machine designed in 1900 to harvest kelp.

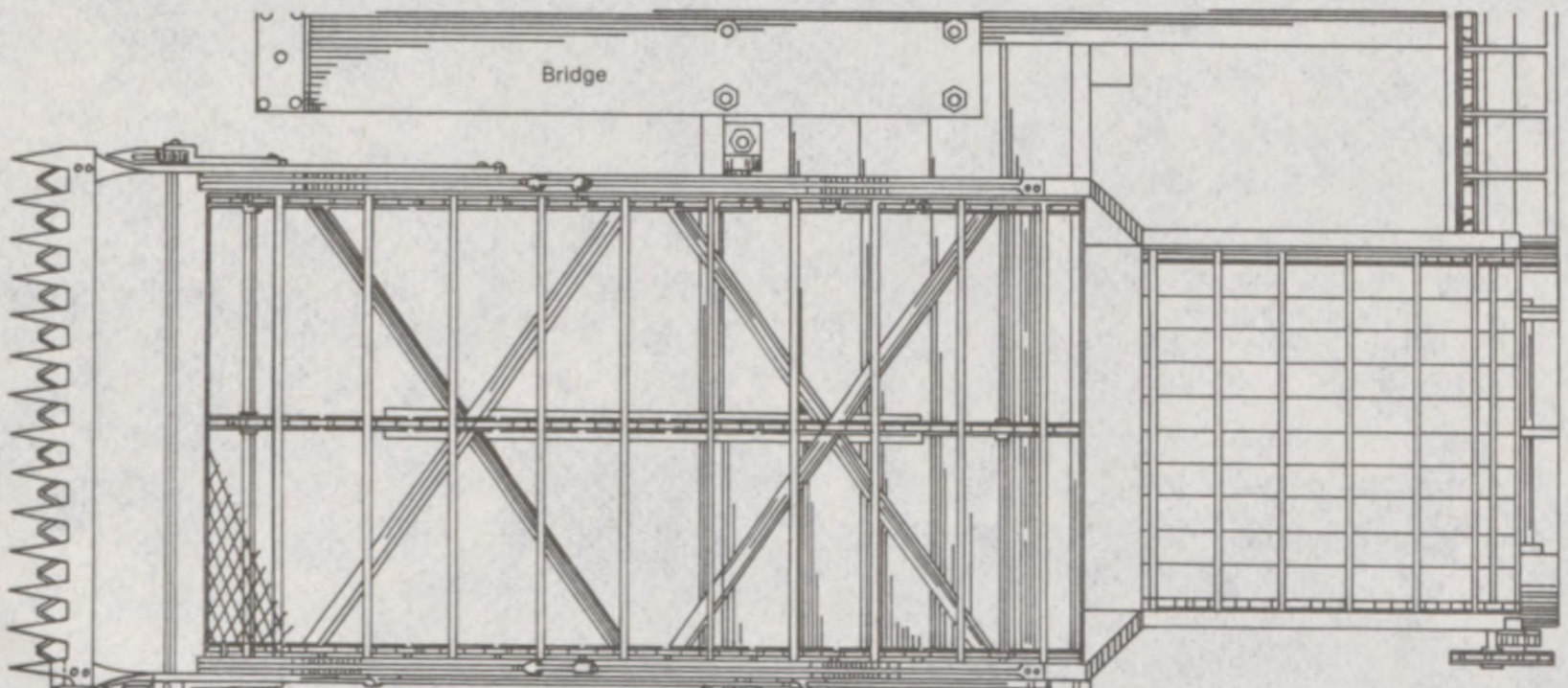

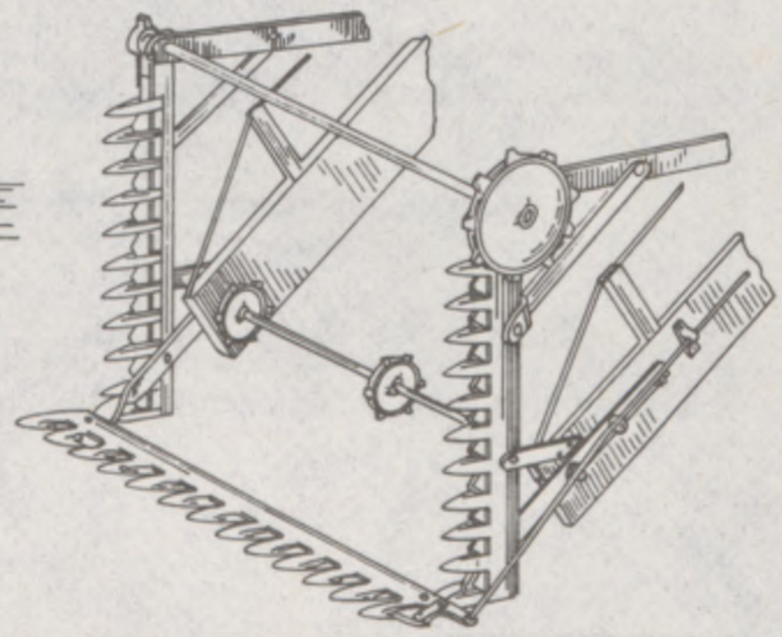

Perspective of cutting knives

Source: U.S. Dept. of Agriculture

GAS RESEARCH INSTITUTE (GRI) MARINE BIOMASS PROGRAM

The GRI was formed as a research arm of the gas industry in 1976 and supports research into alternative future sources of natural gas. The main focus of its marine biomass program is research into the production of kelp to be anaerobically digested to produce natural gas. This program involves the previously mentioned one–eighth-acre-deep ocean biological test farm where 100 adult *Macrocystis pyrifera* were cultivated. Funding for the marine biomass program comes from DOE and GRI, with total grants (through fiscal year 1979) of almost $9.3 million.[1]

NOTE.—The future of this latest test farm effort is uncertain. Installed and fitted out with kelp plants, by December 1978, the operation was shut down the following month. A severe storm carried away essential parts of the system which, in turn, caused the plants to become cut and tangled. All of the original 100 kelp plants were destroyed. As of spring 1979, researchers were awaiting funding before starting up the project again.

The following is a description of what had been hoped of the project and what may again be attempted if additional grant money is allocated for the project.

---

[1] Ward, Roscoe. Department of Energy, personal communication.

FIGURE 30.—Wilcox farm design, upwelling umbrella-type farm 1,000-acre ocean food and energy farm unit.

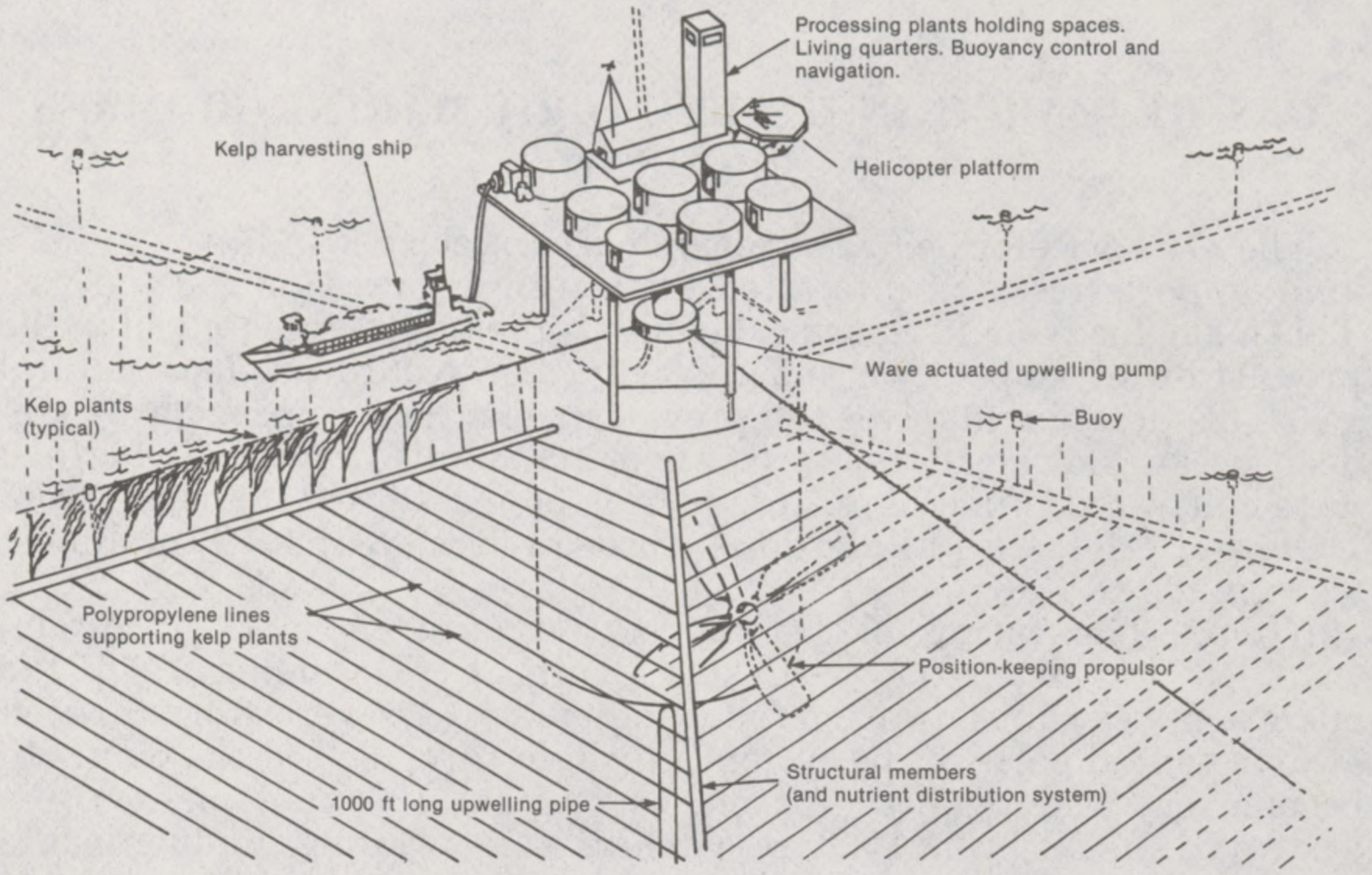

Source: Howard A. Wilcox

HISTORY

The prototype for the GRI marine biomass program was begun by Dr. Harold Wilcox at the Naval Undersea Center (NUC) in San Diego in 1972 (fig. 30). Wilcox directed the research program at NUC for 4 years, with American Gas Association (AGA), Navy, and ERDA funding of approximately $2 million. The work provided underpinnings for plans to grow giant California kelp on moored structures in the open ocean using upwelled deep water as fertilizer. These researchers were responsible for the selection of *Macrocystis* as the most appropriate biomass material, and for initial experiments on kelp cultivation using an artificial structure.

In 1974, Wilcox installed three test farms. The operations did not include artificial upwelling of deep-ocean water. The first, 7 acres in size, was placed in open ocean conditions about 1,000 meters (9,000 ft) off the northeastern tip of San Clemente Island, Calif., in 100 meters (300 ft) of water. About 100 *Macrocystis pyrifera* plants were taken from nearby natural beds and attached to the farm which was suspended approximately 10 meters below the ocean surface.[2] The plan was to observe this farm over 2 years; however, after 1 year, an anchor at one corner of the submerged grid came loose and the farm floated to the surface. A passing ship presumably tore the farm to pieces the next day,[3] although the destruction might have been due to wave action.[4]

---

[2] Wilcox, Howard A., 1975. "The Ocean Food and Energy Project," p. 11. In "Man and the Oceans, Proceedings of the International Conference on Marine Technology Assessment, Monaco."
[3] "Sea Farm Experiment Under Fire, 1976." San Diego Union. August 28.
[4] Ehorn, William E., Channel Islands National Monument, personal communication.

Some information was collected from this first operation. For example, preliminary results indicated that fish grazing pressures were low on the farm compared to those in natural beds nearby. Also, the natural nutrient levels in the ambient water were rather low, so both the natural beds and the farm showed relatively low growth rates.[5]

Two smaller, subsequent farms lasted shorter times. It is hypothesized that one, located near Corona del Mar, sunk when a float failed. The third farm, off Catalina Island, was destroyed by waves in less than a month.[6]

Wilcox did one open ocean experiment involving artificial upwelling of deep ocean water. In the experiment, water was pumped from a depth of approximately 350 meters (1,150 ft) through a long pipe and fed to a single plant encased in a cone-shaped structure. The Navy barge towing the cone collided with and damaged it. Leaks later appeared in the pipe. Windstorms and the chafing of the plant against the cone tore off the new blades, preventing accurate measurement of the plant's growth rate.[7]

Following these problems, the project under NUC management was discontinued. The AGA selected a new contractor, GE, which subcontracted with Global Marine Development, Inc., and others to continue work with a structure designed but not tested by NUC.[8]

Present and Future

GRI in cooperation with DOE, funded the deployment of the above-mentioned biological test farm. It is located 5 miles from shore in 600 meters of water off the coast of southern California (Newport Beach) (fig. 31). The farm is set between the Channel Islands and the coast, permitting the islands to serve as a slight buffer against the force of open ocean waves. Adult kelp plants (*Macrocystis pyrifera.* were transplanted from their natural environment close to shore and attached to the subsurface grid 18 to 24 meters (60 to 80 ft) below the surface. Nutrients were provided from artificial upwelling of ocean water beneath the farm.[9] Other information on farm design is presented in chapter V of this report.

---

[5] Wilcox, "Ocean Food and Energy," p. 11.
[6] "Sea Farm Experiment."
[7] North, J., and R. Grace, 1977. "Engineering of Structures in the Ocean," p. 344. In Robert W. Krauss (ed.), "The Marine Plant Biomass of the Pacific Northwest Coast." Oregon State University Press, Oregon.
[8] Ibid.
[9] Flowers, Ab and A. J. Bryce, 1977. "Energy From Marine Biomass." Sea Technology. October.

FIGURE 31.—Test growing sites depth contours at 300 and 1,200 feet.

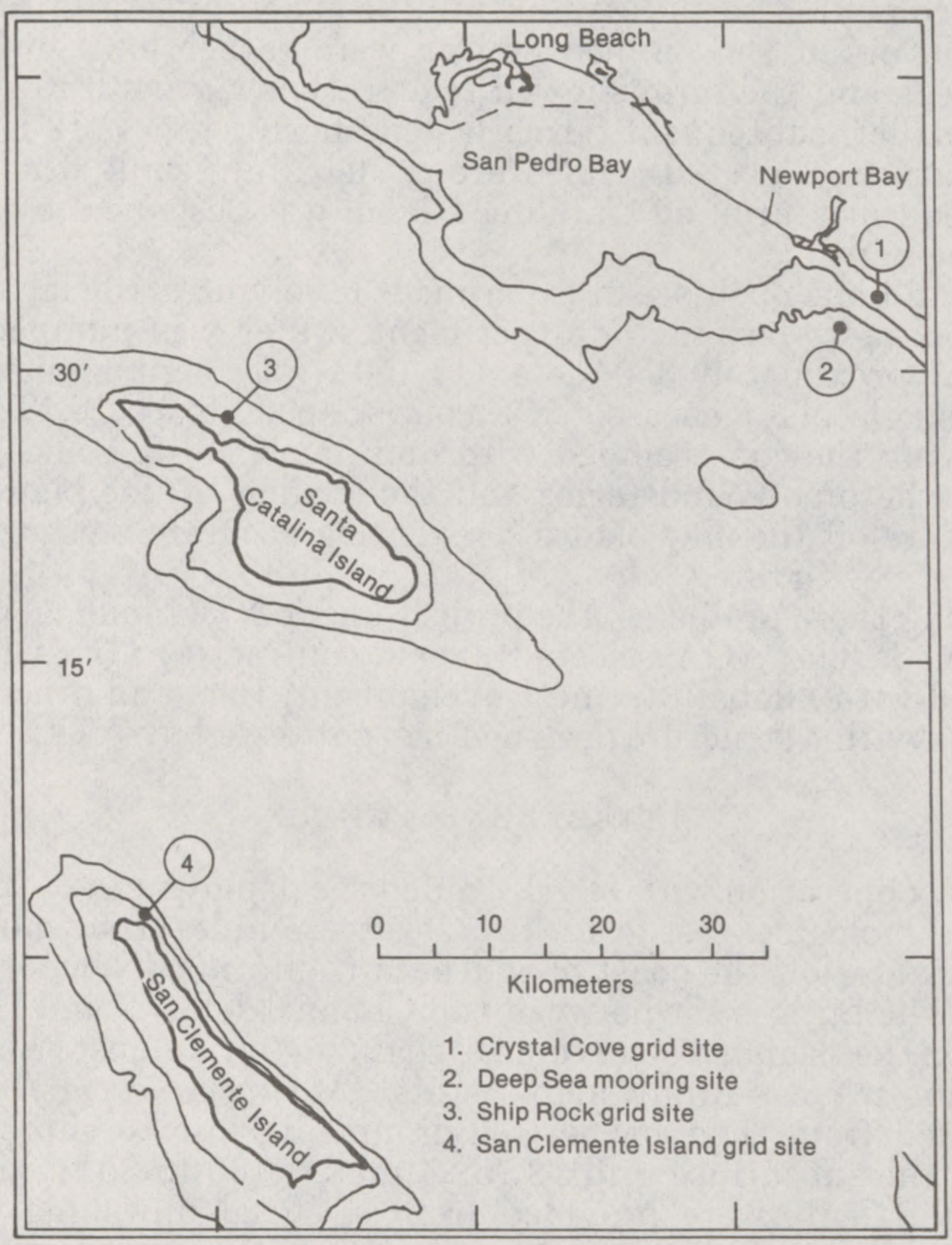

Source: GE Co.

FIGURE 32.—The quarter-acre demonstration farm consists of an umbrella-like artificial structure suspended at 60-foot depth. Nutrients are pumped from below the farm to support the kelp growth.



Source: GE Co.

FIGURE 33.—Test farm plan view.

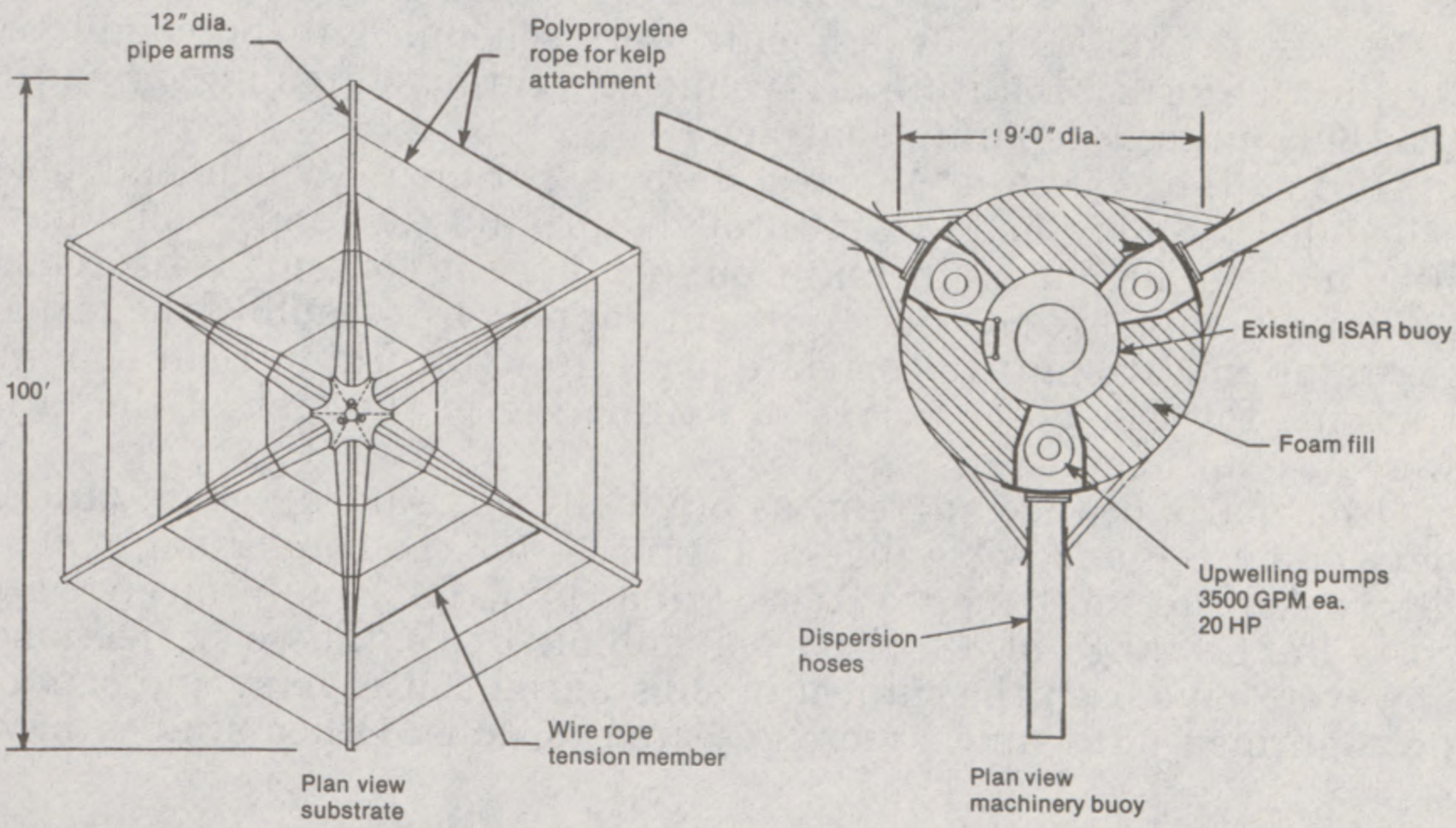

Source: GE Co.

FIGURE 34.—Test farm detail profile.

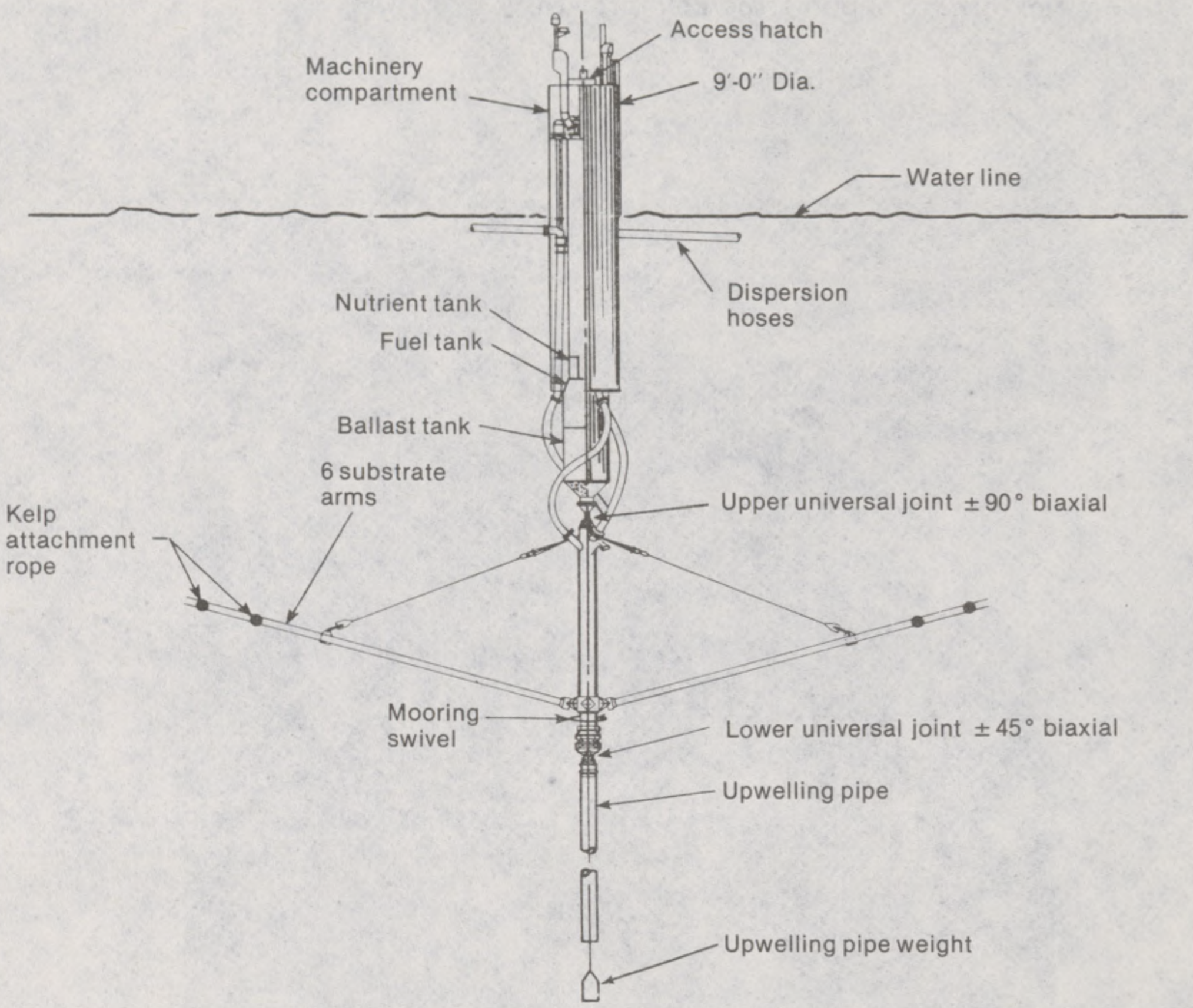

Source: GE Co.

The biological test farm was constructed as an experimental station to conduct kelp yield experiments with upwelled water on 100 adult kelp plants. Its design was complete and construction was started in May 1978. The test farm (figs. 32–34) was installed in December 1978, as stated. Yield experiments were scheduled to be conducted by the California Institute of Technology through funding provided by DOE under a separate contract.

During the course of the test farm experiment, which had been scheduled to continue at least through 1979, observations would have been made of kelp mass increase and plant tissue content. Researchers had also planned to measure nutrient content by sampling the farm's seawater and attempt to correlate plant growth with nutrient concentrations. Further observations of marine life in the area of the farm were also anticipated.

Other parts of the program, as originally envisioned, would aim at developing the anaerobic digestion process for the conversion of harvested kelp to methane. System studies by GRI have projected gas costs in the range of $3 to $6 per million Btu's. These projections, however, have been the subject of substantial controversy and cannot be confirmed until much more research is done. Other studies have

pointed up the need for additional work in the ocean engineering area to develop prototype farm concepts and collect oceanographic and engineering data on large-scale farms. GRI has also developed a program plan leading to the demonstration of commercial-size farm and process units.

The following is taken from GRI's program description prepared in mid-1978 and updated in December by Ab Flowers, director, gas supply, Gas Research Institute:

The design, construction, and deployment of several engineering test farm configurations are planned to take place. The system configurations to be evaluated will vary in geometry, details of structure, materials of construction, and methods of positioning or mooring. The concurrent evaluation of several different system configurations offers the advantages of significantly shortening the time required for evaluation of candidate systems, allowing simultaneous acquisition of capital and operating cost data for a variety of configurations, and providing redundancy for continuation of system evaluation in the event of inadvertent loss of a single unit. The above work is expected to provide substantial quantitative data to support major decisions regarding the appropriateness of proceeding with feasibility demonstrations as planned, possible alterations in the approach or the abandonment of the overall concept. In addition to the evaluation of kelp farm systems, the study of kelp growth on artificial structures will be extended by the engineering test farm experiments into large-scale and long-term demonstrations of practically attainable kelp yields. Current plans call for proceeding with the design and development of commercial prototype farm modules in the 1,000-acre range. These farm modules would be representative of full-scale commercial system components.

"In concert with the major tasks described above, work will be conducted in the areas of:

- Kelp genetic improvements to enhance growth and survival.
- Development of kelp planting, nutrition, and harvesting strategies that are applicable to commercial-sized systems.
- Coculture of other candidate seaweeds.
- Continued optimization of the anaerobic conversion process for enhancement of yields through pretreatment processing, inoculum development and process engineering."

There are several criticisms of the GRI marine biomass program. Some people believe that the open ocean test farm is inappropriate at this time; perhaps a premature step in a long, logical process of developing future deep sea farming operations. Another widely held view is that too much money has been spent to generate too little data. Critics say more information is needed on:

- Kelp growth and productivity and limiting factors in natural and artificial beds.
- Plant diseases, effects of large monoculture farms, grazing, and water movement and quality.
- The possibility of developing shallow water kelp either in areas of natural upwelling or in conjunction with other fertilizing techniques in lieu of open ocean farms.
- Ability of large farms to withstand ocean weather.
- Fuel production from kelp.
- Net energy balance from producing fuel from kelp.

Critics also contend that alternative forms of fertilization are not being considered. There are ample funds planned for construction of several different designs of biological test farms, but no plans for alternative methods of fertilization besides upwelling seawater in pipes. Alternative methods could include employment of algae process waste, nitrogen from nitrogen-fixing organisms, or for several nutrients, direct introduction from commercial sources.[10] Work by Wheeler North has shown that kelp require specific micronutrients for optimal growth, and it has not been shown that deep sea water has these nutrients. Consequently, some people are concerned that kelp productivity will be low, and the concept of open ocean seaweed farms labeled a failure because an unsuccessful fertilization method was used.

FIGURE 35.—Energy from marine biomass program participants.

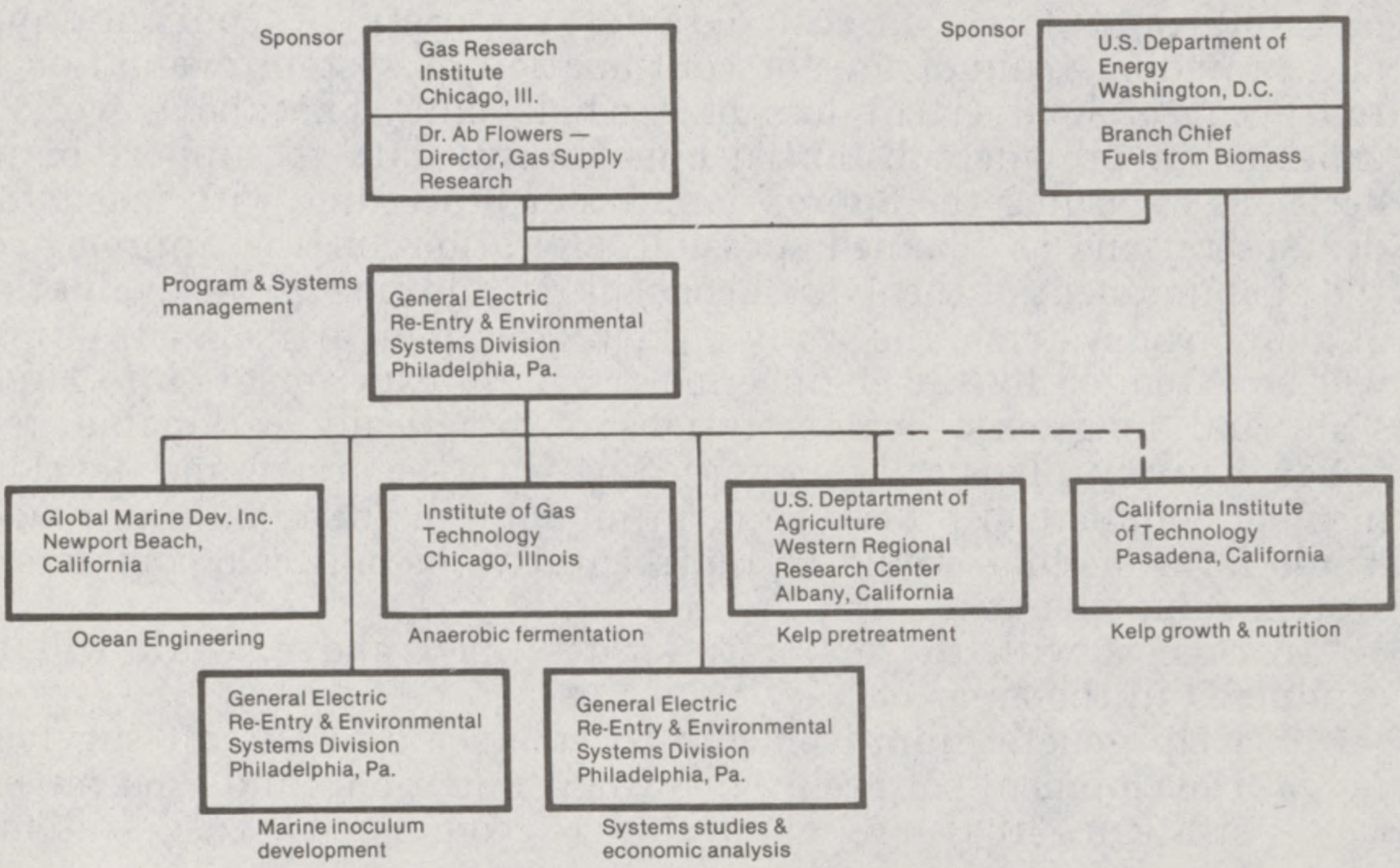

Source: GE Co.

BUDGET

The GRI marine biomass program (fig. 35) is funded jointly by DOE and GRI. In fiscal year 1978, DOE provided $1.2 million and the GRI contributed $1.1 million for GE's work on the biological test farm. The source of GRI funding is the American natural gas consumer. An annual charge of 15 cents per year on each consuming household in 1978 grossed $9.5 million for GRI programs. The charge in 1983 is scheduled to be raised to $1.25 per household.[11] The DOE also funded Wheeler North at the California Institute of Technology

---

[10] Hall, Edward. Chromally Ocean Resources Co., personal communication.
[11] Flowers, Ab, 1978. Statement before the House of Representatives Committee on Merchant Marine and Fisheries, Subcommittee on Oceanography, p. 18. Committee report serial No. 95–45. June 7.

in fiscal year 1978 with $884,000 to conduct yield experiments. In sharp contrast, DOE funded only $499,000 for research on all other forms of aquatic biomass in fiscal year 1978. The total funding from fiscal year 1974 through fiscal year 1979 for the GRI marine biomass program is $9.3 million, with $5.4 million from DOE and $3.9 million from GRI.[12] (See table A.)

As noted before, a major criticism of the GRI program is that the quantity of data produced may not justify the amounts expended. For instance, many persons feel that a minimum level of productivity such as at least 500 wet metric tons per hectare per year (200 tons/acre/year) [13] should be demonstrated before further experimental work is funded.

Another major concern is the lack of sufficient data obtained on kelp nutrient requirements. Since the entire effort to date has been to determine growth and productivity potential for future ocean kelp farms, it seems reasonable at this stage to evaluate what has been learned. It has been suggested that GRI prepare a full report and analysis of its research to date on kelp so that other experts, the Federal agencies and Congress can better evaluate the status and potential of this renewable source.

TABLE A.—MARINE BIOMASS PROGRAM, PAST AND CURRENT BUDGETS

[Funding in thousands of dollars]

Fiscal year	Principal contractors-managers				Funding from—
	Navy	GE	Cal. Tech.	Others	
1974			110		ERDA
1975	250		200	100	ERDA
1975	200				AGA
1976			325	225	ERDA
1976	200				AGA
1977			578	446	ERDA
1977		400			AGA
1978		1,200	884	499	DOE
1978		1,100			GRI
1979			745		DOE
1979		2,000			GRI
Subtotal	650	4,700	2,842	1,270	
Total		9,462			

Note: These figures exclude methane conversion experiments. Data was obtained from Mr. Roscoe Ward of DOE Biomass Program Office.

[12] Ward, personal communication.
[13] Oswald, William. University of California, personal communication.

ENERGY AND ECONOMICS

Energy Projections From Kelp Farms

Assuming optimum growing conditions can be achieved in an open-ocean farm and maximum production can be achieved, what is the potential impact on U.S. fuel production?

Estimates can be developed from growth and productivity data previously presented and analyzed. The following discussion is intended to provide a rough selection of estimates of future ocean farm energy production rates derived from observations of natural kelp beds, experiments with cultivation and rough calculations for hypothetical farms. Here is a summary of some of these estimates.

SEAWEED PRODUCTIVITY ESTIMATES GROSS PRODUCTION PER HECTARE PER YEAR

Basis	Dry metric tons	Dry ash-free tons
Average of all California kelp harvest records	1	0.6
1975 average harvest of Goleta Bay kelp bed	3	2
Measurements of Monterey kelp bed	28	18
Calculation of hypothetical farm from assumptions of standing crop and growth rate (range from low to high)	22–100	14–65
Projection made by E. Hall [1]	56	36
Range proposed in GRI marine biomass project [2]	86–362	56–235
Range used in Dynatech analysis of [3] aquatic biomass systems	3–170	2–110

[1] Hall, Edward, Chromally Ocean Resources Co., personal communication.
[2] General Electric Co., 1978, energy from marine biomass project, program review.
[3] Dynatech R/D Co., 1978, cost analysis of aquatic biomass systems, prepared for the U.S. Department of Energy, July 25, contract No. HCP/ET–400–78/1.

Notes: 1. Numbers have been rounded and converted to metric measurements for ease of comparison. 2. Dry weight times 0.65 equal dry, ash free (DAF) weight factor used for kelp. 3. The 1st 4 estimates were developed from data in chapter IV of this report).

The above figures can also be converted to energy production estimates with some additional assumptions about the extent of farming possible, along with conversion efficiencies. Using the hypothetical farm calculation range of 14 to 65 DAF tons per hectare, an energy content of 8,000 Btu/lb (DAF) solids, and a 70-percent digester conversion efficiency,[1] the following values can be calculated:

Production—DAF tons/hectare/year	14–65
Gross energy—10^6 Btu/hectare/year	246–1,144
Gross energy—After conversion to methane (with 70 percent eff. conv.) 10^6 Btu/hectare/year	172–800
Annual quads—10^{15} Btu for 400,000 hectares (1 million acres) hypothetical farm	0.07–0.32
Gross average annual quads	0.2

These estimates have been rounded for convenience and are only indications of what might be possible in the future.

One conclusion from the above exercise is that it may be possible in the future to gross about 0.2 quad of energy from ocean farms of

[1] Ashare, Edward. Dynatech R&D Co., personal communication.

about 400,000 hectares (1 million acres). (R. H. Bogan reached a similar conclusion in August 1976 in a paper he presented at a Solar Energy Conference.) It should be noted, however, that there is no clear consensus among researchers that this can be done. And, as previous productivity estimates show, the range of uncertainty is at least from one-tenth to more than 10 times a given estimate.

It is also noted by some that lengthy analyses of hypothetical yields are not crucial to proving the feasibility of ocean farming. Benemann [2] states:

> If it (ocean farming) works in an economically competitive sense, we will have, at least, several quads; if not, we will likely produce negligible amounts of seaweed power. This is the key point of the ocean farm (for energy) project—an all or nothing gamble. The comment that the land option would also require about twice as much acreage on a quad basis is dubious and misses a point: ocean farms are not limited by acreage. Any yield is actually acceptable, as long as unit costs are minimized. This is not true on land where land costs are a major factor in energy farming. Also, harvesting distances are not key problems with ocean farming. Thus, the argument of whether 2 or 62 tons per acre per year are possible is not as crucial as how much nutrients are required or lost. Of course, productivity is a key factor, as any structure will cost money. Of course, this structure, and other inputs, may also be a function of yield, which thus, should not be maximized but optimized against such factors.

Net Energy and Economics

This report does not contain adequate data or analyses which could be used to project net energy figures or economics of future large ocean farms. Substantial work has been done by researchers using their own hypothetical assumptions. It is useful to compare the conclusions. The following response to a draft of this report was written by E. Ashare of Dynatech R/D Co.[3]

Net Energy Balance

There is one aspect of any energy production or conversion system which should be explicitly detailed and which is not included in the draft report, namely, the energy balance. It is essential to summarize the energy requirements for production and/or conversion which can then be utilized to determine the net energy output for the system. For the energy from seaweed system, there are major energy requirements for nutrient supply, harvesting, and conversion to methane. These energy requirements are presented in the report, but in various sections of the report. The energy requirements are given for harvesting (transportation) and nutrient supply (upwelling) as 8 percent and 35 percent respectively. It is indicated that 70 percent of the theoretically obtainable yield can be obtained by conversion of the

---

[2] Benemann, John. University of California, personal communication.
[3] Ashare, personal communication.

algae to methane via anaerobic digestion. However, this 70-percent efficiency does not include energy requirements for operation of the digester, scrubbing CO_2 from the gas, and compression of the gas to pipeline conditions.

The table below presents the summary of the energy balance for the energy from seaweed process. This energy balance indicates that the net energy is only a small fraction of the crop energy content. It should be noted that another energy requirement should be included in the energy balance, namely, the energy associated with production of the materials of construction, amortized over the life expectancy of the equipment. Another factor to be considered is that the energy balance developed in the table was established for optimistic conditions of operation. When these two factors are considered, it is very unlikely that a positive energy balance will result.

In order to make the energy from seaweed systems feasible on a net energy basis, it would be best to direct any research effort at the area (or areas) which is a major contributor to the energy requirement. This would be the area of nutrient supply. (Note that any research effort resulting in improved per acre yield would also result in a corresponding increase in energy requirement for nutrient supply, thus, not improving the energy balance.)

Energy Balance (Energy from Seaweed Process)

	Energy requirement (percent of crop energy)
Nutrient supply (upwelling)	35
Harvesting (transportation)	8
70 percent conversion to methane	30
Conversion process (energy requirement) [1]	14
Total energy requirement	88
Net energy production	12

[1] Assumes 20 percent of methane energy output is required for processing, so 14 percent of input is required, assuming 70 percent conversions.

Source: Calculations by E. Ashare, Dynatech R/D Corp.

Dynatech has prepared an energy balance table for hypothetical ocean farms with a wide range of productivities. They concluded that net energy could vary from a net loss to about 70 percent of crop energy.[4] It should be noted that net energy was calculated before conversion to methane and without any factors of efficiency for kelp to methane conversion.

Naturally all of these ocean farm assumptions are based upon estimates of capital costs, operating cost estimates and fuel requirements, and for operations such as upwelling and harvesting. Since no clearly best design of an ocean farm system is available, these assumptions vary widely. For example, the possibility (or lack of it) of wave-powered pumps to be used for upwelling nutrients has a large effect on energy consumption. It appears that much more biological data on seaweed cultivation is needed before any design could be developed for the purpose of accurately estimating costs. However, cost estimates have been made using these widely varying assumptions.

[4] Dynatech, "Biomass," p. 155.

Two estimates which represent optimistic and pessimistic views are those of GRI and those by Dynatech, respectively. System studies by GRI have projected gas costs from ocean farms in the range of $3 to $6 per million Btu's.[5] Dynatech, on the other hand, prepared an analysis which showed net energy costs to range from $7 per million Btu's up to several hundreds of dollars per million Btu's for very low productivity rates and "reasonable design assumptions" [6] (this also excludes conversion costs). Proponents of ocean farming systems have disputed the Dynatech analysis but it appears that, until more experimental data is obtained, the assumptions can be disputed, but not proven.

Estimates (by Dynatech and GRI) of capital costs of a large ocean farm vary by factors of two to three times. Dynatech calculations indicate that capital costs for a very high yield 400,000 hectare (1 million acre) ocean farm would be $20 billion. However, GRI's capital cost estimate is $7 billion for roughly the same type and size operation. Of course, this is based only on hypothetical components. The important differences in assumptions that lead to wide variations of costs are those related to plant productivity, nutrient requirements (and thus upwelling energy needed), and farm installation costs. It is clear that much more research is necessary if costs are to be projected with any confidence. In addition, other farm design concepts should probably be considered and analyzed.

Two comments from researchers on cost are useful:

> In a letter to OTA commenting on a draft of this report, R. Fay, a biologist and fisherman, urged caution when:
>
> > Comparing the value of dry kelp to produce gas at about $0.05 per pound versus the value of alginates from the same resource at about $1 per pound without the expense of building and maintaining the farm, maintaining the upwelling, adapting new methods of harvesting, setting up the fermentation apparatus, and developing the experience and expertise to operate the enterprise. The cost factors seem to favor expanding the production of *Macrocystis* to produce alginates from kelp harvested on natural grounds by a large margin.
>
> Also:
>
> > "Once the net energy yield approaches less than 50 percent, one might imagine serious problems in capitalization, management, and meeting a profit balance.[7]

In addition, E. Hall, a chemist and businessman, offers this comment:

> It is extremely questionable whether any of the designs discussed are viable for the immense areas of sea required for significant contribution to the Nation's energy. Far more subtle engineering designs will be required. Very few construction

---

[5] Flowers, Ab. Gas Research Institute, personal communication.
[6] Dynatech, "Biomass," pp. 157–159.
[7] Fay, Rimmon. Pacific Bio-marine Labs. Inc., personal communication.

materials can satisfy the need for millions of tons at reasonable cost, adequate structural quality, and acceptable life. This was discussed at great length in a proposal submitted to the Department of Energy years ago.[8]

Also, botanist J. R. Waaland concludes:

> Considering the present state of the art in seaweed cultivation, a crucial question which really can't be answered until more practical sea trials have been conducted and some experience and data are accumulated is the net energy output of massive, open ocean, fuels from seaweed biomass farms. This kind of analysis is described in general terms in Odum and Odum, "Energy Basis for Man and Nature" (1976). Before such an analysis can be performed, realistic seaweed growth data, a practical artificial substrate module of known longevity, and a suitable end product processing procedure for generation of methane or alcohol must be worked out.[9]

---

[8] Hall, personal communication.
[9] Waaland, J. R. University of Washington, personal communication.

ENVIRONMENTAL IMPACTS OF NATURAL AND OPEN OCEAN KELP FARMS

It will be necessary to carefully analyze the environmental effects of any large ocean farm very early in its development. At present no specific design at a specific location has been proposed, so detailed analyses are not possible. However, there are several known or hypothesized effects of natural and open ocean kelp farms. These include: wave and weather changes; additional pollution; altering fish, bird and plant populations; and future conflicts with competing ocean users.

Wave and Weather Changes

Large (at least 400 hectares/1,000 acres) open ocean kelp farms will reduce water circulation, damp wind-generated waves and possibly slow ocean currents. If 250,000 hectares were farmed, some specialists are concerned that these three effects in combination may alter prevailing weather patterns. Also, the reduced water circulation could hamper an effective distribution of the upwelled water which may be used for fertilizer.

Nearshore kelp farms might damp out incoming waves and reduce water movement along the shore.[1] The farms will become sediment traps, which may make it difficult for kelp which need to place their holdfasts on substrate in sediment-free areas. The reduction of water movement might also slow the dispersal of freshwater coming from land and reduce the salinity in the vicinity of the farms.[2] The cumulative effect of the farms—assuming they act as sediment traps, reduce salinity and produce large amounts of organic compounds—would be to significantly alter the environment.

Large fog banks are created in natural upwelling regions and similar results might occur in areas of artificial upwelling. Fog banks are a navigation hazard. Further, they can reduce the sunlight reaching the water surface, therefore lowering the productivity of the kelp beds.[3]

Pollution

In a large ocean farm, dissolved organic compounds will be released by the algae at rates as high as 40 percent of the net carbon fixed.[4] In brown seaweeds the exudations are probably toxic to some marine organisms at elevated concentrations.

Pollution could include increased pollution from human worker-associated wastes, wastes from machinery, large structures, and plants, and storm debris.

---

[1] Zenkovich, V. P., 1971. "A theory of the Development of Accumulation Farms in the Coastal Zone," pp. 94–116. In J. A. Steers (ed.), "Introduction to Coastline Development." MIT Press, Cambridge, Mass.

[2] Hruby, Thomas, 1978. "Environmental Impacts of Larger Scale Aquatic Biomass Systems," pp. 209 and 207. In "Cost Analysis of Aquatic Biomass Systems," Dynatech R. & D. Co., July 25.

[3] Ibid., p. 201.

[4] Sieburth, J., 1969. "Studies on Algal Substances in the Sea, III. The Production of Extracellular Organic Matter by Littoral Marine Algae." J. Exp. Mar. Biol. Ecol. 3:275–289.

It should also be noted that pollution from sewage outfalls has severely reduced some natural kelp beds in southern California. This was first noted in 1945 when beds nearest major sewage outfalls began to deteriorate. The deterioration fanned out and beds were affected at increasing distances from the discharges.[5] Deterioration of kelp also accelerated when an influx of warm oceanic water persisted off California from 1957 to 1961.[6]

Fish, Bird, and Plant Populations

Kelp beds are complex marine communities providing food and habitat for a myriad of organisms, including fish and invertebrates of both commercial and sport importance,[7] Quast states, "In regions with similar rocky substrates of low and moderate relief, the areas with kelp give estimates of the standing crop of fishes that are two to three times as great as that of similar habitats barren of kelp." [8]

It is also believed by many that open ocean kelp cultivation will significantly alter the natural ecosystem through artificial upwelling.

Grazing control techniques can also have a significant impact on local shellfish populations in natural kelp beds. North and McPeake found that quicklime sprayed into the bed quickly eliminated urchins. However, quicklime also affects abalone beds in the area and kills edible, commercially valuable red sea urchins.

Biologists believe that harvesting kelp in beds near islands used by sea birds as breeding grounds disrupts feeding, roosting, and breeding activities. In addition, harvest of coastal kelp may in fact increase the individual plant density of a kelp bed to such an extent as to alter the benthic composition (both animal and plant).[9]

Underneath a moderate to dense surface canopy of *Macrocystis*, the light intensity may be one one-hundreths of surface values.[10] The shading effect of a kelp canopy tends to reduce the standing crop of benthic algae below. However, the presence of the kelp canopy appears to encourage the growth of algae which thrive under low light conditions.[11] North states, "The standing crop of benthic algae in an open area may be seven times that existing below a *Macrocystis* canopy." [12] However, the amount of overall plant material in a *Macrocystis* canopy is three to four times as great within the bed as outside.

The upwelling could hurt commercial fishing by tampering with the food chain of deepwater fish. New deepwater fisheries are being developed off the southern California coast, increasing the potential for a conflict.

In open ocean farms, the upwelling of deep waters would tend to draw up bacteria, protozoans, a wide variety of invertebrates, and possibly some fish. Past experience indicates that these organisms

---

[5] Wilson, K. C., P. L. Haaker, and D. A. Hanay, 1977. "Kelp Restoration in Southern California,' pp. 184–185. In Robert W. Krauss (ed.), "The Marine Plant Biomass of the Pacific Northwest Coast.'· Oregon State University Press, Oregon.

[6] California State Water Quality Control Board, 1964. "An Investigation of the Effects of Discharged Wastes on Kelp." California Water Control Board. Sacramento, pub. 26, 124 p.

[7] Wilson, "Kelp Restoration," p. 184.

[8] Quast, J. C., 1968. "Some Physical Aspects of the Inshore Environment, Particularly as It Affects Kelp Bed Fishes," pp. 25–34. In North, W. J. and C. L. Hubbs (eds.), "Utilization of Kelp Bed Resources in Southern California." California Department of Fish and Game, Fish Bull. 139 (out of print).

[9] Ehorn, William, Channel Islands National Monument, personal communication.

[10] California State Water Quality Control Board, "Effects of Discharged Wastes on Kelp," 124 p.

[11] Wilson, "Kelp Restoration," p. 184.

[12] California State Water Quality Control Board, "Effects of Discharged Wastes on Kelp," 124 p.

will probably die because of the rapid pressure changes which occur when water is brought to the surface. It appears small-diameter pipes with rapid flow rates will have a worse impact on organisms than large diameter pipes with slower flow rates.[13]

Data suggest that the temperature and density gradients resulting from artificial upwelling will form a barrier to movements of both fish and marine mammals.[14] [15] [16] Thus, species from the warmer surface water will not migrate into the open ocean farm fertilized by upwelling. By fertilizing the algal farms with artificial nutrients, the potential negative impacts of artificial upwelling would be avoided. However, the problems associated with using fertilizers include high cost, difficulty obtaining equal distribution throughout the farm, and possible overfertilization of the oceanic botton.

Fish Production Around an Open Sea Farm

Drifting marine algae and moored, manmade objects attract fish in the sea. Sport fishermen often intentionally fish around such things [17] and American purse-seine and live-bait fishermen search for yellowfin tuna and skipjack around floating algae in the open sea.

Unpublished studies, carried out at the National Marine Fisheries Service Laboratory in Honolulu, centered around a floating raft with a submerged observation chamber where an observer could note and photograph fish accumulating around objects nearby. Floating objects that protrude down into the water (as would a floating kelp farm) attract more fish than those floating flat on the surface. By contrast, horizontal objects, while attracting fewer fish in total, attract more kinds of fish.

Studies in southern California and northern Baja, Calif., found that juvenile rockfish and kelp bass accumulated around the floating kelp plants. This suggests that fish production may be possible in open ocean farms. However, much is unknown about the effects of artificial upwelling of cool ocean water in conjunction with open ocean farms.

Researchers have noted the abundant presence of sea slugs on kelp in open water. These animals, which would normally be eaten in natural kelp forests, may thrive because carnivores are absent. It might be possible to intentionally establish specific food chains around floating kelp farms, so as to produce specific types of food.

Kelp stands naturally shelter and support abundant faunal communities. The larvae of small animals attach themselves to and then grow on the kelp. They obtain nutrition by filtering plankton out of the water. Fish graze on the kelp and presumably digest those encrustations of small animals. The fish may also obtain some sustenance from the kelp vegetation or the plankton in the waters.

---

[14] Marr, J. S. W., 1962. "The Natural History and Geography of the Antarctica Krill (*Euphasia superba* dana). "Discovery Rep." 32:33–436.

[15] Marti, Y. Y., 1969. "Marine biological resources of the Antarctic. First expedition of R. V. Academician Knipowich. Porc. of the All Union Research Institute of Marine Fisheries and Oceanography." Vol. 66 (4-page English summary).

[16] Wiebe, P. E., et al., 1976. "Gulf Stream Cold Core Rings: Large-Scale Interaction Sites for Ocean Planktonic Communities." Deep Sea Research. 23:695–710.

[17] Wickham, D. A., J. W. Watson, and L. H. Ogren, 1973. "The Efficacy of Midwater Artificial Structures for Attracting Pelagic Sport Fish." Trans. American Fish. Society, 102:563–572.

[13] Hruby, "Environmental Impacts," p. 202.

Future Conflicts With Competing Ocean Users

Large open ocean farms will obviously have a negative impact on commercial shipping if they act as barriers. Much shipping now follows well established shipping lanes or great circle routes for reasons of economy. Presumably, attention will be paid to this fact and farms will be established outside major routes.

A current conflict exists between those who wish to preserve natural kelp beds, and offshore oil and gas drillers in the Santa Barbara Channel off the California coast. It is believed by some that oil may have minor impacts on mature kelp. Direct effects on young kelp forests may be considerable, as a result of sinking and tarry aggregations on holdfasts of kelp.[18] In the future it is expected that there will be an expansion of offshore oil exploration and drilling offshore all U.S. coasts.

In addition to sea lanes and oil drilling activities, many other users of ocean space will need to be considered prior to establishing a large kelp farm. These include commercial fishing, recreational fishing, recreational boating, waste dumping and outfalls, ocean research and surveys, coastal and local shipping, military activities, dredging and dredge disposal.

---

[18] Davis, Betty. University of California at Berkeley, personal communication.

LEGAL AND REGULATORY ASPECTS OF NATURAL AND OPEN OCEAN KELP FARMS

The development and operation of ocean kelp farms involves legal and regulatory questions at the State, Federal, and international level. More specifically, questions arise concerning the offshore jurisdictional zones which will apply to ocean farms, the relevant norms of international law, California regulations regarding the harvesting of kelp, and U.S. Federal Government regulations.

There are several jurisdictional zones which must be understood in order to define the differences between State, Federal, and international authority over marine aquaculture. These are the "territorial sea" which extends 3 miles seaward of the coastal baseline; the "contiguous zone" which extends 9 miles beyond the territorial limits; the high seas which lie beyond the territorial zone; and the continental shelf which extends outward from the coast to a depth of 200 meters.[1]

California State Regulations Concerning Kelp Harvesting

Macrocystis has been harvested commercially and processed in California since 1910. This giant kelp is found from Sitka, Alaska, southward to Point Abrejos, Baja, Calif. However, kelp harvesting has been centered in southern California. As kelp occurs naturally from just outside the surf to depths of 100 feet, it is within the territorial sea and, therefore, in the State's jurisdiction.[2]

Jurisdiction over the territorial sea is shared between the Federal Government and the coastal State. Title to the territorial sea and the right to manage the seabed and the mineral and living resources rests with the State as a result of the Submerged Lands Act of 1953.[3] The title of the act declares its purpose to confirm "title to and ownership of the lands beneath navigable waters within the boundaries of the respective States, and the natural resources within such lands and waters. . . ." The act defines natural resources to include kelp and other marine animal and plant life. Thus, in the absence of any conflicting Federal legislation, the States may exercise exclusive control over both fishing and aquaculture in the territorial sea and the land beneath it.[4] Further extending the State's sovereignty is the Coastal Zone Management Act of 1972. It states that Federal action in a State's coastal zone must be consistent with the State's coastal management program, to the maximum extent practicable. The Submerged Lands Act of 1953 does reserve to the Federal Government control over navigation, defense and foreign affairs powers under the Constitution.[5] Also, any aquaculture facility which could impair navigation would require a permit from the Army Corps of Engineers.

---

[1] Benner, Richard P., 1977. Legal considerations in the maritime setting, pp. 378–381. *In* Rober W. Krauss (ed.), The Marine Plant Biomass of the Pacific Northwest Coast. Oregon State University Press, Oregon.

[2] California Department of Fish and Game, 1971. Marine plant resources. *In* California's living marine resources.

[3] Benner, *Legal*, p. 381.

[4] 43 U.S.C. 1311(d).

[5] Benner, *Legal*, p. 381.

Kelp beds in California are numbered and cover a total area of about 18,000 hectares (44,000 acres) although the areas are not necessarily totally filled by kelp. Commercial kelp harvesters may lease two-thirds of the kelp beds for a 20-year period. The remaining one-third are not leased; they are designated as open beds and may be harvested by anyone. A single company may not lease more than a total of 25 square miles or 50 percent of the total harvestable kelp areas, whichever is greater. Commercial harvesters bid for the privilege of exclusive use of leased beds. The minimum rental for leased beds is 10 cents per wet ton of kelp harvested plus a minimum rental of $175 per square mile per year. Harvesters purchase an annual license and pay a royalty of $.97 per ton of wet kelp harvested from open beds.[6] Over or under-harvesting a leased bed is a violation of the lease agreement, and a fine and loss of the exclusive lease can occur.

Open Ocean Kelp Farms

Open ocean kelp farms which lie from 3 to 200 miles out to sea are in the contiguous (up to 12 miles) and high seas (beyond 12 miles) zones, as well as the Continental Shelf zone (to the edge of the Continental Shelf). Federal and international jurisdiction has been established within the contiguous zone but remains unclear on the high seas.

The Federal Government's title to land under the contiguous zone was confirmed by the above-mentioned Submerged Lands Act.[7] In 1966, for example, an exclusive fisheries zone was created to prohibit foreign fishing in the contiguous zone.[8] In so doing, Congress explicitly denied any intention to extend State jurisdiction to the "natural resources beneath and in the waters within the fisheries zone." [9] In 1976, this exclusive fisheries zone was extended to the 200-mile limit by the Fishery Management and Conservation Act.[10]

International law clearly recognizes the right of a coastal nation like the United States to establish rules governing its contiguous zone.[11] Arguments have been advanced that the Federal Government has the power under international law to license aquaculture in the contiguous zone.[12]

The Continental Shelf zone as defined in the law extends from the seaward edge of the territorial sea to a depth of 200 meters or to the point of possible resource exploitation. The seminal document in Continental Shelf jurisdiction is the Truman Proclamation of 1945,[13] in which the United States made a unilateral claim to the natural resources on its Continental Shelf. This was followed 8 years later by the Outer Continental Shelf Lands Act of 1953,[14] which generally reaffirmed the U.S. claim to Continental Shelf resources (oil, gas, and minerals) declared in the Truman Proclamation. Some coastal States have made claims to the Outer Continental Shelf beyond the 3-mile

---

[6] California Department of Fish and Game Regulations, Title 14, Section 165.5.
[7] 43 U.S.C. 1302.
[8] Fisheries Zone Act of 1966, 16 U.S.C., secs. 1091–1094.
[9] 16 U.S.C. 1094.
[10] Benner, *Legal*, p. 380.
[11] Convention of the Territorial Sea and the Contiguous Zone, Apr. 24, 1958. 15 U.S.T. 1707 (1964), T.I.A.S No. 5639. U.N.T.S. 205 (in force Sept. 10, 1964).
[12] Smith and Marshal, 1974. Mariculture, a new ocean use. Ga. J. Int'l and Comp. L. 4:2; pp. 326–327.
[13] Truman Proclamation of 1945, Pres. Proc. No. 2667, Ex. Order 9633, 3 C.F.R. 1943—48. Com. at 67, Dept. of State Bull. 13, Sept. 30, 1945.
[14] 43 U.S.C. at 1331, et seq.

territorial sea, but the Supreme Court has ruled against them. Most recently in *United States* v. *Maine* in 1975.[15]

The high seas lie beyond the contiguous zone (greater than 12 miles out to sea). In 1974, we asserted jurisdiction over deepwater ports, which by legislative definition are on the high seas. The U.S. Fisheries Conservation and Management Act in 1976 extended U.S. control over its offshore fisheries out to 200 miles. Congress extended the Federal Water Pollution Control Act in 1977 from the 12-mile edge of the contiguous zone to 200 miles.[16]

However, national and international jurisdictional questions are still not settled regarding the high seas and Continental Shelf zones. Since December 1973, the international community has been attempting to negotiate a new treaty for the oceans at the Third United Nations Conference of Law of the Sea (UNCLOS III). Regardless of whether or not a concrete treaty emerges from UNCLOS III, the future direction of the law of the sea has already been greatly influenced by the negotiations which have taken place.

The following language has been proposed for the treaty:

"1. In the exclusive economic zone (200 miles out to sea), the coastal State has:

> (*a*) Sovereign rights for the purpose of exploring and exploiting, conserving and managing the natural resources, whether living or nonliving, of the seabed and subsoil and the superadjacent waters, and with regard to other activities for the economic exploitation and exploration of the zone, such as the production of energy from the water, current and winds.[17]

If the treaty is enacted, the United States would be given the jurisdiction by international law to regulate, authorize, and protect open ocean farms on the high seas within the 200-mile economic zone.

If the UNCLOS III negotiations fail and there is no treaty, or if the United States is not a signatory to the treaty, there is still a real possibility that the right of coastal States to control economic activity on the high seas within the 200-mile economic zone will have gained approval through the processes of customary international law. The apparent agreement of most coastal States to the UNCLOS negotiations for a 200-mile economic zone, and the counting pace of technological development and mutual benefits to coastal States in controlling and regulating their 200-mile economic zones, point to this eventual outcome.

Licensing of Ocean Farms

As with deeper ports, permits or licenses will undoubtedly be necessary for ocean farms in order to set safety, environmental, and other standards, and to control the siting. Similarly the sale/lease of sites for offshore oil and gas exploration serve as an effective precedent. It is assumed that open ocean farms will be U.S.-owned.

---

[15] Benner, *Legal*, p. 379.
[16] The Clean Water Act, 95th Congress, 1st Session, Committee Print, December 1977, p. 75.
[17] Informal Single Negotiating Text, Art. 56, Third United Nationsl Conference on the Law of the Sea, Part XI, and H.R. 3350, the "Murphy-Breaux" bill, in the U.S. Congress, which are two leading position statements.

Approval of the sites will probably be required. The Corps of Engineers, under section 1333(f) of the Outer Continental Shelf Lands Act, must issue a permit to organizations for exploitation of the seabed. It is likely that open ocean farms would require a permit under this section, either on the grounds that mooring of an ocean farm was an exploitation of the seabed, or that the Corps, authority should be extended to ocean farms on its own merits. If the Corps is not given authority to issue permits, specific site approval will be given as a part of the licensing process of the Federal Government. Application for a Corps or other permit will probably trigger a request for an environmental impact statement.[18]

It should be noted that the biological testfarm offshore California is located beyond the 3-mile territorial sea and was issued a Corps of Engineers permit. No environmental statement was required for this small research station.

---

[18] 42 U.S.C. 4232(c).

CURRENT SEAWEED RESEARCH AND FUTURE RESEARCH NEEDS

At present, research on marine plants can be divided into two categories based on funding emphasis. First comes the Gas Research Institute (GRI) marine biomass research program. This program, described in another chapter, has received considerable attention and support with total funding to date of over $9 million.

The second category includes a diverse group of programs mainly in botanical research and focused on attempts at a better understanding of marine plant characteristics, growth, cultivation, and potential uses. This research has been carried on by a variety of people at universities and research institutions and has been funded principally by NOAA's Sea Grant Office, the National Science Foundation, and the DOE. The total yearly budget for all these activities is about $1 million.

The following section will touch on some past research efforts and future research needs.

Macrocystis Research

The commercial alginate industry in the United States relies almost exclusively on wild beds of *Macrocystis* for the raw material and there has been a great deal of work done to restore and expand natural beds. The expansion of these natural beds would be advantageous, as the industry is resource-limited and now purchases dried kelp from other countries.

The decline of natural beds of *Macrocystis* off the California coast beginning in the 1940's and continuing to complete disappearance of some beds in southern California by 1960, due to pollution, grazing, and warm water influx, has been of great concern. This led to funding by Federal, State, and private groups in an attempt to understand and reforest these kelp beds. Work to rehabilitate the beds by artificially generating young kelp plants has been attempted through collection of zoospores on substrates, induction to fertility, and mass production (billions) of young *Macrocystis* plants for outplanting. At present, the method of outplanting involves scraping the young sporophytes from the artificial substrate and dispersing them at the restoration site. This method is inefficient since approximately 1 sporophyte per 100,000 will reattach and develop into a juvenile.

The attempts to reforest California kelp beds have been very successful. However, this restoration has resulted in a monoculture of kelp in some areas, which has reduced total species (animal and plant) diversity in these areas.[1]

---

[1] Ehorn, William. Channel Islands National Monument, personal communication.

Research into future open ocean farming of kelp includes rearing plants in the laboratory, then outplanting them onto suitable artificial substrates. A special seawater greenhouse has been built at the University of California at Santa Barbara where water motion is supplied to large tanks in which *Macrocystis* is grown.

With this system, kelp plants can be grown to lengths of up to 3 meters (10 ft) at which time they can be outplanted for further growth. Once attachment is achieved, growth of juveniles to adults takes approximately 8 to 12 months and individual plants of *Macrocystis* may survive for up to 14 years. The survival rate of juvenile kelp plants is very low; about 2 percent after 9 months.

It is widely accepted that nitrogen is an important and limiting nutrient in the marine environment. Nitrogen uptake studies, not growth studies, have been done for *Hypnea*, *Macrocystis*, and *Iridea*. Preferential, assimilation of ammonium over nitrate is known for many marine algae; however, definitive findings for each species have not yet been established.

Therefore, with the different nitrogen preferences of different species, detailed physiological information will be necessary for efficient fertilization of potential farm species for efficient fertilization.

North has done extensive research on nutrient requirements of kelp and existing nutrients in seawater. His conclusion is that, although upwelled seawater is important for renewing nitrogen and phosphorous, it is considerably less influential as a renewal mechanism for other trace elements. Experiments have indicated that growth rates by juvenile *Macrocystis* sporophytes in seawater can be greatly stimulated by proper nutrient enrichment.[2] [3] [4] Devastating and rapidly irreversible effects were also observed in nutrient-omission experiments, suggesting an inability of the plant to store reserves.[5]

There has also been an active group work with *Macrocystis* at the Bamfield Marine Station, Bamfield, Vancouver Island, British Columbia, under the direction of Dr. Louis Druehl (Bamfield Marine Station and Simon Fraser University). They have even constructed a simple artificial substrate *Macrocystis* farm which was used for transplant and growth studies.

Research Needs

OTA's study of open ocean kelp farming indicates that further research is necessary in several areas of kelp productivity, including:

- Determination of the average kelp yields based on measurements of kelp in slow and rapid seasonal growth periods in natural beds, sampled over a wide geographic range.

In order to determine the feasibility of future ocean farms, several aspects of marine plant culture require substantial clarification. These aspects include greater ability to: (1) make accurate productivity estimates for a wide range of conditions; (2) determine nutrient requirements and how best to apply nutrients; (3) understand diseases and other adverse impacts on plants; and (4) modify plants to suit alternative farm designs.

---

[3] North, W. J., 1976. Ocean food and energy project. Subtasks 1 and 2. Biological studies of *Macrocystis pyrifera* in unwelled oceanic water. Naval Undersea Center, San Diego, Calif. Final report. Contract No. 123-76-C-0313, ERDA/USN/1027/76/4 Dist. Category UC-61.

[3] North, W. J., 1977a. Possibilities of biomass from the ocean; the marine farm project. *In* proceedings, symposium on biological conversion of solar energy, University of Miami, November 1976.

[4] North, W. J., 1977b. Growth factors in the production of giant kelp. *In* Proceedings, symposium on clean fuels from biomass and wastes, Orlando, Fla., January 1977.

[5] North, W. J., 1977. Algal nutrition in the sea-management possibilities, p. 228. *In* Robert W. Krauss, (ed.), The Marine Plant Biomass of the Pacific Northwest Coast. Oregon State University Press, Oregon.

- Study of the causes of fluctuations in kelp bed appearance and disappearance.
- The effect of frequency and depth of kelp cutting on kelp regrowth, productivity, and resistance to storm damages.
- Studies with respect to the dynamics of natural vs. harvested kelp bed densities in relation to occupants such as benthic herbivores, other invertebrates and the fish that remove encrustations. Also the time needed for repopulation of cut areas, and comparative population sizes of biotic elements found in regrowth versus unharvested areas.[6]

As the major macro-nutrients required by kelp are nitrogen and phosphorous, the following research is necessary:

- Determination of the nitrogen level preferences for various kelp species that may be cultivated in future marine farms.
- The nitrogen and phosphorous content of open ocean water in different geographical areas where kelp farms are likely to be located.
- The necessity of relocating certain biotic components of natural kelp forests to open kelp farms.
- Whether chronic fertilization is necessary and the effects of same.

In the field of genetics, more research needs to be done on strains of kelp that are most suitable for open ocean survival, growth, and methane production.[7]

The major point many researchers agreed on is that more funds should be allocated towards research on kelp productivity, fertilization, and genetics, and less on different structural designs of open ocean farms.

Research Efforts on Other Marine Algae

Research on the cultivation of red macroalgae began in the late 1960's in Canada. In these studies the alga *Chondrus crispus* from which the stabilizer carrageenan is produced, was grown unattached in tanks of aerated, continually flowing seawater for periods of up to 1 year. Further research showed the importance of sufficient water motion, nutrients, and other factors on seaweed growth.[8] It also revealed the value of strain selection and vegetative propagation of large-scale cultivation of marine algae.

The red macroalga *Iridaea cordata* is widely distributed along the Pacific coast. Its high content of excellent carrageenan is responsible for its being studied for potential production. Because of their commercial value, *Iridaea* populations have been studied for harvesting potential, but were not found to be feasible crops, due to harvesting difficulties.

Another source of high quality carrageenan is the red alga *Eucheuma*, which has been successfully farmed in the ocean. The *Eucheuma* farming program began in the early 1960's in the Philippines under the leadership of the University of Hawaii and the first significant crops were harvested in the early 1970's.[9] Currently *Eucheuma* farming is a

---

[6] Davis, Betty, University of California, Berkeley. Personal communication, December 1978.
[7] Davis, Betty. University of California, personal communication.
[8] Neish, Ian C. Marine Colloids, personal communication.
[9] Hoffman, Strickland and Howery. 1976. Ocean food and energy from project subtasks 4. Preliminary design studies of substrates and upwelling system. Vol. 2. Contract No. EY-76-A-03-1027.

self-sustained business. The 1974 yield exceeded 10,000 tons. Most of the success with this species is due to the following factors: high value of the crop ($250–$700 per ton—30 percent or more moisture); high world demand for carrageenan; the discovery of very successful strain of carrageenan-producing *Eucheuma*; Philippine innovations; and the research aid of the personnel at the University of Hawaii, and industry.[10]

Genetic studies on carrageenan-producing *Gigartina* species are currently being conducted in laboratory culture at the University of California at Berkeley. Genetic stocks and hybrid progeny of *G. papillata* are being analyzed for high yield, high quality, carrageenan strains for cultivation. In addition, seasonal variation in carrageenan levels and quality are being followed in individual tagged plants in the field.

Research is also being conducted using sewage effluent as the nutrient base for macroalgae. The phycocolloid potentials of the agarophyte *Gracilaria foliifera* and the carrageenophyte *Neogradhiella baileyi* have been studied by the Woods Hole Oceanographic Institution in Massachusetts and at Fort Pierce, Fla., in tank culture as part of a sewage treatment program. In their facility a secondary sewage-seawater mixture is fed to unicellular algae which remove the nutrients. These algae are in turn consumed by bivalve molluscs. Effluent from the shellfish culture finally passes through tanks containing macrophytic algae which remove the nutrients regenerated by the molluscs. One of the objectives is to produce commercially valuable marine algal crops, as well as tertiary sewage treatment.

The need exists, according to researchers, for the establishment of a national culture collection with the capacity to maintain seaweed species, strains and cultivars as a source of research material and as a genetic bank in which to maintain living cultures. This would eliminate inefficient duplication of effort at some institutions where each investigator must maintain stocks of culture which might be irreplaceable and potentially valuable but are not the subject of current research.[11]

The major need identified by many scientists involved in seaweed research has been more funding of research on seaweeds other than *Macrocystis*. Many consider the funding level of less than one-third that of the GRI marine biomass program unacceptable.

The following table is a summary of seaweed research activities in the United States (excluding the GRI marine biomass program). This work is sponsored by DOE, NSF, and NOAA Sea Grant program. It can be seen that researchers are from a number of universities around the country and that the work is mainly in small individual grants. While this does not constitute a major program, it does denote a base of expertise which could be used to evaluate or complement large directed programs.

---

[10] Neish, Ian C., personal communication. Industry referred to in text is the Marine Colloids Co.
[11] Waaland, J. R. University of Washington, personal communication.

SUMMARY OF SEAWEED RESEARCH ACTIVITIES IN THE UNITED STATES (EXCLUDING GRI PROGRAM)

Name of principal investigator	Organization	Amount	Project title	Duration of award and years	Projected contribution
SEAWEED RESEARCH					
Department of Energy:					
W. J. North	California Institute of Technology.	$902,678	Biological Investigation of Marine Farms	24 mo., July 1976 to June 1978	Determine the chemical and physical environment of kelp growth.
J. Ryther	Woods Hole Oceanographic Institution.	205,713	Cultivation of Macroscopic Algae and Freshwater Aquatic Plants.	12 mo., September 1977 to August 1978.	Cultivate aquatic plants for fermentation to methane.
D. L. Wise	Dynatech R/D Corp	221,895	Acetic Acid Production from Marine Algae	12 mo., June 1977 to May 1978	Develop a process for liquid fuel production from aquatic biomass.
NATIONAL SCIENCE FOUNDATION					
W. J. North	California Institute of Technology.	110,600	Biological Investigation of Marine Farms	24 mo., June 1974 to June 1976	Conduct physiological studies of kelp growth as it is influenced by chemical and physical environments.
A. Mitsui	University If Miami	155,600	A Survey of Hydrogen Producing Photosynthetic Organisims in Tropical and Sub-Tropical Marine Environments.	24 mo., not available	Characterize promising species of marine blue-green algae which produce hydrogen gas.
Do	do	153,500	Production of Hydrogen by Marine Blue-Green Algae.	12 mo., June 1977 to May 1978	Characterize species of marine blue-green algae which produce hydrogen gas and optimize this activity by environmental means.
Do	do	270,000	Nitrogen Fixation with Photosynthetic Marine Microorganisms.	36 mo, January 1977 to December 1979.	Collect microorganisms from tropical marine environs; isolate nitrogen-fixing species; assess the production potentials.
Sea grant:					
M. Neushul	University of California	[1] 26,024	An Experimental Program to Develop Methods for Kelp Expansion and Enhancement.	24 mo, 1978 pending	Increase resources through improved management techniques in California; increase raw material for kelp industry and open ocean farming; develop maricultural techniques for other marine plant resources than Macrocystis.
A. Gibor	do	[2] 30,559	An Exploratory Study of the Vegetative Propagation of Benthic Marine Algae.	24 mo, 1978–80	Develop techniques for vegetative propagation of marine plants via tissue culture for aquacultural purposes.
W. T. Doyle	do	[3] 65,993	Carrageenophyte Cultivation, Genetics, Population Dynamics and Development of Agar Substitutes.	12 mo, 1977–78	Integrated studies of genetics ecology, physiology and biochemistry of carrageenophytes to select strains for high-yield production.

See footnotes at end of table.

SUMMARY OF SEAWEED RESEARCH ACTIVITIES IN THE UNITED STATES (EXCLUDING GRI PROGRAM)—Continued

Name of principal investigator	Organization	Amount	Project title	Duration of award and years	Projected contribution
M. Neushul	do	[4] 48, 337	Kelp Bed Mariculture and Resource Management.	do	To devise strategies to optimize exploitation of the kelp beds of California through rational management of the ecosystem.
W. J. North	California Institute of Technology.	[5] 52, 500	Restoration, Propagation and Management of Marine Algae.	do	Develop optimum strategy for fertilizing kelp beds and obtain information to form a basis for economic assessment.
T. F. Mumford	University of Washington	[6] 22, 500	Aquaculture of Seaweeds on Artificial Substrates.	do	Develop commercially feasible aquaculture techniques to grow economically important marine algae on artificial substrates.
M. S. Doty	University of Hawaii	[7] 40, 000	Seaweed Marine Agronomy	48 mo, July 1978 to August 1982	Determine gel qualities and quantities available from Gracilaria sp.; identify Hawaiian species that are likely to be farmable seaweeds for commercially valuable gels.
A. C. Mathieson	University of New Hampshire	[8] 32, 104	Phycocolloid-Ecological Studies of Underutilized Carrageenan and Agar Producing Red Algae.	12 mo, 1978–79	Identify and enhance mariculture of underutilized economic seaweeds; determine environ. effects on colloids; gain biol. information of economic seaweeds to efficiently use these resources.
D. Cheney	do	[9] 32, 640	The Application of Genetic Studies to Seaweed Cultivation Seed Stock Selection and Improvement in Chondrus crispus.	36 mo, 1978–80	Develop high yield stocks of Chondrus crispus suitable for cultivation.
J. R. Waaland	University of Washington	[10] 59, 100	Enhancement of Primary Production by Seaweeds.	24 mo, 1978–80	To improve seaweed aquaculture yield by enhancing primary production of cultivated carrageenan producers.
Groton BioIndustries Development Co.: H. H. Webber.	Groton BioIndustries Development Co.	([11])	Culture Systems	Not available	Plan, design and implement aquaculture systems.
COST ANALYSIS AND EVALUATION STUDIES					
Department of Energy: D. L. Wise	Dynatech R/D Corp	150, 000	Cost Analysis of Algae Biomass Systems	8 mo, July 1977 to February 1978	Obtain operating and harvesting costs of an algal biomass system.
J. C	Woods Hole Oceanographic Institution.	26, 162	Fuels from Solar Energy: Photosynthetic Systems—State of the Art and Potential for Energy Production.	12 mo, September 1977 to August 1978.	Analyze existing photosynthesis models as they apply to energy farms and determine yields using various systems geographic locations.

[1] $9,491 match.
[2] $14,227 match.
[3] $45,468 match.
[4] $28,548 match.
[5] $26,250 match.
[6] $47,000 match.
[7] $38,360 match.
[8] $16,818 match.
[9] $6,449 match.
[10] $22,000 match.
[11] Not available.