Y 4
. In 8/13
El 2

1040

In 8/13
E 12
91 Y4

OVERSIGHT OF ELECTRIC POWER CONTRACT, MONTANA

GOVERNMENT
Storage

HEARING

BEFORE THE

SPECIAL SUBCOMMITTEE ON LEGISLATIVE OVERSIGHT

OF THE

COMMITTEE ON INTERIOR AND INSULAR AFFAIRS UNITED STATES SENATE

NINETY-FIRST CONGRESS

SECOND SESSION

ON

PROPOSED BUREAU OF RECLAMATION CONTRACT FOR THE TRANSMISSION OF ELECTRIC POWER BETWEEN GREAT FALLS AND BROWNING, MONT.

APRIL 23, 1970

A11600 700508

RECEIVED
JUL 3 1970
THE LIBRARY
KANSAS STATE UNIVERSITY

Printed for the use of the
Committee on Interior and Insular Affairs

U.S. GOVERNMENT PRINTING OFFICE
WASHINGTON : 1970

44-439

AUTHENTICATED
U.S. GOVERNMENT
INFORMATION
GPO

COMMITTEE ON INTERIOR AND INSULAR AFFAIRS

HENRY M. JACKSON, Washington, *Chairman*

CLINTON P. ANDERSON, New Mexico
ALAN BIBLE, Nevada
FRANK CHURCH, Idaho
FRANK E. MOSS, Utah
QUENTIN N. BURDICK, North Dakota
GEORGE McGOVERN, South Dakota
GAYLORD NELSON, Wisconsin
LEE METCALF, Montana
MIKE GRAVEL, Alaska

GORDON ALLOTT, Colorado
LEN B. JORDAN, Idaho
PAUL J. FANNIN, Arizona
CLIFFORD P. HANSEN, Wyoming
MARK O. HATFIELD, Oregon
TED STEVENS, Alaska
HENRY BELLMON, Oklahoma

JERRY T. VERKLER, *Staff Director*
STEWART FRENCH, *Chief Counsel*
WILLIAM J. VAN NESS, *Special Counsel*
DANIEL DREYFUS, *Professional Staff Member*
CHARLES COOK, *Minority Counsel*

SUBCOMMITTEE ON LEGISLATIVE OVERSIGHT

HENRY M. JACKSON, Washington, *Chairman*

CLINTON P. ANDERSON, New Mexico
GORDON ALLOTT, Colorado

CONTENTS

STATEMENTS

	Page
Armstrong, Ellis L., Commissioner, Bureau of Reclamation, Department of the Interior, accompanied by William H. Keating, Acting Assistant Commissioner for Power and Engineering, Department of the Interior	21
Ebaugh, Harold C., chairman, Montanans for Reliable Electric Service, and manager, Hill County Electric Cooperative, Havre, Mont	59
Mansfield, Hon. Mike, a U.S. Senator from the State of Montana	8
McElwain, J. H., vice president, Montana Power Co	55
Melcher, Hon. John, a Representative in Congress from the State of Montana	15
Trommershausen, William E., partner and chief consulting engineer, R. W. Beck and Associates, Denver, Colo	43

COMMUNICATIONS

Brown, C. W., manager, Glacier Electric Cooperative, Inc.: Letter to Senator Mansfield, dated March 19, 1970	12
Jackson, Hon. Henry M., chairman, Committee on Interior and Insular Affairs: Letter to Secretary Hickel, dated April 10, 1970	6
Mansfield, Hon. Mike, letters to:	
Senator Jackson, dated April 2, 1970	6
Representative Ellender, dated May 28, 1969	10
Secretary Hickel, dated:	
January 14, 1970	12
March 25, 1970	13
Melcher, Hon. John: Letter to Secretary Hickel, dated March 25, 1970	13
Metcalf, Hon. Lee, letters to:	
Senator Jackson, dated April 2, 1970	6
Secretary Hickel, dated:	
December 17, 1969	11
January 14, 1970	12
March 25, 1970	13
Olsen, Hon. Arnold: Letter to Secretary Hickel, dated March 25, 1970	13
Ragolia, Joseph H., Colonel, USAF Congressional Inquiry Division: Letter to Senator Metcalf, dated April 7, 1970	31
Simonton, Fred G., executive director, Mid-West Electric Consumers Association, Inc.: Letter to Senator Jackson, dated April 17, 1970	53
Smith, James R., Asistant Secretary of the Interior, letters to Senator Jackson dated:	
March 28, 1970	1
April 22, 1970	7
Clyde Brown, dated March 13, 1970	13
Train, Russell E., Under Secretary of the Interior, Letters to:	
Senator Metcalf, dated January 7, 1970	11
Senator Mansfield, dated January 23, 1970	12

ADDITIONAL INFORMATION

Contract between the Montana Power Co. and the United States of America, Department of the Interior, Bureau of Reclamation	2
Exhibit A—Contract between the Montana Power Co. and the United United States, supplied by Senator Burdick	19
Great Falls-Browning 161 kv line and substation	23
Questions on load growth by Senator Metcalf, and answers by Mr. Armstrong	40
Transmission contract—Montana Power Co. (Great Falls-Cut Bank)	4

APPENDIX

Page

Background paper, prepared by W. E. Trommershausen 68
Jackson, Hon. Henry M., chairman, Committee on Interior and Insular Affairs: Letter to Ellis L. Armstrong, Commissioner of Reclamation, Department of the Interior, dated May 14, 1970 69
Stamm, Gilbert G., acting for Ellis L. Armstrong, Commissioner, Bureau of Reclamation: Letter to Senator Jackson, dated June 8, 1970 69
Taylor, Robert G., partner and manager, northeast regional office, R. W. Beck and Associates: Letter to Dermot Shea, executive secretary, Consumers Council, Boston, Mass., from the Congressional Record, March 31, 1970 63
Trommershausen, W. E., chief consulting engineer, R. W. Beck and Associates: Letter to Robert O. Marritz, Missouri Basin System Group, Denver, Colo., dated January 30, 1970 64

LEGISLATIVE OVERSIGHT HEARING

THURSDAY, APRIL 23, 1970

U.S. SENATE,
COMMITTEE ON INTERIOR AND
INSULAR AFFAIRS,
Washington, D.C.

The committee met, pursuant to call, at 9:30 a.m., in room 3110, New Senate Office Building Senator Clinton P. Anderson presiding.

Present: Senators Clinton P. Anderson (New Mexico), Quentin N. Burdick (North Dakota), Lee Metcalf (Montana), Len B. Jordan (Idaho), and Clifford P. Hansen (Wyoming).

Also present: Jerry T. Verkler, staff director; Charles F. Cook, Jr., Minority counsel; and Daniel A. Dreyfus, professional staff member.

Senator ANDERSON. The purpose of this hearing before the Committee on Interior and Insular Affairs this morning is to take testimony on the Bureau of Reclamation's proposed contract for the transmission of electric power between Great Falls and Browning, Mont.

By letter of March 28, 1970, Assistant Secretary of the Interior James Smith advised the chairman that the Department of the Interior had determined it to be to the economic benefit of the United States to enter into a power wheeling contract with the Montana Power Co. as opposed to construction of a 161–kv. Federal transmission line from Great Falls to Browning in Montana.

At the request of the Senators from Montana, the committee has scheduled a legislative oversight hearing to examine the background of this matter and the basis for the Department's decision.

Without objection, Assistant Secretary Smith's letter to Senator Jackson dated March 28; the letter of April 2 from Senators Mansfield and Metcalf requesting this hearing; and Senator Jackson's letter of April 10 to the Secretary, and maps pertinent to the area, will be included in the record at this point.

(The documents referred to follow:)

U.S. DEPARTMENT OF THE INTERIOR,
OFFICE OF THE SECRETARY,
Washington, D.C., March 28, 1970.

Hon. HENRY M. JACKSON,
Chairman, Committee on Interior and Insular Affairs,
U.S. Senate, Washington, D.C.

DEAR MR. CHAIRMAN: Public Law 91–144, the Public Works Appropriations Act, included $450,000 to initiate construction of the Bureau of Reclamation transmission line from Great Falls to Browning, Montana. This appropriation was conditioned on instructions from the Appropriations Committees of Congress that negotiations be resumed between the Bureau and the Montana Power Company in an effort to reach a satisfactory wheeling arrangement which would contain three conditions set out by the Committees. These conditions were as follows:

1. Assurance of reliable service and guaranteed adequate capacity to provide the load growths of the Cooperatives until 1980. (Customers' 1980 loads are esti-

mated to be 69 megawatts. Bureau and Company existing lines will be able to deliver 85 megawatts.)

2. Provision for adequate prior notice to the Company for installation of any additional facilities which may be required to meet load growth.

3. Provisions for cancellation if the Company declines to increase wheeling capacity.

In the event negotiations were fruitless, the Bureau was directed to report to both Committees and secure prior clearance before any of the $450,000 available was expended for initiation of construction of the Federal line.

A contract containing provisions which meet the three conditions set out by the Congressional Committees has been successfully negotiated. Vice President J. A. McElwain has, by signing the contract, accepted its terms for the Montana Power Company.

We have determined that it is to the economic benefit of the United States to enter into this contract with the Montana Power Company as opposed to construction of a 161-kv Federal line from Great Falls to the Browning area.

Copies of the contract and supporting papers are attached for your information.

The Bureau will withhold execution of this contract and arrange meetings to discuss it with the affected Cooperatives.

Sincerely yours,

JAMES R. SMITH,
Assistant Secretary of the Interior.

[Enclosures]

CONTRACT BETWEEN THE MONTANA POWER CO. AND THE UNITED STATES OF AMERICA DEPARTMENT OF THE INTERIOR, BUREAU OF RECLAMATION

TRANSMISSION SERVICE TO SHELBY-CUT BANK-BROWNING AREA

This Contract, made this _____ day of _____, 19__, in pursuance of the Act of Congress approved June 17, 1902 (32 Stat. 388), the Act of Congress approved December 22, 1944 (58 Stat. 887), and Acts amendatory thereof or supplementary thereto, between THE UNITED STATES OF AMERICA, hereinafter called the United States, represented by the Officer executing this contract, his duly appointed successor, or his duly authorized representative, hereinafter called the contracting officer, and THE MONTANA POWER COMPANY, a corporation duly organized, created, and existing under and by virtue of the laws of the State of Montana, hereinafter called the Contractor, its successors and assigns,

WITNESSETH

Whereas the Contractor has constructed a 115-kv transmission line from its switchyard near Great Falls, Montana, to its substation located near Cut Bank, Montana, and

Whereas the United States requires additional transmission capacity to provide reliability and to serve its electric loads in the Shelby-Cut Bank-Browning area and has proposed to construct a 161-kv transmission line from Great Falls, to Browning, and

Whereas the Congress of the United States has appropriated the sum of $450,000 to institute construction of said Great Falls-Browning line. However, the Appropriations Committees of the House and Senate have requested that the Bureau of Reclamation resume negotiations in an effort to reach satisfactory transmission arrangement with the Contractor, and further directed that the Bureau report to the House and Senate Appropriations Committees and secure prior clearance before any of the $450,000 is expended for initiation of construction of the Great Falls-Browning line, and

Whereas the Contractor's line has capacity surplus to its present needs and the Contractor is willing for the United States to utilize such capacity, and capacity in additional facilities if needed, to provide reliability and to serve preference customers of the United States in the Shelby-Cut Bank-Browning area, and

Whereas the Appropriations Committee of the House of Representatives believes any agreement between the parties should (1) assure reliable service and guarantee adequate capacity of the Company's line to provide for the load growth of the cooperatives until 1980; (2) make provision for adequate prior notice to the Company for installation of any additional facilities that might be needed to serve load growths; and (3) be cancellable upon reasonable notice if the Company declines increased wheeling capacity limits;

Now, therefore, in consideration of the mutual covenants and agreements herein contained, the parties hereto agree as follows:

1. The Contractor shall make available to the United States at Cut Bank, Montana, whatever capacity of the Contractor's 115-kv transmission that is required to serve loads of preference customers of the United States in the area. The Contractor will also make available to the United States at Cut Bank and at such other facilities and interconnections as agreed upon, whatever capacity of the Contractor's facilities hereafter to be constructed in the area that is required to provide a level of reliability of service such that said area loads of the United States can be carried at acceptable voltage levels during a most-critical outage of facilities serving the area.

In the event the parties cannot agree on such required facilities to meet the criteria herein set forth, the matter of needed facilities shall be submitted to a Board of Arbitration composed of three persons, one each to be appointed by the parties hereto and one to be appointed by the Chairman of the Western Systems Coordinating Council and the parties agree to be bound by such arbitration; Provided, that the Board of Arbitration shall make their determination based upon WSCC reliability criteria.

When additional facilities are required, Contractor agrees to furnish said facilities, and the United States agrees to pay to Contractor for use of such facilities a share of Contractor's fixed charges during the period of this contract proportional to the system improvement of each of the parties by reason of such additional facilities, as may be agreed upon between said parties.

2. The United States transmission system is already interconnected with the Contractor's facilities at the Contractor's switchyard at Great Falls, Montana, and the United States will not have to install any additional facilities at Great Falls at this time for the purpose of this agreement.

3. The Contractor will install or cause to be installed facilities necessary for making connection from the Contractor's substation near Cut Bank to Glacier Electric Cooperative's Cut Bank substation, said facilities to be approximately two and one-half (2½) miles of 115-kv transmission line, an oil circuit breaker bay complete and metering equipment having an estimated total installation cost of $110,500. This requirement shall be dependent upon the Glacier Electric Cooperative, Inc. agreeing to the interconnection of its facilities with the facilities of the Contractor, provided, however, that the United States and the Contractor will diligently attempt to obtain such agreement from the Glacier Electric Cooperative, Inc.

4. The Contractor shall accept delivery of electric power and energy from the United States, regardless of the origin, source, ownership, or type of generation used to produce such power and energy, at the present point of interconnection near Great Falls and deliver an equivalent amount of electric power and energy, less seven percent (7%) losses, to the United States at 115-kv at the Glacier Electric Cooperative's Cut Bank substation or at other interconnections established for reliability purposes as herein provided for, limited to the transmission capacity of the Contractor's line(s). Said transmission losses shall apply to deliveries metered at the Contractor's metering facilities at its line terminals. Said losses and capacity limitation shall not apply to inadvertent flows or emergency flows during line outages. Scheduling and energy accounting shall be in accordance with accepted procedures and practices in interconnection accounting.

5. (*a*) The United States undertakes and agrees to pay to the Contractor as a transmission facilities charge for the use of said 115-kv line from the Contractor's switchyard near Great Falls to Contractor's Cut Bank switchyard, commencing on the date that an interconnection is established between Glacier Electric Cooperative, Inc., and the Contractor, as follows:

Period.—From date of interconnection at Cut Bank to December 31, 1975 For each year from January 1, 1976 to termination of contract.

Payment.—$5,500.00 per month The larger of $5,500.00 per month or $\frac{(L-38{,}000\text{ kw})}{(50{,}000\text{ kw})}$ ($11,000) per month

Where L=the sum of the estimated annual peak kw loads of area preference customers of the United States as contained in then current 4-year estimates; *Provided,* That the United States will provide the Contractor with a 4-year estimate of said area preference customer peak loads by June 30 of each year, and said estimates shall be used in determining Factor L.

(*b*) In addition to the above charge, the United States undertakes and agrees to pay to the Contractor for the use of the interconnection facilities, if provided by the Contractor, between the Contractor's substation and the Glacier Electric Cooperative, Inc.'s substation to deliver power to its preference customers, the

sum of Six Hundred and Ninety Dollars ($690) per month during the term of this agreement, said payment to commence on the date an interconnection is established.

(*c*) These shall be the only charges for power and energy deliveries made at Cut Bank over Contractor's 115-kv Great Falls-Cut Bank line and such charges shall continue in effect until this agreement is terminated pursuant to the provisions of Article (7) or (8) hereof, so long as the facilities of the Contractor and Glacier Electric Cooperative, Inc. remain interconnected.

6. The parties hereto agree from time to time to jointly plan and review load forecasts to determine the necessity of additional transmission facilities as required in the area.

7. The United States upon four years notice to the Contractor may request the installation of any additional facilities that might be needed to provide reliable service and to serve load growths of its customers in the area. In the event the Contractor does not agree within 90 days of receipt of such a request to provide such additional facilities, the United States may cancel this agreement upon not less than four years notice. Such facilities shall be subject to an additional equitable annual charge as agreed to by the parties.

8. General power contract provisions: The General Power Contract Provisions (effective April 27, 1961, revised page 2 dated 8–7–68, revised paged 3 dated 1–2–69, and revised page 6 dated 7–28–69) attached hereto are hereby made a part of this contract the same as if they had been expressly set forth herein; *Provided,* That:

(*a*) Articles B, C, D, F, G, H, K, M, N, AA, BB, CC, DD, EE, FF, GG shall not be applicable under this contract.

(*b*) Notwithstanding the provisions of Article L(a), the metering equipment to be furnished and maintained shall be as described in Articles 3 and 4 of the contract.

9. This contract shall continue in force and effect unless one of the parties gives the other party at least four years prior notice of termination of said contract; *Provided,* That said notice shall not be given prior to December 31, 1976, except as otherwise provided in Article (7).

10. This contract shall become effective on the date of execution.

In witness whereof, the parties hereto have caused this contract to be executed the day and year first above written.

THE MONTANA POWER COMPANY
by ——— ———,
Vice President.

U.S. DEPARTMENT OF THE INTERIOR
By ——— ———

Attest:

———— ————,
Secretary.

TRANSMISSION CONTRACT—MONTANA POWER COMPANY (GREAT FALLS-CUT BANK)

History

The Bureau serves three preference customers in the area between Havre and Browning, Montana (160 miles east to west). These are: Hill County Electric Cooperative, Havre area; Marias River Electric Cooperative, Shelby area; and Glacier Electric Cooperative, Cut Bank-Browning area. The Havre-Browning line is a single 115-kv radial line about 160 miles long. The Bureau built the Havre-Shelby section in 1951; Glacier built the Shelby-Browning section.

Capacity of the line is limited to 38 megawatts. The long line and extremes of weather make it vulnerable to outages.

In 1966 Bureau studies showed that power loads would exceed the capacity of the line in the early 1970's. In addition the single radial line no longer met industry reliability standards. It was determined that a Bureau Great Falls-Shelby 115-kv line should be included in the FY 1968 program, and funds were subsequently included in the 1968 Appropriations Act. Montana Power Company was aware of these plans and had not registered objection.

In March 1967 Glacier officially requested the line be rerouted to Browning to provide loop service to that area. The Bureau and the other two Cooperatives concurred, and an understanding was reached with Glacier that it would bear the increased cost to do so. Montana Power Company was officially informed of this change in plans in March 1968. In April 1968 the Company advised of a probable need for a Company line from Great Falls through Conrad to Cut Bank, and suggested cessation of other plans pending joint studies for joint use of a Company-

constructed line. The Company subsequently opposed Bureau requests for funds in the FY 1969 budget for a 161-kv Great Falls-Browning line. The funds were deleted by Congressional Committees.

Through negotiations with the Company arrangements were worked out for Bureau use of the Company Great Falls-Cut Bank line through about 1972 with provision for the Bureau to construct and place in service in 1972 a 161-kv Great Falls-Shelby line. The Bureau would have paid $66,000 per year for use of the Company line until the Bureau line was placed in service. These negotiations carried through and were culminated on December 9, 1968, and the Cooperatives were kept fully informed of progress and developments. On December 17, 1968, the Cooperatives advised they did not find the negotiated arrangements acceptable, and they requested the Bureau to again seek appropriations for a Great Falls-Browning 161-kv line. The Bureau did request and obtained the funds with Congressional Committee direction to not expend any of the funds until further efforts to negotiate with the Company were undertaken.

Negotiations with the Company resulted in contract approved March 4, 1970:

1. The contract provides that for an annual charge of $74,000 the United States can utilize one-half the capacity of the Great Falls-Cut Bank line to deliver the requirements of its customers that are above its own transmission capability. If the United States desires to use more than one-half the capacity in the Great Falls-Cut Bank line the annual charge will be increased proportionately. The contract also provides arrangements for maintaining reliability of service in the area.

2. Contract is to the economic benefit of the United States as opposed to construction of a 161-kv line from Great Falls to the Browning area. It also is more economical than the cost of construction by the Bureau of a 115-kv line from Great Falls to Shelby.

3. Contract provides for the major points which the Committees of Congress considered necessary:

(*a*) Reliable service and adequate capacity to meet load growth of the Cooperatives until 1980. The Havre-Shelby-Cut Bank-Browning line, and the wheeling arrangement from Great Falls to Cut Bank, will enable delivery of approximately 85 megawatts—customer load in 1980 estimated to be 69 megawatts. If the Bureau and the Company views on a question of reliability cannot be resolved, the dispute will be submitted to a Board of Arbitration, one representative each from the Company and the Bureau, and one to be appointed by the Chairman of the Western Systems Coordinating Council. The Board's decision on reliability will be binding on the Bureau and the Company.

(*b*) Adequate notice to Company for installation of additional facilities. Contract provides notice by the United States to the Company on need for additional facilities; allows Company 90 days in which to indicate whether or not it will build. If the Company has not agreed within 90 days the United States may cancel the contract upon not less than four years' notice.

(*c*) The contract shall be cancellable upon reasonable notice if the Company declines increased wheeling capacity limits. The United States may terminate contractual arrangements upon four years' advance notice, giving the United States time to provide facilities on its own.

4. Cost to the United States under the contract will be between $66,000 and $74,000 annually depending upon construction of interconnection facilities at the terminus of the Company's line at Cut Bank. Alternate means of delivery would be between $60,000 and $100,000 higher annually.

5. The Company line can be tapped but payment for such tapping and delivery will be accomplished under existing contract with the Company. This would cost the Cooperative and/or the Bureau more than it would have had the Bureau been able to incorporate such tapping privileges in the contract under the $74,000 payment. The lack of tapping privileges is offset by the reduced cost to the United States of delivering load requirements of its customers over Great Falls-Cut Bank 115-kv line by the Company.

6. The contract is contingent upon appropriations being made by Congress for the annual payments.

7. The United States transmission system is already interconnected with the Company's at Great Falls. No additional facilities are needed for the purpose of this contract.

8. The Contractor will accept electric power and energy from the United States regardless of origin, source, ownership, or type of generation used to produce such power and energy.

9. The Company and the United States agree to jointly plan and review load estimates to determine the necessity of additional transmission facilities.

10. The contract provides for nondiscrimination in employment.

11. The contract continues in force and effect unless one party gives the other party at least four years' prior written notice of termination. However, such notice cannot be given prior to December 31, 1976, except the United States may elect to cancel if the Contractor does not agree to provide additional facilities required for reliable service.

U.S. SENATE,
OFFICE OF THE MAJORITY LEADER,
Washington, D.C., April 2, 1970.

Hon. HENRY M. JACKSON,
Chairman, Committee on Interior and Insular Affairs,
Senate Office Building, Washington, D.C.

DEAR MR. CHAIRMAN: For three years the members of the Montana Delegation have been deeply concerned about the adequacy and reliability of power supply available to the rural electric cooperatives in our State serving the territory east and immediately adjacent to the Glacier National Park, Glacier Electric Cooperative, with headquarters at Cut Bank, is in the area that can be served by the Bonneville Power Administration.

It has been obvious for some time that additional transmission facilities into the area are required if the Bureau of Reclamation is to have the capability of serving the increasing needs of the cooperatives on a reasonably reliable basis. Although Montana Power Company had no facilities and little load in the area, the company objected when the Bureau of Reclamation asked for an appropriation to build a 161 kv line from Great Falls to Browning. Shortly afterward, the company began construction of a 115 kv line from Great Falls to Cut Bank.

The Appropriations Committees provided funds in the 1970 budget for the Bureau line but directed the Department of the Interior to attempt to negotiate a contract with the company that would provide adequate and reliable service to the affected cooperatives. Obviously the Appropriations Committee expected a wheeling contract, if and when negotiated, to reduce Federal costs.

You can understand, I am sure, the great concern that we have in this matter. We have asked the Department of Interior for an opportunity to review and discuss any proposed contract before it is executed.

Despite our requests we have reason to be concerned that the Department will execute a contract before they discuss its term with members of the Montana delegation.

The draft of the contract was finally sent to us today by the Department of Interior. This proposed contract gives us a great deal of concern. Among other things the contract, if executed, would:

1. Create a transmission monopoly in Montana Power Company in the area now and in the future.

2. Commit the United States to finance, through annual charges, additions to the Company system even if they are more expensive than Federal construction.

3. Deny the cooperatives in the region, and their power supplier, Basin Electric, an opportunity to participate in future transmission planning for that part of Montana.

It seems pointless to document all of our concerns at this time. These we have mentioned indicate potential substantial change in Federal power policy that will no doubt have nationwide ramifications.

Because the Senate Interior and Insular Affairs Committee which you chair exercises legislative oversight over the Department, we would very much appreciate your Committee making inquiry into the proposed contract. A hearing would permit all concerned to present their views, including the Department of the Army which has located an ABM site in the area, which a reputable engineering firm reports will have unreliable power supply under the transmission system proposed in this contract.

Very truly yours,

MIKE MANSFIELD.
LEE METCALF.

APRIL 10, 1970.

Hon. WALTER J. HICKEL,
Secretary of the Interior,
Washington, D.C.

MY DEAR MR. SECRETARY: Assistant Secretary Smith's letter of March 28 advised me that the Bureau of Reclamation had determined that it is to the economic benefit of the United States to enter into a wheeling contract with the

Montana Power Company as opposed to the construction of a Federal transmission line between Great Falls and Browning, Montana.

As part of its legislative oversight function, the Senate Committee on Interior and Insular Affairs has scheduled a hearing on this matter for April 23, 1970. I would appreciate it if you will suspend further action on the contract until the hearing can be held.

The hearing will begin at 9:30 a.m. in Room 3110 of the New Senate Office Building. Please advise me of the names of the witnesses who will represent the Department.

Sincerely yours,

HENRY M. JACKSON, *Chairman.*

U.S. DEPARTMENT OF THE INTERIOR,
OFFICE OF THE SECRETARY,
Washington, D.C., April 22, 1970.

Hon. HENRY M. JACKSON,
Chairman, Committee on Interior and Insular Affairs,
U.S. Senate, Washington, D.C.

DEAR MR. CHAIRMAN: This is in reply to your April 10 letter concerning a wheeling contract with Montana Power Company as opposed to construction of a Federal transmission line between Great Falls and the Browning area, Montana.

As you requested, we have suspended further action on this matter subsequent to the 9:30 a.m., April 23, 1970, hearing you have scheduled.

Commissioner of Reclamation Ellis L. Armstrong will be the witness representing the Department. He will be accompanied by the Acting Assistant Commissioner—Power and Engineering, William H. Keating.

Sincerely yours,

JAMES R. SMITH,
Assistant Secretary of the Interior.

Senator ANDERSON. Senator Metcalf.

Senator METCALF. Thank you, Mr. Chairman.

The importance of electric power transmission has been underscored during recent weeks. There have been warnings by power industry officials and members of the Federal Power Commission. This Nation faces crucial power shortages, not only this summer, but throughout the decade. Brownouts and blackouts are likely.

Electricity is essential to a modern nation. The results of insufficient power range from personal inconveniences and hardship to national immobility.

The three components of an electric system—generation, transmission, and distribution—are interdependent. Transmission is the most vulnerable of these components. Without it, whole regions can be stilled and darkened within seconds.

This hearing was called by Chairman Jackson at Senator Mansfield's and my request. Today's hearing will deal primarily with transmission between Great Falls and Browning, Mont. This may appear to be a local problem. The record available so far, however, indicates quite the contrary.

What happens in power transmission in one State or region is important to other parts of the country. It is important to various government departments, including Defense, Justice, Agriculture and regulatory commissions. And it is important to a wide range of persons from New York financiers to Montana farmers.

It is my honor to call as the first witness the distinguished majority leader of the Senate, my Montana colleague, Senator Mike Mansfield.

Senator Mansfield.

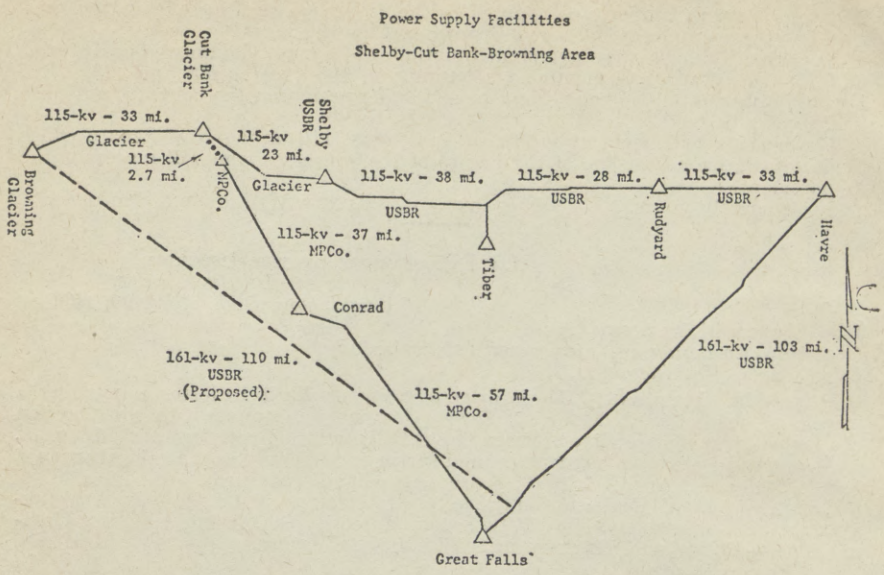

February 19, 1

STATEMENT OF HON. MIKE MANSFIELD, A U.S. SENATOR FROM THE STATE OF MONTANA

Senator MANSFIELD. Mr. Chairman, and distinguished colleague from Montana, I am pleased that the Senate Interior Committee has recognized its legislative oversight function and scheduled this hearing to discuss several matters involved in the negotiations surrounding the construction of a transmission line from Great Falls to Browning, Mont. Briefly, the question is whether the greatest benefit can be derived from Federal construction or a wheeling contract with a private utility. I would be grateful if you would indicate to the chairman of the full committee, Mr. Jackson, that the Montana delegation sincerely appreciates the committee's cooperation in this matter.

For a number of years the Montana congressional delegation has been deeply concerned about the adequacy and reliability of power supplies available to rural electric cooperatives in our State. The most crucial area is east of Glacier National Park served by Glacier Electric Cooperative. The co-op now receives power from a Bureau of Reclamation line, but it is also in an area which could be served by the Bonneville Power Administration.

Negotiations for the construction of a new transmission line have been under way for several years. If the Bureau is to maintain its capability, it will have to have a new line. As soon as it was evident that the Bureau was to seek an appropriation for the construction of a 161-kv. line from Great Falls to Browning, the Montana Power

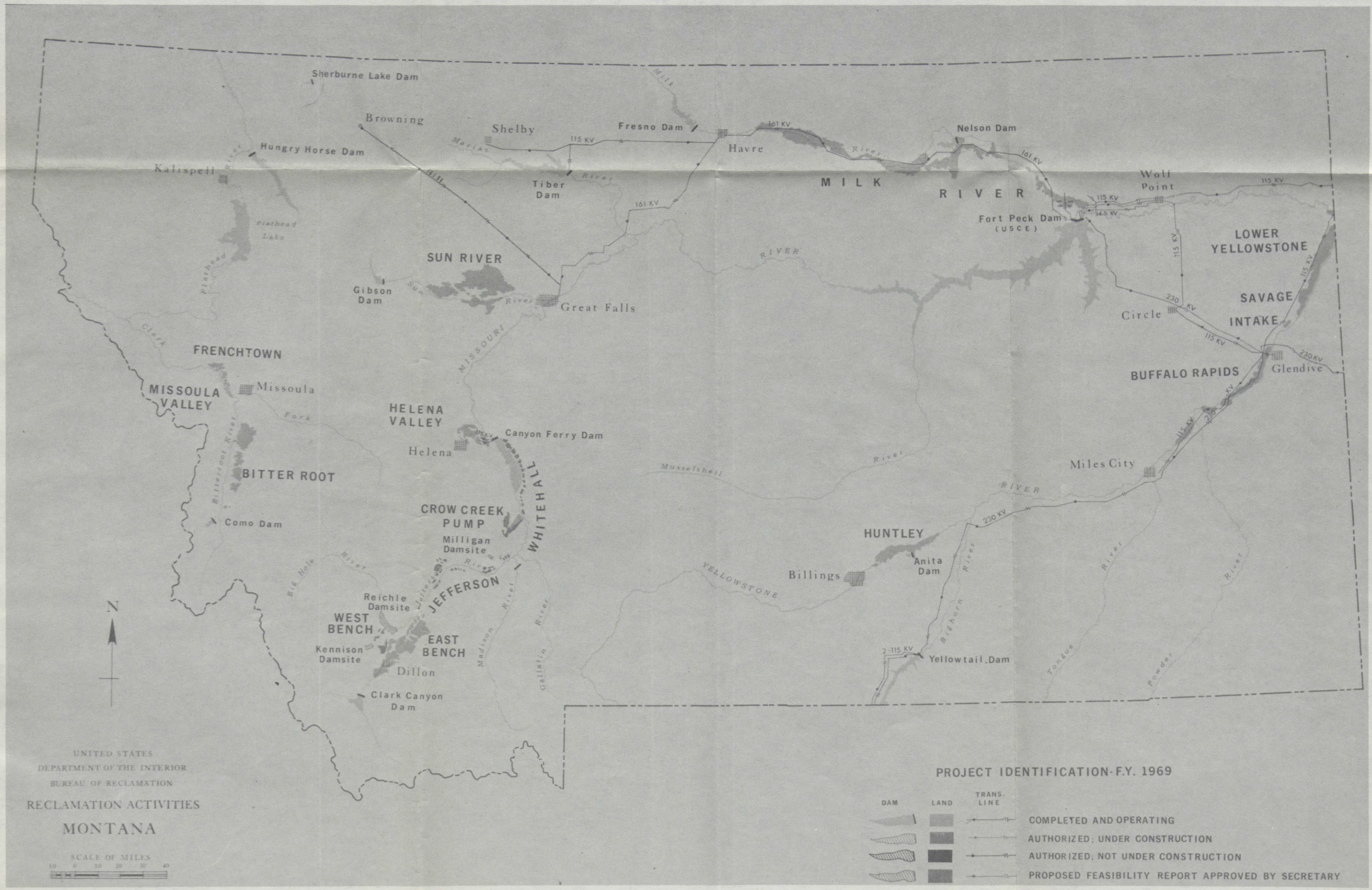

44-439 O - 70 (Face p. 8)

Co. began construction of a 115-kv line from Great Falls to Cut Bank. The funds appropriated for the Bureau for the current fiscal year include $450,000 for the agency to begin construction of the Bureau of Reclamation transmission line.

These funds have been held up at the instruction of the Appropriations Committee, which directed the Department of the Interior to attempt to negotiate a contract with the Montana Power Co. which would provide adequate and reliable service to the affected cooperatives.

Several weeks ago the Department of the Interior gave indications that it was about to approve a wheeling contract. After several years of talk, the Department was giving evidence of great haste in bringing the matter to a conclusion. At the request of the affected cooperatives, we explored this matter in some detail. There were a number of items in this proposed contract which we felt were not to the best interests of all concerned. Further discussions between cooperatives, the Bureau of Reclamation, and other interested parties indicated that there were many questions left unanswered and that the wheeling agreement proposed would establish some dangerous precedents.

It was at this time that we directed our request to the chairman of the Senate Interior Committee asking that this committee involve itself in these negotiations. In addition, our good friend and colleague, the Senior Senator from North Dakota, Milton Young, discussed this matter with the Subcommittee on Public Works Appropriations. While I do not consider myself an expert in these matters, there are several questions which I believe should be answered and clarified.

Reliability is one of the most important issues at hand. In this age of technical advancement, we should never have to cast doubt on the reliability of any power system. I believe that the Bureau of Reclamation has a firm responsiblility to see that the power needs of our electric cooperatives are protected.

I believe that the Secretary of the Interior has recognized the need for reliability in discussing the possibility of a National power grid system. I have long felt that there should be an intertie between the Bonneville Power Administration and the Missouri Basin. If this had been accomplished, I doubt that we would have this situation today.

The construction of a Bureau transmission line in the Great Falls-Browning area will provide necessary loop service. A wheeling agreement with the Montana Power Co. service would be limited to radial lines. We all recognize the need for upgrading reliability, especially in this part of Montana where the Defense Department is beginning construction of the new Safeguard system.

While the Secretary of the Interior has expressed an interest in a national power grid, it is my understanding that the Assistant Secretary of the Interior, James Smith, has rejected proposals to bring the Bonneville Power Administration east of the Continental Divide. I am not aware of any prohibition because at the present time power from the Hungry Horse project can be made available to the entire State of Montana under the Mansfield-Hungry Horse Act. Power from the Hungry Horse project is marketed by the Bonneville Power Administration.

In reviewing the negotiations of the past several weeks, another problem that concerns me greatly is a weakening of the territorial in-

tegrity guarantees to the co-ops of this area. A contract with the private utility would definitely be an infringement on the territorial integrity of the Glacier Electric Cooperative, forcing the co-op to be dependent upon a competing private utility for its future sources of power. Only last month the Administrator of the Rural Electrification Administration, David Hamil, reaffirmed his support of the concept of territorial integrity for rural electric cooperatives. It is essential that the Department of the Interior do the same. An infringement on the territorial integrity of the co-ops in this part of Montana would raise serious questions of antitrust violations and monopolies.

One concluding item which I would like to discuss briefly is planning. Planning has become a very important element in all development, both within the Federal Government and in the field of private enterprise. In reviewing the negotiations being discussed today, it appears that very little consideration has been given to planning. In fact, until Assistant Secretary Smith's recent appearance before the Senate Subcommittee on Public Works Appropriations, no consideration was given to inclusion of the cooperatives in future planning of their power needs, should an agreement be reached with the Montana Power Co. I would also like to ask whether, during this several year period of negotiations, the Department of the Interior has consulted with other interested Federal agencies; namely, the Department of Justice, the Department of Defense, the Federal Power Commission, the Rural Electrification Administration and the Bonneville Power Administration. Surely, these agencies should have been included or consulted at some point. Any agreement approved by the Department and the Bureau of Reclamation should include planning on the part of all parties—the customers, the Bonneville Power Administration, and the utilities.

Mr. Chairman and gentlemen of the committee, in conclusion I wish to express the desire that this hearing clear up a number of unanswered questions so that the Committee on the Interior can advise and counsel the Department before it resumes negotiations in making a decision on a wheeling contract with the Montana Power Co. or the construction of a Federal transmission line between Great Falls and Browning, Mont.

Congressman Olsen who has a meeting of his House Post Office and Civil Service Committee this morning, advises that he is in accord with the views which Senator Metcalf, Congressman Melcher and I are presenting to you for consideration by the Senate Interior Committee.

Mr. Chairman, I ask that copies of correspondence with the Department be included in the record of this hearing at this point.

Senator ANDERSON. That will be done.

(Correspondence referred to follows:)

MAY 28, 1969.

Hon. ALLEN J. ELLENDER,
Chairman, Subcommittee on Public Works Appropriations,
Committee on Appropriations, U.S. Senate, Washington, D.C.

DEAR MR. CHAIRMAN: On June 3, as Chairman of the Senate Subcommittee on Public Works Appropriations, you will be receiving testimony from several of my good friends in Montana who are supporting the Administration's request of $435,000 in fiscal year 1970 for the Bureau of Reclamation to begin work on a

161,000-volt transmission line from Great Falls to Browning, Montana. I had intended to appear personally in behalf of this item, but, as you know, it is necessary for me to be away from the city this week as a member of the United States-Canadian Interparliamentary Conference.

Last year, the Senate, in its wisdom, recommended the appropriation of these funds, but we were unable to obtain concurrence of the House Appropriations Committee on this item. An additional year of negotiations and discussions have proven fruitless in bringing about a solution to the power shortage in this part of Montana. The Bureau proposal will provide adequate service to rural electric cooperative, and private utilities serving this area of Montana. In my estimation, there are no reasonable alternatives to the plan as recommended by the Bureau. The people of this part of Montana deserve reliable sources of power.

My able colleague, Senator Lee Metcalf, will submit testimony which covers this item in greater detail. Congressman Arnold Olsen will appear before your subcommittee on this same project. Again, I wish to state that this item in the Public Works Appropriation Bill has my complete endorsement. I strongly recommend that the Senate again approve the appropriation of $435,000.

Thank you for your cooperation, and with best personal wishes, I am

Sincerely yours,

MIKE MANSFIELD.

DECEMBER 17, 1969.

Hon. WALTER J. HICKEL,
Secretary of the Interior,
Washington, D.C.

DEAR MR. SECRETARY: Public Law 91–144, the Public Works Appropriation Act, includes $450,000 to initiate construction of the Bureau of Reclamation transmission line from Great Falls to Browning, Montana. The appropriation is conditioned, however, on instructions from the Appropriations Committees that negotiations be resumed between the Bureau and Montana Power, in an effort to reach a wheeling agreement. In the event no satisfactory agreement can be reached, the Bureau is directed to report to the Appropriations Committees and secure prior clearance before the money is pent for the Bureau line.

You are well aware of our interest in assuring adequate and reliable transmission facilities in our State. In the event that a tentative contract is negotiated between the Bureau and the company at the regional level, we would appreciate your sharing with us, as soon as practicable, the proposed contract and background papers.

Very truly yours,

LEE METCALF.

U.S. DEPARTMENT OF THE INTERIOR,
OFFICE OF THE SECRETARY,
Washington, D.C., January 7, 1970.

Hon. LEE METCALF,
U.S. Senate,
Washington, D.C.

DEAR SENATOR METCALF: This is in reply to your letter of December 17, 1969, to Secretary Hickel, signed by both you and Senator Mansfield. The December 17 letter was relative to contract negotiations between the Bureau of Reclamation and the Montana Power Company on transmission between Great Falls and Browning, Montana, and was acknowledged by our letter of December 23 to Senator Mansfield.

On November 26 Senator Ellender forwarded to the Commissioner of Reclamation your letter to him of November 19, 1969, and his reply of November 26. The Bureau advised Senator Ellender that it was forwarding the letters to its Regional office in Billings, Montana, so that the thoughts contained therein could be followed in the ensuring negotiations.

A meeting was held on December 15 in Billings between Montana Power Company representatives and the Bureau to discuss a preliminary contract draft prepared by the Company. The meeting was concluded with agreement that the Bureau would send a revised draft to the Company. On December 19 the Regional office forwarded a revised draft to the Company.

The draft is now in the preliminary stage. The Bureau is attempting to have a revised draft for presentation to the cooperatives at a meeting scheduled January 7, 1970, which will comply with all of the stipulations required by the House and Senate Appropriations Committees.

It is the intent of the Bureau to present a report to both Committees as soon as a decision as to the method of service is reached. If it is decided to accept the proposal of the Montana Power Company we will send you a copy of the draft of contract.

Your continued interest in our power program is appreciated.

Sincerely yours,

RUSSELL E. TRAIN,
Under Secretary of the Interior.

U.S. SENATE,
OFFICE OF THE MAJORITY LEADER,
Washington, D.C., January 14, 1970.

Hon. WALTER J. HICKEL,
Secretary of the Interior,
Washington, D.C.

DEAR Mr. SECRETARY: On 17 December we wrote you regarding the appropriation of $450,000 to initiate construction of the Bureau of Reclamation transmission line from Great Falls to Browning. The appropriation is conditioned by instructions from the Appropriations Committees regarding negotiations between the Bureau and Montana Power for a wheeling contract. In the event no satisfactory agreement can be reached, the Bureau is directed to report to the committees and secure clearance before spending the money for the Bureau line.

In our letter we made two requests. We asked to receive a copy of the contract negotiated at the regional level, if a contract is negotiated. Secondly, we asked for copies of background papers regarding the proposed contract.

The Department's 7 January response, signed by Under Secretary Train, is not responsive to the second point. As to the first point, the letter states only that a copy of the draft of the contract will be furnished only "if it is decided to accept the proposal of the Montana Power Company.

Our constituents want to be assured of reliable and adequate power supply. Not only as Senators from the state involved, but as members of the Appropriations and Interior committees, we are directly involved. Therefore, we repeat our original request.

Very truly yours,

MIKE MANSFIELD,
LEE METCALF.

U.S. DEPARTMENT OF THE INTERIOR,
OFFICE OF THE SECRETARY,
Washington, D.C. January 23, 1970.

Hon. MIKE MANSFIELD,
U.S. Senate,
Washington, D.C.

DEAR SENATOR MANSFIELD: Your January 14 letter requesting information in addition to that supplied in our letter of January 7 is acknowledged.

We stated in our January 7 response that the draft under consideration was in a preliminary stage. Since the date of our letter the document has been modified to some extent but is still considered to be preliminary. Neither we in the Department nor the Bureau of Reclamation have completed our analysis of the document to our satisfaction; however, as requested, we are enclosing a copy of the latest document which is the one we are currently analyzing.

Our analysis, with supporting papers, will be sent to you as soon as we are satisfied with its quality.

Sincerely yours,

RUSSELL E. TRAIN,
Acting Secretary of the Interior.

[Enclosure]

GLACIER ELECTRIC COOPERATIVE, INC.,
Cut Bank, Mont., March 19, 1970.

Hon. MIKE MANSFIELD,
U.S. Senate Building,
Washington, D.C.

DEAR SENATOR: Attached is a copy of a letter which I received from Mr. James R. Smith on Thursday a.m.

From the last sentence it is obvious from the wording that the Bureau has approved the contract between the Bureau and the Montana Power Co. as submitted to the Washington office even though it may not be executed as yet.

We have all expressed our objections to this contract as being bad for the Bureau and I would appreciate receiving a copy of Mr. Smith's letter to you when he does inform you of the Bureau's decision since he has seen fit to announce it through me first.

I do not understand the Secretary's position in regards to BPA service. Glacier Electric Cooperative certainly qualifies for BPA service under Public Law 88–552.

If the Montana Power Co. connects with Glacier facilities at Cut Bank, then BPA certainly has a route to deliver power to Glacier.

Vigilante Electric Cooperative, Inc. is receiving BPA power on the east side of the Continental Divide by having BPA power wheeled over Montana Power Co. lines under this law. In the case of Vigilante it had to break a power contract with the Power Co. to receive BPA service, yet Glacier can not receive favorable consideration from a public agency that should be friendly to it. It is difficult to understand the attitude of the Bureau, in fact I just can't.

Very truly yours,

C. W. BROWN, *Manager.*

U.S. DEPARTMENT OF THE INTERIOR,
OFFICE OF THE SECRETARY,
Washington, D.C., March 13, 1970.

Mr. CLYDE BROWN,
Manager, Glacier Electric Cooperative, Inc.,
Cut Bank, Mont.

DEAR MR. BROWN: On December 17, 1969, you made formal application to the Bonneville Power Administration for electric power service. This matter has been discussed with the Bureau of Reclamation and Bonneville Power Administration. The marketing of BPA power in Montana is prescribed by the Secretary of Interior as that area west of the Continental Divide; therefore, you should continue to look to the Bureau of Reclamation to obtain a supply of power available from the Federal power facilities.

The Bureau has stated that the requirements of its preference customers can be met through 1973. We are currently evaluating the availability of Bureau power beyond this date to serve preference customers load through 1977 or possible 1978 on a long term basis. In this regard we believe a long term contract with the Bureau should be executed. This would assure your power supply as well as protect the Bureau's investment in transmission and generation facilities *and its committment for an annual transmission charge* under arrangements with Montana Power Company.

Sincerely yours,

JAMES R. SMITH,
Deputy Assistant Secretary of the Interior.

MARCH 25, 1970.

HON. WALTER HICKEL,
Secretary, Department of the Interior,
Washington, D.C.

Assistant Secretary James Smith's letter of March 13 to Clyde Brown, manager of General Electric Cooperative, Inc., Cut Bank, Mont., has come to our attention. Extremely concerned about content indicating that department may have already agreed to contract with Montana Power Company in matter of constructing transmission line from Great Falls to Browning. Letter states, "This would assure your power supply as well as protect the bureau's investment in transmission and generation facilities and its commitment for an annual transmission charge under arrangements with Montana Power Company."

Also informally advised contract being circulated in field. If this decision has been made, it has been done without assured consultation with Montana congressional delegation and to our knowledge, the Senate and House subcommittees on Public Works Appropriations. Has a contract been approved? Has there been a breach of our original understanding? We are still deeply concerned about lack of evidence supporting company plans which will meet reliability requirements for elaborate and technical ABM installation now underway in Northcentral Mon-

tana. This aspect of negotiations should perhaps be referred to committees on armed services for further review and consultation. Immediate reply regarding disposition of transmission line negotiations imperative. Regards.

Senator MIKE MANSFIELD.
Senator LEE METCALF.
Congressman ARNOLD OLSEN.
Congressman JOHN MELCHER.

Senator METCALF. Mr. Chairman, of course I am delighted to have my colleague before this committee. His contribution to electric energy in this area is not just a recent one. The fact that we have a transmission line from Havre to Shelby is a result of his activity in the House of Representatives.

He mentioned the Hungry Horse project, which puts the whole State of Montana, east and west of the Continental Divide, into the Bonneville marketing area, and he was the person responsible for having that originally written into the Hungry Horse project.

So your concern with electric power and electrical reliability has been a concern that I can recall even before I came to Congress and was an interested bystander out in the State of Montana.

I think you pointed out largely the main area but I want to emphasize as I know that you do this business of reliability. We are going to put a Safeguard in that area. We should have the most reliable power system in America, and whether we wanted to put it in or not, we are concerned that if it is an integral part of our defense system that the power supply be as reliable as can possibly be made.

So I think that that is a strong point, although during the course of this hearing with the chairman's permission I will bring out some questions from the Department of the Interior and others that will amplify some of the problems that you have raised in your statement.

Senator MANSFIELD. Thank you, Senator.

Senator ANDERSON. Senator Jordan.

Senator JORDAN. No. I just want to thank our colleague for a very fine statement.

You have raised some questions that we, I am sure, will propound to others about some of these matters you have discussed.

I am interested, too, as you are in seeing a national power system implemented because I think therein lies the answer to the problem we face; as a matter of fact, that we have had to endure from time to time, and I commend you for it.

Senator MANSFIELD. Thank you, Senator.

Senator ANDERSON. Senator Burdick.

Senator BURDICK. I want to thank our colleague for his contribution here this morning. You have been talking primarily about the area west of the Continental Divide.

Senator MANSFIELD. That is right. That is why I suggested that we ought to give the most serious consideration to shipping power from the Booneville bridge system, especially Hungry Horse which will be completed shortly, over into the eastern part of the State, because I hate to see Montana's resources developed for too much of the benefit of our sister States, Washington and Oregon, but Washington most especially.

Hungry Horse has approximately 200,000 kilowatts of power allocated to Montana. Libby will be a much larger project. We think that some of that power ought to be shipped east of the Divide so

that the State of Montana which experiences so much of the initial power and all too often it is used as a reservoir for the other States, not including Idaho may I say, which should be given its consideration which is its proper due because it is the original source from which this original energy comes and is responsible for upping the energy to Grand Coulee and other dams ouside the State of Montana.

Senator ANDERSON. Senator Hansen.

Senator HANSEN. I have no questions, Mr. Chairman.

Senator ANDERSON. Thank you, Senator, for a fine statement.

Senator MANSFIELD. Thank you, Mr. Chairman and gentlemen of the committee. I appreciate this opportunity to appear before you and to give you the benefit, such as they are, of my views.

Senator ANDERSON. Mr. Melcher.

Senator METCALF. Mr. Chairman, may I just welcome to the committee one of the newest of our colleagues, Congressman Melcher, who was elected in a special election last year and has already demonstrated a concern and an interest in the House of Representatives. Delighted to have you, and hope you come many, many times.

Mr. MELCHER. Thank you, Senator.

STATEMENT OF HON. JOHN MELCHER, A REPRESENTATIVE IN CONGRESS FROM THE STATE OF MONTANA

Mr. Chairman and gentlemen of the committee, I want to express my appreciation to this committee for exercising its oversight function in relation to power supply in the Northwestern States and holding this hearing. Congress has made it clear that it is interested in this proposed contract.

The proposed contract only arrived at my office an hour ago, which is dated with a covering letter of March 28 and contained in an envelope that obviously had been folded after my name was typed on it and belatedly arrived the morning of the opening of this hearing. This may become the hearing that prevented the Bureau of Reclamation, which historically has a proud record of resources development in the West, from becoming a partner in the obstruction of development. The copy of the proposed contract between the Bureau of Reclamation and the Montana Power Co. for transmission of Bureau power to the Conrad-Browning-Cut Bank area which I have been shown by others, and now have a copy of——

Senator BURDICK. May I ask him to identify that. Is that a copy of the contract that was signed by the Montana Power Co. by J. H. McElwain, vice president?

Mr. MELCHER. The copy of the contract I have is not signed by the cover letter dated March 28 from the Department of the Interior, does state that it has been signed by Mr. McElwain.

Now this contract would do considerably more than provide for Bureau use of transmission capacity in the company line.

I want to point out that, as the committee well knows, this is an area called the golden triangle area of Montana, which covers eight counties. In size it is almost 20,000 square miles, which is double the size of Maryland and larger than our nine smallest States.

The contract would (1) usurp the power of this committee and the Congress to make electric energy supply policy for the area in the future, and (2) give the private company a monopolistic control over

energy supply—and therefore over economic development opportunity—in the affected area.

The purpose of any contract for transmission capacity must be only the assurance of abundant electric power to meet present, future, and development needs of the area. Transfer of control over future transmission into an area has no place in any Bureau contract. The Bureau and the Department of the Interior should zealously exclude political consideration in drawing the contract and consider foremost the future needs of electric power in this area of Montana.

The contract I have seen is a short-sighted, restrictive contract which ignores both the economic development needs of the area and the economic development probabilities.

A new process of power generation from coal, magnetohydronamics, is in development which promises to make western Montana the source of very low cost energy from fossil fuels with a minimum of environmental pollution, and with reclamation of the land.

This is a possibility of eastern Montana providing the source of energy tying into a national grid system where the system energy can also go to the West if it is needed.

No contract which might restrict availability of this power to any area in Montana, or to areas west of us, should be considered for a moment.

Very much involved in this contract is the reliability of electric service to one of our two approved ABM missile sites, in which this Nation will have a colossal defense investment. While it will have its own standby generating capacity, it could still be made doubly secure by planned, and adequately-sized loop transmission into the area.

Just enough transmission to "get by" is simply not adequate in this area, and it should not be in any other area.

We should be planning and building lines that assure reliability and provide for growth. Lip service to giant transmission is not enough, particularly if it is followed by contracts for more minitransmission. We need maxitransmission, not minitransmission which barely does the job.

We have settled for just enough transmission to "get by" in this Nation for so long we are confronted with national brownouts and interruption of service across all of the land.

It is time for Federal power agencies to set an example of provision of adequate capacities to assure abundance and reliability.

I urge this committee to insist on early Bureau of Reclamation construction of transmission into the Browning area, jointly planned by all parties at interest including the electric cooperatives.

The pending Bureau-Montana Power Co. contract should not be executed unless and until it is:

(*a*) Revised to be a simple contract for Bureau use of surplus transmission capacity for a proper monetary consideration;

(*b*) There has been deleted any monopolistic control over future of the area; and

(*c*) The rights of the citizen-consumers of the area to have a voice in their power supply is not abridged by political considerations and pressures.

Thank you, Mr. Chairman.

Senator ANDERSON. Thank you, Mr. Melcher.

Senator METCALF. Congressman Melcher, again I am glad that you have appeared and made a forceful and forthright statement. You have raised some questions that will need to be considered by this committee. I know that, as I said to the majority leader during the course of this hearing, these questions will be presented to appropriate representatives from the Interior Department and others. We will try to find the answers; that is the purpose of the hearing.

Thank you for giving us the benefit of your views and some of the ideas that you have as to what really should happen in the development of this very important area of Montana.

Mr. MELCHER. Thank you, Senator.

Senator ANDERSON. Senator Jordan.

Senator JORDAN. I have no questions.

Senator ANDERSON. Senator Burdick.

Senator BURDICK. Mr. Chairman, I too, would like to welcome my neighbor to the west to this committee this morning.

You referred to availability of power in eastern Montana. Are you concerned or are you interested, do you have under consideration some transmission lines that serve extreme western North Dakota and Montana above Yellowstone?

Mr. MELCHER. We certainly are, Senator. North Dakota and Montana have asked for quantities of lignite coal which is being used now for development of electrical energy and our potential there is great. We will become fully an export area of energy within the next few years.

Senator BURDICK. Are you aware of the need for transmission lines in that area?

Mr. MELCHER. I certainly am, Senator.

Senator BURDICK. In some aspects it is a problem similar to western Montana.

Mr. MELCHER. That is true, sir.

Senator ANDERSON. Senator Hansen.

Senator HANSEN. Thank you, Mr. Chairman.

Congressman Melcher, I am pleased to have you demonstrate the interest that your presence here illustrates.

Referring to the second page of your testimony, you speak about the new process of power generation from coal, magnetohydrodynamics. In your opinion, how quickly is this process likely to be made feasible and practical?

Mr. MELCHER. I would hope that the Congress will appropriate a substantial sum greater than what the President's budget has asked for. He has asked for $400,000 for the initial appropriation for a pilot plant. I would hope that this would be increased to two and a half to three million dollars, and that a big step would be taken this year, and that within 4 or 5 years we would have a pilot plant built, and have many of the bugs worked out of the process so that within the next half dozen or 7 years we could anticipate a real development to the MHD process for utilizing our coal resources in your State, Senator, as well as mine in North and South Dakota.

Senator HANSEN. As you know, we too share in Montana's interest in the development of this process. Have you seen any industry projection as to the time lapse—assuming that the appropriation were to be made that a full-scale pilot plant were brought into operation and everything went on schedule—how far away in your judg-

ment would be the significant production of the electrical energy from this process?

Mr. MELCHER. I have been advised by industry people that they feel that within 5 years a pilot plant could be constructed and on line and that within a very short number of years after that there would be the possibility of many other plants.

Senator HANSEN. That would be as close as you could come in indicating the lapse of time before we would actually be able to use electricity from the ongoing plant?

Mr. MELCHER. I think with proper resolve and perseverence on the part of Congress and industry working together we could shorten this by 2 or 3 years and we could have a definite contribution made by the MHD process in 5 or 6 years, but it would take definite, positive steps forward this year and the next 2 or 3 years following.

Senator HANSEN. Do you know if your appraisal of the possibilities is shared by industry representatives?

Mr. MELCHER. Yes. I talked to Avco Corp., for one, and my understanding of their judgment on it is this.

Senator HANSEN. I have one further question: We certainly hear a great many people expressing extreme interest in reliability of power. Do you know what the survey that was taken following the massive brownout in the East disclosed insofar as the reliability of power goes in the country today, how reliable this power is? Do you have a percentage figure which would indicate that figure?

Mr. MELCHER. No, I have no intimate knowledge of it, Senator. I suppose I share, along with the general public, an apprehension that our power needs are growing so quickly that we are jeopardizing the reliability across the Nation.

Senator HANSEN. You would not want to hazard any guess as to the reliability of power?

Mr. MELCHER. No, I would not want to do that, Senator. I do not have the technical knowledge to be expert in that field.

Senator HANSEN. If I recall correctly, and I am not certain that I do, I think it is in the 98- to 99-percent bracket right now. Following that brownout I did see some studies that were made, and how accurate or authoritative they may have been I don't know. I was impressed with this figure like everything else when we tried to squeeze out that last small fraction of human error or mechanical error, or whatever may result in bringing about the power failure. When you try to squeeze that last bit of margin out it becomes extremely expensive. Would it be your recommendation that we try to make the reliability of power in this country nearly 100-percent effective?

Mr. MELCHER. I think as near as possible, of course, we should. I think what has created a great deal of apprehension in this country is the fact that our power needs grow so rapidly year by year that the continual effort must be made to provide abundant sources of energy for us and the grid systems that will make sure that the abundance can be shared and meet any emergency that we might be faced with.

Senator HANSEN. I don't disagree at all with that statement insofar as a public policy is concerned, but I am not certain, at least I don't believe it responds precisely to my question. Do you think that we ought to spend a rather considerable sum of money in order to try to

make the difference between the last 1- or 2-percent power failures that are now impairing our system?

Mr. MELCHER. Senator, I would say generally that I think we should. Of course, I would want to know the amount of money involved but I think generally my answer would be yes, emphatically yes.

Senator HANSEN. Thank you very much.

Senator ANDERSON. Thank you, Senator Hansen.

Senator METCALF. Mr. Chairman, may I out of order give you just a brief explanation before the witness leaves?

He identified a contract. Now this contract has not been entered into and both he and I have copies of the contract that we have obtained. I guess he got his this morning. I have obtained mine not from Interior but from other sources. I would like to be sure that we are talking about the same contract.

Now Mr. Joe McElwain, from the Montana Power Co., is here as an observer and he told me that he was ready to answer any questions. I wonder if we could have Mr. McElwain come forward and identify the contract so that we know the contract we are talking about.

Senator ANDERSON. Mr. McElwain.

Mr. MCELWAIN. Mr. Chairman.

Senator METCALF. Mr. J. H. McElwain, vice president of the Montana Power Co.

Mr. MCELWAIN. Mr. Chairman, I believe those two contracts are the same. One is unsigned and one in fact has a facsimile of my signature on it. I believe also, Mr. Chairman, that I would like to have an opportunity, if there is time later on, to make a few comments.

Senator ANDERSON. Will it be long?

Mr. MCELWAIN. I don't care to make full comment now. When the other witnesses are through I would be happy to make a few comments.

Senator ANDERSON. Thank you.

Senator BURDICK. Mr. Chairman, in order that we have the contract, I offer as an exhibit a contract which I will mark exhibit A.

(The document marked exhibit A follows:)

EXHIBIT A

CONTRACT BETWEEN THE MONTANA POWER CO. AND THE UNITED STATES OF AMERICA, DEPARTMENT OF THE INTERIOR, BUREAU OF RECLAMATION

TRANSMISSION SERVICE TO SHELBY-CUT BANK-BROWNING AREA

This Contract, made this _____ day of _____, 19____ in pursuance of the Act of Congress approved June 17, 1902 (32 Stat. 388), the Act of Congress approved December 22, 1944 (58 Stat. 887), and Acts amendatory thereof or supplementary thereto, between THE UNITED STATES OF AMERICA, hereinafter called the United States, represented by the Officer executing this contract, his duly appointed successor, or his duly authorized representative, hereinafter called the contracting officer, and THE MONTANA POWER COMPANY, a corporation duly organized, created, and existing under and by virtue of the laws of the State of Montana, hereinafter called the Contractor, its successors and assigns,

WITNESSETH:

Whereas, the Contractor has constructed a 115-kv transmission line from its switchyard near Great Falls, Montana, to its substation located near Cut Bank, Montana, and

Whereas, the United States requires additional transmission capacity to provide reliability and to serve its electric loads in the Shelby-Cut Bank-Browning area

and has proposed to construct a 161-kv transmission line from Great Falls to Browning, and

Whereas, the Congress of the United States has appropriated the sum of $450,000 to institute construction of said Great Falls-Browning line. However, the Appropriations Committees of the House and Senate have requested that the Bureau of Reclamation resume negotiations in an effort to reach satisfactory transmission arrangement with the Contractor, and further directed that the Bureau report to the House and Senate Appropriations Committees and secure prior clearance before any of the $450,000 is expended for initiation of construction of the Great Falls-Browning line, and

Whereas, the Contractor's line has capacity surplus to its present needs and the Contractor is willing for the United States to utilize such capacity to provide reliability and to serve the Bureau of Reclamation's preference customers in the Shelby-Cut Bank-Browning area, and

Whereas, the Appropriations Committee of the House of Representatives believes any agreement between the parties should (1) assure reliable service and guarantee adequate capacity of the Company's line to provide for the load growth of the cooperatives until 1980; (2) make provision for adequate prior notice to the Company for installation of any additional facilities that might be needed to serve load growths; and (3) be cancellable upon reasonable notice if the Company declines increased wheeling capacity limits;

Now, therefore, in consideration of the mutual covenants and agreements herein contained, the parties hereto agree as follows:

(1) Starting with the effective date of this contract, the Contractor will make available to the United States at Cut Bank, Montana, whatever capacity of Contractor's 115–KV transmission line is required to provide reliable service and to provide for the load growth of the preference customers of the Bureau of Reclamation in the area.

(2) The United States transmission system is already interconnected with the Contractor's facilities at the Contractor's switchyard at Great Falls, Montana, and the United States will not have to install any additional facilities at Great Falls at this time for the purpose of this agreement.

(3) The Contractor will install or cause to be installed facilities necessary for making connection from the Contractor's substation near Cut Bank to Glacier Electric Cooperative's Cut Bank substation, said facilities to be approximately two and one-half (2½) miles of 115–KV transmission line, an oil circuit breaker bay complete and metering equipment having an estimated total installation cost of $110,500. This requirement shall be dependent upon the Glacier Electric Cooperative, Inc. agreeing to the interconnection of its facilities with the facilities of the Contractor, provided, however, that the United States and the Contractor will diligently attempt to obtain such agreement from the Glacier Electric Cooperative, Inc.

(4) The Contractor agrees to accept delivery of electric power and energy from the United States, regardless of the origin, source, ownership, or type of generation used to produce such power and energy, at the present point of interconnection near Great Falls and deliver an equivalent amount of electric power and energy, less seven percent (7%) losses, to the United States at 115 kv. at the Glacier Electric Cooperative's Cut Bank substation, limited to the transmission capacity of the Contractor's line(s). Said transmission losses and capacity limitations shall apply to deliveries agreed to between the two parties to this contract, and metered at the Contractor's metering facilities at Cut Bank, Montana. Said losses and capacity limitation shall not apply to inadvertent flows or emergency flows during line outages. Scheduling and energy accounting shall be in accordance with accepted procedures and practices in interconnection accounting.

(5)(a) The United States undertakes and agrees to pay to the Contractor as a transmission facilities charge for the use of said 115-KV line from the Contractor's switchyard near Great Falls to Contractor's Cut Bank switchyard, commencing on the date that an interconnection is established between Glacier Electric Cooperative, Inc. and the Contractor, as follows:

Period	Payment
From date of interconnection at Cut Bank to Dec. 31, 1975.	$5,500 per month.
For each year from Jan. 1, 1976, to termination of contract.	The larger of $5,500 per month or L—38,000 kw./50,000 kw. equals $11,000 per month.

Where L=the sum of the estimated annual peak kw loads of area preference customers of the United States as contained in then current 4-year estimates; *Provided,* That, the United States will provide the Contractor with a 4-year estimate of said area preference customer peak loads by June 30 of each year, and said estimates shall be used in determining factor L.

(b) In addition to the above charge, the United States undertakes and agrees to pay to the Contractor for the use of the interconnection facilities between the Contractor's substation and the Glacier Electric Cooperative, Inc.'s substation to deliver power to its preference customers, the sum of Six Hundred and Ninety Dollars ($690) per month during the term of this agreement, said payment to commence on the date an interconnection is established.

(c) These shall be the only charges for power and energy deliveries made pursuant to this contract and such charges shall continue in effect until this agreement is terminated pursuant to the provisions of Article (7) or (8) hereof, so long as the facilities of the Contractor and Glacier Electric Cooperative, Inc. remain interconnected.

(6) The parties hereto agree from time to time to jointly plan and review load forecasts to determine the necessity of additional transmission facilities as required in the area.

(7) The United States upon four years notice to the Contractor may request the installation of any additional facilities that might be needed to serve load growths of its customers in the area, and the Contractor shall agree or decline within ninety days from receipt of said request. In the event the Contractor declines to provide such additional facilities, the United States may cancel this agreement upon not less than four years notice of receipt of such declination. In the event additional facilities are agreed upon, such facilities shall be subject to an additional equitable annual charge as may hereafter be agreed to by the parties hereto.

(8) This contract shall continue in force and effect from its effective date until or unless one of the parties gives the other party at least four years prior notice of termination of said contract; *Provided,* That said notice shall not be given prior to December 31, 1976, except as otherwise provided in Article (7).

(9) This contract shall become effective on the date of execution, subject to the provisions of Article (3) hereof.

In witness whereof, the parties hereto have caused this contract to be executed the day and year first above written.

THE MONTANA POWER CO.

By_____

Vice President.

THE UNITED STATES OF AMERICA,
DEPARTMENT OF THE INTERIOR,
BUREAU OF RECLAMATION.

By_____

Regional Director.

Attest:

_____

Secretary.

Senator ANDERSON. Mr. Ellis L. Armstrong, Department of the Interior, Commissioner, Bureau of Reclamation.

STATEMENT OF ELLIS L. ARMSTRONG, COMMISSIONER, BUREAU OF RECLAMATION, DEPARTMENT OF THE INTERIOR, ACCOMPANIED BY WILLIAM H. KEATING, ACTING ASSISTANT COMMISSIONER FOR POWER AND ENGINEERING, DEPARTMENT OF THE INTERIOR

Mr. ARMSTRONG. Mr. Chairman and members of the committee, I have with me this morning Mr. William Keating, who is the Acting Assistant Commissioner for Power and Engineering in the Bureau of Reclamation.

We are here at your request to discuss the electric service to the Montana cooperatives in the area of Shelby, Cut Bank, and Browning, Mont.

44-439—70——4

Funds have been requested for construction of Federal facilities for service in this area and last year the Appropriations Committee directed us to negotiate with Montana Power Co. to provide wheeling services in this area.

Quoting from the instructions that they gave us, and this is Report No. 90–548 on page 77, at the bottom of the page:

> The Montana Power Company has initiated and is nearing completion of a 115 kv line from Great Falls to near Cut Bank, Montana, in the vicinity of Browning. As it appears that the Company facilities could provide substantially the same benefits as a Federal line until 1980 when the cooperatives are to be served at Browning by the Bonneville Power Administration, the committee questions the expediency of the investment in the interim in a Federal line in lieu of payment of an annual wheeling charge estimated at about $66,000. Before construction of the Federal line is undertaken, therefore, the committee requests that negotiations be resumed in an effort to reach a satisfactory wheeling arrangement with the Company. The committee believes the agreement should (1) assure reliable service and guarantee adequate capacity of the Company's line to provide for the load growth of the cooperatives until 1980; (2) make provision for adequate prior notice to the Company for installation of any additional facilities that might be needed to serve load growths; and (3) be cancellable upon reasonable notice if the Company declines increased wheeling capacity limits.
>
> In the event no satisfactory agreement can be reached, the Bureau of Reclamation is directed to report to the committee and secure prior clearance before any of the $450,000 available is expended for initiation of construction of the Federal line.

Senator ANDERSON. Is this in the House report?

Mr. ARMSTRONG. Yes, and the Senate report.

Senator ANDERSON. The Senate provisions were comparable?

Mr. ARMSTRONG. Yes. The Senate provision substantiates that.

Now we have negotiated with the company for quite a while, and diligently, and have discussed our results with the Montana people and as a result of their request have held further discussions with the company. We have negotiated the contract which is economically advantageous to the United States and does provide facilities which in concert with existing Federal facilities will provide for the delivery of power equal to the load growth of the customers through 1980.

At the request of this subcommittee we have withheld action pending this hearing. We are now ready to execute the contract and plan to do so as soon as the final versions of the contract are prepared.

Now, as I quoted from the committee report on the Public Works Act of fiscal year 1970, the Appropriations Committees of the Senate and House instructed us to resume negotiations with the Montana Power Co. in an effort to obtain a wheeling contract containing these three specific conditions. This contract was to be in lieu of the Bureau constructing a transmission line from Great Falls to the Browning area. We did negotiate and carry through on the contract and the company on March 4, 1970, approved a contract which provides for three specific conditions:

First, it provides for reliable service and adequate capacity to meet load growth of the cooperatives until 1980. The Havre-Shelby-Cut Bank-Browning line and the Wheeling arrangement from Great Falls to Cut Bank will enable the delivery of approximately 85 megawatts of load. The customer load in 1980 is estimated to be 69 megawatts.

If the Bureau's and the company's views on a question of reliability cannot be resolved, the dispute will be submitted to a Board of Arbitration with one representative from the company, one from the Bureau, and one would be appointed by the Western Systems Coordi-

nating Council. The Board's decision on reliability will be binding on the Bureau and the company.

Then the second provision provides adequate notice to the company for installation of additional facilities. It provides notice by the United States to the company on need for additional facilities, it allows the company 90 days in which to indicate whether or not it will build. And if the company has not agreed within 90 days, the United States may cancel the contract upon not less than 4 years' notice.

Third, the contract shall be cancellable upon reasonable notice if the company declines increased wheeling capacity limits. The United States may terminate contractual arrangements upon 4 years' advance notice giving the United States time to provide facilities on its own, and notice not to be given prior to December 31, 1976.

This contract is economically advantageous to the United States as compared to Federal construction. Under the contract annual costs to the United States would be $66,000 plus $8,000 if the company furnishes the interconnection facilities in the Cut Bank, Mont. area for a total of $74,000 a year. The alternate cost of a Federal 161 kilovolt line to Browning using current applicable interest rates in January 1970 would be $293,000, or about four times the yearly cost under the wheeling arrangement.

This line would cost the Government approximately $4 million to build. In these days of tight money and the competition for the Federal tax dollar, such a saving is important.

Senator BURDICK. Mr. Chairman, I wonder if I could interrupt just for one reason. I have to vote on the direct popular vote in the Judiciary Committee in a few minutes. I would like to ask the gentleman a question at this point. May I?

Senator ANDERSON. Surely.

Senator BURDICK. Would you please provide the committee with the derivation of your annual cost figures including the assumption concerning capital investment, amortization periods, interest rates and so forth, to enable the committee staff to compare your analysis to the others which have been suggested? Would you prepare that for the committee?

Mr. ARMSTRONG. Yes.

Senator METCALF. Mr. Keating, do you have that?

Mr. KEATING. Yes, sir.

(The information referred to above follows:)

Great Falls—Browning 161 kv line and substation

Line:	
Length—110 miles (wood pole, 556.5 mcm acsr):	
Investment	$2, 620, 000
O. & M. at 160 per mile plus 15 percent overhead	20, 240
Repl. at .0015 times investment	3, 980
Amortization at 50 years 4⅞ percent (.05372)	140, 746
Substations:	
Great Falls—161 kv. breaker and switching bay:	
Investment	$750, 000
O. & M. at .03 times investment	22, 500
Repl. at 0.9 0.0087 times investment	5, 870
Amortization at 50 years 4⅞ percent (.05372)	40, 290
Browning—50,000 kva. transformer and 161/115 additions to existing Coop. Blackfoot Sub.:	
Investment	$550, 000
O. &M. at 0.03 times investment	16, 500
Repl. at 0.9 times 0.0087 times investment	4, 310
Amortization at 50 years 4⅞ percent (.05372)	29, 546
IDC (4⅞ percent) amortization, $180,000 times .05372	$9, 668

Total annual costs

Total	$293, 650
O. & M	59, 240
Repl	14, 160
Amortization	220, 250

NOTE.—Submitted by the Bureau of Reclamation, Apr. 23, 1970.

Senator ANDERSON. The contract has been negotiated or not negotiated?

Senator METCALF. The contract has been written——

Mr. ARMSTRONG. I will explain, Mr. Chairman. That was the first agreement.

Senator ANDERSON. Who negotiated the contract?

Mr. ARMSTRONG. The Bureau of Reclamation with the Montana Power Co.

Senator ANDERSON. When was the negotiation finished?

Mr. ARMSTRONG. March 4. That was the time that the Montana Power agreed to the provisions of this first contract.

Senator ANDERSON. The contract has not been signed?

Mr. ARMSTRONG. It has not been signed; no, sir.

Senator ANDERSON. What is holding it?

Mr. ARMSTRONG. It is agreed to by the Montana Power.

Senator ANDERSON. And not by the Bureau of Reclamation?

Mr. ARMSTRONG. No, because we were continuing negotiations to meet the needs and the requirements of the co-ops. They didn't agree to some of the provisions, as I will explain.

That is, you see, subsequent to these negotiations, meetings were held to discuss the contract in the field and in Washington with the interested cooperatives. These cooperatives found certain provisions and certain features of the contract to which they were not agreeable and their suggestions would essentially limit the contract term to 4 years, whereas the contract originally negotiated with the company could not be canceled until 1980. The cooperatives also requested more definitive provisions on joint planning and load forecast review by preference customers, which review and planning would determine the necessity of additional transmission facilities.

The representatives of the three cooperatives worked with us and agreed on these principles. They were acceptable to us and now we are informed by the Montana Power Co. that they are acceptable to them.

Now the regional plans——

Senator ANDERSON. Why can't they sign up for them?

Mr. ARMSTRONG. Well, we have not got it shaped up in final form yet, Senator. Then of course we were requested by this committee to delay until after this hearing.

Senator METCALF. Mr. Chairman, as I understand it, then, the contract that you propose to sign is substantially different from the contract that has been inserted in the record.

Mr. ARMSTRONG. The first contract, yes. It is different in these provisions that I just mentioned.

Senator METCALF. So that when we are talking about the contract that Congressman Melcher testified to and that I have inserted in the record, we are not talking about the contract that you are presently negotiating?

Mr. ARMSTRONG. That is correct. That is the contract that we finally reached an agreement on with the power company before we met with the cooperatives to get their viewpoints and incorporated their views into the contract.

Now the original plans for additional transmission capacity in the area were developed to meet our responsibility for reliable service to the cooperatives in the Shelby area. Our original program was to increase the reliability of our system by constructing a line from Great Falls to Shelby which would have provided loop service in place of then existing stub line service from Havre to Shelby.

We changed our plans to consider the area served by the cooperatives west of the termination of line at Shelby in order to allow the cooperatives to provide more reliable service in the area in which they maintain transmission service. The question has been whether we should accept wheeling over the 115 kv Great Falls-Cut Bank transmission of the Montana Power Co. or over a federally constructed 161 kv transmission facility from Great Falls to Browning.

Either of these lines meets our responsibility to provide better service to Shelby, the point at which the cooperatives assume responsibility for the transmission westwardly. Wheeling service over the Montana Company Power Co. line would increase the reliability of over 23 miles of the cooperative's 115 kv system. The Federal line would provide a greater degree of reliability for an additional 33 miles of the cooperative's 115 kv system.

We could not deny that if both lines were constructed more reliable service would be provided, but our decision has not been whether both lines should be built but which arrangement now warrants the expenditure of Federal funds.

No one can predict load growth in specific areas with a high degree of accuracy. If loads continue to grow in the area, additional facilities may be needed and when they are needed a decision as to exact locations and capabilities can be made.

I would like to point out that under some criteria of reliability a system could be required to withstand the loss of the major or largest facilities in the area without serious damage to the adjacent system. The loss of the 161 kv line with its greater carrying capacity will have a more serious effect on the service to the area than would the loss of the 115 kv line.

Some might be inclined to point out that building a 161 kv system gave a greater base to build on in the future but the building of additional capacity prior to its need for load carrying capacity is not always the most prudent decision based on economics and engineering.

That, Mr. Chairman, explains the position that we have and the procedures that we have gone through to this stage.

Senator ANDERSON. Senator Metcalf.

Senator METCALF. Mr. Chairman.

You quoted from the Appropriation Committee Report which sets forth the criteria that has been established by the Appropriation Committee of the House and subsequently approved, Senator Anderson, by the Senate Appropriation Committee for determination as to whether or not the Federal line should be built or whether there should be an acceptance of the existing Montana Power Co. 115 kv line.

The report suggests that the House Appropriations Committee believes that the co-ops in this area are going to be served by the Bonneville Power Administration by 1980. Has this proposal and this report and your decision been submitted to the Bonneville Power Administration?

Mr. ARMSTRONG. This was the wording of the committee report, Senator.

Senator METCALF. Has the Department of the Interior gone to the Bonneville Power Administration and asked for its opinion as to whether or not the 161 kv line should be built?

Mr. ARMSTRONG. The Bonneville Power Administration is part of the Department of the Interior.

Senator METCALF. Then you are speaking for the Bonneville Power Administration when you are testifying before this committee this morning?

Mr. ARMSTRONG. No, sir; I am speaking for the Bureau of Reclamation.

Senator METCALF. Let me go back. Has the Bonneville Power Administration been consulted as to whether or not there should be a 161-kilovolt line or whether there should be the contract entered into with the Montana Power Co.?

Mr. ARMSTRONG. I think I can refer you to Assistant Secretary Smith's testimony when he stated to the Appropriations Committee this year:

> I see no justification for extending the Bonneville Power Administration marketing area east of the Continental Divide.

Senator METCALF. That does not answer the question.

The question was: In your determination as to the economics and the feasibility and the reliability of this line, have you consulted the Bonneville Power Administration?

Mr. ARMSTRONG. There have been discussions, I am sure.

Senator METCALF. Now what was the result of the discussions? What was the opinion of the Bonneville Power Administration?

Mr. KEATING. May I answer you?

Senator METCALF. Yes, sir. I just want to know what the Bonneville Power Administration feels about this.

Mr. KEATING. This line is constructed in an area east of the Continental Divide, where the U.S. Bureau of Reclamation has responsibility for transmission. Now we did not discuss with Bonneville Power Administration the reliability of that area east of the Continental Divide. I have myself discussed with Bonneville Power Administration the problem of service in that area but we have not discussed the line itself with Bonneville.

Senator METCALF. You heard Senator Mansfield testify, you were sitting in the front row this morning, where he told about how he was the author of the Mansfield-Hungry Horse-Bonneville extension to all of Montana. That has subsequently been rewritten into the law by this committee so that all of Montana east or west of the divide is a part of the Bonneville Administration. Isn't that correct?

Mr. KEATING. I heard the Senator and I am not familiar with what he was referring to. If this was the language that authorized the Hungry Horse construction, I most certainly agree.

Senator METCALF. Are you telling me this morning that you don't know what Bonneville Power Administration has jurisdiction over all of Montana?

Mr. KEATING. I would most certainly say I not only do not know it, I do not agree with it. There must be language that I am not completely familiar with if this is the case.

Senator METCALF. Well, Mr. Chairman, I get awfully impatient when we ask for Mr. Smith to come up here and he refuses to testify, and he sends somebody that does not know one thing about the problem with which we are confronted.

Mr. ARMSTRONG. Senator, your request was to discuss this transmission line between Great Falls and Browning, Mont.

Senator METCALF. You cited an Appropriation Committee hearing that said by 1980 this area would be served by the Bonneville Power Administration. I asked you if in view of that decision and suggestion had you discussed this matter and gotten an opinion from the Bonneville Power Administration. You tell me that you don't even know about the fact that Bonneville Power Administration is authorized to serve Montana east of the Continental Divide. In fact, Bonneville Power Administration is today serving Montana east of the Continental Divide.

Mr. KEATING. Yes, sir, I agree.

Senator METCALF. Isn't that correct?

Mr. KEATING. Yes, I agree. They serve one cooperative south of the Browning area, Vigilante.

Senator METCALF. East of the Continental Divide, on the Missouri River.

Mr. KEATING. Yes, and that was so served as the Bureau and Bonneville, agreed there were not adequate Bureau facilities that we could serve Vigilante.

Senator METCALF. Isn't it true that the Bonneville Power Administration line runs through Great Falls, Mont., to serve a special load in Silver Bow County?

Mr. KEATING. Bonneville line? I don't believe they go through Great Falls. The only facilities in Great Falls, I believe, are the substation of the Bureau of Reclamation and the Montana Power Co. Bonneville Power Administration serves Vigilante by wheeling over the company's system, I believe.

Senator METCALF. You don't have an opinion from Bonneville Power Administration?

Mr. KEATING. No, sir.

Senator METCALF. That was the original question, and I finally have an answer.

Secretary Hickel told the Appropriation Committee that the Federal Government has to organize and run a national power grid and he said that he proposed to tie together the present regional grids.

Now isn't one of the needs to tie together the grids the tying together of the Missouri Basin and the Bonneville Power Administration in Montana?

Mr. ARMSTRONG. Yes, it would be.

Senator METCALF. Isn't that a matter of important consideration at this time?

Mr. ARMSTRONG. Well, it is a matter of cost, Senator. Here we are talking about a rather small segment of line and the economics in the

interim period while methods are being determined of how best to meet the load needs.

I pointed out the economics that are involved here and the cost of the two facilities at this time and it does not appear on the basis of prudent judgment that the larger facilities should be built at this time. These additional lines can be built later when the loads build up. In the meantime, we can utilize the facility that is there under contract provisions that give us control and give the cooperatives the service that we are obligated to give them. It boils down simply, as I see it, Senator, to that. This overall problem is something else again that comes a little further down the road, and it can be very well worked into whatever is done now. But the immediate problem is, you see, to provide the capacity for the growing load in this area.

Senator METCALF. So on the basis of reliability and dependable capacity and those three criteria you have ascertained that the economics of this are such that you should enter into this contract with the Montana Power Co.

Now I want to talk to you just a moment about dollars and cents. You said that the cost to the Government at the present time would be $74,000. Is that right?

Mr. ARMSTRONG. The annual cost to the Government under the wheeling arrangement with the Montana Power would be $74,000.

Senator METCALF. That is right. Now if the Government builds a line, which your estimate was $293,000, and you are going to give us the figures on that estimate in response to the question from Senator Burdick——

Mr. ARMSTRONG. Senator, the present estimate of the cost of the line would be the $4 million.

Senator METCALF. But I mean it would cost $293,000 a year.

Mr. ARMSTRONG. Yes. Excuse me. That would be the yearly cost of this facility.

Senator METCALF. And you are going to give Senator Burdick a breakdown on it.

Mr. ARMSTRONG. Yes.

Senator METCALF. Now isn't it true that for the $293,000 the Government gets four times the capacity that you get for $74,000?

Mr. ARMSTRONG. That is right.

SENATOR METCALF. Four times the capacity. You get a loop reliability.

Mr. ARMSTRONG. We will have a loop reliability, Senator, with the wheeling over the Montana Power line.

Senator METCALF. I will ask the other witnesses to amplify on that question.

You say you have the same reliability in this instance.

Mr. ARMSTRONG. Not quite. I pointed out that the western leg, 33 miles of the co-op line, under the proposed construction of the Federal line would have been included within the loop. Utilizing the Montana Power line the west 33 miles would not be included in the loop.

Senator METCALF. Now what happens to the city of Browning in your proposal?

Mr. ARMSTRONG. Browning is the one on the end of the line there, Senator.

Senator METCALF. Browning does not get the service that it would get under the 161 kilovolts?

Mr. ARMSTRONG. It would not have the same reliability—not two lines servicing the town. We would not have the two lines. Two lines of course would provide additional reliability.

Senator METCALF. So for a little less than four times the amount of money we get four times the capacity; we get a line that would fit into a national grid system that would be a part of the Bonneville Administration service area in 1980 that you cite to us and would serve Browning and it is questionable as to the additional reliability. I will ask one of the other witnesses on that.

Mr. ARMSTRONG. Well, Senator, the question is, are we justified in making this expenditure at this time when we can get by for this period of time and meet the loads by utilizing the existing line.

Senator METCALF. You are telling me that in 5 or 6 years then the Bureau of Reclamation proposes to build such a line if the capacity increases?

Mr. ARMSTRONG. Not necessarily. We don't have that amount of power to sell.

Senator METCALF. You have the power that is coming from Libby Dam.

Mr. ARMSTRONG. That is being administered by the Bonneville Power.

Senator METCALF. That is right, and Bonneville Power Administration has authority in spite of—Mr. Keating, I suggest you look up the law before you come up to the committee to testify—in spite of Mr. Keating, the Bonneville Power Administration has jurisdiction and authority to sell power all over eastern Montana. By your own testimony, Mr. Armstrong, this morning, Bonneville Power Administration says they are going to serve these co-ops by 1980.

Mr. ARMSTRONG. No, sir.

Senator METCALF. Read that testimony back, will you?

Mr. ARMSTRONG. That was the——

Senator METCALF. I don't have a copy. You didn't provide the committee with a copy of your statement, but would you read the testimony that you gave?

Mr. ARMSTRONG. I quoted from the report of the Appropriations Committee.

Senator METCALF. Do you agree with that or do you disagree with that?

Mr. ARMSTRONG. Well, it is not my place to agree or disagree. I am just stating what it is.

Senator METCALF. Did you quote it with approval or did you quote it with disapproval?

Mr. ARMSTRONG. Well, I don't have any jurisdiction over the boundary of the area of the Bonneville Power.

Senator METCALF. No, you don't, because it has been set by this committee and Congress.

Mr. ARMSTRONG. But——

Senator METCALF. But if the Appropriations Committee tells you to assure reliable service and to make provision for adequate prior notice for provision of additional facilities which may be cancellable—and you quoted that about approval and that was the criteria that you used—aren't you also concerned when the committee tells you that probably by 1980 the Bonneville Power Administration will be serving the co-ops in this area?

Mr. ARMSTRONG. Surely, and at that time when that thing is worked out then we can better determine what the timing with that would be, or whatever. These are conjectures at this point, and we don't feel that at this time——

Senator METCALF. You are not looking forward to 1980 to see who is going to serve these co-ops?

Mr. ARMSTRONG. We are looking forward surely, but, Senator, we have a problem here. We have an existing line that we can utilize for 4 years or whatever additional time until such future loads are established and such future grids are designed and put into effect.

Senator METCALF. And the new contract is going to provide for 4 years?

Mr. ARMSTRONG. Will provide for being cancellable within 4 years. As I mentioned, you see this is an interim type of arrangement.

Senator METCALF. I didn't have a copy and I just heard you testify as to what the provisions of the new contract are going to be. I would appreciate before we finish that I could be provided with a copy before I have to read the transcript.

Mr. Chairman, it is customary for Interior witnesses with proper notice to come up here with a statement that is in the hands of the committee, especially when they talk about revisions and changes of a contract that we have before us.

Senator ANDERSON. Will you supply a statement of that nature?

Mr. ARMSTRONG. Yes, we can supply it for you.

Senator ANDERSON. Did you?

Mr. ARMSTRONG. No, we did not.

Senator ANDERSON. Why not?

Mr. ARMSTRONG. Well, we just got it put together, Senator, this morning, and we made statements from our notes. We were not quite sure what you wanted to discuss.

Senator METCALF. The Chairman notified the Secretary on April 10.

Senator ANDERSON. We do have a rule that you supply testimony in advance. Are you familiar with that rule? Do you know the rule about testimony in advance?

Mr. ARMSTRONG. No, I didn't.

Senator ANDERSON. There is a provision that we have the testimony in advance. Do you have a statement now? Do you have a copy of the statement you read this morning?

Mr ARMSTRONG. I just have my notes here, Senator, that I spoke from.

Senator METCALF. I hope that in the future the Bureau of Reclamation will——

Mr. ARMSTRONG. I can assure you we will, Senator.

Senator METCALF. Thank you.

I have a letter from the Air Force dated April 8—and, Mr. Chairman, I will put the whole letter in the record, if I may—regarding voltage fluctuations in the east-west tie and he says:

> The great fluctuations in power are causing substantial damage to technical equipment at Opheim Air Force Station and are detrimental to mission performance.

He further states that they have met with the Bureau and a solution has not materialized.

Now I know that Senator Jackson is as interested in the reliability and the voltage fluctuations at Opheim Air Force Station as I am. What is your problem there?

(The letter referred to follows:)

DEPARTMENT OF THE AIR FORCE,
Washington, D.C., April 7, 1970.

DEAR SENATOR METCALF: This is in reply to your recent inquiry to the Secretary of the Air Force in behalf of Mr. Virgil Burdette, Manager, Northern Electric Cooperative, Opheim, Montana, regarding electrical power for Opheim AFS.

Responsible authorities in the procurement office at Malmstrom AFB contracted with Northern Electric to furnish power to the radar site at Opheim AFS. That firm is required to provide regular and uninterrupted service with a maximum voltage variation of plus or minus five percent. However, there have been numerous incidents where the allowable variation was exceeded. The great fluctuations in power are causing substantial damage to technical equipment at Opheim AFS and detrimental to mission performance.

It appears that the voltage fluctuations are in some manner attributable to the nature of the East-West electrical grid tie (Bureau of Reclamation) at Fort Peck, South Dakota. Various utility suppliers are interconnected to this tie including Northern Electric. Meetings have been held with personnel from that firm, the U.S. Bureau of Reclamation at Fort Peck and Watertown, South Dakota, and other interested activities representing the Air Force. However, a solution has not materialized.

Although we are sympathetic to the problems encountered by Northern Electric and their actions with the Bureau of Reclamation to provide the Air Force with uninterrupted service, our contacts must be with the cooperative as it is the contractor.

We hope the foregoing information will serve to clarify the Air Force position in this matter.

Sincerely,

JOSEPH H. RAGOLIA,
Colonel, USAF Congressional Inquiry Division,
Office of Legislative Liaison.

Mr. ARMSTRONG. Yes, sir. These are problems that can be corrected but they take tremendous expenditures to do it, and we have been working with various ways that we can, within reason from the standpoint of cost, take care of these fluctuations.

Now, Mr. Keating has been involved in these discussions.

Would you care to comment further?

Mr. KEATING. Yes, sir, I would.

On the east-west tie the voltage fluctuations come about when the ties are open. There are four lines that tie the United States together at Yellowtail, Fort Peck, Stegall, and just offhand I have forgotten the fourth one. If there is a sudden change in the loading on either side of this tie that is above the capabilities of our tie lines, the ties are open by relay action to keep a serious surge from going across and creating a bigger problem. We have been trying to solve the problem by operating procedures such as new operations and new relays that anticipate power surges. The total cure for the problem of course is major transmission lines of 500 kilovolts or more that tie across this area.

Major lines are some place off in the future, as you gentlemen mentioned. When coal development in Montana, Colorado, Wyoming, and the MHD come about, undoubtedly the larger ties will be built. In the meantime we are striving to do our best through our normal operating arrangements. I suspect that there must be some work on both the part of the cooperatives and the Air Force to install more sophisticated voltage-control equipment on the lower voltage side of these ties to alleviate the problem. We are concerned with it, we know about it, we are not in a position yet to solve it, certainly.

Senator METCALF. I bring this up because if we have a problem such as that at Opheim and we are installing in this triangle area with which we are now concerned tremendously more intricate and sensitive equipment in the ABM, the Safeguard system, it would seem to me that reliability would be a matter of the highest standard.

Have you consulted the Defense Department about the reliability of the two systems?

Mr. KEATING. We have not consulted them with relation to this 115-_or 161-kilovolt line. Most certainly we have met, as has everybody in the power suppliers in the Montana area, with the Corps of Engineers in relation to the Safeguard installation. Neither of these lines, the 161-kilovolt nor the 115-kilovolt will provide the degree of service that is required to assure that that missile will go when the button is pushed. The Corps has stated that they need at their missile a high degree of reliability.

You gentlemen were talking a minute ago about 99.5 percent reliability. They wrote it down with a period and 20 nines behind it. When Senator Hansen talked about raising this one more degree, if you raise it to this degree, no surface transmission can provide that reliability and on that basis the Corps of Engineers, who is building for the Air Force, plans the installation of diesel systems in the area to be sure that when we need that missile system, it goes.

Surface transmission—ours will run 99.8 or better. They have said that they need better than that even for——

Senator METCALF. Which one will run 99.8, the 115-kilovolt?

Mr. KEATING. Generally, the overall system. The Corps ran a review on our 230-kilovolt system in the Dakotas area and developed these facts on their own before they were willing to talk about what their reliability was.

Senator METCALF. I am certainly in accord with Senator Hansen about this business of reliability. I believe it was Senator Goldwater on the floor when we were talking about the travail we have all gone through recently on Apollo 13, he said if we had 99.9 percent accuracy in all the various materials that went into one of these Apollo 13's, there would be 5,600 parts that still could fail.

Nevertheless, we spend a good deal of money, and properly so in my opinion, to make that system doubly reliable, and we are going to spend more money the next time we send one of these missiles into the air.

When we are defending not three lives, but thousands of lives, with such things as a Safeguard, ABM system, and ballistic missiles, we should have the same concern for reliability. I think you should have the same concern to be sure——

Senator HANSEN. Would the Senator yield?

Senator METCALF. Surely. I am delighted to yield.

Senator HANSEN. I just would like to observe, Mr. Chairman, that a couple of years ago, as I recall, I was on a panel at which time there was great concern being evidenced over the question of reliability, and I just asked that some notes that were prepared by me be made available so that I could make an observation on this point.

The Arkansas Power and Light Co. in a presentation to its Congressional delegation announced that presently it has a 99.98-percent reliability. This is on a capital investment of $500 million. Although a 100-percent reliability would not be possible because of the human

factors, the Arkansas Power and Light, hypothetically, to reach 100-percent reliability would double capital investment.

This would also approximately double electric rates to the consumers of the company.

I just make this observation to portray perhaps somewhat more graphically what we are talking about when we are trying to squeeze out, as I attempted to do when our distinguished colleague from the Eastern District of Montana—Mr. MELCHER—was here testifying.

Senator METCALF. This is in his district.

Senator HANSEN. The point I wanted to make is simply this; that we get down to a question that I think has to be answered by the public: How much are they willing to pay for making a system as nearly reliable as it can be humanly made, and I think it underscores the good judgment that has been demonstrated by the Department of Defense in providing backup systems on the spot because, as I think Mr. Keating observed, you just can't devise a surface system that would deliver the degree of reliability with which I certainly do agree with my distinguished colleague from Montana is essential for a system so vitally important to our national security as is the ABM.

Thank you very much, my colleague, for yielding.

Senator METCALF. I completely concur.

I just wanted to point out that at an Air Force Base the fluctuation of your East-West tie is such as to endanger very delicate instrumentation. Now in this area we are going to put in instrumentation that is many, many times more delicate, more complex and much more vital to the defense of the Nation than that instrumentation we have at Opheim Air Force Base.

Fluctuation alone might mean a malfunction, even though we had a standby power system because of the injury that fluctuations and voltage cost to the instruments that would be a part of that ABM system.

Now, have you consulted the Defense Department about this?

Mr. KEATING. No, sir.

Mr. ARMSTRONG. Senator, could I state this, that we are as concerned as you are on the reliability. I think there are a lot of things that are getting into this picture that go beyond what the immediate problem was, and that is: Is it prudent to expend $4 million, that will cost the Government $293,000 a year, to provide this service until these loads do get tied down and do get developed and do get specified, or should we utilize the existing facilities that are built, at a cost of $74,000 until such time that this gets into the picture, the additional lines, and will be required for reliability.

It is not one against two or three lines, but it is one against the other in this instance. It seems to us that it is more prudent to utilize what is there for this time until these loads get developed and tied down and not make the $4 million-expenditure in view of our tight budget situation, and then at such future time as these other problems do get resolved and do get defined, we are in a better position to better handle them.

Senator METCALF. Have you consulted the Justice Department on this?

Mr. ARMSTRONG. No, sir.

Senator METCALF. Are you familiar with the antitrust implications that would be involved in the signing of this contract?

Mr. ARMSTRONG. No, I am not. No.

Senator METCALF. Do you know that the Justice Department just a few weeks ago filed a suit against the Northern Natural Gas Co. in Minnesota charging them with entering into unlawful contracts giving——

Mr. ARMSTRONG. Where does that enter into here, Senator?

Senator METCALF. Senator Mansfield gave you the clue.

Mr. ARMSTRONG. I am a little lost.

Senator METCALF. The Montana Power Co. is driving into co-op territory and giving them an opportunity to invade co-op territory in a State where we don't have any territorial integrity program and giving them an antitrust advantage that I believe would be analogous to the Northern States Natural Gas Co. case.

Mr. ARMSTRONG. Senator, I don't see it that way.

Senator METCALF. Well, have you asked the Justice Department about it?

Mr. ARMSTRONG. No, sir.

Senator METCALF. Have you asked your solicitors about it?

Mr. ARMSTRONG. They have reviewed it, surely.

Senator METCALF. Your solicitors have reviewed it?

Mr. ARMSTRONG. Aren't we going beyond what our particular problem is here, and that is, shall we utilize an existing facility, that is there, under a cancelable contract in the interim, while these loads develop, and while the refinements of what is needed in the future develop, and we get to the point that we can better meet them, rather than building excess capacity that we are not going to be needing for many years.

Senator METCALF. Have you asked the REA Administrator as to his opinion?

Mr. ARMSTRONG. No, sir.

Senator METCALF. Did you know that the REA Administrator Mr. Hamil, was in Billings recently this year and he stressed the importance of territorial integrity and he pointed out that an IOU line deep into co-op territory would prevent expansion of co-op service? Did you know that?

Mr. ARMSTRONG. No, I did not. But we have been——

Senator METCALF. So you have not gone in as a prudent man to find out whether or not additional investment would be made? You have not gone to talk with the REA, you have not gone into your own department to talk with the Bonneville Power Administration, you have not talked to the Justice Department, you have not talked to the Defense Department, all of whom are going to be concerned, all of whom are going to be involved by the decision that you make.

Now, as a prudent man, don't you think that you should have consulted with them before you reached your ultimate decision?

Mr. ARMSTRONG. Senator, we had a problem of taking care of the immediate problem. These are other problems that are further ahead of us.

Senator METCALF. They are part of this problem, Mr. Armstrong. They are certainly part of this problem.

Mr. Hamil said in Billings the other day, that one of the most important problems of financing of REA for expansion of service was territorial integrity, and yet you are permitting the driving of a line and helping finance right into REA territory.

Mr. ARMSTRONG. Senator, the line is there, it is built.

Senator METCALF. But you are going to pay the Montana Power Co. $74,000 a year.

Mr. ARMSTRONG. $72,000.

Senator METCALF. Well, let's get this straight. You said $74,000 before.

Mr. ARMSTRONG. Excuse me. I stand corrected.

Senator METCALF. Okay. $74,000 a year for wheeling Federal power to co-ops in that area, isn't that right?

Mr. ARMSTRONG. That is correct; yes, sir; as compared to $293,000.

Senator METCALF. My whole point, Mr. Chairman, here is that the Bureau of Reclamation has not yet met the criteria that was established by the Appropriation Committee and has not carefully explored all of the alternatives that are necessary for the development of proper answers to the questions which were presented.

Senator ANDERSON. Mr. Armstrong, you know what the rule is under the Reorganization Act, section 133 (e):

> Each standing committee shall, as far as practicable, require all witnesses appearing before it to file in advance written statements of their proposed testimony and to limit their oral presentations to brief summaries of their argument.

Mr. ARMSTRONG. I am sorry, Senator.

Senator ANDERSON. Your staff knew all about it.

Mr. ARMSTRONG. I can assure you that it won't happen again. We will fully comply.

Senator ANDERSON. What was the reason for the question?

Senator METCALF. Mr. Chairman, the reason I raised the question was because this morning Mr. Armstrong interjected something new into the hearing, a modified contract, and it is very hard to just sit here on the basis of notes that he supplied and interrogate a witness about a contract, especially as long and involved and complex as this, that has been modified.

I am perfectly willing to try to cooperate as much as I can, but it would seem that he would have at least provided us with a memorandum as to the modified contract.

Senator ANDERSON. Yes.

Senator Jordan.

Senator JORDAN. Thank you, Mr. Chairman.

I am a little confused by all of this because I don't have the advantage of familiarity with the area.

So I may clear up some points in my own mind, Mr. Armstrong, let me go back with you and review the terms of reference which you regard as in your directive to work on this matter.

As you read from the report of the House Appropriations Committee:

"The Montana Power Co. has initiated and is nearing completion of a 115-kilovolt line from Great Falls to near Cut Bank, Mont., in the vicinity of Browning. As it appears that the company facilities could provide substantially the same benefits as a Federal line until 1980 when the cooperatives are to be served at Browning by the Booneville Power Administration, the committee questions the expediency of the investment in the interim in a Federal line in lieu of payment of an annual wheeling charge estimated at about $66,000. Before construction of the Federal line is undertaken, therefore, the committee requests that negotiations be resumed in an effort to reach a satisfactory wheeling arrangement with the company. The com-

mittee believes the agreement should (1) assure reliable service and guarantee adequate capacity of the company's line to provide for the load growth of the cooperatives until 1980."

Now, it seems to me this is your directive, this is the order under which you were proceeding, was it not?

Mr. ARMSTRONG. Yes, sir.

Senator JORDAN. All right. In your opinion, does this contract which you have now negotiated with Montana Power Co. assure reliable service and the guarantee of adequate capacity of the company's line until 1980?

Mr. ARMSTRONG. Yes, sir, and the co-ops agree.

Senator JORDAN. That was the next point, the next question I was going to ask.

You testified, I believe, that the co-ops found certain provisions in the original contract with which they did not agree, they were taken into conference and the differences were worked out and the final contract which has not been made available to this committee does have the approval of the representatives of the co-ops, of the Bureau of Reclamation, and of Montana Power.

Is that a fair statement?

Mr. ARMSTRONG. Yes, sir, I think it is. The final contract language has not been all put together yet, but it is in the process of being formulated now to meet these objections.

Senator JORDAN. To meet the directions that you had from the committees of the Congress as to reliability and selective capability?

Mr. ARMSTRONG. Yes, sir, they do that, Senator.

Further, they meet, as we understood it, the agreements with the cooperatives. They were agreeable to these changes.

Senator JORDAN. Even though they do not meet the point that Senator Mansfield brought up about the additional reliability of loop service as compared to a direct line?

Mr. ARMSTRONG. Well, essentially, sir, except for the 33 miles on the western terminus, and these are Glacier cooperative lines, won't be within the loop, but essentially it does. These 33 miles are another problem and relates to these other problems that we have been talking about as to how, when and where it ties in with other powerloads, other power sources, and so on, which at this point is conjecture.

We feel that this is the prudent thing to do, to utilize again what is there now while these other things are developing. We are not precluded at some future time if the needs are there and they can be justified, to provide them lines that we can or the co-ops can provide them.

Senator JORDAN. Your direct charge was to meet the requirements of this cooperative's needs until 1980.

Mr. ARMSTRONG. Yes, sir.

Senator JORDAN. No longer than that, until 1980.

Mr. ARMSTRONG. Yes, sir.

Senator JORDAN. That was your specific charge under the directions of the committee.

Mr. ARMSTRONG. Yes, sir, and that is what we have done.

Senator JORDAN. The second criteria was to make provision for adequate prior notice to the company for installation of any additional facilities that might be needed to serve load growths.

I read some place that the customers' 1980 loads are estimated to be 69 megawatts, and the Bureau and company existing lines will be able to deliver 85 megawatts.

Mr. ARMSTRONG. Yes, sir.

Senator JORDAN. Now, did the cooperative representatives agree that this was ample reserve for the load growth between now and 1980?

Mr. ARMSTRONG. Yes, sir; these were worked out in cooperation with their estimates of what the load growth would be and that is included within the 69-megawatt figure.

Senator JORDAN. And it is your opinion then that your present state of negotiations have met criteria No. 2?

Mr. ARMSTRONG. Yes, sir.

Senator JORDAN. Criteria No. 3 said that it should be cancelable upon reasonable notice if the company declines increased wheeling capacity limits. Has that been made a condition of the contract?

Mr. ARMSTRONG. That has been made a condition of the contract.

Senator JORDAN. Then you are testifying here today that you were limited in the charge that was put to you by the criteria set up by the Congress?

Mr. ARMSTRONG. Surely.

Senator JORDAN. You have no authority, no insistence of the Congress that you check with the Justice Department, that you check with the Defense Department, that you check with anyone—these were the specific creteria that were set up for you to adhere to?

Mr. ARMSTRONG. To meet this specific problem on a temporary basis.

Senator JORDAN. On a temporary basis until 1980.

Now, I think you have testified that a Federal construction would have cost in one place $3,355,000, and in your oral testimony I think you said probably $4 million.

Mr. ARMSTRONG. $4 million, Senator, based on present costs.

Senator JORDAN. $4 million based upon present costs. And the wheeling charge which you are negotiating now with Montana Power Co. would call for an annual cost of $72,000——

Mr. ARMSTRONG. $74,000.

Senator JORDAN (continuing). $74 000 which is less than 2 percent of the cost of the $4 million Federal construction?

Mr. ARMSTRONG. That is correct.

Senator JORDAN. And you also testified that the annual cost for the 161-kilovolt line if it were built by the Bureau, would be $293,000.

Mr. ARMSTRONG. Yes, sir.

Senator JORDAN. What you are doing here, as I understand it, coming from a full start without any prior background is you were given a directive to meet a temporary need to supply energy to a co-op between now and 1980, the 10-year period between 1970 and 1980?

Mr. ARMSTRONG. Yes, sir.

Senator JORDAN. And three specific criteria were set up for you to be your guideline?

Mr. ARMSTRONG. Yes, sir.

Senator JORDAN. In your judgment you have met those criteria and you now recommend that the Government, instead of going forward now to build a $4 million transmission line which would cost $293,000 annually, that you complete the negotiations in full con-

ference with the representatives of the co-ops to meet this temporary need between now and 1980 at an annual cost of $74,000.

Mr. ARMSTRONG. Yes, sir; I certainly don't believe I would be in a very good position to go to the Appropriations Committee and tell them that I need $4 million to build this line that I can get by with in this interim until some of these other problems are developed, other problems are defined, when I can get by with this $74,000 a year.

Senator JORDAN. Thank you.

Senator ANDERSON. Senator Hansen.

Senator HANSEN. Thank you, Mr. Chairman.

About a year ago, I think more than a year ago as a matter of fact, there was introduced by Senator Kennedy on behalf of himself, Senator Hart and Senator Tydings, S. 1071, the bill commonly referred to as the Electric Power Reliability Act of 1969.

In the hearings and testimony that was presented in support of that bill the preponderance of testimony seemed to indicate to me at least that the best guarantee against the wide area power failure was firm and adequate local basis generation. Do you agree with that statement?

Mr. ARMSTRONG. In general, yes.

Senator HANSEN. Of course, there was much testimony but the thrust, as I tried to sum up what had been said, was this feeling also, that if we had the power to compel common ownership of facilities that the possibility of sabotage would thereby be increased.

Would you care to comment on that observation? Do you agree or disagree?

Mr. ARMSTRONG. This is one of the problems.

Senator HANSEN. The purpose, Mr. Chairman, in my posing these two questions is that there is understandably, and certainly for good reason, wide concern about what we can do to minimize power failure.

I think if we were to assume that we had more than adequate generating facilities throughout the country, but if we had them in a few places, instead of in many areas, that as I view it at least the possibility of sabotage, of power failure, would be increased even though you might have a few sources of power which collectively could generate more power than a whole lot of little systems would be capable of generating, the possibilities of power failure would be enhanced the longer distances you have to wheel power and the fewer become those generating sources.

Do you share that feeling?

Mr. ARMSTRONG. I think that is correct.

Senator HANSEN. Now, as I understand further there has been talk this morning about the magnetohydrodynamics concept that I find most exciting, primarily because I share the concern of many with regard to air pollution and to the great amounts of water that must be consumed in some of the present ways we have of generating power.

If this can be brought out, if this new concept can be made a reality—and I must say that I am not as confident that it will be brought into full fruition as some are, I hope it can be. I think it would be great. Probably the States of Montana and Wyoming could make a very significant contribution to supplying the power needs of the entire country if this concept can be brought about.

I support and share the enthusiastic impetus that has been given by my colleague, Senator Metcalf, and Senator Mansfield. Every time this subject is brought up, I am all for it. I don't know how quickly it can be brought about.

In the meantime, do I understand correctly that what you have tried to do is to meet the problem of power deliveries as you can project them within this coming decade and you are not trying to go beyond the year 1980, but simply to try to meet a very pragmatic problem that has to be faced up to between the years 1970 and 1980? Is that what you have been trying to do?

Mr. ARMSTRONG. Yes, sir; and to make expenditures now on the basis of what some future load might be beyond that time does not appear to us to be a prudent solution when we have a line there now that we can utilize at this relatively small cost.

Senator HANSEN. Well, it would be my further opinion that if some of these new concepts can be developed into fruition more quickly than I am fearful they may be, that perhaps important sources of power generation could develop at locations which we may presently not now contemplate. Would that be your feeling?

Mr. ARMSTRONG. That is true. There are changes that are occurring in this field. The magnitude of change is tremendous, and to accurately predict what is going to be the case 10 years from now, 15 years from now, 20 years from now is most difficult because of these developments that you mention.

Senator HANSEN. Would it be a fair statement to observe that the present sources of supply upon which we are dependent now could indeed not be relatively as important after 1980 in the overall power supply contribution that our various sources of energy may be making by 10 or more years from now?

Mr. ARMSTRONG. That is very true, and our power available for increased loads that we have to provide for won't go beyond 1980 at the most, and most of our contracts provide for serving load levels at a lesser level than that.

Senator HANSEN. Just one additional question, Mr. Chairman.

Again then, with reference to the desirability of trying to bring into the system additional sources of power production as a contribution toward reliability, instead of more looping from presently constructed plants, would it be indicated in your judgment that we proceed with some deliberateness so as not to preempt the changed pattern of power supply that could evolve in the next 10 or 15 years?

Mr. ARMSTRONG. Yes.

Senator HANSEN. I have no further questions, Mr. Chairman.

Senator ANDERSON. Thank you.

Senator METCALF. May I ask a couple more questions, Mr. Chairman? Will you indulge me? The committee has been very patient.

I understand the load growth of the area involved in this contract exceeds the average growth in the Nation. At the estimated growth, rate of growth and assuming that the Bureau's 161-kilovolt line was not built, until what year will the system be able to serve the Shelby-Cut Bank-Browning area?

Mr. ARMSTRONG. I don't have that, Senator, but I will be glad to supply it for the record.

Senator METCALF. I will supply these questions to you, and if you don't have the answers please supply it for the record.

Mr. ARMSTRONG. All right.

(The information referred to follows:)

1. I understand the load growth of the area involved in this contract exceeds the average growth in the Nation. At the estimated rate of growth and assuming that the Bureau's 161-kv line is not built, until what year will the system be able to serve the Shelby-Cut Bank-Browning area?

Assuming that the Bureau's 161-kv line is not built; the Havre-Shelby-Cut Bank-Browning line and the proposed wheeling arrangement from Great Falls to Cut Bank will enable delivery of approximately 85 MW and customer load in 1980 is estimated to be 69 MW. Voltage control facilities would be expected to be required during this period.

2. Until what year will the system be able to sustain a critical line outage without service interruption?

A critical line outage involving a section of the existing Bureau 115-kv line indicates that were the transmission agreement in effect, the Cooperatives' load in the area could be carried through the winter of 1976-77. Under the present situation, without the transmission agreement, if a section of the existing Bureau line were to go out, the whole area would be without power west of the outage.

3. How soon then would it be necessary to negotiate with the Company for an additional 115-kv line?

Depending upon the reliability desired and economically justified under the outage circumstances discussed in #2, an additional line will be needed no later than the winter of 1976-77. Prior to this time we, the Cooperatives, and the Company would need to explore the economics of building such a facility. As stated elsewhere, the Co-ops have informally advised that loads in the Browning area would not justify a second Cooperative Cut Bank-Browning line until 1978. If it were determined that for purposes of reliability and not load an additional line were needed prior to 1978 from Great Falls to Browning and if the Company failed to agree or required an uneconomical price we could, if funds were appropriated, proceed to build an additional line and cancel the contract.

4. Without the Bureau's 161-kv line, Browning will not enjoy the reliability of loop service but will be served by a 33-mile radial line. How soon do you expect that construction of a second line from Cut Bank to Browning will be necessary?

Such construction would be the responsibility of the Co-ops, and we have been informally advised by them that the loads in the Browning area would not justify a second Cut Bank-Browning line until 1978. From a reliability standpoint any radial line requires some other power source to be reliable; therefore a second line could be necessary at any time.

5. Since part of the cost of the Bureau line can be attributable to providing this additional service to Browning, have you included the cost of the second Cut Bank-Browning line in your analysis of the Company plan?

In the course of our studies we considered the cost of such a second Cut Bank-Browning Cooperative 115-kv line in our analysis of the Company plan. The cost of such line, constructed with REA funds, has been estimated at $84,000 annually.

Senator METCALF. Let me ask the next question, and you may wish to amplify your answer to both of these questions in completion of the record.

Part of the cost of the bureau line can be attributable to providing this additional service to Browning, the 161 kilovolt line will provide the loop service rather than the radial service to Browning?

Mr. ARMSTRONG. Yes, sir.

Senator METCALF. Have you included the cost of your second Cut Bank-Browning line in your analysis of the company plan?

Mr. ARMSTRONG. Not in this analysis that we have presented to you; no, sir.

Senator METCALF. You have not?

Mr. ARMSTRONG. No, sir.

Senator METCALF. What is the nature of the powerloads in the Shelby-Browning area? What is the impact of a major outage in this kind of a market?

Mr. ARMSTRONG. We can supply that for the record.

(The information referred to follows:)

6. What are the nature of the power loads in the Shelby-Browning service area? What is the economic impact of a major outage in this kind of market?

The power loads in the Shelby-Browning service area consist primarily of rural, small municipal, Glacier Park, and oil field loads. The economic impact of a major outage would affect the local market and the tourist trade of Glacier Park; the monetary effect would be difficult to determine.

Senator METCALF. Then would you supply the impact on the defense installations, both ABM and ICBM, of a major outage in this area?

Mr. ARMSTRONG. Yes.

Senator METCALF. As far as you can without getting into restricted matter?

Mr. ARMSTRONG. As far as we can on the basis of the very limited information that we have.

(The information referred to above follows:)

As Mr. Keating previously stated, the Corps of Engineers and the Air Force plan to install diesel systems as their primary source for the sensitive features at all ABM and ICBM facilities. We understand that each diesel installation will be made up of a number of individual units, each capable of performing the firing function; therefore, a major outage in this area apparently would only affect the housing or service facilities at these sites.

Senator METCALF. Mr. Chairman, a question came up here as to the jurisdiction of Bonneville. I am having our counsel check up on my memory.

Mr. Keating testified in the Appropriations Committee, and Senator Young asked the question:

Hasn't the Department promised that some of these co-op customers could have Bonneville service by 1977 or within the period of the draft contract?

And you said—In our previous discussions with the company we asked for funds to build a line system back, and we were at that time directed to negotiate with the company. We did at that time negotiate an arrangement which was rather a complicated one which envisioned the possibility of service from the Bonneville area.

I believe at the hearings last year either on the House or Senate side, and I do not remember which, it was mentioned that we negotiated this type of an arrangement which was contemplated. Now this negotiation just disappeared; it was not satisfactory either to the cooperatives, they thought they would rather have the construction, and we never did consummate that contract and it is no longer valid.

Now, how do you justify that statement with the statement that you made to this committee that you don't believe that there is a preference to Montana for Hungry Horse power?

Mr. KEATING. I don't think the two are in conflict, sir. At the time we were negotiating this previous contract as a part of the total package, we agreed to let Glacier become a customer of Bonneville.

Granted, sir, that in my opinion the Secretary of Interior may declare Bonneville Power Administration's market area to include a larger area than now—even to include New York City. Within his prerogative of establishing a marketing area, he has not established that marketing area east of the Continental Divide.

Senator METCALF. Mr. Keating, I suggest that you stop testifying as to your opinion without investigating the law because your opinion is exactly contrary to the law, and I don't want to get you into any more trouble than you are getting into right now as to the authority

of the Secretary of the Interior to expand the Bonneville territory which has been defined by the Congress as well as the other territories.

Mr. ARMSTRONG. Thank you, Senator.

Senator METCALF. I suggest that you get a copy of Public Law 88–552 and read the last sentence of that:

> Nothing in this act shall be construed to modify the geographical preference of power users in the State of Montana which is established by the Hungry Horse Dam Act, as amended.

Mr. KEATING. I have read it, sir.

Senator METCALF. I really am not trying to trap you, and I think that expressing an opinion about something you obviously know absolutely nothing about is just going to get you into trouble.

Mr. ARMSTRONG. Senator, is this question germane to this particular problem?

Senator METCALF. The question is germane in that I asked you if you had consulted with Bonneville Power Administration as to the need and the feasibility of bringing this line into operation a little earlier to serve the consumers before 1980, and you testified to it as to 1977 before the Appropriations Committee and then Mr. Keating said that negotiations had collapsed.

My point when I was trying to find out about whether or not you consulted with Bonneville and you finally admitted that you had not, Mr. Keating said in defiance of a preference clause that both Senator Mansfield and I have insisted that we have had, it has been written into the law, that he not only knew of no Bonneville Power Administration preference in eastern Montana but he didn't believe that there was one.

I am just not going to let the hearing proceed or that statement go unchallenged in the record because every time that statement has come up in the Interior Committee, and I have been on the Interior Committee of either the House or the Senate for a long time, I have challenged it. And it came up in the course of the Northwest Preference Act, Mr. Chairman.

I was the one that offered the amendment in committee that said that nothing in that act shall limit the power of the Hungry Horse Dam Act and as to Montana's preference in Bonneville Power.

Mr. KEATING. Senator, may I make one more comment? I may even be getting in deeper, but I would like to make it anyway. I am not denying the preference to the State of Montana to the Hungry Horse power.

Senator METCALF. For all of the State of Montana?

Mr. KEATING. Right; not a bit. I was only challenging how that may be marketed, whether through Bonneville Power Administration or through the Bureau of Reclamation, either one. I agree with you wholeheartedly that there is a reservation of power for Montana from Hungry Horse power plant.

Senator METCALF. That is helpful. I really didn't want to trap you; I just wanted to know. The initial question was: In view of the fact that this is going to be served by the co-ops in the future, had you consulted with Bonneville Power Administration before you made your decision?

You finally came around that you had not.

Thank you, Mr. Chairman.

Mr. ARMSTRONG. Thank you, Mr. Chairman.

Senator ANDERSON. Mr. William E. Trommershausen.

STATEMENT OF WILLIAM E. TROMMERSHAUSEN, PARTNER AND CHIEF CONSULTING ENGINEER, R. W. BECK AND ASSOCIATES, DENVER, COLO.

Mr. TROMMERSHAUSEN. It is an honor to appear before your committee hopefully to solve some of the problems that are associated with Federal power supply.

I appear here today on behalf of Central Montana G. & T. Cooperative and its member Glacier Electric Cooperative and the Midwest Electric Consumers Association of Denver, Colo. The firm of R. W. Beck and Associates has served both Central Montana G. & T. and Midwest since these organizations were formed. I personally have worked on the power supply problems of Central Montana G. & T. since 1965 and actively participated in the 1968 joint power studies.

I think it would be helpful if I would give you some background information on the nature of joint planning in Central Montana because the Bureau has been faced with a most difficult situation in attempting to develop an adequate power supply for its perference customers.

In 1965 we provided the company with 10-year load forecasts of the membership cooperatives of Central Montana G. & T. and requested that joint plans be made to evaluate the facilities that would be needed to serve the 10-year load growth requirements of the cooperatives. The company preferred to use its present methods of serving the cooperatives and declined to meet with us. The reference to that action is the first item on the background paper.

In August 1968, after a deadlock developed between the cooperatives, the Bureau and the company on the Great Falls-Browning 161 kilovolt line proposed by the Bureau versus the company's Great Falls-Cut Bank 115 kilovolt line, we urged that a computer analysis be made of both plans plus other alternatives. With much reluctance the company agreed to proceed with joint transmission studies using its computer at Butte, Mont. The company insisted, however, that all studies be based on the assumption that its Great Falls-Cut Bank 115 kilovolt line then under construction would be built. This assumption, of course, narrowed the consideration of desirable alternatives but it did provide basic information and data upon which to make a general evaluation of the transmission requirements for the area for the period 1970 to 1980.

Now let us discuss some of the results of that joint study. There was general agreement among the engineering participants in the study that the company's Great Falls-Cut Bank 115-kilovolt line would not provide reliability and capacity for load growth beyond 1972 or 1973. You will see that I am in disagreement in that statement with the bureau of engineers and I will enlarge upon that further for the benefit of the committee.

An effort was made to have the company convert its 115-kilovolt Cut Bank line to 161 kilovolts but this the company declined to do. A substitute proposal was offered which involved the construction by the Bureau of a Great Falls or Fort Benton to Shelby 161-kilovolt line at the earliest possible date. The date suggested was 1972 or 1973. The company agreed in writing to support such a facility but Glacier preferred the original plan of the bureau to construct the Great Falls-Browning 161-kilovolt line.

Senator METCALF. Mr. Trommershausen, have you identified Glacier?

Mr. TROMMERSHAUSEN. Glacier Electric Cooperative, yes.

The Bureau line, if constructed, to Shelby at the 161-kilovolt level would require that Glacier build a second parallel line from Shelby to Browning via Cut Bank to provide reliable loop service to its rapidly growing Browning load. This plan would add greatly to the transmission burden that Glacier is now carrying. That is the reason, as I understand it, why we could not advance that program in 1968.

Glacier, Central Montana G. & T. and Midwest then requested that Congress again consider the construction by the Bureau of the Great Falls-Browning 161-kilovolt line. Criteria No. 1 required that the company's 115-kilovolt line "would assure reliable service and guarantee adequate capacity to provide for the load growth of the cooperatives until 1980." In my opinion the company could not come near meeting this requirement which in our opinion was developed by the Appropriation Committees without a complete understanding of the results of the 1968 joint engineering study. Apparently neither the company nor the Bureau made an effort to provide the committees with the information that it needed to evaluate the reliability of the company's 115-kilovolt line.

Now in that regard let us turn to the second page of the background paper and you will see a summary. I put this information in the record to show you that not even the principal officers of the company were in full agreement as to what kind of reliability could be expected for this company's 115 kilovolt line. In May 1968 it was stated that this line would serve for a substantial period in the future. In August of that year a different officer of the company indicated that the line could carry the loads through 1975. On May 2, 1969, the president of the company said for several years.

Now here we have some experts discussing the capacity and reliability of an important transmission line and I submit that this is a rather substantial degree of difference. May I also point out that the 1968 study, the joint study, did not include the Safeguard missile loads that have been discussed here this morning.

The Bureau and the company then proceeded to develop a complex wheeling arrangement that involved future construction of transmission lines by the company with all future costs and terms and conditions to be negotiated. The contract—and I am speaking of the March 4 contract, I believe—was unacceptable to the cooperatives and members of Midwest who were deeply concerned about the new precedents that were being established in providing that the local private utility would have a virtual monopoly on future transmission construction in the area.

Now I have handed to you a letter report which I call the R. W. Beck Study of January 30 for the Missouri Basin Systems Group.

Central Montana G. & T. is a member of the Missouri Basin Systems Group, the power pool consisting of preference customers and the Bureau in the Missouri Basin. The Missouri Basin Systems Group requested that we summarize the added loads that would accompany the Safeguard defense program now underway in Central Montana.

Now I will attempt to show you several critical figures that hopefully will explain to you how the joint committee that made this study attempted to evaluate reliability and capacity.

Now first of all attached to the letter you will see a chart showing 1970——

Senator ANDERSON. Which page are you on now?

Mr. TROMMERSHAUSEN. Sir, the first map attached to the letter. You will see the distribution of the loads along the so-called high line which is the one that runs from Havre, goes to Rudyard, Tiber, Shelby, Cut Bank and Browning. That is the so-called combination of the Bureau's Havre-Shelby line and Glacier's Cut Bank-Browning line.

Those loads total about 30,000 kilowatts. I may say that because of the important defense loads now served on that radial line, an important oil refinery, that this area has not had the same degree of reliable service as is found elsewhere on the Bureau system. The loads on that line have grown to the extent that steps should have been taken 5 years ago, in my judgment, to have put this important area on the new loop circuit but that, however, was not accomplished and we now must face the task of solving this problem.

Senator METCALF. Mr. Chairman, may I interrupt.

The chart to which you refer is dated January 1970. Does it include the Safeguard defense loads?

Mr. TROMMERSHAUSEN. No, sir; this 1970 was the date that we——

Senator METCALF. Based on the 1968 study.

Mr. TROMMERSHAUSEN. Yes, sir; but on the top of the sheet it is headed "1970 Peak Load Estimates." That was just drafted in this form for this committee hearing, drafted in January 1970 for our report.

Senator METCALF. It does not include the Safeguard defense load?

Mr. TROMMERSHAUSEN. No, sir; these are the same loads we used back in 1968.

All right. Now the next table is headed "1978 Peak Load Estimates" and you will see there some asterisks on loads at Havre, Shelby, and Conrad. Now this represents about 15,000 kilowatts or 15 megawatts of surface power that the Defense Department said they would seek bids for, and for this amount of surface power—I say surface power because it is in addition to what they are going to use with their underground generation—they wanted to obtain this from a commercial utility with voltages under normal conditions of plus or minus 5 percent. That was all the variation that they would tolerate.

So we viewed this problem from our analysis in recent months based on that requirement for surface power. Now the Bureau of Reclamation testified this morning that the 1980 loads of the cooperatives alone would be 69 megawatts. Now I think perhaps they are using a different chart than we did but our reports show that the 1978 loads total 69 megawatts, plus the 15 megawatts of safeguard loads by 1978, so this figure will be substantially higher than that by about 8 or 10 percent per year for 2 additional years if we are looking at a 1980 figure.

Do I make myself clear on that?

Now it is most difficult for an engineer to take the tools and the results of our wonderful computers on a complex transmission network and make laymen understand it. I have never been completely successful in this endeavor, having tried it a couple times in a court of law, but I think I can give you some idea of the concept as used in trying to evaluate this most difficult reliability problem.

First of all the engineers agreed—the company engineers, the co-operatives engineers and the Bureau engineers—that we would make this study based on not the peak loads but 80 percent of the peak loads which won't measure the condition perhaps if you have a line failure at the time of your annual peak. We also agree as a perimeter that to be acceptable the voltage should not be less than 90 percent of normal. These were some guidelines that were set up as we attempted to evaluate some 20 or 30 different computer schemes..

Essentially this chart shows you the top figures over on the left hand corner and you will see the word "voltages." Starting at the left hand corner and reading to the right you see at Browning a voltage of 0.837. That means that under this condition——

Senator METCALF. What chart are you referring to now?

Mr. TROMMERSHAUSEN. SK3, computer chart SK3.

Senator METCALF. Plan A.

Mr. TROMMERSHAUSEN. Plan A, SK3, that is correct.

Senator METCALF. Thank you.

Mr. TROMMERSHAUSEN. I will repeat. You will see a voltage at Browning of 0.837. That means that under this condition of operation the voltage at Browning would not be 90 percent, it would be 3.7 percent and would be considered very marginal.

Now the condition that created that voltage—if you look down there in the middle of the chart where it says Conrad you will see a note "line open." We had assumed under that condition, which is the worse thing that can happen on this loop, that the company's new line between Great Falls and Conrad would have a service failure and then you can see that not only would the Bureau's original high line have to carry all of the existing co-op loads but it would have to also pick up the company's loads at Conrad because the company is serving some of its own loads in substantial amount from this line.

Now this is the condition in 1970 without missile loads.

Senator HANSEN. Mr. Chairman, could I interrupt at this point?

Senator ANDERSON. The witness is supposed to have a 10 minute report. You are going to be about 2 hours.

Mr. TROMMERSHAUSEN. No.

Senator ANDERSON. Go ahead.

Senator HANSEN. I am trying my best as a layman, and this is difficult for me. What you are talking about now is a projection of what follows assuming that a line goes out, is that right?

Mr. TROMMERSHAUSEN. That is correct.

Senator HANSEN. I see.

Mr. TROMMERSHAUSEN. The computer is trying to tell us what is going to happen if we connect the company's line with the Bureau line and operate as a loop, and then we have a failure of one segment of the company's line which is the worse thing that can happen on this total picture.

Now I believe it was this study that caused our clients, and the Bureau, and the company to agree that we had to have an additional line into this area by 1972 or 1973 if we were going to meet the 90 percent voltage criteria. That is the point I am trying to make with this exhibit.

Now if we turn to the next exhibit——

Senator METCALF. That is SK4?

Mr. TROMMERSHAUSEN. SK4 labeled "Plan A Modified." Now this plan is modified by adding the 161-kilovolt line to Browning, adding it and then taking it out of service because it is the most important line, it is the highest capacity line, and if it fails the other line is all looped. The other two lines are all that you have left on the loop. This shows that in 1978 the voltage is barely 90 percent and this does not include the 15 megawatts of missile load. So by reviewing this study, the engineers felt that a third line would have to be built by 1980 if we are going to meet these reliability criteria.

Now we go back to page 3 of my prepared statement.

Senator METCALF. Mr. Chairman, I don't know whether these should be made a part of the record but it would be appropriate to develop this.

Senator ANDERSON. They will be.

(The charts referred to by Mr. Trommershausen in his testimony is in the appendix.)

Mr. TROMMERSHAUSEN. As a result of these studies I have the following recommendations to make:

First, the Bureau, the company, and Glacier should enter into a simple interconnection contract—and I have so expressed myself to Assistant Secretary Smith—to provide for such mutual benefits as may be provided by the closing of an important transmission loop. Perhaps the Bureau could pay the company $66,000 per year for 2 or 3 years for such limited benefits as may be developed by such an interconnection since the company's 115-kilovolt line does have slightly more capacity than the Bureau's existing 115-kilovolt line from Havre to Shelby.

Now purely on a capacity basis the respective numbers would be 38 megawatts for the Bureau line, and 50 megawatts for the company line. This is capacity. This is not a reliability figure, this is a carrying capacity figure.

Second, the Bureau should proceed immediately to construct the Great Falls-Browning 161-kilovolt line and upon completion thereof discontinue payments to the company for use of capacity in the company's 115-kilovolt line. The Bureau should also assure the interested preference customers that it can provide the necessary power supply and transmission capacity so that the cooperatives could serve the Safeguard defense loads that will be located in their service areas. This is an important consideration.

Finally, the Bureau, the preference customers, and the company, and perhaps Bonneville, should promptly begin comprehensive planning studies that will develop the additional transmission additions that will surely be required by the late 1970's. The Bureau has heretofore taken a major responsibility for power supply in the high line area of central Montana for the last 20 years and cannot now pass this responsibility to the company for providing all future transmission line additions in central Montana, for the Bureau has indicated that it fully expects to have more than a million kilowatts of additional peaking power for sale from the Missouri River projects in the next several decades and a portion of this valuable resource must be delivered to the preference customers in central Montana.

Commissioner Armstrong did not mention this peaking possibility but it has been widely discussed in the Missouri Basin and perhaps his

reservation was based on the fact that the Corps of Engineers have not yet completed the necessary feasibility study.

RELATED POWER SUPPLY PROBLEMS IN THE MISSOURI BASIN

In the testimony of Reclamation Commissioner Ellis Armstrong before the Senate Appropriation Committee a request for transmission funds in the amount of $2,753,000 for the Missouri Basin (page 2420) was made. Based on our knowledge of transmission problems in the Missouri Basin we believe that the Bureau is not carrying its fair share of the transmission burden in the area, just as it is not sharing its appropriate burden in central Montana

I might point out that the Bureau system in the Missouri Basin represents a Federal investment of over $300 million and the loads on that system are growing at a rate of at least 7 percent per year. Yet based upon this year's budget request for the full Missouri Basin, the Bureau is only asking for 1 percent of its capital investment. If I were the operator and owner of a major transmission system making that limited an amount of new capital investment, I would be greatly concerned that down the road I would be faced with severe capacity and reliability problems

It is widely recognized, and Bill Keating testified this morning, that the Bureau's transmission grid between the Rocky Mountain area and the Missouri Basin, and I would add in the other facilities of other utilities in the area, are so limited in capacity that the so-called east-west lines are opening more than 700 times each month at Stegall, Nebr., and at the Yellowtail project due to overloads. This tie opening is affecting the service being rendered by the Bureau to its widespread group of preference customers in eastern Montana, Wyoming, eastern Colorado, western Nebraska, and South Dakota, and Interior and Reclamation have received many protests on the situation.

We are advised, however, that the Bureau looks upon this as simply an operating problem and apparently has not budgeted any funds to construct the facilities that are necessary to correct this situation. This matter merits careful consideration by the Congress of the United States for voltage problems can cause serious losses for the electric consumers in the Bureau's service area.

Attached is a letter—and I don't have copies of that letter available this morning but it is in the Congressional Record and I think we can find the reference for you—in which the problems associated with inadequate voltage levels are discussed. This letter considered problems in New England where there is a general power and transmission capacity shortage due to inadequate long-range planning and continued opposition to the authorized Dickey-Lincoln hydro project which the Department of Interior has sponsored for the past several years but which continues to be opposed by the same private utilities that are now having voltage and power supply problems.

In recent hearings before the Senate Committee on Appropriations, Secretary of the Interior Walter Hickel proposed a "national power grid" in order to avert some of the major "brownouts" and "blackouts" which he and members of the Federal Power Commission predict will prevail in many parts of the United States. Our clients in many parts of the Nation will applaud this bold plan. They will now expect

that the Secretary take positive steps to develop a plan whereby the East-West EHV transmission lines will be of mixed ownership with the Federal Government also making its fair share of future transmission investments.

Incidentally, Secretary Hickel's plan is not new. More than 30 years ago Mr. J. D. Ross, manager of Seattle City Light and the first Administrator of Bonneville, and Mr. R. W. Beck, founder of the firm of R. W. Beck & Associates, published a paper which described two cross-country high-voltage direct-current transmission lines. This map was included in a technical paper that we presented at the Montana Coal Symposium in November 1969 and is offered here for such use as can be made of it by Secretary Hickel.

The Department of Interior already has on hand one of the important "building blocks" for the cross-country "National Power Grid" in its widely known study No. 190. In fact, the power shortage in the eastern part of the United States can partially be solved by the construction of mine-mouth coal-fired thermal plants in Wyoming, Montana, and North Dakota, and the transfer of power both east and west over high-capacity, extra-high-voltage cross-country transmission lines. The first link in this cross-country grid could appropriately be a high-capacity tieline between the Bonneville System in the Pacific Northwest and the Bureau's system in the Missouri Basin.

We urge the Congress to give full support to the studies of a national power grid which Secretary Hickel now wants to pursue. Time is running out as the Nation's utilities, both public and private, attempt to avert blackouts and brownouts and no time should be lost in getting these studies underway. In the interest of conserving valuable Federal lands in the West, which are continually being used in greater amounts for transmission line rights-of-way, it is especially important that the Federal Government take the lead in establishing a positive study program.

Now in summary, several problem areas discussed in this statement indicate to us that the Department of Interior and especially the Bureau of Reclamation are not being aggressive enough in working out solutions to several real problems that now exist. Perhaps budgetary restraints have hindered actions, but in the utility business adequate service must be provided whether the utility be privately, publicly, cooperatively, or federally financed. Finally, and this is most important, no satisfactory solutions to these problems can be found unless and until there can be truly joint studies of all pending and future power supply and transmission problems, with full consideration of the longstanding preference for public utilities and cooperatives.

That completes my statement, Mr. Chairman.

Senator ANDERSON. Senator Metcalf.

Senator METCALF. Mr. Trommershausen, you have answered some of the questions I was going to propound to you in your regular statement. I was going to ask you to comment on the Bureau of Reclamation statement of reliability and you did and underscored your comment.

Now based on your experience which is considerable, would you recommend the acceptance of the wheeling contract with the Montana Power Co. now that your wheeling charges are left off, even to negotiation with no cost formula specified in the contract?

Mr. TROMMERSHAUSEN. No; I would not. May I give this explanation. The $66,000 a year wheeling charge that the company offered on its 115-kilovolt line plus another $8,000 for connecting the facilities at Cut Bank for a total of $74,000 is a figure that appears to me to have been computed based on the assumption of Federal costs, not private utility costs.

I believe that the annual ownership costs to the Montana Power Co. are perhaps twice that of the Bureau of Reclamation, and whereas you may be getting a bargain at $74,000 a year for 25,000 kilowatts of capacity, which I understand is reserved in that line for the Bureau for 2 or 3 years, that we have no knowledge as to what the company will charge if it had to build a second line, whether it be to Cut Bank or whether it be to Browning or whether it be to Shelby. I would have deep concern about the Bureau's ability to develop a wheeling contract with fair annual wheeling charges unless the committees of Congress gave the Bureau some assistance.

Senator METCALF. Then as I understand it may be that instead of $74,000 annual payment per 25,000 kilowatts in the future when there is a need for four times that much or 100,000 kilowatts, it may not be four times as much but six or seven or 10 times as much.

Mr. TROMMERSHAUSEN. I would not know what the upper limit would be, Senator, but that is the problem that concerns me.

Senator METCALF. One more question. Glacier Co-op serves an oil refinery—it is one of its better customers. In your opinion would a modern oil refinery be satisfied with anticipated service reliability if the company's 115-kilovolt line from that facility becomes part of the Bureau loop?

Mr. TROMMERSHAUSEN. No; if the loads in the area grow and you add the missile loads to them, I don't believe our client would be satisfied operating under a condition of 83 percent of normal voltage.

(Mr. Trommershausen's prepared statement follows:)

STATEMENT OF W. E. TROMMERSHAUSEN CHIEF CONSULTING ENGINEER, R. W. BECK AND ASSOCIATES, DENVER, COLORADO, ON BEHALF OF CENTRAL MONTANA G & T COOPERATIVE AND ITS MEMBER, GLACIER ELECTRIC COOPERATIVE, AND MIDWEST ELECTRIC CONSUMERS ASSOC., DENVER, COLORADO

The firm of R. W. Beck and Associates has served as special consultants to Central Montana G & T Cooperative and Midwest since these organizations were formed. I personally have supervised engineering studies for Central Montana G & T since 1965 and participated actively in the 1968 joint transmission studies between the Bureau of Reclamation (called Bureau) and the Montana Power Company (called "Company") and in the review of the several interconnection and wheeling contracts that have been proposed by the Company in 1968, 1969 and 1970. My employment by the Bonneville Power Administration in the period 1940 to 1955 and with R. W. Beck and Associates from 1955 to present date and the work with the Bureau of Reclamation in the Missouri Basin for these last 15 years provides a background of experience in power marketing and system engineering that enables me to evaluate the Central Montana power supply problem that is of vital concern to our clients and hopefully make a contribution to the eventual solution to this grave problem.

Joint Studies with the Company

On behalf of Central Montana G & T in 1965, we provided the Company with long range forecasts for the member cooperatives in Central Montana and requested that joint plans be made to evaluate the facilities that would be required to serve the 10 year load growth requirements of the Cooperatives. The Company preferred to continue with present arrangements and declined to meet with the Cooperatives.

In August 1968, after a deadlock developed between the Cooperatives, the Bureau and the Company on the Great Falls-Browning 161kv line proposed by the Bureau versus the Company's Great Falls-Cut Bank 115kv line, we urged that a computer analysis be made of both plans plus other possible alternates. With much reluctance the Company agreed to proceed with joint transmission studies using its computer at Butte, Montana. The Company insisted, however, that all studies be based on the assumption that its Great Falls-Cut Bank 115kv line, then under construction would be built. This assumption narrowed the consideration of desirable alternatives but it did provide basic information and data upon which to make a general evaluation of the transmission requirements for the area for the period 1970–1980.

Results of Joint Studies of 1968

There was general agreement among the engineering participants in the study that the Company's Great Falls-Cut Bank 115kv line would not provide reliability and capacity for load growth beyond 1972 or 1973. An effort was made to have the Company convert its 115kv Cut Bank line to 161kv but this the Company declined to do. A substitute proposal was offered which involved the construction by the Bureau of a Great Falls or Fort Benton to Shelby 161kv line at the earliest possible date. The Company agreed in writing to support such a facility but Glacier preferred the original plan of the Bureau to construct the Great Falls-Browning 161kv line. The Bureau line at Shelby would require that Glacier build a second parallel line from Shelby to Browning via Cut Bank to provide reliable loop service to its rapidly growing Browning load. This plan would add greatly to the transmission burden that Glacier is now carrying. Glacier, Central Montana G & T and Midwest then requested that Congress again consider the construction by the Bureau of the Great Falls-Browning 161kv line. During the 91st Congress three specific criteria were developed by the Committees on Appropriations which the Bureau must consider in its negotiations with the Company on a satisfactory *wheeling* arrangement in lieu of constructing the Great Falls-Browning 161kv line. Criteria No. 1 required that the Company's 115kv line "would assure reliable service and guarantee adequate capacity to provide for the load growth of the cooperatives until 1980." The Company's 115kv line could not come near meeting this requirement, which in our opinion was developed by the Appropriation Committees without a complete understanding of the results of the 1968 joint engineering study. Apparently neither the Company or the Bureau made an effort to provide the Committees with the information that it needed to evaluate the reliability of the Company's 115kv line.

The Bureau and the Company then proceeded to develop a complex wheeling arrangement that involved future construction of transmission lines by the Company with all future costs and terms and conditions to be negotiated. This contract was unacceptable to the Cooperatives and members of Midwest who were deeply concerned about the new precedents that were being established in providing that the local private utility would have a virtual monopoly on future transmission construction in the area.

The R. W. Beck and Associates Study of January 30, 1970 for the Missouri Basin Systems Group (MBSG).

Central Montana G & T is a member of the Missouri Basin Systems Group, the power pool consisting of preference customers and the Bureau in the Missouri Basin. MBSG requested that we summarize the added loads that would accompany the Safeguard defense program now underway in Central Montana.

This report is enclosed as an Exhibit to this statement and I will attempt to orally discuss the reliability problems that result from an outage on certain key transmission links.

Also enclosed is a statement that takes excerpts from important correspondence during the period 1965–1969 to show that the Company officials have differing views on the capacity and reliability of its Great Falls-Cut Bank 115kv line.

As a result of these studies I have the following recommendations to make:

First, the Bureau, the Company and Glacier should enter into a simple interconnection contract to provide for such mutual benefits as may be provided by the closing of an important transmission loop. Perhaps the Bureau could pay the Company $66,000 per year for two or three years for such limited benefits as may be developed by such an interconnection since the Company's 115kv line does have slightly more capacity than the Bureau's existing 115kv line from Havre to Shelby.

Secondly, the Bureau should proceed immediately to construct the Great Falls-Browning 161kv line, and upon completion thereof discontinue payments to the

Company for use of capacity in the Company's 115kv line. The Bureau should also assure the interested preference customers that it can provide the necessary power supply and transmission capacity so that the Cooperatives could serve the Safeguard defense loads that will be located in their service areas.

Finally, the Bureau, the preference customers and the Company and perhaps Bonneville, should promptly begin comprehensive planning studies that will develop the additional transmission additions that will surely be required by the late 1970's. The Bureau has heretofore taken a major responsibility for power supply in the "High Line" area for the last 20 years and cannot now pass this responsibility to the Company for providing all future transmission line additions in Central Montana, for the Bureau has indicated that it fully expects to have more than a million kilowatts of additional peaking power for sale from the Missouri River Projects in the next several decades and a portion of this valuable resource must be delivered to the preference customers in Central Montana.

Related Power Supply Problems in the Missouri Basin

In the testimony of Reclamation Commissioner Ellis Armstrong before the Senate Appropriation Committee a request for transmission funds in the amount of $2,753,000 for the Missouri Basin (page 2420) was made. Based on our knowledge of transmission problems in the Missouri Basin we believe that the Bureau is not carrying its fair share of the transmission burden in the area, just as it is not sharing its appropriate burden in Central Montana.

It is widely recognized that the Bureau's transmission grid between the Rocky Mountain area and the Missouri Basin and the facilities of other utilities in the area are so limited in capacity that the so-called "East-West" lines are opening more than 700 times each month at Stegall, Nebraska, and at the Yellowtail Project due to overloads. This tie opening is affecting the service being rendered by the Bureau to its widespread group of preference customers in eastern Montana, Wyoming, eastern Colorado, western Nebraska and South Dakota and Interior has received many protests on the situation. We are advised, however, that the Bureau looks upon this as simply an "operating problem" and apparently has not budgeted any funds to construct the facilities that are necessary to correct this situation. This matter merits careful consideration by the Congress of the United States for voltage problems can cause serious losses for the electric consumers in the Bureau's service area.

Attached is a letter in which the problems associated with inadequate voltage levels are discussed. This letter considered problems in New England where there is a general power and transmission capacity shortage due to inadequate long range planning and continued opposition to the authorized Dickey-Lincoln hydro project which the Department of Interior has sponsored for the past several years but which continues to be opposed by the same private utilities that are now having voltage and power supply problems.

In recent hearings before the Senate Committee on Appropriations, Secretary of the Interior Walter Hickel proposed a "National Power Grid" in order to avert some of the major "brown outs" and "blackouts" which he and members of the Federal Power Commission predict will prevail in many parts of the United States. Our clients in many parts of the Nation will applaud this bold plan. They will now expect that the Secretary take positive steps to develop a plan whereby the East-West EHV transmission lines will be of mixed ownership with the Federal government also making its fair share of future transmission investments.

Incidentally, Secretary Hickel's plan is not new. More than 30 years ago Mr. J. D. Ross, Manager of Seattle City Light and the first Administrator of Bonneville and Mr. R. W. Beck, founder of the firm of R. W. Beck and Associates, published a paper which described two cross country high voltage direct current transmission lines. This map was included in a technical paper that we presented at the Montana Coal Symposium in November, 1969 and is offered here for such use as can be made of it by Secretary Hickel.

The Department of Interior already has on hand one of the important "building blocks" for the cross country "National Power Grid" in its widely known study No. 190. In fact, the power shortage in the Eastern part of the United States can partially be solved by the construction of mine-mouth coal fired thermal plants in Wyoming, Montana and North Dakota and the transfer of power both east and west over high capacity, extra high voltage cross country transmission lines. The first link in this cross country grid could appropriately be a high capacity tie line between the Bonneville System in the Pacific Northwest and the Bureau's system in the Missouri Basin. We urge the Congress to give full support to the studies of a "National Power Grid" which Secretary Hickel now wants to pursue.

Time is running out as the Nation's utilities, both public and private attempt to avert "blackouts" and "brown outs" and no time should be lost in getting these studies underway. In the interest of conserving valuable Federal lands in the West, which are continually being used in greater amounts for transmission lines, it is especially important that the Federal government take the lead in establishing a positive study program.

Summary

Several problem areas discussed in this statement indicate to us that the Department of Interior and especially the Bureau of Reclamation are not being aggressive enough in working out solutions to several real problems that now exist. Perhaps budgetary restraints have hindered actions, but in the utility business adequate service must be provided whether the utility be privately, publicly, cooperatively or Federally financed. Finally, no satisfactory solutions to these problems can be found unless and until there can be truly joint studies of all pending and future power supply and transmission problems, with full consideration of the long standing preference for public utilities and cooperatives.

Senator METCALF. Mr. Chairman, I don't have any more questions. I see in the audience Mr. Fred Simonton who is executive director of Mid-West Electric Consumers Association, a generating and transmission company that is directly concerned and involved with REA's in this area. I would like to have a letter to the chairman from Mr. Simonton made a part of the record at this time.

Senator ANDERSON. Without objection.

(The letter referred to follows:)

MID-WEST ELECTRIC CONSUMERS ASSOCIATION, INC.,
Denver Colo., April 17, 1970.

The HONORABLE HENRY M. JACKSON,
Senate Office Building,
Washington, D.C.

DEAR SENATOR JACKSON: The Mid-West Electric Consumers Association with 270 Municipal utilities and REA cooperatives as members appreciates your decision to respond affirmatively to the proposals of Senators Mansfield and Metcalf for committee review of proposed contractual arrangements between the Montana Power Company and the Bureau of Reclamation. The review, before a Department of Interior position is finalized, is consistent with commitments made to you and the Senate Interior and Insular Affairs Committee at the time Secretary Hickle and, later, Assistant Secretary Smith appeared before your Committee prior to Senate confirmation.

The contract you will be reviewing has been executed by the Montana Power Comapny. Assistant Secretary Smith's letter of March 28th to the members of the Montana delegation indicated that the Department of Interior would execute the contract after discussions with the affected cooperatives.

The contract represents a substantial departure from sound and long established federal power policy. The federal power marketing program has been carefully designed by the Congress as an anti-monopoly program. Directly contradicting congressional intent and sound public policy, the draft contract would create a transmission monopoly for Montana Power Company in an area of Montana where the Company has practically no power supply responsibilities.

The Department of Justice has brought an anti-trust action against Northern Natural Gas for developing contractual arrangements in North East Minnesota that strengthens the company's position in future competitive situations on the Mesabi Range. The proposed wheeling contract goes substantially farther in creating a transmission monopoly for the benefit of Montana Power Company

Certainly your Committee will be concerned to find an anti-monopoly program administered to create monopolies. It is particularly ironic that the Department of Interior would be moving so aggressively to assist monopoly when the Department of Justice, in the same administration, is doing such a meritorious job of protecting the public interest by enforcing the anti-trust laws.

The Mid-West Electric Consumers Association became concerned about the power transmission situation in north central Montana in 1967. When it became apparent that the long, radial Havre-Shelby line could not deliver enough power to meet the areas' growing requirements with any reasonable degree of reliability, the affected cooperatives preferred a 161 KV line from Great Falls to Browning

as against a similar line to Shelby because the former would provide a highly desirable "looped service".

Although the Montana Power Company had no customers and no facilities in the area requiring additional transmission facilities they nevertheless opposed construction of a federal 161 KV line to Browning. Immediately, after the Congress directed negotiations between the Bureau of Reclamation and utilities in the area, the Montana Power Company began building a 115 KV line from Great Falls to Cut Bank. This action, before studies could begin, is consistent with the Company's history of constructing "spite lines", stealing cooperative loads, and opposing territorial protection legislation in the State.

Understandably, the cooperatives are most skeptical of any arrangement that requires good faith action on the part of the company.

In 1969, the Congress appropriated $450,000 to begin construction of the 161 KV line from Great Falls to Browning, but stipulated that monies should not be expended until efforts had been made to negotiate a satisfactory wheeling contract with the Company that would assure reliable service and guarantee adequate capacity to meet load growth of the cooperatives until Bonneville service was available in 1980. The Appropriations Committees directed the Bureau to report to the Committees before beginning construction if negotiations were unsuccessful.

Obviously, the negotiations between the Bureau of Reclamation and the Montana Power Company were of great interest to the cooperatives that so urgently needed more transmission capacity to meet their load growth requirements and to improve reliability. These negotiations were of great interest to Mid-West Electric Consumers Association in part because the cooperatives are our members; but equally important, because decisions made with respect to this particular situation can establish precedents that affect the federal power program on a nationwide basis.

Despite our great concern and the immediate and direct interest of the cooperatives, which concern was shared by all members of the Montana Congressional delegation, we had no dependable information on the terms of the proposed contract until the Montana delegation received on April 1, letters from Assistant Secretary Smith dated March 28, conveying copies of a contract that had already been executed by the Company. Although not explicit, the Assistant Secretary's letter made it clear that the Department considered the contract satisfactory and planned its early execution.

When we finally received copies of the proposed contract from the offices of the members of Congress, we found the agreements worse than anything we had predicted in our most pessimistic moments.

Even with the draft contract in hand, we found it almost impossible to believe that any agency of the United States would be an active partner in a course of action designed to create and maintain monopoly control over an essential feature of economic life. In the Northern Gas case, Justice brought action because Northern Natural's contracts precluded competition unless competitors could offer reduced prices. The Department of Interior would, by contract, bestow a perpetual transmission monopoly on Montana Power Company, with the Department's agreement in advance to pay for these facilities "an additional equitable charge as agreed to by the parties."

Because the Congress has by law given REA cooperatives special status as customers of federal power marketing agencies, we were equally astonished to find the Department agreeing to plan future power facilities in cooperation with Montana Power Company without any representation from the cooperatives or their own power suppliers. Despite Congressional mandates, the draft contract makes Montana Power Company the preferred power agency in Montana. *Legislative oversight is urgently needed.*

Many other features of the contract, such as the denial of Bonneville service to Glacier Electric and tapping provisions for Sun River Electric Cooperative, deserve careful review by the responsible Congressional Committee. We are confident that your Committee will arrange for that review.

We consider legislative review of the Administration's action in the power marketing area to be urgently needed, not just because of the proposed Montana transmission contract, but rather because a pattern is emerging that indicates that the Department of Interior is pursuing power marketing policies that not only modify established Executive branch policies, but seem to ignore Congressional directives as well. We should like to suggest that the Committee review, among other items, the following actions or contemplated actions of the Department of Interior.

(1) Contracts for the sale of power temporarily available from the Navajo Steam Plant to private power companies without any consideration whatsoever of the rights and needs of the public agencies in the region, despite the fact that the Congress specifically applied Reclamation Law to the Federal entitlement from the plant.

(2) The actions of the Bureau of Reclamation to refuse to accept additional applications for power and energy from municipal utilities, while simultaneously negotiating contracts for new sales to power companies in the Missouri Basin.

(3) Rate increases to be levied upon cooperatives in Missouri on an obviously discriminatory basis, and the apparent imminent announcement of rate increases in the Eastern Division of the Missouri River Basin, despite the Department's obligation to sell power at the lowest possible rates consistent with sound business principles. No information whatsoever has been made available to the Bureau's customers in the Missouri River Basin to substantiate the need for such a rate increase.

As noted earlier, the Mid-West Electric Consumers Association appreciates the Committee's decision to conduct these over sight hearings. We suggest the review be expanded and continued to include the items mentioned in this letter and other policy matters of concern to this Committee. We will be pleased to prepare additional information for the Committee use.

If appropriate, we should like to have this letter included in the Hearing record.

Very sincerely yours,

FRED G. SIMONTON,
Executive Director.

Senator ANDERSON. Senator Jordan.

Senator JORDAN. No questions.

Senator ANDERSON. Senator Hansen.

Senator HANSEN. I have no questions.

Senator ANDERSON. Thank you.

Mr. TROMMERSHAUSEN. Thank you.

Senator ANDERSON. Mr. J. H. McElwain, vice president of Montana Power Co.

Senator METCALF. Mr. Chairman, I want to welcome Mr. McElwain. He appeared only as an observer and I am delighted that he has decided to help us. He has much skill as an operator in the power field and has testified before many committees.

I am glad that you are here, Mr. McElwain.

STATEMENT OF J. H. McELWAIN, VICE PRESIDENT, MONTANA POWER CO.

Mr. MCELWAIN. Thank you, Senator Metcalf. I welcome the opportunity to try to define some of the issues that have been raised here with respect to the building of one or the other or the use of one or the other of these lines to take care of the needs of reliability and load growth in this area until 1980.

I say until 1980 because, Senator Metcalf, that date comes from some testimony of Mr. Bennett, former Assistant Director of the Bureau of Reclamation, back in some hearings before the Appropriations Committee a few years ago in which it was stated that there was contemplated service to the Glacier Electric Co-op by Bonneville sometime in the late 1970's.

I believe this service to Glacier Electric Coop comes about by reason of the provisions of the Bonneville Preference Act which was passed by Congress a few years ago which defined the service marketing area of the Bonneville Power Administration to the Continental Divide and areas of Utah, Wyoming, and Nevada plus a 75-mile area beyond that to serve certain cooperatives under certain conditions.

Two cooperatives in Montana fall within the category of that legislation; one of them is the Vigilante Electric Cooperative and the other one is the Glacier Electric Cooperative which is one of the cooperatives that would be served by this line.

Now if there is going to be service from Bonneville Power Administration in 1980, Senator Metcalf, there would be a line constructed presumably from somewhere in the Hungry Horse area over and make a connection at Browning with the 151 kilovolt line of the cooperative and that service would then be made from the Bonneville service area and from Bonneville Power Administration, and for that reason the requirements were made to 1980.

Senator METCALF. Now if the Chairman will indulge me.

Hungry Horse preference, so-called, in the service area of Bonneville and eastern Montana does not merely include Glacier Electric Co-op and Vigilante, it could include Hill County Co-op. If the grid were put in, there would be the Lower Yellowstone and every other REA cooperative in the State of Montana might be a part of the serviced area.

Mr. MCELWAIN. Senator, I have no intention to argue the legal ramifications of the Hungry Horse Preference Act as it relates to the Bonneville Preference Act which was passed by this Congress in order to make certain assurances to people in the Bonneville then marketing service area by reason of the lines being built by the Bureau of Reclamation and others down into the California area.

Senator METCALF. A part of that.

Mr. MCELWAIN. It is this provision that does specifically provide that the area at least extend 75 miles beyond the Continental Divide to certain cooperatives for service by Bonneville under certain conditions, and it is that provision and not by reason of any of the Hungry Horse Act per se in which Vigilante and Glacier may possibly have the right to be served by the Bonneville Power Administration. That is the only point I am trying to make.

I don't believe that the question of the Hungry Horse Act and its implications in Montana has any effect other than to that extent one way or the other in the controversy as to whether or not this contract should proceed.

I further think that there is nothing with respect to the national grid as such that has anything to do with whether or not this contract should proceed.

Senator METCALF. It does not make any difference whether you built 115 kilovolts or 161 kilovolts?

Mr. MCELWAIN. It makes no difference because neither one of them would be an integral part of a national grid which contemplates high tension lines from 500 kilovolts up, and neither one of these would qualify to have any material part in any national grid. Neither one of these lines would have any bearing one way or another on correcting any situation that now exists between the tie of the east and west systems of the Bureau of Reclamation and in which the Montana Power Co. is involved and which I might say the Montana Power Co. is not very happy about either.

We think that in many instances people are trying to go too fast, that tying this grid together just for the purpose of making a national grid per se may not be in the best interests of all concerned. We are willing to go along and try it to see if it works but we have some real

reservations about that tie operating as it operates under present circumstances.

Now to get down to the question which has been raised by the contract and its negotiations, I would like to clarify just one thing. The Montana Power Co. and the Bureau of Reclamation regional area negotiated a contract which was labeled "Draft, January 16, 1970." The Montana Power Co. was in accord with that draft. I am advised that that draft was forwarded to Washington, D.C., for approval.

Subsequent to that we were called back to Washington, D.C., and negotiations were engaged in which resulted in the draft of March 4. I had a call from the Bureau a few days ago and they wanted to know if the Montana Power Co. would be willing to go back to the draft of January 16, 1970, and I advised the Bureau that we were. We had agreed upon that draft when it was sent back to Washington, D.C. We were called back and further negotiations were had at the request of the Bureau.

Now we are perfectly willing to go back to that. I am advised by the Bureau that this draft and contract is the one which the cooperatives would prefer.

Senator METCALF. Now which one was put in the record?

Mr. MCELWAIN. The March 4, 1970, was put in the record.

Senator METCALF. I don't have the record any more than you do but I heard Mr. Armstrong. I want both contracts put in the record. How did you identify the January contract?

Mr. MCELWAIN. It is labeled "January 16, 1970."

Senator METCALF. Now does it contain the modifications to which Mr. Armstrong testified this morning?

Mr. MCELWAIN. I don't know that I could follow altogether Mr. Armstrong's modifications.

Senator METCALF. That is what I was objecting to, too.

Mr. MCELWAIN. But I recite to you the situation with respect to the modified contract as I understand it being the contract of January 16 or the draft of January 16, 1970. They have requested a provision in there that in future planning the cooperatives be included in a statement in the contract and we have advised the Bureau that we have no objection to that.

Senator METCALF. You are going to provide us a copy of the earlier contract?

Mr. MCELWAIN. I have a copy here and I will submit it to the committee for the record.

Senator METCALF. Very well.

Mr. MCELWAIN. I will get it submitted to the record.

(Both contracts have already been inserted in the record.)

I think this leaves only one or two comments and this has to do with the question of our ABM system and our problems out there with the Minuteman missile items, if there are any. Let me say that with respect to the letter of the colonel, or whoever the Air Force man was, about the area service that neither one of these lines would make one iota of difference in that service.

Senator METCALF. I didn't mean to leave that impression.

Mr. MCELWAIN. All right.

Senator METCALF. The point I was making is that in a much less sophisticated and much less complicated system fluctuations in an

area had caused serious detrimental effects, which prompted us to delve into this limitation. A much more delicate limitation is going to be in here and I wanted to know if it would be subject to simply fluctuations.

Mr. McElwain. With respect to the ABM system we and other suppliers in the area have been requested to make a proposal with respect to furnishing a portion of their load. Now basically I am advised by our engineers—and I hesitate to practice engineering as I hesitate to see an engineer practice law which sometimes happens—but our engineers do advise me that the ABM system as it is contemplated and built just north of Conrad, in that area, which is about half way between Cut Bank and Great Falls, that their generation being put in there actually makes this a more reliable system than if that generation were not there.

Now they have their own self-generation and the proposals that they are requesting are essentially backup material. They have the full capacity to take care of themselves, I believe, under any circumstances. Now they are not using that full capacity; they are coming and requesting some of that capacity to be furnished by somebody in the area. But basically the ABM system being there, I am advised, is going to help any reliability that there is in this area.

Senator Metcalf. You are talking about the one in or near Conrad or both?

Mr. McElwain. I am talking about the complex.

Senator Metcalf. You are talking about both of them?

Mr. McElwain. Right. I believe that we have diligently, sincerely, and with the greatest possible recognition of the problems of the area arrived at a solution and a contract which is beneficial to the Government—it is fair to the needs of the area. Some of these other problems, Senator, that you do bring up about Bonneville Power in the area are not relevant. We feel this is a good contract.

We are a little concerned about Senator Mansfield's charge that we are breaking any antitrust laws or that we are capturing any territory from people. This line was built essentially because one of the cooperatives refused to give the Continental Pipeline Co. the type of service that they required in the area. They came to us and we looked over the economics of what our future planning was and found that it would be economical to give them this service and that is the reason our line was constructed.

Senator, you are familiar with the law. We have a duty when somebody comes to us to request service to give them that service, and this is the reason we are up at Cut Bank with this line.

I appreciate very much the opportunity to make these comments.

Senator Anderson. Any questions, Senator Metcalf?

Senator Metcalf. I don't have any questions. I just want to say I don't completely concur, as the witness knows, but I think that it is important that this point of view be presented to this hearing and be a part of the record for this committee to consider. I am grateful that you decided to testify today, Mr. McElwain.

Mr. McElwain. I appreciate the opportunity. I am sorry that I may have wandered but I have only a few notes on which to discuss.

Senator Anderson. Senator Hansen.

Senator Hansen. I have no questions.

Senator Anderson. Thank you very much for appearing.

Mr. McElwain. Thank you.

Senator Anderson. Now we will hear from Mr. Harold C. Ebaugh, chairman of the Montanans for Reliable Electric Service and manager of the Hill County Electric Cooperative, Havre, Mont.

STATEMENT OF HAROLD C. EBAUGH, CHAIRMAN, MONTANANS FOR RELIABLE ELECTRIC SERVICE, AND MANAGER, HILL COUNTY ELECTRIC COOPERATIVE, HAVRE, MONT.

Mr. Ebaugh. Thank you, Mr. Chairman.

I have not prepared a written statement and I would request that you let me make an oral statement.

Senator Anderson. You may.

Mr. Ebaugh. Thank you very much.

I am sure that you have my name there. My name is Harold C. Ebaugh and I am from Havre, Mont. I am the manager of the Hill County Electric Cooperative which is one of the four cooperatives involved in the service in this general area. I might go back a little bit to say that I have served as a manager here for 24 years and prior to that I spent nearly 10 years with the Montana Power Co. so I have had some experience in operating distribution and transmission lines.

It might be said that I am a little bit bitter toward the Montana Power Co. but I was real happy that Mr. McElwain was here because we do have some very fine friends in the Montana Power Co.

I have testified before many committees here, particularly in regard to the Havre-Shelby transmission line, and I think that you can find nowhere in my testimony have I belittled the power company as to their ability to maintain and operate a good utility system. I think if you check the record you will find that I have complimented them on their management. While I do not agree in all respects with how they operate, they are a well managed utility and certainly make money for their stockholders. But about there is where we part company because I do not feel that the power company is acting in good faith in this negotiation and I, too, have been in on many of these negotiations.

I wonder what the power company really wants. I just can't agree with Mr. McElwain's statement that the cooperative refused and was unable to serve the Continental pipeline pumping load at Cut Bank because my information—from not only Mr. Beck but from Mr. Fossil, the engineer for that cooperative—proved beyond a shadow of a doubt to me that the cooperative was ready, willing, and able to serve that load and can still do it. If the power company can invest so much money in a transmission line from Conrad to Cut Bank to serve 3,000 kilowatts, I have to see it. I just can't help but feel they are in there for better reasons.

Senator Metcalf. How far is it from Conrad to Cut Bank?

Mr. Ebaugh. I would guess it is 27 miles. I am not up on the mileage. Is that about right, Mr. McElwain?

Mr. McElwain. Harold, I don't know.

Mr. Ebaugh. Twenty-five, twenty-seven miles. It is in that vicinity.

Senator Metcalf. I just wanted the record to show approximately the distance.

Mr. EBAUGH. Possibly the Montana company can justify their line from Great Falls to Conrad. I am sorry I don't have a blackboard and I am sorry you don't have a bigger map here because I know it is confusing to you people when we get up here and start talking about areas. Perhaps our Senators and Representatives from Montana and the other people here are familiar with it like I am of the general location.

The Havre-Shelby transmission line was brought about by the very company that is fighting today to hold this contract, the Montana Power Co., because back in 1947, I believe it was January 19—and the only reason I remember that date is because my son was born on that date—we went to the Montana Power Co.—I say we, the preference customers involved in this area—and asked the Montana Power Co. to lower their wholesale power which at that time was 9½ mills. They told us they would not consider the lowering of the wholesale power rate.

We immediately went to the Bureau of Reclamation and asked for a point of delivery on our system in Montana and particularly in this high line area from Havre west to Shelby and Cut Bank. If you read the record, you will find we fought for that for many years and were finally successful in getting this Bureau of Reclamation 115-kilovolt line from Havre to Shelby.

In order then for Glacier County Electric Cooperative, which is another 22 miles to Cut Bank where their importer is, in order for them to have reliable power rather than using their existing lines they built their own 115-kilovolt lines and later continued with this other 33 miles on into Browning. So you see we have a Bureau line from Havre to Shelby and a cooperatively owned line for the balance of the line. Now the power company comes down from Great Falls which is up to the south from there and comes into Conrad and you have 2.2 miles of line to no place, there is no line there yet.

Now this is what we are talking about on this additional $8,000 for carrying it. You are proposing in this contract that the Bureau pay the Montana Power Co. $66,000 for the use of having brought out today 25,000 kilowatts of capacity on the Great Falls-Cut Bank area line. Now this does not interconnect with the cooperative line. The additional 2.2 miles of line has to be agreed to by the cooperatives to enter, come in, and again then you would be paying $8,000 for the use of this facility, making your total $74,000.

Again it comes back in that there is no payment then to the cooperative by the Bureau or the Montana Power Co. for the use of the facilities from Cut Bank, this 22 miles back to Shelby which belongs to the co-op, nor does it provide any possible chance of reliable service up to Browning which is again to the west 33 miles. That is why we in the cooperative fought and why we have argued about the power company.

Mr. McElwain, if you would have built a 230-volt line from Great Falls into Cut Bank as you proposed in your hearing or as Mr. O'Connor proposed, I could not very well get up here and argue with you, but the line that the power company is building is inadequate for the job in my opinion.

The Bureau of Reclamation people, Mr. Trommershausen and the engineers of the Montana Power Co. made this computer study in the Montana Power Co.'s computer center in Butte along with some other studies that we made and they concluded themselves that it is no good,

and yet they have the right and the opportunity to stand up here and tell us that it is good and it is not good, it is not good for the area.

We have supported, we will continue to support. I think that the cooperatives are somewhat wrong in this thing in that we took a look at the original proposal to build from Great Falls to Shelby that the Bureau had and said this is not what we need. We want you to build it 161 from Great Falls to Browning so that the whole area will benefit by this. This was our mistake perhaps in trying to plan ahead for future uses. I think it just good business for the additional cost, the additional carrying cost, the difference between what the power company will get and what the Bureau carrying cost is on their 161 from Great Falls to Browning.

Incidentally, I don't know whether the record has ever shown this or not but Glacier County Electric Cooperative was to pay to the Bureau an additional $66,000, I believe was the figure, for this line through Browning because then they would not be required to build from Cut Bank to Browning to put in.

Senator Metcalf, I am sure you are familiar with that area. So you see the true figures are not coming out in this hearing. You have not got all the facts here yet. You have got facts here from people who want to sell their program to you but it is not for the best interest of the preference customers in this area.

Obviously many of us would like to see a line of only 70 miles from Hungry Horse over to Browning to bring Bonneville Power Administration power into the area but it would have to go through Glacier National Park and I am sure that you would have all kinds of trouble on the environmental thing at this time. But had the Montana Power Co. brought a 230-volt line from Great Falls or in the middle of their line, which is a line from the west side of Montana over the Continental Divide into what we call a 230-volt line, and nobody can convince me that there is not Bonneville power in that line. There has got to be Bonneville power in there in some form.

But had the power company instead of building this 115-volt line to Cut Bank brought a 230-volt line up to Cut Bank and then continued it on into that point as Mr. O'Connor said they might do some day, believe me we could get Bonneville power. And if Bonneville is so—I cannot use that word here—anxious to cooperate with us at this time, they could bring Bonneville power over to Cut Bank at this time and they would not have to wait until 1980. It is possible to do it.

Mr. Chairman and Senator Metcalf, I am sorry I did not prepare any notes because I could go on for hours and talk on this subject because I am certainly involved in it. I am involved in the defense program very, very strongly. I am dissatisfied with the service that I am presently getting from the Bureau of Reclamation and the point of delivery off the Havre-Shelby transmission line.

I am very concerned about a loop feed into that area. We happen to serve a radar base which is now a KORAD control center. I am sorry to report that the U.S. Government is now generating their own power at this Havre radar station and costing me about 25 percent of my load because of the inability of the Bureau of Reclamation to maintain constant voltage and to get away from this interconnection, this fluctuation that we are experiencing.

I was real happy that Mr. McElwain said that they were not in favor of this in its entirety per se because it is not doing the job. I think it is time, if you are to follow some dictates of good conscience here, that you certainly immediately take some steps for some high-voltage interconnections nationwide to get away from this subject. When a little cooperative like mine will lose a thousand kilowatts a load because of fluctuation which cannot be corrected by the service, I think we have an unreliable system in Montana.

I am deeply concerned over this. I don't think that this contract should be executed at this time. There are provisions in it which are not good for the interests of the Government or the cooperative. It does not provide tapping privileges as we would like to see. It does not provide, as Senator Metcalf pointed out or possibly Mr. Trommershausen—it does not provide for what it will cost us in the future if the power company builds these additional lines. I am real concerned over that. If I am losing load and have to pay more for my power, as I am doing every day, I am real concerned over it.

Senator METCALF. I could not add anything to what the witness has said.

Senator HANSEN. I have no questions, Mr. Chairman.

Senator ANDERSON. Thank you very much.

Mr. EBAUGH. Thank you very much for letting me appear.

Mr. MCELWAIN. Mr. Chairman, there is one matter I think needs clarifying in the record, if I might. There has been alluded to this matter of providing the Government with only 25 kilovolts of capacity in this line. These two contracts provide that the Government may have whatever capacity in this line they need to take care of their customers in the area and that capacity extends up to 50 and 60 kilovolts. With the additions of the capacitors, this line can carry 80 kilovolts.

Senator ANDERSON. This ends the hearing this morning, gentlemen. Thank you all very much.

The hearing is recessed subject to call of the Chair.

(Whereupon, at 12:35 p.m., the committee adjourned.)

APPENDIX

(Under authority previously granted, the following communications were ordered printed:)

[From the Congressional Record, Mar. 31, 1970]

R. W. BECK AND ASSOCIATES,
February 17, 1970.

Mr. DERMOT SHEA,
Executive Secretary, Consumers Council, Boston, Mass.

DEAR MR. SHEA: This is in reply to your letter of February 17th regarding the effects of voltage variation and specifically voltage reduction to electric appliances and equipment normally bound in homes and modernized commercial establishments.

Electric utilities have, in the past, been identified as maintaining a high level of service to their customers, and normally have been guided by two main criteria: service continuity and voltage level. Service continuity being identified as always having power available without even momentary interruption, and voltage level being identified as a voltage which had very little fluxuation.

The power companies in the New England area have recently found themselves in a very changed condition because of insufficient generating and transmission capacity to supply the electric power requirements of their consumers. Various articles have appeared in recent months, pointing out this critical power supply situation, and the industry itself is more than just a little concerned as to how they can meet these power supply demands. It has been interesting to note that very little information has been included in these articles on the effects the ultimate power consumer will see as a result of the power companies' failure to supply their consumers' requirements. Therefore, it was of great interest to me to see that your organization is investigating this area and pointing out some of the effects which will be felt by the individual home owner and business operator.

This lack of available electrical capacity has led to the electric utility companies' adoption of a program of voltage reduction which, in some areas of the country, is now being referred to as "load conservation." This, in effect, is a reduction in the voltage level of the power supply facilities which, in turn, reduces the overall load the companies are required to supply. Remembering our high school physics formula, power is the product of voltage potential and current flow, the power companies have utilized this basic formula to reduce their loads by reducing the voltage levels in amounts which have been identified to range up to 10 percent. Normally, the voltage regulation equipment located throughout the utilities' service area reinstate the desired voltage level when normal load variations cause this voltage to fluctuate and, in the past, this equipment has always provided a fairly constant voltage supply to each consumer. However, the present practice of the utilities of reducing this voltage during high load periods is amplified by the inability of this normally used voltage control equipment to handle these planned variations, and in some cases, can cause voltage variations at individual consumer homes in the range of 15 percent.

Some of the effects that the consumer will feel when the voltage level to his residence or business is reduced by 10 percent is (1) a 30 percent reduction in the light intensity from his incandescent lights, (2) heating equipment will have a near 20 percent reduction in output, (3) induction motors utilized in many types of appliances will have a near 20 percent reduction in their starting ability and an approximate 12 percent rise in their operating temperature, (4) fluorescent lamps now found in many homes and most commercial establishments will have their life cut by 20 percent besides having unsatisfactory starting and (5) electronic devices such as radios and television sets which are very sensitive to voltage fluctuation, will have a noticeable reduction in picture brilliance and sensitivity.

In summary, it can be said that the individual customer will receive a much less satisfactory operation of his electrical appliances under low voltage conditions and will be subject to earlier replacement because of shortened life.

The industrial consumer who has a large investment in automatic control equipment of the computer type and who utilizes electrical and automatic equipment to produce his product sees the effect of voltage reduction quickly and in some cases dramatically, when a substantial voltage variation occurs. Most of his equipment probably would have protective features to adjust for slight or, what can be considered in the past, normal variations in power supply voltage, but many of these facilities were not designed to handle large voltage variations. A momentary outage or severe voltage change causes most electrical equipment to either shut down or otherwise become inoperable. It is quite common for industries with highly mechanized equipment to look closely at the dependability and continuity of power supply service before locating their facilities. Many of the industries that are in the New England area can be identified as this type of industry.

I hope this information will be helpful to you and I would be happy to supply you with a list of references of publications and documents which substantiate the information discussed above.

If there is any other information which I can supply you in this regard, please contact me.

Very truly yours,

ROBERT G. TAYLOR,
Partner and Manager, Northeast Regional Office.

R. W. BECK AND ASSOCIATES,
Denver, Colo., January 30, 1970.

ROBERT O. MARRITZ,
Missouri Basin System Group,
Denver, Colo.

DEAR MR. MARRITZ: Pursuant to your request, we have analyzed the adequacy of the existing transmission system in the Shelby-Cut Bank-Browning area of Montana based upon the Joint Load-Flow Study (hereafter referred to as "Joint Study") of September 1968 by the Montana Power Company (MPCo) the Bureau of Reclamation (USBR) and Central Montana Generation and Transmission Cooperative (Central Montana G&T), and based upon later information furnished by you and members of Central Montana G&T Cooperative.

CONCLUSION

The Joint Study demonstrated that in order to avoid an area blackout in the Browning-Cut Bank-Shelby area for the loss of one critical line during peak load periods, the proposed USBR Great Falls-Browning 161-kv line or similar facility is required as soon as it can be constructed. This requirement is in addition to the MPCo Great Falls-Conrad-Cut Bank 115-kv line interconnected at Cut Bank. The next transmission line into the area subsequent to the proposed USBR line will be required prior to 1980. Additional load growth not contemplated in the Joint Study, notably the ABM missile loads, requires transmission additions even earlier than indicated in the Joiut Study. The above conclusions are discussed below:

DISCUSSION

Attached are two geographic sketches labeled SK–1 and SK–2. These sketches show the area loads as used in the Joint Study and the additional loads not contemplated in the study which now appears imminent.

The Joint Load-Flow Study by Montana Power Comapny, USBR, and Central Montana G&T of September 1968 assumed mutually agreed upon study criteria which included:

1. The loads to be used in the Load-Flow Computer Study would be 80% of peak load conditions.
2. With an outage of the most critical transmission line, the minimum voltage allowed on the 155-kv or 161-kv transmission system would be 90% of the nominal voltage rating for the load conditions represented on the computer.

The Load-Flow Case which shows the performance of the existing 115-kv system, including the Montana Power Company's Rainbow (Great Falls)-Conrad-Cut Bank 115-kv line interconnected at Cut Bank, is Case No. A2–70. For reference, a schematic computer print-out for Case A2–70 is attached, labeled SK–3. This Case shows the power flows and voltage levels with the most critical transmission line outage, the Rainbow (Great Falls)-Conrad 115-kv line. The voltages at Conrad and Browning drop to below 84% of the nominal voltage rating of 115 kv below the second criterion listed above. It is therefore clearly demonstrated that the existing system, including the Montana Power Company's Rainbow (Great Falls)-Conrad-Cut Bank 115-kv line interconnected at Cut Bank, is inadequate by 1970 based on the level of reliability agreed upon for the September 1968 Joint Load-Flow Study.

Although the combination of a MPCo Rainbow (Great Falls)-Conrad-Cut Bank 115-kv line and a USBR Great Falls-Browning 161-kv line was not specifically analyzed in the Joint Study, Case A1E1–78X of the Joint Study represents what appears to be the critical outage for this combination of transmission lines. The critical single outage for this combination of transmission facilities would be an outage of the proposed USBR Great Falls-Browning 161-kv line, as this provides the greatest amount of support into the area. For reference, a schematic computer print-out of Case A1E1–78X is attached, labeled SK–4. It is apparent from Case A1E1–78X that, based on the level of reliability and projected loads agreed upon for the September 1968 Joint Load-Flow Study, the addition of the proposed USBR Great Falls-Browning 161-kv line would provide an adequate area transmission system until about 1978. However, in addition to the MPCo. Rainbow (Great Falls)-Conrad-Cut Bank 115-kv line interconnected at Cut Bank and the proposed USBR Great Falls-Browning 161-kv line, another transmission line will be required into the area prior to 1980 based on the Joint Study criteria.

It is noteworthy that both USBR and Central Montana G&T engineers usually base their studies on 100% rather than 80% of peak loading. This would result in a more severe loading test of the transmission system. Considering the amount of load and large area involved, and the nature of the load, the more severe reliability criteria may be required, resulting in the addition of transmission facilities about two or three years earlier than discussed above.

All of the above discussion, particularly regarding the timing of transmission facilities, is based on load projections compiled for the September 1968 Study. Subsequent to the September 1968 Study, the Department of Defense has made inquiry regarding power supply relative to the installation of ABM missiles in the area. The projected ABM and associated load is estimated to be 15.75 mw. When compared to a total area load in 1970 of about 49 mw, this represents an unforseen increase in the area loads of over 30%. This increase in load makes the necessary transmission additions in the area even more urgent.

If we may be of further assistance, please feel free to contact us.

Very truly yours,

W. E. Trommershausen,
Chief Consulting Engineer.

1970 PEAK LOAD ESTIMATES

BASED ON MP CO - USBR - CENTRAL MONT. G&T JOINT STUDY OF SEPT 1968

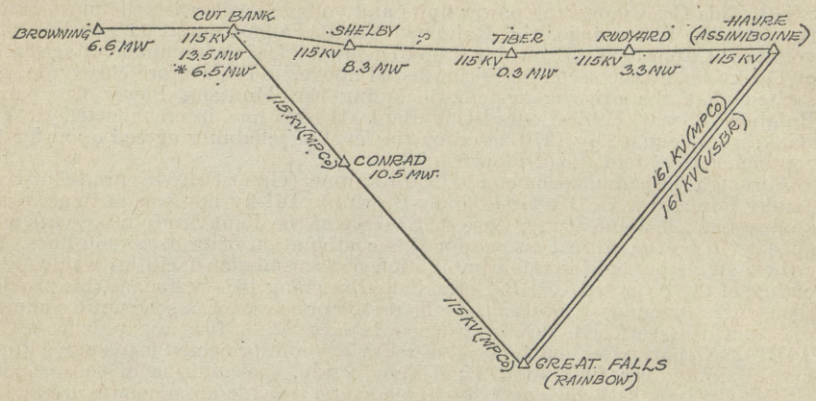

MPCo. Motor Load not included in Sept 1968 study

Prepared By
R.W. BECK AND ASSOCIATES
January 1970

1978 PEAK LOAD ESTIMATES

BASED ON MP CO - USBR - CENTRAL MONT. G&T JOINT STUDY OF SEPT. 1968

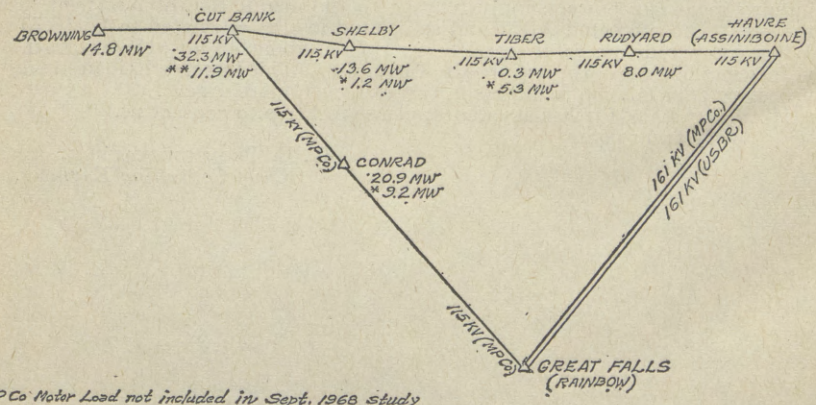

MP Co Motor Load not included in Sept. 1968 study

ABM Missile Loads not included in Sept. 1968 study

Prepared By
R.W. BECK AND ASSOCIATES
January 1970

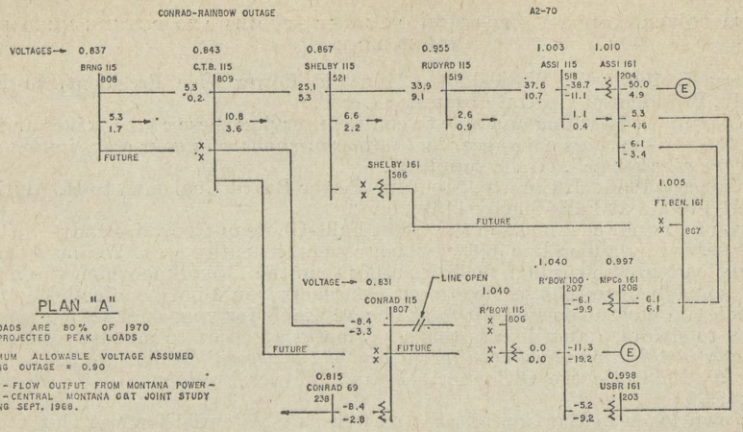

PLAN "A"

LOADS ARE 80% OF 1970 PROJECTED PEAK LOADS

MINIMUM ALLOWABLE VOLTAGE ASSUMED DURING OUTAGE = 0.90

LOAD - FLOW OUTPUT FROM MONTANA POWER - USBR - CENTRAL MONTANA G&T JOINT STUDY DURING SEPT. 1968.

REVISED - 1/28/70 - BY R.W. BECK AND ASSOCIATES (ADDED NOTES AND MISSING FLOWS)

PREPARED BY
R.W. BECK AND ASSOCIATES
JANUARY, 1970

SK-2

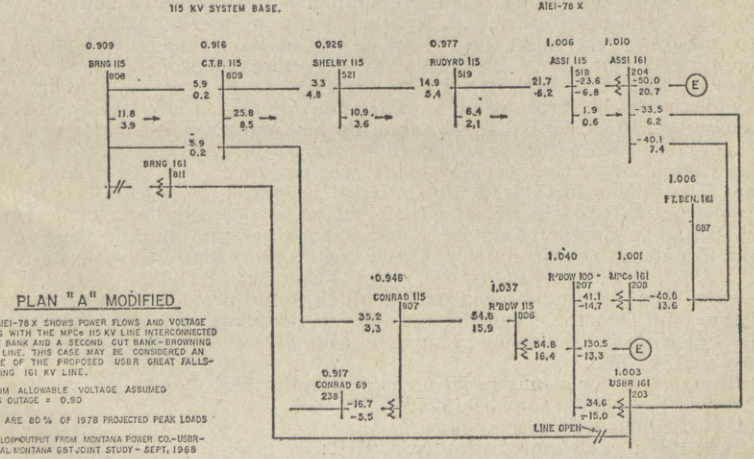

PLAN "A" MODIFIED

CASE AIEI-78 X SHOWS POWER FLOWS AND VOLTAGE LEVELS WITH THE MPCo 115 KV LINE INTERCONNECTED AT CUT BANK AND A SECOND CUT BANK - BROWNING 115 KV LINE. THIS CASE MAY BE CONSIDERED AN OUTAGE OF THE PROPOSED USBR GREAT FALLS - BROWNING 161 KV LINE.

MINIMUM ALLOWABLE VOLTAGE ASSUMED DURING OUTAGE = 0.90

LOADS ARE 80% OF 1978 PROJECTED PEAK LOADS

LOAD FLOW OUTPUT FROM MONTANA POWER CO.-USBR-CENTRAL MONTANA G&T JOINT STUDY - SEPT. 1968

REVISED - 1/28/70 - BY R.W. BECK AND ASSOCIATES (ADDED NOTES, DELETED UNUSED LINES, ADDED GREAT FALLS - BROWNING LINE)

PREPARED BY
R.W. BECK AND ASSOCIATES
JANUARY, 1970

SK-3

BACKGROUND PAPER PREPARED BY W. E. TROMMERSHAUSEN

MONTANA POWER COMPANY'S POSITION ON JOINT STUDIES AND FUTURE NEED FOR ADDED LINES

January 7, 1965: W. W. Talbott, Montana Power Vice President, to Leo Carmody, President of Central Montana G. & T.:

"The Company is willing and able to continue serving these cooperatives and in view of the above *it does not appear that further meetings with your organization are appropriate at this time*". (Italic supplied).

November 4, 1966: J. Corette, Montana Power Board Chairman to H. Aldrich of USBR—re Great Falls-Shelby 115kv line:

"As you know our customers in the Great Falls-Choteau-Conrad, Brady-Dutton area are served by a loop line [69kv] which covers the entire area. We have plans to handle load growth through facilities other than the 115kv line which you have in mind so we believe that service to our customers would not be affected by the line which you have suggested—it might be advisable for your engineering people and ours to sit down and discuss this situation in an effort to mutually explore, *what if any justification might exist for the line you propose.*" (Italic supplied.)

April 29, 1968: George O'Connor, Montana Power President, to H. Aldrich, USBR:

"Our own loads in the Conrad area as well as a potential load at Cut Bank indicate that we will need substantial transmission shortly. This would indicate that the *very minimum* that we would construct into the Cut Bank area would be a 115kv line." (Italic supplied.)

May 6, 1968: G. O'Connor in testimony before Senate and House Appropriations Committees:

"With the construction of our 115kv line from Great Falls to Cut Bank, the Bureau line to Browning would be unnecessary as our line would provide the necessary loop service *to give the area the service reliability for a substantial period in the future.*" (Italic supplied.)

August 6, 1968: W. W. Talbot to George Lewis (USBR):

" 'Our studies [independent] have been completed and our position on the 115kv line has been further substantiated. In view of this we are immediately making plans to start construction on the 115kv line to Cut Bank which is scheduled for completion in the summer of 1969.' We have the Bureau's projected *load requirements through 1975.* Under the above proposal we would agree to have firm line capacity for the presently projected requirements *through 1975.*" (Italic supplied.)

September 25, 1968: USBR to Montana Power Company (O'Connor):

"Basically the plan agreed upon [as the result of the September 23rd meeting with the Company] is that the Company will construct a 115kv transmission line from Great Falls to Conrad to Cut Bank as soon as practical. The Bureau would construct a 161kv line from Great Falls area to Shelby for completion in 1972 or 1973. The Company agrees to assist the Bureau in obtaining authorization from Congress to construct the 161kv facilities as a part of the overall plan."

May 2, 1969: Letter to FPC from George O'Connor of MPC:

"We have a facility under construction which would provide, *for several years,* the reliable loop feed to serve the needs of the Cooperative." (Italic supplied.)

Summary: Note the following changes in *time periods* for effective use of the Company's 115kv line.

May 1968—"for a *substantial period* in the future."

August 6, 1968—"*Through 1975.*"

May 2, 1969—"for *several years.*"

August 8, 1969: O'Connor to Bradly, USBR:

"The MPC does not believe that conditions of future power needs are jelled enough at this time to determine what, where and when the next additional transmission should be added to the area."

MAY 14, 1970.

Mr. ELLIS L. ARMSTRONG,
Commissioner of Reclamation, Department of the Interior,
Washington, D.C.

DEAR COMMISSIONER ARMSTRONG: The Committee has received your material for inclusion in the record of the April 23 legislative oversight hearing regarding a proposed contract for power transmission service to the Shelby-Cut Bank-Browning area in Montana. I appreciate your cooperation in providing the information.

Inspection of the record, however, indicates that some questions concerning the reliability of the system which would be provided under the terms of the contract remain unresolved. I would appreciate having for the record your response to the following question along with whatever amplifying discussion you may wish to provide.

The Western Systems Coordinating Council has agreed upon reliability criteria for transmission systems. Based upon the forseeable loads, and assuming the proposed wheeling contract with Montana Power Company is implemented, will the transmission system serving the Shelby-Cut Bank-Browning area meet the minimum reliability criteria for the three year period immediately following the connection of the Montana Power Company's line at Cut Bank?

Sincerely yours,

HENRY M. JACKSON, *Chairman.*

U.S. DEPARTMENT OF THE INTERIOR,
BUREAU OF RECLAMATION,
Washington, D.C., June 8, 1970.

Hon. HENRY M. JACKSON,
U.S. Senate, Washington, D.C.

DEAR SENATOR JACKSON: In reply to your letter of May 14, 1970, we offer the following comments for the record on the question of the Shelby-Cut Bank-Browning area transmission system meeting the minimum reliability criteria for transmission systems as agreed upon by the Western Systems Coordinating Council.

The reliability criteria which the Western Systems Coordinating Council has essentially agreed upon, but not yet formally adopted, are intended primarily for design purposes to minimize the effects of disturbances of one major power system upon the operations of other major interconnected power systems. Since the transmission facilities in the area bounded by Great Falls, Havre, and Browning are on the end of the existing transmission system and do not interconnect to adjacent systems, a disturbance on the network within this area will not affect neighboring systems, and therefore, strictly speaking, should not violate the intent of the reliability standards of the WSCC. If additional interconnections are made to this system in the future, this condition may not be true.

We would point out that if the area bounded by Great Falls, Havre, and Browning were to be considered as a "system" it could not meet the WSCC criteria requiring a system to withstand a single contingency of either the Great Falls-Cut Bank or the Havre-Shelby line out of service, without the addition of voltage correction equipment. Further, to meet the double contingency case of one line feeding the area out of service and the then loss of the remaining input line, firm load will, of course, be necessarily shed, and the system, therefore, will not meet the WSCC criteria. Under these conditions, it then becomes an economic decision as to the amount of money that can be spent to provide the degree of reliability desired within an isolated area.

Sincerely,

G. G. STAMM,
(Acting for Ellis L. Armstrong, *Commissioner*).

○