AUTHENTICATED
U.S. GOVERNMENT
INFORMATION
GPO

H.R. 2278, THE RESPONSIBLE DISPOSAL REAUTHORIZATION ACT OF 2017; AND H.R. 2389, TO REAUTHORIZE THE WEST VALLEY DEMONSTRATION PROJECT AND FOR OTHER PURPOSES

HEARING

BEFORE THE

SUBCOMMITTEE ON ENVIRONMENT

OF THE

COMMITTEE ON ENERGY AND COMMERCE
HOUSE OF REPRESENTATIVES

ONE HUNDRED FIFTEENTH CONGRESS

SECOND SESSION

MAY 18, 2018

Serial No. 115–130

Printed for the use of the Committee on Energy and Commerce
energycommerce.house.gov

U.S. GOVERNMENT PUBLISHING OFFICE
32–962 WASHINGTON : 2019

COMMITTEE ON ENERGY AND COMMERCE

GREG WALDEN, Oregon
Chairman

JOE BARTON, Texas
Vice Chairman
FRED UPTON, Michigan
JOHN SHIMKUS, Illinois
MICHAEL C. BURGESS, Texas
MARSHA BLACKBURN, Tennessee
STEVE SCALISE, Louisiana
ROBERT E. LATTA, Ohio
CATHY MCMORRIS RODGERS, Washington
GREGG HARPER, Mississippi
LEONARD LANCE, New Jersey
BRETT GUTHRIE, Kentucky
PETE OLSON, Texas
DAVID B. MCKINLEY, West Virginia
ADAM KINZINGER, Illinois
H. MORGAN GRIFFITH, Virginia
GUS M. BILIRAKIS, Florida
BILL JOHNSON, Ohio
BILLY LONG, Missouri
LARRY BUCSHON, Indiana
BILL FLORES, Texas
SUSAN W. BROOKS, Indiana
MARKWAYNE MULLIN, Oklahoma
RICHARD HUDSON, North Carolina
CHRIS COLLINS, New York
KEVIN CRAMER, North Dakota
TIM WALBERG, Michigan
MIMI WALTERS, California
RYAN A. COSTELLO, Pennsylvania
EARL L. "BUDDY" CARTER, Georgia
JEFF DUNCAN, South Carolina

FRANK PALLONE, JR., New Jersey
Ranking Member
BOBBY L. RUSH, Illinois
ANNA G. ESHOO, California
ELIOT L. ENGEL, New York
GENE GREEN, Texas
DIANA DEGETTE, Colorado
MICHAEL F. DOYLE, Pennsylvania
JANICE D. SCHAKOWSKY, Illinois
G.K. BUTTERFIELD, North Carolina
DORIS O. MATSUI, California
KATHY CASTOR, Florida
JOHN P. SARBANES, Maryland
JERRY MCNERNEY, California
PETER WELCH, Vermont
BEN RAY LUJÁN, New Mexico
PAUL TONKO, New York
YVETTE D. CLARKE, New York
DAVID LOEBSACK, Iowa
KURT SCHRADER, Oregon
JOSEPH P. KENNEDY, III, Massachusetts
TONY CÁRDENAS, CaliforniaL RUIZ, California
SCOTT H. PETERS, California
DEBBIE DINGELL, Michigan

SUBCOMMITTEE ON ENVIRONMENT

JOHN SHIMKUS, Illinois
Chairman

DAVID B. MCKINLEY, West Virginia
Vice Chairman
JOE BARTON, Texas
TIM MURPHY, Pennsylvania
MARSHA BLACKBURN, Tennessee
GREGG HARPER, Mississippi
PETE OLSON, Texas
BILL JOHNSON, Ohio
BILL FLORES, Texas
RICHARD HUDSON, North Carolina
KEVIN CRAMER, North Dakota
TIM WALBERG, Michigan
EARL L. "BUDDY" CARTER, Georgia
JEFF DUNCAN, South Carolina
GREG WALDEN, Oregon *(ex officio)*

PAUL TONKO, New York
Ranking Member
RAUL RUIZ, California
SCOTT H. PETERS, California
GENE GREEN, Texas
DIANA DEGETTE, Colorado
JERRY MCNERNEY, California
TONY CÁRDENAS, California
DEBBIE DINGELL, Michigan
DORIS O. MATSUI, California
FRANK PALLONE, JR., New Jersey *(ex officio)*

CONTENTS

	Page
Hon. John Shimkus, a Representative in Congress from the State of Illinois, opening statement	1
Prepared statement	3
Hon. Paul Tonko, a Representative in Congress from the State of New York, opening statement	4
Hon. Greg Walden, a Representative in Congress from the State of Oregon, prepared statement	49

WITNESSES

Hon. Tom Reed, a Representative in Congress from the State of New York	6
Prepared statement	8
Mark Gilbertson, Associate Principal Deputy Assistant Secretary for Regulatory and Policy Affairs, Office of Environmental Management, Department of Energy	10
Prepared statement	12
Answers to submitted questions	58
Noah Shaw, General Counsel and Secretary, New York State Energy Research and Development Authority	21
Prepared statement	23
Answers to submitted questions	64

SUBMITTED MATERIAL

Statement of Carmelo Melendez, U.S. Department of Energy	50
Answers to submitted questions	54
Statement of the Colorado Department of Public Health and Environment	52
Letter of May 18, 2018 from Hon. Scott R. Tipton, a Representative in Congress from the State of Colorado, to the subcommittee	53

H.R. 2278, THE RESPONSIBLE DISPOSAL REAUTHORIZATION ACT OF 2017; AND H.R. 2389, TO REAUTHORIZE THE WEST VALLEY DEMONSTRATION PROJECT AND FOR OTHER PURPOSES

FRIDAY, MAY 18, 2018

HOUSE OF REPRESENTATIVES,
SUBCOMMITTEE ON ENVIRONMENT,
COMMITTEE ON ENERGY AND COMMERCE
Washington, DC.

The subcommittee met, pursuant to call, at 9:00 a.m., in room 2123, Rayburn House Office Building, Hon. John Shimkus, (chairman of the subcommittee) presiding.

Present: Representatives Shimkus, McKinley, Johnson, Flores, Walberg, Duncan, Tonko, and Green.

Staff Present: Samantha Bopp, Staff Assistant; Daniel Butler, Staff Assistant; Kelly Collins, Legislative Clerk, Energy and Environment; Margaret Tucker Fogarty, Staff Assistant; Jordan Haverly, Policy Coordinator, Environment; Zach Hunter, Director of Communications; Mary Martin, Chief Counsel, Energy and Environment; Drew McDowell, Executive Assistant; Peter Spencer, Senior Professional Staff Member, Energy; Austin Stonebraker, Press Assistant; Everett Winnick, Director of Information Technology, Priscilla Barbour, Minority Energy Fellow; Rick Kessler, Minority Senior Advisor and Staff Director, Energy and Environment; Jourdan Lewis, Minority Staff Assistant; Alexander Ratner, Minority Policy Analyst; Tuley Wright, Minority Energy and Environment Policy Advisor; and Catherine Zander, Minority Environment Fellow.

OPENING STATEMENT OF HON. JOHN SHIMKUS, A REPRESENTATIVE IN CONGRESS FROM THE STATE OF ILLINOIS

Mr. SHIMKUS. The Subcommittee on the Environment will now come to order.

The chair will recognize himself for 5 minutes for an opening statement.

Thank you for joining us at this morning's hearing to review legislation to reauthorize two projects within the Department of Energy's portfolio of environmental remediation activities.

I am pleased to report that last week, the House overwhelmingly passed the Nuclear Waste Policy Amendments Act of 2018. This long overdue legislation provides a disposal path for commercial spent nuclear fuel and our nation's defense high-level radioactive

waste. This defense waste material requires the most careful handling and the most stringent isolation requirements in the Federal Government's inventory. However, extensive decontamination work remains to be accomplished across the country at DOE sites.

DOE's Office of Environmental Management faces a significant workload to complete decontamination work at legacy Cold War sites. Since its establishment about 30 years ago, Environmental Management has successfully remediated 92 sites, but the most technologically challenging projects remain in process at 17 locations.

This morning, Mr. Mark Gilbertson will represent the Department on issues addressed in the legislature proposals. Since this committee last discussed the critical programs under the Office of Environmental Management, the Department has welcomed a new Assistant Secretary, Anne White. We look forward to working with Assistant Secretary White on the rest of Environmental Management's portfolio.

Our hearing today will discuss one of the Department's unique projects. During the early years of our nation's civilian nuclear industry, New York State leased land to a private entity to demonstrate the feasibility of reprocessing spent nuclear fuel. The legacy cleanup at the site, known as West Valley Demonstration Project, is jointly overseen by DOE and the New York State Energy Research and Development Authority, on behalf of New York State.

Prior to his election to Congress, the ranking member of this subcommittee, Mr. Tonko, was the President and CEO of NYSERDA. I look forward to the unique perspective and the interests he brings to this morning's hearing based on his previous experience.

In 1980, Congress passed the West Valley Demonstration Project Act to direct DOE to partner with New York to address legacy environmental issues, and authorized $5 million to spend on this project for fiscal year 1981. The project has not been reauthorized since, and Congressman Reed's bill provides Congress a chance to review the project. The lingering question of how to dispose of the high-level radioactive waste, which was generated prior to passage of the Nuclear Waste Policy Act, is an important one that needs further examination.

I welcome my colleague here this morning, and thank Mr. Reed whenever he shows up, for his leadership on behalf of his constituents to bring attention to ongoing issues at the West Valley site.

DOE will provide context regarding key upcoming milestones and remaining challenges at the West Valley site, while NYSERDA will give a voice to the New York State government. These respective viewpoints provide this subcommittee important information as Congress considers the next steps at the site.

We will also receive testimony on a bipartisan bill sponsored by Congressman Tipton to extend the authorization of the Grand Junction, Colorado, disposal cell. Mining and processing uranium generate a byproduct known as uranium mill tailings. Congress passed the Uranium Mill Tailings Radiation Control Act 40 years ago to establish a framework for DOE to dispose of mill tailings. The bill also authorized the Grand Junction, Colorado, site to serve as a disposal location.

H.R. 2278, the Responsible Disposal Reauthorization Act, extends the site's authorization for another 25 years. The proactive reauthorization exemplifies the foresight needed for these disposal sites to plan accordingly.

I am pleased to hold the hearing today, and I look forward to the testimony.

And with that, I have a minute remaining. Does anyone seek the rest of my time?

Seeing none, the chair now recognizes the ranking member of the subcommittee, Mr. Tonko, for 5 minutes.

[The prepared statement of Mr. Shimkus follows:]

PREPARED STATEMENT OF HON. JOHN SHIMKUS

Thank you for joining us at this morning's hearing to review legislation to reauthorize two projects within the Department of Energy's (DOE) portfolio of environmental remediation activities.

I am pleased to report that last week the House overwhelmingly passed the Nuclear Waste Policy Amendments Act of 2018. This long-overdue legislation provides a disposal path for commercial spent nuclear fuel and our nation's defense high-level radioactive waste. This defense waste material requires the most careful handling and the most stringent isolation requirements in the Federal government's inventory; however, extensive decontamination work remains to be accomplished across the country at DOE sites.

DOE's Office of Environmental Management faces a significant workload to complete decontamination work at legacy Cold War sites. Since its establishment about 30 years ago, EM has successfully remediated 92 sites, but the most technologically challenging projects remain in process at 17 locations.

This morning Mr. Mark Gilbertson will represent the Department on the issues addressed in the legislative proposals. Since this Committee last discussed the critical programs under the Office of Environmental Management, the Department has welcomed a new Assistant Secretary, Anne White. We look forward to working with Assistant Secretary White on the rest of EM's portfolio.

Our hearing today will discuss one of the Department's unique projects. During the early years of our nation's civilian nuclear industry, New York State leased land to a private entity to demonstrate the feasibility of reprocessing spent nuclear fuel. The legacy cleanup at the site, known as the West Valley Demonstration Project, is jointly overseen by DOE and the New York State Energy Research and Development Authority, on behalf of New York State.

Prior to his election to Congress, the Ranking Member of this Subcommittee, Mr.Tonko, was the President and CEO of NYSERDA. I look forward to the unique perspective and interest he brings to this morning's hearing based on his previous experience.

In 1980, Congress passed the West Valley Demonstration Project Act to direct DOE to partner with New York to address legacy environmental issues and authorized five million dollars to spend on this project for Fiscal Year 1981. The project has not been reauthorized since and Congressman Reed's bill provides Congress a chance to review the project. The lingering question of how to dispose of the high-level radioactive waste, which was generated prior to passage of the Nuclear Waste Policy Act, is an important one that needs further examination.

I welcome my colleague here this morning and thank Mr. Reed for his leadership on behalf of his constituents to bring attention to ongoing issues at the West Valley site.

DOE will provide context regarding key upcoming milestones and remaining challenges at the West Valley site, while NYSERDA will give a voice to the New York State government. These respective viewpoints provide this Subcommittee important information as Congress considers the next steps at the site.

We will also receive testimony on a bipartsian bill sponsored by Congressman Tipton to extend the authorization of the Grand Junction, Colorado disposal cell. Mining and processing uranium generate a byproduct known as uranium mill tailings. Congress passed the Uranium Mill Tailings Radiation Control Act 40 years ago to establish the framework for DOE to dispose of mill tailings. The bill also authorized the Grand Junction, Colorado site to serve as a disposal location.

H.R. 2278, the Responsible Disposal Reauthorization Act, extends the site's authorization for another 25 years. The proactive reauthorization exemplifies the foresight needed for these disposal sites to plan accordingly.

I am pleased to hold this hearing today and look forward to the testimony.

OPENING STATEMENT OF HON. PAUL TONKO, A REPRESENTATIVE IN CONGRESS FROM THE STATE OF NEW YORK

Mr. TONKO. Thank you, Mr. Chair.

And, first, let me welcome our colleague from New York, Mr. Reed, to discuss his bill on the West Valley Demonstration Project. Thank you for your interest, Tom. It is an important part of the energy concept in New York and environmental concerns.

I also want to welcome our other witnesses, Mark Gilbertson of DOE's Office of Environmental Management, and Noah Shaw, who I am proud to say is representing my former employer, the New York State Energy Research and Development Authority. NYSERDA is, I think, a great collection of consummate professionals. Thank you, Noah, for being part of that and for the legal expertise you provide and for your commitment to West Valley. It is incredibly important.

Thank you both for joining us for this legislative hearing on two bills: H.R. 2278, the Responsible Disposal Reauthorization Act of 2017; and H.R. 2389, to reauthorize the West Valley Demonstration Project.

While this committee, under the leadership of Chair Shimkus, has made progress in addressing some of our nation's most significant nuclear waste challenges, a number of outstanding issues remain.

DOE's Office of Environmental Management was established to remediate sites contaminated with high-level radioactive waste, spent nuclear fuel, excess uranium and plutonium, and contaminated soil and groundwater. These sites located across the country are dealing with the legacy of our nation's entry into the atomic age.

The Uranium Mill Tailings Radiation Control Act established a process for remediating an active uranium or processing sites, such as the site in Grand Junction, Colorado. H.R. 2278 would authorize DOE to continue to operate the Cheney Disposal Cell until September 30 of 2048, or until the disposal cell is filled to capacity. Currently, DOE is authorized to operate this cell through September of 2023.

I want to give some additional attention to Mr. Reed's legislation. The bill authorizes some $75 million for the West Valley Demonstration Project for fiscal years 2017 through 2026. This is identical to the amount appropriated in fiscal year 2018, and will ensure the cleanup will continue on schedule. But West Valley is a unique site. Its history is unlike other properties, and this has caused the point of disagreement between the relevant stakeholders for decades, which is addressed in the other provision of H.R. 2389.

From 1966 through 1972, the Western New York Nuclear Service Center was the only privately-owned facility for spent nuclear fuel reprocessing in the United States. When that business ceased operating, the site eventually reverted back to its owner, New York

State. And, of course, DOE's predecessor, the Atomic Energy Commission, was intimately involved in the operation of the site.

Approximately 60 percent of the spent nuclear fuel reprocess at the site came from Hanford, and 80 percent of the recovered plutonium was returned to Hanford. Ultimately, this activity resulted in transuranic waste and high-level nuclear waste continuing to be stored at that site.

This bill is not the first time Congress has had to consider a unique solution to address West Valley. In 1980, Congress passed the West Valley Demonstration Project Act, which directed DOE to carry out high-level radioactive waste management. This bill made DOE responsible for 90 percent of the cost of the site's cleanup. And 2 years later, the Nuclear Waste Policy Act made it clear that costs resulting from permanent disposal of high-level radioactive waste from atomic energy defense activities should be paid by the Federal Government. However, since 1986, based on a DOE IG report, DOE has classified the high-level waste at West Valley as commercial waste, rather than waste deriving from atomic energy defense activities.

Under this formulation, DOE believes the cost for disposal of the waste should be borne by the State of New York due to its ownership of the site, and that is the crux of the disagreement. I understand that DOE will reiterate that under the statute. It cannot own the waste at West Valley. But that is immaterial to the question of who is responsible for bearing the cost of cleaning up and disposing of it.

The standard under the Nuclear Waste Policy Act is whether the waste was generated in whole or in part from any atomic energy defense activity or at any facility used in connection with any such activity. Under the Act it is either defense related or not.

So where the waste generated, as a result of atomic energy defense activities, I think the record is clear that this is the case for West Valley. The high-level radioactive waste and transuranic waste left at this site are primarily from atomic energy defense activities and should be disposed of as such, but obviously this issue remains unsettled, which is why we are here today.

I look forward to a full debate on West Valley this morning. And even if this bill does not move forward, I will continue to urge DOE to engage with the State of New York to try to each an understanding on this critical issue.

So, Mr. Chair, I thank you again, and yield back, and look forward to hearing from our witnesses.

Mr. SHIMKUS. The gentleman yields back his time.

The Chair doesn't see the chairman of the full committee nor the ranking member, so with that, we will conclude our member opening statements.

The Chair would like to remind members that pursuant to committee rules, all members' opening statements will be made part of the record.

We want to thank all our witnesses for being here today and taking the time to testify before this subcommittee. Today's witnesses will have the opportunity to give opening statements followed by a round of questions, although we usually don't question Members of Congress, especially you.

Mr. TONKO. There was a key word there: "usually."

Mr. SHIMKUS. That is right.

Our first witness panel for today's hearing includes the Honorable Tom Reed, Member of the U.S. House of Representatives, from the great State of New York. With that, sir, you are recognized for 5 minutes.

STATEMENT OF HON. TOM REED, A REPRESENTATIVE IN CONGRESS FROM THE STATE OF NEW YORK

Mr. REED. Well, thank you very much, Chairman. And good morning to my colleagues, to the Ranking Member Tonko and my fellow colleagues on the committee today. Thank you for an opportunity to address you and to offer testimony in regards to the legislation.

I am proud to have introduced H.R. 2389, to reauthorize the West Valley Demonstration Project, along with my colleagues, Congressman Nadler and Higgins, and the late Congresswoman Slaughter.

Nuclear cleanup sites must be at the top of the priority list. There are still nuclear sites in the United States that need to be managed and cleaned up. The Western New York Nuclear Service Center in my district is one such site.

The Department of Energy estimates that making the investments needed now in nuclear site remediation will save our nation hundreds of millions of dollars in the coming decades. The cleanup at this site, designated the West Valley Demonstration Project, is very important to our constituents in New York State, as nuclear waste cleanup is a matter of environmental health and the health and safety of our fellow citizens.

I have worked with the constituents on the West Valley Citizen Task Force, the Department of Energy, State and local officials, along with my colleagues in Congress, to raise awareness about the need for consistent funding at this facility. Given the public safety issue of dealing with radioactive waste and the long-term cost savings, this bill makes good sense from a governmental and a financial standpoint.

H.R. 2389 will provide the necessary resources over a sufficient number of years to continue the cleanup work required by the Demonstration Project Act. At its core, the Western New York Nuclear Service Center was an Atomic Energy Commission project. And because New York State was encouraged by the AEC to develop it, the Federal Government should provide a disposal path for all waste on the site.

Records show that the majority of waste at the site was the result of reprocessing federally owned nuclear fuel, most of it from the Federal Government's Hanford facility in Washington State. The result of that reprocessing then went to the Federal Government, in some part for weapons research or weapons use.

In summary, this bill will authorize sufficient funding to continue the cleanup work and reduce overall life cycle costs and treat all radioactive waste at the site as resulting from the atomic energy defense activities. I appreciate your commitment to this important issue, and encourage you and your staffs to continue work-

ing with our office, as we will work with you to solve this important issue.

Thank you very much for your time this morning. I do look forward to your questions, but hopefully you will honor the commitment of not asking those questions of your witness before you.

With that, I yield back the balance of my time.

[The prepared statement of Mr. Reed follows:]

Testimony of Congressman Tom Reed
New York, 23rd Congressional District

Hearing of the House Energy and Commerce Subcommittee on Environment
May 18, 2018

Good morning, Chairman Shimkus, Ranking Member Tonko, and members of the Committee. I would like to thank you for bringing this legislation before the Committee today. I am proud to have introduced this legislation, H.R. 2389, to reauthorize the West Valley Demonstration Project along with my colleagues Congressmen Nadler and Higgins, and the late Congresswoman Slaughter.

Nuclear cleanup sites must be at the top of the priority list. There are still nuclear sites in the United States that need to be managed and cleaned up. The Western New York Nuclear Service Center in my district is one such site. The Department of Energy estimates that making the investments needed now in nuclear site remediation will save our nation hundreds of millions of dollars in the coming decades.

The cleanup at this site, designated the West Valley Demonstration Project, is very important to our constituents in New York State as nuclear waste cleanup is a matter of environmental health and the health and safety of our fellow citizens. I have worked with my constituents on the West Valley Citizen Task Force, the Department of Energy, state and local officials, along with my colleagues in the Congress, to raise awareness about the need for consistent funding at this facility. Given the public safety issue of dealing with radioactive waste and the long-term cost savings, this bill makes good sense from both a governmental and a financial standpoint.

H.R. 2389 will provide the necessary resources over a sufficient number of years to continue the cleanup work required by the demonstration project act. At its core, the Western New York Nuclear Service Center was an Atomic Energy Commission project, and because New York State was encouraged by the AEC to develop it, the federal government should provide a disposal path for all waste on the site. Records show that the majority of waste at the site was the result of reprocessing federally-owned nuclear fuel, most of it from the federal government's Hanford facility in Washington state. The result of that reprocessing then went back to the federal government, in some part for weapons research or weapons use.

In summary, this bill will:

- Authorize sufficient funding to continue the cleanup work and reduce overall lifecycle costs, and
- Treat all radioactive waste at the site as resulting from atomic energy defense activities.

I appreciate your commitment to this important issue and encourage you and your staffs to continue working with our office as we solve this important issue. Thank you very much for your time this morning.

Mr. SHIMKUS. The gentleman yields back his time.

The gentleman from Texas, do you seek recognition?

Mr. FLORES. No, I was just going to ask him a hard question, but I know he couldn't answer it so——

Mr. SHIMKUS. The gentleman yields back his time.

So thank you, Tom, for being here. Obviously, you have got a good ally and friend who is the ranking member of the subcommittee. We have worked well on a lot of issues together, so this will be something new for many of us, and we look forward to finding out more about it.

With that, you are dismissed.

Mr. REED. Thank you very much. Have a good day.

Mr. SHIMKUS. And we will sit the second panel down.

So welcome.

Joining us now is Mr. Mark Gilbertson, Associate Principal Deputy Assistant Secretary, that is a mouthful, for Regulatory and Policy Affairs, the Office of Environmental Management, Department of Energy.

Sir, you are recognized for 5 minutes, and welcome.

STATEMENT OF MARK GILBERTSON, ASSOCIATE PRINCIPAL DEPUTY ASSISTANT SECRETARY FOR REGULATORY AND POLICY AFFAIRS, OFFICE OF ENVIRONMENTAL MANAGEMENT, DEPARTMENT OF ENERGY

Mr. GILBERTSON. Thank you.

Good morning, Chairman Shimkus, Ranking Member Tonko, and members of the subcommittee. I also would like to recognize Representative Reed's interest on behalf of his district and the support for the West Valley site. Thank you for the opportunity to appear before you today to represent the Department of Energy's Office of Environmental Management. I will provide you with an overview of the impacts of the bill, H.R. 2389, which proposes to amend the West Valley Demonstration Act.

Regarding the bill, the Department has several concerns. Section 1(b) of the bill appears to be inconsistent with section 5(b) of the West Valley Demonstration Project Act, as it could be construed to have the effect of assigning the Department the responsibility and financial liability for all radioactive waste at West Valley resulting from atomic energy defense activities.

Further, section 1(b) would not be consistent with the Department's financial responsibilities that are clearly defined in existing laws, agreements, and settlements, as well as the Department's historical position on responsibilities and liabilities for the vitrified commercial high-level radioactive waste.

For example, the consent decree entered into by the State of New York and the Federal Government provides that the Federal Government is only responsible for 50 percent of the cost, depending on the activity, for the Nuclear Regulatory Commission licensed disposal area.

The Federal Government and the State of New York have reached similar allocation agreements regarding other cleanup activities at West Valley. The proposed bill contradicts, without expressly eliminating, these legally binding agreements. This could also set a precedent for the Department's liability for disposal costs

for other commercial waste that would be designated as defense waste.

The Department's historical position has been and remains that the high-level radioactive waste was generated as a result of commercial activities. And the explicit mission of the AEC, Atomic Energy Commission, was to foster a private nuclear industry, including a private reprocessing capability. The Atomic Energy Commission made its reprocessing technology available to private industry and also provided spent nuclear fuel for reprocessing operations in order to incentivize private investment and reprocessing business operations.

While 60 percent of the spent nuclear fuel reprocessed at West Valley did come from the end reactor at Hanford, this reactor generated both electricity and plutonium for the nuclear weapons program. This arrangement was agreed to in a deliberative manner to honor the Federal Government's commitment to provide spent nuclear fuel to support West Valley's commercial reprocessing operations.

The contract to provide spent fuel from the Department for reprocessing at West Valley was entered into for this purpose, not as a means to manage or dispose of defense spent nuclear fuel. The West Valley Demonstration Project Act of 1980 explicitly assigns title to the West Valley vitrified commercial high-levelradioactive waste with the State, and deferred the question of its ultimate disposition to generic legislation then under consideration.

The Nuclear Waste Policy Act of 1982, passed just 2 years later, did not alter the West Valley Demonstration Act provisions. The disposition of the West Valley vitrified commercial high-level radioactive waste was the responsibility of New York State and not the Department.

Thank you for providing me with the opportunity to represent the Department's views on H.R. 2389. The Department's Office of Environmental Management is committed to achieving its mission and will continue to apply innovative environmental cleanup strategies to complete its work at West Valley in a safe, efficient, and cost effective manner, to serve as a strong steward of taxpayer resources.

I am pleased to answer any questions you may have.

[The prepared statement of Mr. Gilbertson follows:]

Written Statement of Mark Gilbertson
Associate Principal Deputy Assistant Secretary for Regulatory and Policy Affairs
Office of Environmental Management
U.S. Department of Energy
Before the Committee on Energy and Commerce
Subcommittee on Environment
U.S. House of Representatives
May 18, 2018

Thank you for the opportunity to appear before you today to represent the Department of Energy's (DOE) Office of Environmental Management (EM). I would like to provide you with an overview of the West Valley Demonstration Project, current cleanup status, and the impacts of the bill, H.R. 2389, which proposes to amend the West Valley Demonstration Project Act (WVDPA).

Overview

In or around 1961, New York State created the approximately 3,300-acre Western New York Nuclear Service Center (WNYNSC) in the Town of Ashford to store nuclear fuels and radioactive wastes and to be available for related industrial development. In or around 1963, a private corporation, Nuclear Fuels Services, Inc., was authorized to construct on the WNYNSC a spent nuclear fuel reprocessing facility. From 1966 to 1972, the WNYNSC was operated by this private corporation and was the first, and only, site in the nation that commercially reprocessed spent nuclear fuel. The WNYNSC is owned by the New York State Energy Research and Development Authority (NYSERDA).

In 1980, Congress passed the West Valley Demonstration Project Act (WVDPA), which directed DOE to carry out a high-level radioactive waste management demonstration project at the WNYNSC for the purpose of demonstrating solidification techniques that can be used for preparing high-level radioactive waste for disposal. The WVDPA requires DOE to:

1. Solidify, in a form suitable for transportation and disposal, the high-level radioactive waste at the WNYNSC;
2. Develop containers suitable for the disposal of high-level radioactive waste;
3. As soon as feasible, transport the solidified high-level waste to a Federal repository for disposal;
4. Dispose of low-level radioactive waste and transuranic waste produced by the solidification of the high-level radioactive waste; and
5. Decontaminate and decommission the tanks and other facilities used at the WNYNSC in which the high-level radioactive waste solidified, the facilities used in the waste's solidification, and any material and hardware used in connection with the West Valley Demonstration Project.

The WVDPA prohibits DOE from taking title to the high-level waste, the WNYNSC, or any portion of the WNYNSC. Since DOE cannot own any real property or facilities at the WNYNSC, the WVDPA required DOE to enter into a Cooperative Agreement with New

York State to gain access to the requisite facilities and the high-level radioactive waste.

The DOE and NYSERDA Cooperative Agreement, effective October 1980, affords DOE access and control of approximately 150-acres within the WNYNSC, which is commonly referred to as the West Valley Demonstration Project or WVDP, to fulfill the requirements set forth in the WVDPA.

DOE has achieved significant progress in its cleanup efforts at the WVDP with the treatment and removal of over 600,000 gallons of radioactive waste from underground tanks, including vitrification of the high-level waste (HLW). That success enabled the progression of cleanup efforts with the start of demolition of the site's Vitrification Facility. Demolition work began in September 2017, marking the first facility of its kind to be demolished in the U.S. and the first major radiological structure to be demolished at the WVDP. The start of demolition was preceded by years of planning and preparation, including removal and offsite disposal of major components from the HLW Vitrification Cell, which operated from 1996 to 2002. During its operation, the facility safely converted more than 600,000 gallons of liquid waste into vitrified glass, safely encapsulating 25 million curies of radioactivity into a stable waste form. The resulting canisters of vitrified waste from the former spent fuel reprocessing plant have been removed from the Main Plant Process Building and placed in storage.

Inventory of Waste at WNYNSC

1. The buried wastes within the State-Licensed Disposal Area (SDA), a disposal facility for commercial wastes (mostly Greater-Than-Class-C LLW) that is owned and operated by the State of New York.

Waste that remains at WVDP includes:

1. Vitrified high-level waste stored in 278 canisters on the on-site storage pad.
2. Low-level radioactive waste (LLW), mixed low-level waste, and transuranic waste resulting from continuing cleanup of the site.
3. Wastes that have already been buried in the Nuclear Regulatory Commission (NRC) - Licensed Disposal Area (NDA). Most of the wastes in this disposal area were produced by commercial activities and are Greater-Than-Class-C (GTCC) LLW. GTCC LLW is generated by NRC or Agreement State licensees and has radionuclide concentrations exceeding the limits for disposal as Class C LLW under the NRC regulations in 10 CFR 61.55. An Agreement State is a state that has signed an agreement with the NRC to regulate certain uses of certain radioactive materials within the state. A small quantity, 31 cubic meters, of waste in the NDA is waste owned or generated by DOE with characteristics similar to GTCC LLW. (This waste is described as "GTCC-like waste" in the Environmental Impact Statement for Disposal of GTCC LLW and GTCC-like waste.)

Potential Impacts of H.R. 2389

The Department has several concerns regarding H.R. 2389.

Section 1(b) seems inconsistent with Section 5(b) of the WVDPA; it could be construed to have the effect of assigning DOE responsibility and financial liability for "all radioactive waste at the high level radioactive waste management demonstration project," at the WNYNSC, by considering all such waste as resulting from atomic energy defense activities. "All radioactive waste" is not defined and could be construed to include all the radioactive waste described in the above inventory. Assigning DOE ownership and financial liability for "all radioactive waste" would also not be consistent with the WVDPA. The WVDPA does not include references to the NDA or the SDA. The WVDPA's legislative history contemplated DOE performing certain authorized activities while not taking ownership of waste or facilities. Further, section 1(b) would not be consistent with DOE financial responsibilities clearly defined in existing laws, agreements and settlements, as well as the Federal government's historical position on responsibilities and liabilities for the vitrified commercial HLW, the NDA, and the SDA at the WNYNSC. For example, the Consent Decree entered into by the State of New York and DOE in the case of *New York v. United States*, No. 06-CV-810 (W.D.N.Y. 2010), provides that the Federal government is only responsible for a portion of the cost, depending upon the activity, for the NDA. The Federal and State governments have reached similar allocation agreements regarding other facilities at West Valley. The proposed bill contradicts without expressly vitiating these legally-binding agreements. Also, this could set a precedent for the Federal Government's liability for disposal costs for certain commercial waste that would be designated as defense waste, which has heretofore been the responsibility of a commercial waste generator.

Further, the Federal government's historical position has been, and remains, that the HLW was generated as a result of commercial activities. Beginning with the Atoms for Peace program, an explicit mission of the Atomic Energy Commission (AEC), the predecessor agency to DOE, was to foster a private nuclear industry, including a private reprocessing capacity. The AEC made its reprocessing technology available to private industry and also provided spent nuclear fuel (SNF) for reprocessing operations in order to incentivize private investment in reprocessing business operations. The contract to provide DOE SNF for reprocessing at West Valley was entered into for this purpose, not as a means to manage or dispose of defense SNF.

The Department's position is that the WVDPA and the Nuclear Waste Policy Act of 1982 clearly assign responsibility to New York State to pay for disposal of the vitrified waste at West Valley. That is, the WVDPA explicitly left title to the West Valley vitrified waste with the State and deferred the question of its ultimate disposition to generic legislation then under consideration. The NWPA, passed just two years later, did not alter the WVDPA provision that disposition of the West Valley vitrified waste was the responsibility of New York State and not DOE.

Over the years, the State has advocated that the waste at West Valley should be deemed "defense waste" because the waste was at least "in part" derived from defense nuclear materials production or management; some of the SNF that was reprocessed at West Valley came from the

N-Reactor at Hanford. The Department does not agree with those propositions. While 60 percent of the SNF reprocessed at West Valley did come from the N-Reactor at Hanford, a "dual-use" reactor that generated both electricity and plutonium for the weapons program, this arrangement was agreed to in a deliberative manner to honor the Federal government's commitment to provide a base-load of SNF to support West Valley's commercial reprocessing operations.

In addition, Section 1(a) of the bill authorizes West Valley appropriations of $75 million for each of the fiscal years beginning with 2017 through 2026. This authorization level exceeds funding proposed in the fiscal year 2019 Budget Request for West Valley.

Conclusion

Mr. Chairman and Ranking Member Tonko, thank you for providing me the opportunity to present the Department's views on H.R. 2389. EM is committed to achieving its mission and will continue to apply innovative environmental cleanup strategies to complete its work at West Valley safely, on schedule and within budget. I am pleased to answer any questions you may have.

Mr. SHIMKUS. Thank you, sir.

And now we will go to a round of questions, and I will start by recognizing myself for 5 minutes.

When Congress directed the Department to partner with the State of New York to remediate this site, Congress explicitly prohibited DOE from acquiring title to any high-level radioactive waste at the site. This leaves the waste in the hands of the State of New York. As we will hear from the next witness, Congress recognized that the Federal Government had a role in cleaning up the site, and Congress has met this commitment by appropriating over $1.4 billion just over the last 20 years for this purpose. H.R. 2389 would reclassify the waste as a result from atomic energy defense activities, thereby affecting previously established disposal responsibility.

According to New York, there is a balance of nearly $30 million set aside to pay for disposal costs in a trust fund from a legacy account in 2016. But in 1986, the DOE, Department of Energy IG, said that the State would owe $68 million to the Nuclear Waste Fund.

Has DOE reassessed how much would be due to the waste fund based on that outdated estimate?

Mr. GILBERTSON. Thank you for that question. We have not reassessed that amount recently in recent times, and I would like to take that question for the record.

Mr. SHIMKUS. Thank you. Has DOE conducted any preliminary cost analysis to determine how much it would cost to dispose of West Valley waste, either at a commercial facility for the Greater-than-Class C or at another disposal facility?

Mr. GILBERTSON. Thank you for that question. At the present time, the Department has not analyzed that particular cost because the repository is not available to take the waste.

Mr. SHIMKUS. Would you agree that having that information would be helpful to move the conversation forward?

Mr. GILBERTSON. Could you please repeat that, sir?

Mr. SHIMKUS. We are asking these questions obviously to put in the record but also try to figure out how we move forward. Do you think that our ability to have that information will help us deliberate and decide to move forward in one way or another?

Mr. GILBERTSON. I believe it would help you.

Mr. SHIMKUS. OK. That's all the questions I have.

The Chair now recognizes the ranking member of the sub, Mr. Tonko, for 5 minutes.

Mr. TONKO. Thank you, Chair Shimkus.

Mr. Gilbertson, thank you for being here and for the work done by the Office of Environmental Management. I hope today's discussion can help us better understand some of the disagreements around the West Valley site.

In October of 2016, members of New York's delegation, including Mr. Reed, who we just heard from, and myself, wrote to DOE regarding West Valley. And we asked for calculations, including the method of such calculations of the Nuclear Waste Policy Act disposal fee for the State of New York and how much it would have to pay if such a fee were to be assessed both today and in 2048.

Now, in response to the chair, you just indicated that you will work on that information and get it to the subcommittee, and I hope it does include the methodology along with the number. I think that would be useful information. And so, thank you for agreeing to provide that to the committee.

In DOE's response to that October 2016 letter, DOE stated, and I quote, "There may be considerable merit in disposing of the West Valley high-level waste and defense high-level waste in the same repository." And we do believe such a conversation is timely and would welcome a dialogue with the State of New York and other interested parties with respect to the potential disposal of the West Valley high-level waste.

I understand from the State that other than one initial meeting, and I believe that was in March of 2017, DOE has not responded to requests to engage in any such discussion. Can you or will you commit to following up with the State of New York on this matter and to provide whatever information you can in response to the State's request?

Mr. GILBERTSON. Thank you for that question. We have an ongoing dialogue with the State where we are exploring through the Phase II planning process, which I am sure you are aware of, the ultimate disposition of a lot of the materials on the site. So it has been a conversation and I agree that it will be a conversation going into the future. So, yes, we will talk with the State, continue to talk with the State about that.

Mr. TONKO. All right. And NYSERDA's review of documents from the West Valley site shows that 60 percent of the materials sent to West Valley was from facilities where defense activities were underway and that 80 percent of the reprocessed plutonium shipped out of West Valley was sent to Federal defense facilities. Also, that the character of the materials was suitable for bomb making, not civilian uses.

So do you have any reason to question these facts? And would you agree that if they are true, then the West Valley waste was generated at least in part related to defense activities?

Mr. GILBERTSON. Thank you for that question. Those facts are facts that have been known for a long period of time. They have been known since when the original act was put into place. It is the Department's position, based on that set of facts, that the materials that we provided were for commercial purposes and not defense. So I think that we stipulate that the facts are the correct facts. We have a different interpretation of what that material is.

Mr. TONKO. I would hope that these would be the cornerstone of the discussion between the State of New York and the Department.

In your testimony, you noted that DOE does not own the West Valley site. As I understand it, this bill does not implicate ownership. And the question whether the waste is related to defense activities does not need to be directly linked to who technically owns it.

Apart from the ownership question, is there any evidence that has caused DOE to believe that the majority of this waste is not related at least in part to defense activities?

Mr. GILBERTSON. So we go back to the origins of the intent of why the material was provided to West Valley. The material was

provided to West Valley for commercial purposes, which is why we have the split with regard to costs we are doing the work at the sites that we do. So we believe that this is the long-standing position that we have, it is commercial material.

Mr. TONKO. But you say that, but the products sent back were all usable or characterized as defense related, the reprocessed materials. So how can you suggest that there is not a defense-related component to that?

Mr. GILBERTSON. So the materials that were taken back, you are right, the percentages of materials have been known for a long time where they went, it was part of a commercial process. So we believe that the material was provided originally to a commercial kind of process, would allow it to be sold back as a commercial entity, and so——

Mr. TONKO. But if it is sold to a private entity doesn't mean it is ranked commercialized; it was being used for defense-related purposes. Isn't that at the crux of this question here? Isn't that the big debate? And doesn't it suggest or indicate strongly that it is defense related?

Mr. GILBERTSON. So I believe this set of facts and information was known when the act was put in place originally when we entered into negotiations with the State of New York. We have moved forward with the cleanup with regard to the division of responsibilities and have—it is our position that it was provided for commercial purposes in that we have divvied up the responsibilities for costs with regard to moving forward with the cleanup at the site.

Mr. TONKO. Well, I am out of time, but I do have to indicate that acts are always revisited and that there is always amending that can be done. And I think as more information is presented, we need to have the facts guide us.

And, with that, I yield back.

Mr. SHIMKUS. The gentleman yields back his time.

The chair would now recognize the gentleman from South Carolina, Mr. Duncan, for 5 minutes.

Mr. DUNCAN. Thank you, Mr. Chairman.

And, Mr. Gilbertson, thanks for being here today. For States that have a Department of Energy cleanup site, the disposal of radioactive waste is a top priority. I know this because we have one in South Carolina, the Savannah River Site. It is right outside my district, but I am very engaged with the site.

SRS serves as a DOE site responsible for cleanup, waste management, and disposition of nuclear materials. Sixty percent of the missions at SRS are environmental management missions. This includes the disposition of solid, liquid, and transuranic waste. One of the largest check DOE EM projects of liquid waste is the liquid waste cleanup at SRS. The South Carolina Department of Health and Environmental Control describes its mission as the single greatest environmental risk at South Carolina.

I have been to the tank farms. I have seen the vitrification facilities. I have been to Hanford. I have seen the closure process out there with EM. The defense waste processing facility at SRS vitrifies high-level waste, has been doing so for over 20 years, and remains the only site in the country able to do so. I guess Hanford has got a defense waste vitrification plant underway, I don't know

the status of that. When I was there in 2008 092009, they were working on it.

There is over 34 million gallons of radioactive byproduct held in 45 waste tanks at Savannah River Site. So from your perspective at DOE's Office of Environmental Management, what do you believe the Department's cleanup priorities are for the Savannah River Site?

Mr. GILBERTSON. So for the Savannah River Site, we do believe that cleanup of the tank waste is the highest priority for the Department to complete there. And we are moving forward with the Salt Waste Processing Facility to bring that onboard so we can clean up the tanks at an even faster pace down there at Savannah River.

Mr. DUNCAN. Is the priority to single line the thinner metal tanks first?

Mr. GILBERTSON. Right. The priority are the higher risk tanks first, to disposition the materials in those tanks first. Yes.

Mr. DUNCAN. So more than half of DOE's environmental budget at SRS is spent on this tank waste, and some tank waste meets the WIPP acceptance criteria, but it cannot be sent there because it is considered high-level waste due to how that waste was created, right? So WIPP is currently limited to only being able to accept defense-related transuranic waste. This is the issue with West Valley that we have been discussing earlier. And can you talk a little bit about how the lack of clarity of what is considered high-level waste affects disposal efforts at Savannah River Site?

Mr. GILBERTSON. So we believe that under the 435 order, that we have the ability to disposition various materials. And there has been legislation that was put in place to affect your site. The 3116 legislation that allowed us to dispose of tank waste materials not as high-level waste. So there are provisions with the regulations. We are constantly looking at ways to improve the process to make it more clear as to what waste can be dispositioned in the proper technical manner at sites.

Mr. DUNCAN. Do you see in the future the ability to take this vitrified high-level waste from sites like Savannah River Site, and if Yucca is not online, to a place like WIPP?

Mr. GILBERTSON. So at the present time, we are not able to take——

Mr. DUNCAN. Because of the classification?

Mr. GILBERTSON [continuing]. Take tank waste to the WIPP facility to dispose of it. There is a provision in the current permit that doesn't allow us to take tank waste. We have a permit modification that we put in to the State of New Mexico to potentially allow for them to take tank waste.

The issue is, is currently, as defined, the high-level waste, without some clarifications, tank waste can't go to the WIPP facility. The issues of it, there is a potential for some of the material that is tank waste, though, to be within the characteristics, technical characteristics of what can be disposed of from a performance assessment perspective at WIPP.

Mr. DUNCAN. So I am about out of time. Let me make this statement.

You can't take the waste from the tank farms and the EM efforts at Savannah River Site, even though it is similar to the waste from other places, because of how it is created, and its classification is highly radioactive waste—defense waste—because it was created for defense purposes.

I can tell you, if it doesn't go to WIPP, it needs to go to Yucca Mountain. And If Yucca Mountain doesn't come onsite, we are going to have to do something, because the concrete slab that these vitrified, stainless steel tanks are sitting in, under a metal building at Savannah River Site, is not a long-term repository for this waste.

It is time for this nation to follow the law, which is Yucca Mountain. Open Yucca Mountain up and let's get this waste out of South Carolina and out of Hanford and out of Idaho and out of Oak Ridge, and all the other places where it is stored, and put it in a long-term repository known as Yucca Mountain, because it was studied and it is the law of the land and it is time for us to do that.

With that, Mr. Chairman, I yield back.

Mr. SHIMKUS. The chair appreciates your passion, and we are glad you are on the committee.

So the chair now recognizes the gentleman from Mr. Flores, for 5 minutes.

Mr. FLORES. It is OK. We have been there since 1725, so it will work out.

Mr. Gilbertson, one quick question. What would happen if the Cheney disposal site is closed?

Mr. GILBERTSON. Please repeat that, sir.

Mr. FLORES. What would happen if the Cheney Disposal Cell is closed?

Mr. GILBERTSON. If the chain?

Mr. FLORES. Cheney. The one in Colorado.

Mr. GILBERTSON. So I am not familiar with that disposal cell, and so I will take that question for the record.

Mr. FLORES. It is the only location in the country that can take uranium mining tailings. So we will submit the question for the record and ask you to respond supplementally.

That is it. I yield back.

Mr. SHIMKUS. The gentleman yields back.

At this time, seeing no other members wishing to ask questions, we would like to thank you for being here and thank you for answering our questions. Obviously, some of my colleagues are going to pose some questions, including myself, for you. We would hope you get those back to us in a timely manner, and you are dismissed. Thank you for being here.

Mr. SHIMKUS. So for our last panel, we have Mr. Noah Shaw, general counsel and secretary, New York State Energy Research and Development Authority. Sir, thank you for being here. I have learned a lot this morning, and I look forward to learning more.

With that, you are recognized for 5 minutes. Your full statement has already been submitted for the record.

STATEMENT OF NOAH SHAW, GENERAL COUNSEL AND SECRETARY, NEW YORK STATE ENERGY RESEARCH AND DEVELOPMENT AUTHORITY

Mr. SHAW. Good morning, Mr. Shimkus, Ranking Member Tonko, and members of the committee. My name is Noah Shaw. I am the general counsel of the New York State Energy Research and Development Authority, or NYSERDA. It is my honor to be here today, not only to support the long-term reauthorization of funding for the cleanup of the Western New York Nuclear Service Center, known as the West Valley site, but also to present you with facts regarding the defense origin of West Valley's nuclear waste.

Before I begin, let me just say that I appreciate Congressman Tonko's opening statement, which tees up my testimony in which I will expand on the discussion of the defense origins of West Valley's nuclear waste.

Activities at the West Valley site began in the early 1960s when the Department of Energy's predecessor, the U.S. Atomic Energy Commission, or AEC, provided a so-called baseload of spent nuclear fuel from defense-related sources. The intent was that such an arrangement would only be necessary until additional civilian nuclear plants could be constructed. But, ultimately, during the facility's operation from 1966 to 1972, 60 percent of the fuel reprocess came from defense-related activities. About 80 percent of the plutonium and 99.8 percent of the uranium shipped out of West Valley went back to defense complex sites.

In 1972, nuclear fuel services, which operated the facility, shut it down for upgrades and then never reopened it. NFS withdrew from the reprocessing business and turned West Valley, which was by then highly contaminated, over to New York State, which owned the property.

In 1980, Congress passed the West Valley Demonstration Project Act, pursuant to which the Department of Energy has taken possession of more than 150 acres where the reprocessing activities took place and the Federal Government agreed to pay 90 percent of the cleanup costs. Two years later, in 1982, Congress passed the Nuclear Waste Policy Act, which recognized the Federal Government's responsibility for permanent disposal of high-level radioactive waste from the country's atomic energy defense activities.

Historically, the Federal Government has recognized that West Valley waste was from defense sources. The Congressional Record supporting the 1980 West Valley Demonstration Project Act includes many references to how and why the West Valley site's cleanup is appropriately a Federal responsibility, given the site's role in the country's defense complex. And even the Department of Labor's employee compensation program for work-related illnesses at DOE complex sites, which was set up less than 20 years ago, designates West Valley as an "atomic weapons employer."

However, in 1986, the Department of Energy Inspector General, without explanation, designated West Valley as a "commercial site," in a report regarding the growing potential costs of the NWPA. This designation has been repeated by DOE ever since without any stated factual or legal support.

West Valley is truly unique, as both the chair and ranking member have stated today. It is the only site managed by the Office of

Environmental Management with onsite waste that DOE calls commercial or where DOE asserts that the State is responsible for a disposal fee. West Valley also houses the only transuranic waste in the Nation, waste that was generated by DOE as part of its cleanup project that is prohibited from disposal at the Waste Isolation Pileup Plant, WIPP, in New Mexico.

DOE's designation of the West Valley waste as commercial not only creates a roadblock to completing the cleanup of the site, but it also means that scarce EM cleanup funds have to be expended for potentially perpetual storage of the TRU at West Valley.

On January 13, 2017, DOE wrote to Congressman Higgins, after discussions between the Department and the New York delegation, to say that DOE had determined that it would consider whether West Valley waste could or should be disposed of with the remainder of the country's similarly packaged waste. But despite its repeated attempts to discuss this matter with the Department since then, DOE staff has failed to engage.

This is just the latest in a long history of DOE's apparent resistance to addressing this matter. Repeatedly stating its "historical position" that it doesn't own the waste and, therefore, isn't responsible for its disposition, even though ownership, per se, is not a relevant question with respect to whether the waste is defense related or not. To say the issue is lingering may be an understatement, at least as far as New York and the surrounding communities are concerned.

The State is left to conclude that legislation is the only path forward regarding how the West Valley waste will be disposed, just as, in 1980, Congress had to intervene regarding the responsibility for the site's cleanup.

A statutory designation of the West Valley waste as defense waste would finally allow it to be treated similarly to the other high-level and transuranic waste associated with our country's atomic defense activities. This is the equitable outcome for these wastes for the site, and for the communities who have now hosted the site for generations.

We also wish to emphasize the importance of funding authorization. Funding for the West Valley cleanup has been at an all time low in recent years. Appropriate funding levels allow for work to continue as contemplated by the Act, by the West Valley Demonstration Project Act. And in the absence of appropriate funding levels, work is delayed, adding to total project cost and timeframe.

Thank you for your attention, and I am happy to answer any questions you may have.

[The prepared statement of Mr. Shaw follows:]

Full Testimony of Noah C. Shaw
General Counsel
New York State Energy Research and Development Authority

Hearing of the House Energy and Commerce Subcommittee on Environment
May 18, 2018

DEFENSE ORIGIN OF THE NUCLEAR MATERIALS PROCESSED AND THE WASTES GENERATED AT THE WEST VALLEY NEW YORK SPENT NUCLEAR FUEL REPROCESSING FACILITY

I. Introduction

Chairman Shimkus, Ranking Member Tonko and members of the Committee, I'm Noah Shaw, General Counsel and Secretary of the New York State Energy Research and Development Authority, or NYSERDA. As NYSERDA's General Counsel, I have not only legal but also operational oversight of NYSERDA's work at the West Valley Nuclear Service Center in southwestern New York, also known as the West Valley site. It is my honor to be here today to present you with NYSERDA's analysis regarding the defense origin of nuclear waste present at the site and its view regarding the importance of H.R. 2389, which will reauthorize long-term federal appropriations for the ongoing clean-up of the site.

NYSERDA holds title to the Western New York Nuclear Service Center ("West Valley") site on behalf of the People of the State of New York. The State has owned the property since 1961 and, in 1966 operation commenced of the only non-federally owned spent nuclear fuel reprocessing facility in the United States. That operation ended in 1972. In 1980, Congress passed the West Valley Demonstration Project Act[1], WVDPA, pursuant to which the U.S. Department of Energy (DOE) is responsible for 90 percent of the costs of the majority of site

[1] Public Law 96-369 (1980).

clean-up. That clean-up operation – in coordination with NYSERDA – has been ongoing since then.

It is NYSERDA's position that the high-level radioactive waste (HLW) and transuranic waste (TRU) left at the site as a result of the reprocessing operation are "from atomic energy defense activities" as defined in the Nuclear Waste Policy Act (NWPA) – *i.e.,* they are "defense waste" – and are therefore eligible for disposal in the same manner, and in the same facilities, as other U.S. Department of Energy (DOE) defense HLW and TRU. The DOE disagrees, however, and has designated West Valley as a "commercial" site. But the facts and law support the conclusion that the remaining wastes are defense-related, and recognition of that fact would be consistent with the root intent of the parties as expressed during West Valley's operations and during the passage of the WVDPA. This testimony clarifies the origin and legal status of the HLW and TRU stored at the Center by the DOE West Valley Demonstration Project (WVDP) and provides the basis for Congress to properly classify the West Valley waste as waste that resulted from "atomic energy defense activities."

Moreover, Congressional reauthorization of the important appropriation for the clean-up of the site is essential to ensuring the least-cost, most efficient process. Insufficient appropriations lead to project delays, which lead to higher ultimate costs.

II. History of West Valley Activities

A. Spent Nuclear Fuel Reprocessing at West Valley

At the end of the Second World War, the federal government was solely responsible for atomic energy activities in the United States. In keeping with the federal government's desire to establish a civilian nuclear power industry, DOE's predecessor, the U.S. Atomic Energy Commission (AEC), established a program to commercialize the reprocessing of spent nuclear

fuel (SNF). As part of that commercialization program, the AEC embarked upon an initiative to make classified reprocessing technology available to private industry and committed to provide assistance in the form of a baseload of SNF – largely from defense-related sources – until additional civilian nuclear power plants could be constructed. The AEC program also allowed the use of AEC facilities for development work and training.[2]

The AEC's commercialization program led W.R. Grace and Company to establish Nuclear Fuel Services, Inc. (NFS) to design, build, and operate an SNF reprocessing facility on New York State-owned property near the hamlet of West Valley, approximately 25 miles south of the city of Buffalo. Because the AEC determined that a private entity was an improper long-term steward for the waste,[3] and at the request of the AEC, in 1963 NFS submitted an amendment to its application for an operating license indicating that New York State retained ownership of the site[4] and agreed to provide perpetual care for the waste.

The NFS reprocessing facility at West Valley, which operated from 1966 to 1972, was the only SNF reprocessing facility in the United States operated by an entity other than the federal government. After operating for six years, NFS shut down the facility to make modifications and process improvements. At the same time, the AEC was considering significant regulatory changes that would have required the solidification of high-level reprocessing wastes within five years of generation, shipment of the solidified waste to a federal repository within 10

---

[2] U.S. DOE, Western New York Nuclear Service Center Companion Report, TID21905 (1978) at pp. 1-3. Copies of any information referenced in these comments are available from NYSERDA.

[3] Letter, Robert Lowenstein, Director, Division of Licensing and Regulation, Atomic Energy Commission, to Oliver Townsend, Chairman of the New York State Atomic Safety and Development Authority (Feb. 13, 1963).

[4] *In the Matter of Nuclear Fuel Services, Inc., and New York State Atomic Research and Development Authority,* Amendment No. 1 to the Application for Licenses of the New York State Atomic Safety and Development Authority (Apr. 9, 1963); *see also* Letter, Oliver Townsend, Chairman of the New York State Atomic Safety and Development Authority, to Robert Lowenstein, Director, Division of Licensing and Regulation, Atomic Energy Commission, In Re: Nuclear Fuel Services, Inc. et al., Application for Licenses, AEC Docket No. 50-201 (, 1963).

years, and changing the seismic design considerations for fuel cycle facilities.[5] It was unclear whether the existing, highly contaminated West Valley structures would have met these new seismic requirements.[6] Given that uncertainty, and the estimated $600M cost of potential compliance, NFS announced in 1976 that it was withdrawing from the reprocessing business and would turn the West Valley reprocessing facility over to New York State.

During congressional deliberations that followed the NFS announcement, the West Valley site was recognized as "an artifact" of a premature federal program.[7] In fact, by the time the federal government's new policy on the solidification and shipment of reprocessing wastes was fully developed in 1971, 600,000 gallons of liquid HLW had already been placed in long-term storage in West Valley's underground tanks.[8] Had the federal government established its national policy regarding reprocessing facilities and wastes prior to the design, construction and operation of the West Valley facility, the design of the plant would likely have been "altered considerably."[9]

B. The West Valley Demonstration Project

i. The West Valley Demonstration Project Act

Between 1976, when NFS announced it would withdraw from reprocessing at West Valley, and 1980, the future of West Valley wastes was unclear. During that time, there were

---

[5] *See* Rochlin, G., et al., Bulletin of the Atomic Scientists, *West Valley: Remnant of the AEC* ("Remnant of the AEC") (Jan. 1978), 22-25, citing Siting of Commercial Fuel Reprocessing Plants and Related Waste Management Facilities; Statement of Proposed Policy, 34 Fed. Reg. 8712 (June 3, 1969).
[6] New York Congressman Lundine expressed doubt that the West Valley site could comply with the new seismic regulations for storage of waste. Hearings Before the Subcommittee on the Environment and the Atmosphere of the Committee on Science and Technology, 95th Congress, First Session, June 15, 16, 1977, No. 20 at 74 ("1977 Hearing").
[7] Statement of N. Richard Werthamer, Chairman of NYSERDA, to the Environment and the Atmosphere Subcommittee of the House Committee on Science and Technology Regarding Nuclear Reactor Decommissioning, U.S. Nuclear Regulatory Commission (June 15, 1977) (1977 Hearing at 3).
[8] *Id.*
[9] *Id.* at 60 (statement of Richard Cunningham, Acting Director, Fuel Cycle and Material Safety, Nuclear Regulatory Commission).

extensive state and federal discussions regarding what to do with the West Valley site, and whose responsibility it would be. In 1978, Congress directed DOE to conduct a study of options for West Valley. The options included federal aid for the clean-up, federal operation of the clean-up, and permanent federal ownership of the site.[10] The DOE study acknowledged the pervasive federal role in the creation of the reprocessing facility and indicated that DOE was neutral between the option of federal operation of the site and federal ownership of the site.[11]

After this study was completed, Congressional hearings were held on decommissioning, decontaminating, and remediating West Valley. Congressional discussion during this time period is replete with references to the federal government's responsibility for the site and the defense character of the waste at West Valley.

For example, Dr. John M. Deutch, then-Acting Secretary for Energy Technology at DOE, described the waste at West Valley to a Congressional subcommittee as "high-level waste which contain[s] both commercial and military wastes[.]"[12] He explained that discussions had begun between DOE and NYSERDA concerning the future of West Valley, whereby "[t]he Department of Energy would be responsible for the overall management and responsibility associated with the cleanup of the site" and that "[t]he Federal Government would agree to accept responsibility for the ultimate removal of spent fuel and high-level wastes from the site when a Federal repository was available."[13] On March 19, 1980, Senator Moynihan introduced the West Valley

---

[10] The Department of Energy Act of 1978 – Civilian Applications, Public Law 95-238 (Feb. 25, 1978), section 105.
[11] U.S. DOE, Western New York Service Center Study, Final Report for Public Comment, TID 21905-1, 1978, at. 39.
[12] Department of Energy Fiscal Years 1980-81 Authorization, Hearings Before the Senate Subcommittee on Energy Research and Development of the Committee on Energy and Natural Resources, Statement of Dr. John M. Deutch, Acting Assistant Secretary for Energy Technology at the Department of Energy (96th Cong., Mar. 9 – Apr. 5, 1977) at 981.
[13] *Id.* at 982.

Demonstration Project Act (WVDPA).[14] Senator Moynihan reiterated Dr, Deutch's point in hearings of the Senate Subcommittee on Nuclear Regulations on his bill, stating that "[it] is understood [ ] that the Federal Government has taken over as a matter of policy, has agreed to assume responsibility at West Valley."[15]

Similarly, on the House side, in the House Oversight Hearing before the Subcommittee on Energy and the Environment, Committee on Interior and Insular Affairs, DOE's then-Acting Deputy Assistant Secretary for Energy Technologies, Worth Bateman, acknowledged that damaged high level fuel elements from defense activities at Hanford were sent to West Valley.[16] Congressman Lundine noted that three-quarters of material reprocessed at West Valley was defense waste under the AEC base-loading agreement.[17] NYSERDA's then-President stated the same in sworn testimony to the same Congressional subcommittee.[18]

In subsequent hearings, the House Committee on Interstate and Foreign Commerce repeatedly stated in the WVDPA deliberations that the activities at West Valley had been, in large part, defense related. In particular, the committee stated:

> The Committee recognizes that a substantial quantity of this waste was produced in the course of fulfilling contracts with the Atomic Energy Commission and that most of such contracts were related to the military program. Because of the extensive past Federal involvement, the Committee is willing to have the government pay 90 percent of the cost of the project.[19]

---

[14] Public Law 96-369 (1980).
[15] *Hearings Before the Senate Subcommittee on Nuclear Regulations of the Committee on Environment and Public Works,* 96th Cong. 240 (1979) (statement of Senator Moynihan).
[16] Oversight Hearing before the Subcommittee on Energy and the Environment, Committee on Interior and Insular Affairs, Amending The Department of Energy Authorization Bill For Fiscal Year 1980, Regarding Remedial Action At West Valley, New York (May 31, 1979) ("1979 Hearing") at 20.
[17] *Id.* at 18.
[18] *Id.* at 42.
[19] Committee on Interstate and Foreign Commerce Report on the West Valley Demonstration Project Act, No. 96-100, Part II, 96th Cong. (Sept. 15, 1980) at 14 (emphasis added).

The defense-related activities at West Valley were so significant to the consideration of the bill that the committee reiterated the point, stating:

> Most of the reprocessing activities which occurred at the site were performed under contracts with the Atomic Energy Commission, and *a majority of these were a part of the military, as opposed to the commercial, program.* Because of this, and because of the benefits which will accrue to the Federal government as a result of demonstrating solidification technologies, this Committee has provided a greater Federal contribution than would normally be provided to a typical remedial action program.[20]

Similarly, Senator Moynihan, the WVDPA's sponsor and one of its most active proponents, explained in a 1982 interview after the WVDPA was passed that the reason why "the [federal] taxpayer [is] footing most of the bill" is that "the greatest share of the waste was placed at West Valley by the Defense Department . . . ."[21]

In 1980, Congress passed the WVDPA, which directed DOE to conduct and pay 90 percent of the costs of a high-level waste solidification and decommissioning demonstration project at the Western New York Nuclear Service Center. The project would include the following tasks:

- carry out a demonstration project to solidify the high–level radioactive waste in the underground tanks;
- develop containers suitable for the disposal of the solidified high-level waste;
- transport the solidified waste to a federal repository for permanent disposal;
- dispose of low–level and transuranic waste; and,
- decontaminate and decommission the facilities used in the solidification process.[22]

---

[20] *Id.* at 15 (emphasis added). *See also* Statement of Representative Dingell, 126 CONG. REC. 25351 (1980) ("Furthermore, the past extensive Federal involvement in the development and operation of the re-processing activities at the site distinguishes this program from a typical remedial action program. Over 70 percent of the spent fuel reprocessed on the site was under contract with the Atomic Energy Commission, and most of this was for the military as opposed to the commercial programs") and 126 CONG. REC. 25353, Statement of Representative Royer ("The waste at West Valley is a result of both military activities and civilian reprocessing.").
[21] Reitz, Tom, *Success of West Valley Project Holds Key to Future of Nuclear Power*, Springville J. (Mar. 4, 1982).
[22] Public Law 96-368.

ii. The Cooperative Agreement

The WVDPA also required DOE to enter into a Cooperative Agreement with NYSERDA, which holds the West Valley site in trust for New York State.[23] The Cooperative Agreement, executed in 1980, grants DOE exclusive use and possession of the central 200 acres of the site, including most of the facilities containing radioactive materials, and restates DOE's obligation to decontaminate and decommission all facilities and premises used in conducting the project. The Cooperative Agreement also obligates NYSERDA to turn over the so-called "perpetual care fund," established in a 1963 Waste Storage Agreement between NYSERDA's predecessor, the New York State Atomic Research and Development Authority, and NFS,[24] to DOE upon delivery of the WV HLW to an appropriate federal repository for disposal.[25] NYSERDA obtained the perpetual care fund as part of a settlement between NYSERDA and NFS after NFS ceased operations, and has maintained the fund in an interest bearing account since that time. As of March 31, 2016, the fund contains $29.2 million.

iii. The West Valley Demonstration Project

Since the WVDPA was passed more than 30 years ago, DOE has made significant progress at the site. DOE completed the solidification of the high-level waste in 2002[26] (more than 98 percent of the liquid HLW was removed from the underground waste storage tanks and solidified into 19,000 drums of cemented low–level waste and 275 high-level vitrified waste in

---

[23] *Id;* the DOE-NYSERDA Cooperative Agreement is available here: http://www.wv.doe.gov/WVDP_WWW/Document_Index/DOE_NYSERDA_Cooperative_Agreement.pdf

[24] *See* Waste Storage Agreement, New York State Atomic Safety and Development Authority and Nuclear Fuels Services, Inc. (May 15, 1963).

[25] Notably, as explained in the Congressional record in years prior to the Cooperative Agreement's execution, "[t]he funding arrangement contemplated only the eventual transfer of the waste to new tanks, in perpetuity, and did not consider facility decommissioning during the early part of the license term." 1977 Hearing at 60 (Remarks of Richard Cunningham, Acting Director, Fuel Cycle and Material Safety, U.S. Nuclear Regulatory Commission).

[26] http://www.nyserda.ny.gov/Cleantech-and-Innovation/West-Valley/West-Valley-Demonstration-Project

steel canisters[27]); the 19,000 drums of cemented low-level waste were successfully shipped to the Nevada Test Site for disposal; and the high-level vitrified waste, which are contained in stainless-steel containers, are stored in shielded casks at an interim HLW storage facility constructed by DOE at the site.

DOE is presently conducting "Phase 1" decommissioning activities at West Valley, including demolition of the Vitrification Facility, waste processing and shipping, and the removal of contaminated systems, equipment, and asbestos from the massive, highly contaminated Main Plant Process Building in preparation for demolition.[28] DOE has stated that the HLW canisters will be stored at West Valley until a HLW repository is available to accept the canisters for permanent disposal, which could be decades away. And the D.C. Circuit recognized in a 2012 decision that the federal government's potential failure to secure a repository is a "possibility that cannot be ignored."[29]

III. The Nuclear Waste Policy Act

Two years after Congress passed the WVDPA and DOE executed the Cooperative Agreement with NYSERDA, and before the work of the WVDP had even begun, Congress passed the Nuclear Waste Policy Act (NWPA) in response to the accumulation of SNF at commercial reactors. The NWPA, as amended, provides, *inter alia*, a framework for the development of HLW repositories and establishes a program of research, development, and demonstration regarding the disposal of HLW and SNF. As part of that framework, the NWPA provides that "[t]he costs resulting from permanent disposal of high-level radioactive waste from atomic energy defense activities should be paid by the Federal Government."[30] The NWPA also

---

[27] *Id.*
[28] *Id.*
[29] *New York v. NRC*, 681 F.3d 471 (D.C. Cir. 2012).
[30] 42 U.S.C. § 10107(b)(2).

defines "atomic energy defense activity" as "any activity of the Secretary performed *in whole or in part*" in carrying out, among other things, "defense nuclear materials production, defense nuclear waste and materials by-products management, and defense research and development."[31] As discussed in Section V.A, below, the historical record shows that NFS conducted, in part, "defense nuclear materials production" at West Valley, and by virtue of conducting that activity, NFS also conducted "defense nuclear waste and materials by-products management" at West Valley -- as DOE does today. In addition, as discussed in Section V.B (below), records in NYSERDA's possession strongly suggest NFS also conducted "defense research and development" at West Valley. The historical record on the NFS operation at West Valley is extensive and demonstrates that the radioactive wastes at West Valley were generated as a result of "atomic energy defense activities."

IV. State and Federal Discussions Regarding Disposal of West Valley HLW

Despite the statements in the legislative history of the WVDPA and the facts described in Section VI below, DOE presently asserts that West Valley HLW is "commercial waste"[32] – *i.e.*, that the HLW at West Valley is *not* "from atomic energy defense activities" and therefore a fee for ultimate disposal of the waste should be borne by the State, which is the owner of the site and therefore the wastes. But DOE held a different position on the disposal fee issue prior to 1986 (1986, notably, was approximately the same time that DOE realized that the NFS perpetual care fund would not be sufficient to cover the costs of disposal).

---

[31] 42 U.S.C. § 10101(3)(emphasis added). Legislative history indicates the Congressional view that the NFS operation at West Valley was a research and development effort. *See* 1979 Hearing at 2 (Comments of Chairman Udall).

[32] U.S. Department of Energy, Assessment of Disposal Options for DOE-Managed High-Level Radioactive Waste and Spent Nuclear Fuel (Oct. 2014), at v ("Commercial waste (e.g., HLW at West Valley ...) is not eligible for a repository exclusively for DOE-managed HLW and SNF from defense or DOE research and development activities.").

In 1983, when the perpetual care fund contained approximately $6 million, Robert Morgan, DOE's Project Director of the Nuclear Waste Policy Act Project Office, stated in a letter to NYSERDA that "[t]here is every indication that the perpetual care fund that will transfer to DOE upon completion of the project ... will adequately cover the estimated disposal costs of the solidified wastes."[33] Furthermore, he recognized that DOE would manage the waste after it was delivered to a repository.[34]

In 1986, however, DOE's Inspector General (IG) issued a report on civilian contributions to the Nuclear Waste Storage Fund. In that report, the IG – without any apparent factual or legal analysis of the kinds of wastes or activities that had been undertaken at the site – listed West Valley along with other commercial sites, estimated West Valley HLW disposal costs to be $68.7 million and stated that DOE and the State of New York were required to enter into a fee contract for the costs of disposal.[35] This was the first time that DOE had indicated that the State would have to pay disposal fees in addition to what was held in the perpetual care fund, and, moreover, it was the first time DOE had designated the HLW at West Valley as non-defense waste under the NWPA. The IG's report acknowledged that the Cooperative Agreement required the State to turn over the perpetual care fund to DOE in 1997, and that DOE had assumed this fund with interest would adequately cover the estimated disposal costs of the solidified wastes, but nevertheless stated that an agreement – which would later be termed the "Standard Contract" – regarding additional fees was required.[36] DOE's 1986 change in position, contemporaneous

---

[33] Letter, Robert L. Morgan, Project Director, Nuclear Waste Policy Act Project Office, U.S. Department of Energy, to William Cotter, Chairman, New York State Energy Research and Development Authority (June 27, 1983).
[34] *Id.*
[35] U.S. Department of Energy, Office of Inspector General, Report on Accuracy of Fees Paid by the Civilian Power Industry to the Nuclear Waste Fund, DOE/IG-0231 (Oct. 27, 1986) ("IG Report").
[36] IG Report at 11-12.

with its significant upward revision to the estimated disposal costs, sparked 30 years of unsuccessful discussion and negotiation between DOE and NYSERDA to resolve this issue.

More recently, in October of 2016, members of the New York delegation urged DOE's leadership to correct the misclassification of West Valley waste,[37] and in January 2017, DOE's then-acting Assistant Secretary for Nuclear Energy responded to Congressman Higgins indicating openness to discussing "the potential disposal of West Valley HLW in a defense repository" with New York State.[38] Subsequent attempts to engage with DOE officials have been unavailing.

V. Atomic Energy Defense Activities at the West Valley Site

A. DOE Records and Other Public Records Indicate Atomic Energy Defense Activity

In addition to the statements in the legislative history regarding the defense-related character of West Valley activities, records in NYSERDA's possession and that NYSERDA has inspected show that the radioactive material shipped to and from West Valley was, in significant part, defense-related.

During its six years of operation, the NFS West Valley facility reprocessed approximately 640 metric tons of SNF. NYSERDA's review of the facility's historical records shows that approximately 25 percent of the SNF reprocessed at West Valley came from civilian nuclear power plants, and 15 percent came from research facilities or other power reactors under contract to the federal government. The majority of the fuel (60 percent or 380 metric tons) came

[37] Letter, Tom Reed, Member of Congress, at al., to The Hon. Dr. Ernest J. Moniz, Secretary, United States Department of Energy (Oct. 28, 2016).
[38] Letter, Raymond Furstenau, Acting Assistant Secretary for Nuclear Energy, United States Department of Energy, to The Hon. Brian Higgins (Jan. 13, 2017).

from the N-Reactor at the federal government's Hanford facility in Washington State under the AEC baseload agreement with NFS.

The N-Reactor was a "dual-use" nuclear reactor which generated plutonium for the nation's nuclear weapons program as well as electricity for the Washington Public Power Supply System.[39] NFS records from the time show that initial shipments of N-Reactor fuel sent to West Valley for reprocessing in 1966 had very low burn-ups, indicative of fuel from the N-Reactor that was intended for plutonium-production.[40] Records also show that the first two lots of N-Reactor fuel were received at West Valley for reprocessing prior to the initiation of electrical generation operations at the N-reactor, meaning that irradiated fuel, originating from the N-Reactor at the time it was in its weapons-production-only mode, was reprocessed at West Valley.[41]

The NFS West Valley plant produced plutonium nitrate and uranyl nitrate solutions. Approximately 80 percent of the plutonium nitrate recovered by NFS at West Valley was shipped directly back to Hanford.[42] As part of a directive from the DOE Secretary in the early 1990s to declassify plutonium information, DOE reviewed information on the plutonium provided to the AEC from West Valley.[43] DOE's analysis showed that, of the 1,530 kg of

---

[39] Gerber, M., *The Plutonium Production Story At The Hanford Site: Processes And Facilities History* (June 1996) ("The Plutonium Production Story"), at 2-10 (indicating that in 1971, N-Reactor was ordered closed due to a diminished national need for defense plutonium production, making clear that defense plutonium production took place at the site in years prior).

[40] E.R. Johnson Associates Inc., *Review of the Operating History of the Nuclear Fuel Service, Inc. West Valley, New York Irradiated Fuel Processing Plant* (Dec. 26, 1980), Table 4-1 (Draft). The two, low burnup lots represent 20% of the N-Reactor reprocessing campaigns at West Valley.

[41] NFS Fuel Reception and Storage Logbook, p. 32, entries of shift staff Hartwell and Mosher, dated 3-11-1966.

[42] Plutonium & Uranium Recovery from Spent Fuel Reprocessing by Nuclear Fuel Services at West Valley, New York from 1966 to 1972, U.S. Department of Energy (Feb. 1996), *available at* http://pbadupws.nrc.gov/docs/ML1219/ML12194A610.pdf (last accessed May 2, 2016) ("Plutonium Recovery Report").

[43] *Id.*

plutonium received by the AEC from the West Valley facility, 635 kg originated from fuel or reactors that were AEC-owned and 895 kg came from commercial power-reactor fuel.[44] Of the 635 kg of AEC-origin plutonium, 534 kg of plutonium came from N-Reactor; 95 kg from the NFS facility in Erwin, TN; and 6 kg from the Bonus Reactor, an AEC-owned demonstration reactor in Puerto Rico.[45] DOE's 1996 report specifically acknowledges that not all of the recovered plutonium was used in the breeder reactor and zero power reactor programs at Hanford.[46] In addition, NFS records from the time show that the Pu-239 content of the initial shipments of plutonium nitrate to Hanford was very high (greater than 98 percent Pu-239), indicative of material that would have been used for weapons production.[47] In addition to plutonium, over 1.3 million pounds of uranium were recovered by NFS at West Valley for reuse. Approximately 99.8 percent of this uranium was shipped to the AEC's Fernald Feed Materials Production Center in Ohio.[48] This facility produced "high purity metals products for the U.S. defense program."[49] Fernald received enriched, natural and slightly depleted uranium from various sources, and processed those materials into uranium metal products for use by other sites in the nation's nuclear weapons complex.[50] At Fernald, depleted and slightly enriched uranyl

---

[44] *Id.* at 1.
[45] *Id.* at 13.
[46] *Id.* at 14 (stating that "[m]ost of the plutonium was used in the breeder reactor and zero power reactor programs.") (emphasis added).
[47] Plutonium Recovery Report at 10-12, 15; *see also* NFS shipping records in NYSERDA's possession and available upon request. For background, Pu-239 is the desirable isotope in weapons material along with a low Pu-240 content; Pu-240 is unwanted in nuclear weapons material. The more time that the fuel spends in the reactor, the more Pu-240 that is created in the spent fuel. AEC specifically "burned" fuel in the reactor for a much shorter time when they were looking to make weapons-grade plutonium. Regarding fuel entering West Valley, low burnup fuel is an indication of fuel that was "burned" for a weapons purpose; likewise, for recovered plutonium departing West Valley, a high Pu-239 content is indicative of weapons-grade material.
[48] *See* Plutonium Recovery Report at 2, indicating that 619.1 metric tons of uranium (MTU) out of 620 MTU was shipped directly to Fernald, and that the remaining 0.9 MTU of Highly Enriched Uranium was shipped to the Oak Ridge Y-12 plant.
[49] U.S. EPA Region 5 Superfund Fact Sheet, *available at* https://www3.epa.gov/region5/superfund/npl/sas_sites/ohio/OH6890008976.html (last visited May 9, 2016).
[50] See Fernald Production Processes and Products, https://www.lm.doe.gov/land/sites/oh/fernald_orig/50th/fppp.htm

nitrate solution (the form of the uranium received from NFS West Valley) was converted, through a number of chemical processes, to a uranium metal mass called a "derby."[51] Most of the Fernald derbies were melted into ingots, which were then extruded, heat treated, and machined into "target element cores."[52] The depleted uranium target element cores were shipped to the AEC's Savannah River Site, where they were bombarded with neutrons in the K-Reactor.[53] Through the neutron-capture process in the K-Reactor, the uranium-238 in the target element cores was converted into weapons-grade plutonium-239. The remaining 0.2 percent of the uranium recovered at West Valley (in the form of U-233) was shipped to the Oak Ridge Y-12 facility in Tennessee.[54]

Figure 1 below illustrates the origins and destinations of the nuclear materials processed and recovered during the NFS operation and shows the integrated nature of the NFS West Valley facility with the nation's nuclear weapons complex. Figure 2 is a detailed flow diagram showing the sequence of events whereby the 1.3 million pounds of depleted or low-enriched uranium recovered by NFS at West Valley would have been used in the weapons production process via the Fernald Feed Materials Production Center.

---

[51] *Id.*
[52] *Id.*, and NIOSH, Feed Materials Production Center – Site Description, ORAU Team Dose Reconstruction Project, ORAUT-TKBS-0017-1, Rev 1, 2014.
[53] See Figure F.5, Head of the K Reactor, found at http://nonuclear.se/deltredici.f5.k.reactr.head.html
[54] Plutonium Recovery Report at 2.

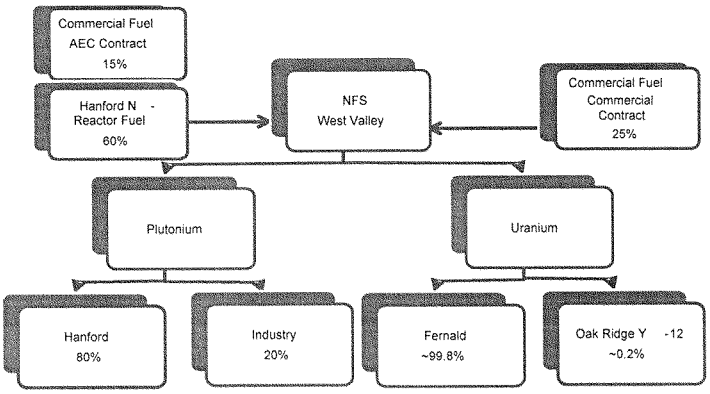

Figure 1. Origin and Destination of the Key Materials Received and Produced During Reprocessing Operations at West Valley.
Source: NYSERDA, based on review of historical NSF records

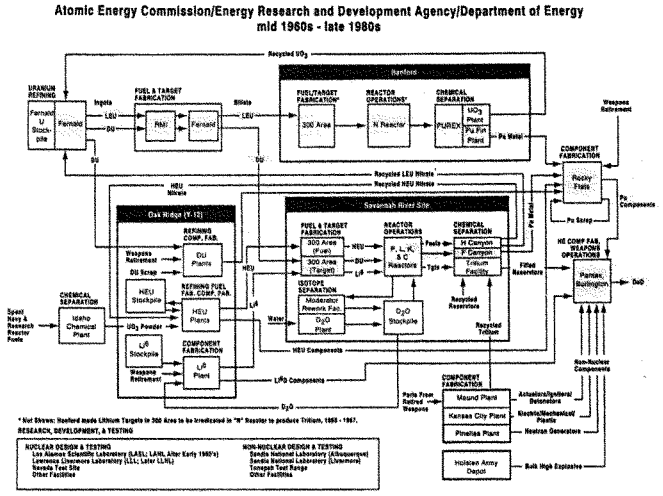

Figure 2. Process Path to Nuclear Weapons for Uranium Recovered by NFS at West Valley
Source: *Linking Legacies, Connecting the Cold War Nuclear Weapons Production Processes to their Environmental Consequences, DOE Office of Environmental Management, Jan 1997.*

B. Additional Indicia of Defense Activities at West Valley

Apart from the origin and destination of West Valley HLW, NFS records in NYSERDA's possession include references to additional defense-related work performed on the site. NFS and the West Valley facility served as a prime contractor for at least six U.S. Air Force contracts.[55]

[55] *See* National Archives, Military Prime Contract File (July 1, 1965-June 30, 1975); Records of Prime Contracts Awarded by the Military Services and Agencies (July 1, 1965-June 30, 1975), Record Group 330; *available at* Access to Archival Databases www.archives.gov (last accessed May 9, 2016). None of the six known U.S. Air Force contracts were synopsized, in accordance with Armed Services Procurement Regulation 1-1003.1 Exception 1, which states:

> Classified procurements, where the information necessary to be included in the Synopsis would disclose classified information or where the mere disclosure of the Government's interest in the area of the proposed procurement would violate security requirements, shall not be publicized in the Synopsis.[55]

These contracts, combined with other publicly available information, makes clear the defense-related nature of activities at West Valley. In particular:

(1) NFS employees were cleared through AEC channels, allowing for the dissemination of reprocessing information and information pertaining to the N-Reactor fuel elements, and another clearance path allowed NFS personnel to have access to Department of Defense (DOD) classified information at the SECRET level and below;[56]

(2) NFS was subject to regular inspections by the Defense Supply Agency (DSA), the first of which in available records was conducted on August 19, 1966 and focused on the security measures surrounding DOD classified information housed and generated within the West Valley facility;[57] and,

(3) in order to properly secure and maintain control of classified information, NFS established security protocols with the United States Post Office in West Valley, New York, which explicitly states that only three individuals were cleared to receive registered mail from either the AEC or the Air Force.[58]

This information and additional information that NYSERDA is seeking through requests for information to the Air Force and National Archives provide strong indicia that defense-related activities took place at West Valley, and it is reasonable to infer that the materials received and shipped from the facility were related to those defense activities.

From publicly available records at the National Archives it is possible to discern the potential nature of the contracts, based upon their federal supply class descriptions. Of the six contracts, three involved surveillance, two exploratory development, and the final contract provided consultant services.

[56] *See* Standard Practice Procedures Manual, Department of Defense Security Rules, Nuclear Fuel Services, Inc., 8.1-14, Rev. 3 (undated) at 3; *see also* Memorandum, R.B. Kelly, NFS Security Officer, to Employees Authorized to Use AEC Classified Documents (Sept. 25, 1970).

[57] Letter, Defense Supply Agency to NFS (Aug. 29, 1966) (summarizing DSA findings during an audit conducted on August 19, 1966).

[58] Letter, Milton A. Ausman to U.S. Post Office, West Valley, New York (Aug. 20, 1970).

C. Energy Employee's Occupational Illness Compensation Program

The federal government's Energy Employee's Occupational Illness Compensation Program (EEOICP) was established in 2001 to compensate individuals with a broad range of work-related illnesses throughout the Department of Energy's nuclear weapons complex.[59] Although DOE asserts that the West Valley waste is commercial waste, EEOICP materials identify the site during the period of 1966 through 1973 as an "atomic weapons employer, [60] and over $16 million in claims have been paid to date.[61] DOE's Office of Environment, Health, Safety, and Security webpage for the EEIOCP[62] includes the following information:

> **West Valley Demonstration Project**
>
> **Also known as**: Nuclear Fuels West Valley
> **Also known as:** Western New York Fuel Services Center
> **State:** New York
> **Location:** West Valley
> **Time Period:** Atomic Weapons Employer 1966-1973, Residual Radiation 1974-1979, DOE 1980 to present
> **Facility Type:** Atomic Weapons Employer/Department of Energy
>
> **Facility Description:** From 1966 to 1972, Nuclear Fuel Services, Inc., under contract to the State of New York, operated a commercial nuclear fuel reprocessing plant at the Western New York Nuclear Services Center. The plant reprocessed uranium and plutonium from spent nuclear fuel; sixty percent of this fuel was generated at defense facilities.

The characterization of the site as an atomic weapons employer from 1966 to 1973 by the EEOICP and DOE's Office of Environment, Health, Safety, and Security is consistent with the

[59] PUBLIC LAW 106–398—OCT. 30, 2000, NATIONAL DEFENSE AUTHORIZATION, FISCAL YEAR 2001
[60] DOE Covered Facility Database, Search term: West Valley, available at https://ehss.energy.gov; see also http://westvalleyctf.org/2008_Materials/2008-10-Materials/Energy_Employees_Occupational_Illness_Compensation_Program_Materials.pdf, at 5.
[61] https://https://www.dol.gov/owcp/energy/regs/compliance/statistics/WebPages/W_VALLEY_DEM.htm
[62]DOE Covered Facility Database, Search term: West Valley, available at https://ehss.energy.gov.

historical records that document the weapons complex activities conducted by NFS at West Valley during this time.

D. Disposal of N-Reactor Wastes

As described above, the N-Reactor at Hanford was used both for nuclear weapons plutonium production and for the generation of electricity. At Hanford, the K-Basin sludge (which consists largely of deteriorating N-Reactor fuel that was stored in the K-Basin after it was removed from the N-Reactor[63]), has been has been recovered, containerized, and is being stored prior to final repackaging for disposal at the Waste Isolation Pilot Plant (WIPP)[64]. The disposition of this material at WIPP suggests that DOE has determined that the N-Reactor sludges are defense waste, even though the N-Reactor was used for commercial power generation as well as weapons plutonium production. At West Valley, TRU wastes were also generated through defense and non-defense activities, but unlike the N-Reactor, DOE is labeling the West Valley waste as "commercial" rather than "defense" waste, effectively stranding the TRU at West Valley for the foreseeable future.

VI. DOE's GTCC EIS Does Not Provide a Viable Near-Term Disposal Path for West Valley TRU

Since the beginning of the West Valley Demonstration Project in 1982, DOE has generated approximately 34,000 cubic feet of TRU at West Valley. This waste must be stored on site, inconsistent with the requirement of the WVDPA that DOE dispose of the on-site TRU, because DOE's "commercial" designation of this waste makes it ineligible for disposal at WIPP.[65] This

[63] https://www.hanford.gov/page.cfm/K-Basins
[64] https://www.hanford.gov/page.cfm/STP
[65] The WIPP Land Withdrawal Act limits the mission of WIPP to the disposal of wastes from atomic energy defense activities.

creates a roadblock to the completion of the WVDP,[66] and means that scarce DOE Office of Environmental Management (EM) cleanup funds have to be expended for long-term TRU storage at West Valley.

In an effort to resolve the West Valley "orphan waste" TRU issue, DOE included the West Valley TRU in DOE's *Environmental Impact Statement for the Disposal of Greater-Than-Class C (GTCC) Low-Level Waste and GTCC-Like Waste* (DOE/EIS-0375)[67] (the West Valley TRU was evaluated in the GTCC EIS because DOE labeled it as "GTCC-like waste" for the purposes of the GTCC EIS[68]).

The GTCC EIS evaluated several disposal alternatives, including disposal at WIPP, disposal at other DOE sites, and disposal at generic commercial facilities. The preferred alternative identified in the EIS for the disposal of GTCC and GTCC-like waste was "land disposal at generic commercial disposal facilities and/or disposal at the WIPP geologic repository."[69]

In November 2017, DOE issued a report to Congress on GTCC disposal options and recommendations.[70,71] Unlike the approach identified in the preferred alternative in the GTCC FEIS, DOE's report to Congress eliminated the possibility of disposing the West Valley TRU at WIPP, stating that, "[because] full waste emplacement operations at WIPP are not expected until

---

[66] Section 2(a)(4) of the WVDP Act (Pub law 96-368) requires DOE to dispose of low-level waste and transuranic waste produced by the solidification of the high-level waste under the project.
[67] The GTCC Draft EIS was issued in February 2011, and the GTCC Final EIS was issued in February 2016.
[68] Environmental Impact Statement for the Disposal of Greater-Than-Class C (GTCC) Low-Level Waste and GTCC-Like Waste (DOE/EIS-0375)
[69] *Id.*
[70] The Energy Policy Act of 2005 requires that, prior to making a final decision on the disposal alternative or alternatives to be implemented regarding GTCC waste, the Secretary of Energy shall submit a report to Congress that describes the alternatives under consideration and await action by Congress.
[71] See *Alternatives for the Disposal of Greater-Than-Class C Low-Level Radioactive Waste and Greater-Than-Class C-Like Waste*, DOE Report to Congress, November 2017.

VIII. Conclusion

Reauthorization of the West Valley Demonstration project, and the appropriated annual funding included in H.R. 2389, is critical to New York. Without federal funds, West Valley is at risk for being the only DOE Environmental Management (EM) cleanup site in the nation where a state is responsible for the entire cost of disposing DOE-generated HLW. West Valley is also the only site in the nation where TRU waste, generated by DOE through an EM cleanup project, is prohibited from disposal at DOE's only operating, available TRU disposal facility because DOE has labeled the waste in a manner that is inconsistent with the NWPA. The issues discussed in this testimony, which continue to come into focus as NYSERDA gathers additional information from the extensive historical record at West Valley, make it ever-clearer that the HLW and TRU at West Valley originated from "atomic energy defense activities."

Over the last 36 years at West Valley, DOE and New York State have successfully overcome unique technical and legal challenges that could have delayed progress toward the safe and successful completion of the WVDP. Yet, DOE has offered no legal rebuttal to the clear points NYSERDA outlines above, leading NYSERDA to believe that legislation is the only path forward at West Valley. This designation will allow the TRU to enter the queue for disposal at WIPP and avoid delays in the shipment of HLW when a repository or consolidated interim storage facility becomes available.

VIII. Conclusion

Reauthorization of the West Valley Demonstration project, and the appropriated annual funding included in H.R. 2389, is critical to New York. Without federal funds, West Valley is at risk for being the only DOE Environmental Management (EM) cleanup site in the nation where a state is responsible for the entire cost of disposing DOE-generated HLW. West Valley is also the only site in the nation where TRU waste, generated by DOE through an EM cleanup project, is prohibited from disposal at DOE's only operating, available TRU disposal facility because DOE has labeled the waste in a manner that is inconsistent with the NWPA. The issues discussed in this testimony, which continue to come into focus as NYSERDA gathers additional information from the extensive historical record at West Valley, make it ever-clearer that the HLW and TRU at West Valley originated from "atomic energy defense activities."

Over the last 36 years at West Valley, DOE and New York State have successfully overcome unique technical and legal challenges that could have delayed progress toward the safe and successful completion of the WVDP. Yet, DOE has offered no legal rebuttal to the clear points NYSERDA outlines above, leading NYSERDA to believe that legislation is the only path forward at West Valley. This designation will allow the TRU to enter the queue for disposal at WIPP and avoid delays in the shipment of HLW when a repository or consolidated interim storage facility becomes available.

Mr. SHIMKUS. Thank you very much, sir.

And I will recognize myself for 5 minutes for opening questions.

Enactment of H.R. 3053 would break the current impasse on our nation's nuclear waste management program and provide a path to complete the Yucca Mountain repository, while allowing DOE to pursue temporary storage efforts in the meantime. Your testimony notes concern that a repository might not be available for decades, but with congressional support, the nuclear waste could be transported well within a decade.

Do you support reconstituting DOE's nuclear waste management program and moving forward with a repository and storage program to remove the West Valley waste?

Mr. SHAW. We support a pathway for the West Valley waste, whether that pathway is an interim solution——

Mr. SHIMKUS. OK. We need your help here, right? I have this debate and discussion with locations all around the country. If you need it moved, you have to have a place for it to go. There is current law of the land, which is a Nuclear Waste Policy Act, amended in 1987, the national government assigned a location. That location has been politically blocked for about 9 years. We are unblocking it.

It would be helpful for States to realize what the Federal law is and be helpful. A lot of the New York colleagues have been strongly supportive of the bill we just passed last week. It is kind of timely that you are here now. And so if you don't want it there, you have to have a place to go.

What we have done in H.R. 3053 is allow both options for completion, and I am going to—the follow-up question will show the timeliness of this. But we have accepted the premise that an interim is an important process in getting to a final repository.

Without a national solution, you will be an interim site forever, right? And no one wants that. Science is a long-term geological repository, and so—I am not meaning to lecture, we are just asking for your help——

Mr. SHAW. I understand.

Mr. SHIMKUS [CONTINUING]. In how we phrase this to your State and to the Nation. What is the current estimated timeframe for DOE to complete the decontamination and remediation of the West Valley facilities?

Mr. SHAW. There is, as you may know, an ongoing supplemental environmental impact statement process with respect to the future of the site right now. The range of options includes, obviously, as you might imagine, a variety of timeframes for the completion of the project. I think the last EIS suggested that we could be looking at anywhere from 10 to 35 years. I think that we will know more about the likely timeframe once the SEIS process is completed.

Mr. SHIMKUS. And I think DOE has between 2040 and 2045, which would be the worst-case scenario. Based on the estimated work remaining and the timelines associated with DOE's waste management program, it seems that the best and the most expeditious disposal path available to the State of New York is to have the Senate consider the bipartisan nuclear waste bill passed by the House just last week.

And, again, I wanted to thank my colleagues, obviously, and the ranking member who was very helpful in moving this forward.

By the time West Valley is done, worst case 2045, the repository will be open and accepting long-term geological storage. So we are glad to have you there, and I would take back to your folks in the State that a positive response on the Nation trying to solve this problem for all 50 States is moving forward, and we would hope that New York State would be fully supportive.

With that, I yield back my time, and I turn to the ranking member of the subcommittee, Mr. Tonko, for 5 minutes.

Mr. TONKO. Thank you, Mr. Chair.

And, Mr. Shaw, thank you again for your testimony and, again, thank you for your work on behalf of the residents of my home State of New York. It is helpful for the committee to have a full understanding of the history of the West Valley site.

Can you explain what the effect would be on ultimate cleanup of the West Valley site if H.R. 2389 became law?

Mr. SHAW. It would provide a pathway for both the transuranic waste and a practical pathway for the high-level waste. Right now, because of the commercial designation, the transuranic waste has no pathway, it can't go to WIPP. And because of the application by DOE of the NWPA provisions regarding the disposal fee, we are looking at a cost to the State, at the time of an ultimate repository that may very well be prohibitive. So it would open the path for actually getting the waste off the site.

Mr. SHIMKUS. You also mentioned the—Mr. Gilbertson was asked about discussions, and he said that they are routine, they are ongoing. But I am understanding from your comments that some elements of that discussion have not occurred.

Mr. SHAW. To be clear, the discussions that I believe Mr. Gilbertson was referring to are the discussions with respect to the ongoing environmental impact statement process. I commend our site staffs, they work well together on a daily basis. They work in the same building, a very close working relationship there. However, when it comes to this higher level question of the defense versus nondefense character of the waste onsite, we have attempted to engage and have not been provided much of a response.

Mr. TONKO. Thank you for that clarification.

Earlier this morning, DOE mentioned that the Department does not and cannot own the waste at West Valley. Can you explain how the Nuclear Waste Policy Act considers waste ownership, and how it is or is not relevant to today's discussion?

Mr. SHAW. My reading of the Act is that it is not relevant. The question under section—well, the statement under section 8 of the Act is that the fee provisions do not apply to "any atomic energy defense activity or to any facility used in connection with any such facility."

I believe that the facts as we have stated them, and the facts that were considered by Congress in passing the Act back in 1980, clearly establish that the activities at West Valley were defense related. The question of ownership, while it may be consistent with the way DOE thinks about other sites, really doesn't apply here, and it is a unique site with a unique history and a unique waste

profile. And, unfortunately, it doesn't fit into the boxes that DOE usually applies.

Mr. TONKO. Thank you. And compared to some other sites in the DOE complex, West Valley is relatively small, that is, it does not have nearly as much waste as places like Savannah River and Hanford. Can you explain why Congress should step in and clarify the waste designation as defense related?

Mr. SHAW. Thank you for the question. Precisely because of some of the themes that have been repeated here. It is a unique site. It doesn't fit the usual equations that DOE has used in the past with respect to deciding pathways for waste. And after 30 years of attempting to reconcile this disagreement with respect to the defense nature of the waste, we don't see another pathway forward.

We have requested the calculation of the fee, as you have related numerous times, and that has not been forthcoming. We have requested a factual or legal analysis for the designation of commercial, and that has not been forthcoming, other than to say that it was provided for "commercial purposes."

I will say, lots of private contractors have been handling defense waste around the country and made a lot of money on it for a long time. That is not the question that needs to be answered when determining whether this material is defense related or not.

Mr. TONKO. Thank you. And I understand that the next phase of the environmental impact statement process for this site recently began. There were a number of community meetings and comments have been submitted. Can you summarize the reactions you have received and how they relate to this proposed legislation?

Mr. SHAW. Thank you for the question. I think it is important to understand the full thrust of the community engagement and concern with respect to the site and how it relates to this bill. I was at the meetings. Large sectors of the community showed up from across the political spectrum to emphasize their concern about what would happen to the waste and, in particular, to say that it should be a cleanup, a full cleanup.

Obviously, that is one of the options within the SEIS process that is being considered. However, there are a number of options within the SEIS process, including the full cleanup, that won't be practically feasible unless this waste has a pathway. And the only way this waste can have a pathway is if it is designated as defense waste.

Mr. TONKO. And the $75 million that is appropriated in fiscal year 2018 is also the level included in the Reed bill.

Mr. SHAW. Yes.

Mr. TONKO. What is the impact of underfunding West Valley?

Mr. SHAW. Well, in the past, the funding levels have been down in the 60s. That differential between 75 and in the 60s doesn't seem like a lot, however, when you consider that nearly more than a third of the budget is just to keep the lights on and keep it safe, that differential makes a big difference in the work that can be done on the site. There is a lot of work that is going to be happening over the course of the next 10, 15 years especially, as they start to go below grade in Phase II of the cleanup and, therefore, the need for sufficient funding is even more imperative going forward maybe than it has been in the past.

Mr. TONKO. Mr. Shaw, thank you. And my best to the NYSERDA team.

And with that, Mr. Chair, I yield back.

Mr. SHIMKUS. The gentleman yields back his time.

The Chair, seeing no other members wishing to ask questions, I would like to thank all our witnesses today.

Before we conclude, I would like to ask unanimous consent to submit the following documents for the record: a statement for the record from Carmelo Melendez, director, Office of Legacy Management at U.S. Department of Energy; a letter from the Colorado Department of Public Health and Environment; and a letter from Representative Scott Tipton.

[The information appears at the conclusion of the hearing.]

Mr. SHIMKUS. And pursuant to committee rules, I remind members that they have 10 business days to submit additional questions for the record, and ask the witnesses to submit their response within 10 business days upon receipt of the questions.

Without objection, the subcommittee is adjourned.

[Whereupon, at 10:00 a.m., the subcommittee was adjourned.]

[Material submitted for inclusion in the record follows:]

PREPARED STATEMENT OF HON. GREG WALDEN

Good morning and welcome to our subcommittee hearing where we will discuss legislation to reauthorize certain Department of Energy (DOE) environmental cleanup projects.

This Congress, the Energy & Commerce Committee, under the stewardship of Vice Chairman Barton and Energy Subcommittee Chairman Upton, has looked at several DOE programs with lapsed authorizations. Today, we will examine two of those projects within the jurisdiction of the Environment Subcommittee.

DOE's cleanup and disposal projects are not limited to high-level radioactive waste. The Department manages and monitors other environmental remediation projects such as sites authorized under the Formerly Utilized Sites Remedial Action Program (FUSRAP), the Comprehensive Environmental Response, Compensation, and Liability Act (CERCLA), and the Resource Conservation and Recovery Act (RCRA).

My Oregon district includes the Department's Lakeview Processing and Disposal Sites, which are overseen by DOE's Office of Legacy Management. At this location, a uranium mill processed ore fifty years ago, leaving behind mill tailings to be sent to a nearby disposal cell for safekeeping. When Congress passed the Uranium Mill Tailings Remediation Control Act of 1978, this site in my district was included as one of the 22 inactive ore processing sites to be remediated by DOE.

The bill sponsored by Representative Tipton extends the authorization of a similar disposal cell in his district and I am glad to support this effort.

Additionally, I welcome Representative Tom Reed to speak about the bill to reauthorize an important remediation project in his western New York district at the West Valley site. West Valley was the location of the nation's only commercial experience with reprocessing spent nuclear fuel. Cleanup at the site continues today, over forty years after the site's operations were terminated.

The Department of Energy and New York State witnesses this morning will provide additional context about DOE's ongoing activities at the site and remaining challenges, such as finalizing a disposal pathway for the project's high-level radioactive waste.

Last week—with a strong bipartisan vote in support—the House of Representatives helped pave the pathway for the restart of the Nation's nuclear waste disposal program with the passage of HR 3053. This should help address some of these long-term challenges. Yet, there are further issues to resolve to deal with our nation's legacy waste.

I look forward to working with my colleagues to advance these straightforward bills. Thank you and I yield back.

Statement for the Record of Carmelo Melendez
Director
Office of Legacy Management
U.S. Department of Energy
Before the
Committee on Energy and Commerce
Subcommittee on Environment
U.S. House of Representatives
May 18, 2018

Statement for the Record on H.R. 2278, the Responsible Disposal Reauthorization Act of 2017

Legacy waste cleanup is a top priority for the Department of Energy ("DOE" or the "Department"). Congress authorized the Cheney Disposal Cell near Grand Junction, Colorado (also known as the "Grand Junction, Colorado Disposal Site") as part of the Uranium Mill Tailings Radiation Control Act of 1978, as amended (UMTRCA). Under Title I of UMTRCA , DOE remediated 22 inactive uranium milling sites, mostly in the western U.S., and over 5,000 "vicinity properties" containing "residual radioactive material" (i.e., uranium mill tailings and other wastes) resulting from the processing of uranium ore for sale to the United States as part of the early days of the Nation's atomic energy program. The Cheney Disposal Cell initially contained residual radioactive material from a former uranium and vanadium milling site in Grand Junction, as well as a uranium milling site formerly located at the DOE Grand Junction Office. Under UMTRCA, it is also the only UMTRCA disposal cell that remains open to receive and dispose of additional residual radioactive material and related waste.

An important use of the Cheney Disposal Cell is the disposal of residual radioactive material from "vicinity properties." Because of the sandy, fine grained, nature of the mill tailings material, it was used in concrete and mortar for foundations of buildings, including homes, before it was understood that radon emissions from the tailings could create a health hazard. Uranium mill tailings were also used as backfill around structures and utilities. As part of Title I, mill tailings material from over 4,000 vicinity properties around Grand Junction, Colorado were placed in the cell.

DOE expects that additional residual radioactive material, primarily from the City of Grand Junction will need to be disposed of in the Cheney Disposal Cell. Other similar waste will need to be disposed of in the Cheney Disposal Cell from the town of Monticello, Utah and some sites around Tuba City, Arizona within the Navajo Nation. Finally, DOE Office of Legacy Management operates groundwater treatment systems at several sites that will continue to generate waste eligible for disposal in the Cheney Disposal Cell. As recently as 2017, residual radioactive material from a decommissioned water treatment pond at the Title I, Durango, CO, Disposal Site was disposed of in the Cheney Disposal Cell.

The Cheney Disposal Cell contains about 4.5 million cubic yards of residual radioactive material and similar waste and receives approximately 2,700 cubic yards of additional waste per year. The Cheney Disposal Cell has sufficient space to receive an estimated 235,000 cubic yards, which represents 86 more years of operation at current rates.

DOE will continue to work closely with Tribal, local, state, and federal officials to ensure the protection of public health, safety, and the environment by moving contaminated materials away from public places. The Department of Energy looks forward to continuing to work with this subcommittee on responsible disposal management of the Nation's legacy sites.

To members of the Environment Subcommittee of Energy and Commerce:

The Colorado Department of Public Health and Environment supports the Responsible Disposal Reauthorization Act of 2017, H.R. 2278, which extends the authorization of the Cheney disposal cell outside of Grand Junction, in Mesa County, Colorado until September 30, 2048.

The disposal cell currently receives uranium mill tailings waste from mill sites and vicinity properties located in Colorado. Each year approximately 2700 cubic yards of uranium mill tailings are deposited in the disposal cell. Given that this is the only Department of Energy uranium mill tailings disposal site left in the country, it is critical that this facility remains open to receive and dispose of the uranium mill tailings that are discovered in our communities. This action will ensure the continued protection of human health and the environment.

Thank you for this opportunity to comment and voice our support for this important legislation.

Martha Rudolph
Director of Environmental Programs
Colorado Department of Public Health and Environment

SCOTT R. TIPTON
3RD DISTRICT, COLORADO

218 CANNON HOUSE OFFICE BUILDING
(202) 225-4761

Congress of the United States
House of Representatives
Washington, DC 20515–0603

FINANCIAL SERVICES
FINANCIAL INSTITUTIONS AND CONSUMER CREDIT
OVERSIGHT AND INVESTIGATIONS
TERRORISM AND ILLICIT FINANCE

NATURAL RESOURCES
ENERGY AND MINERAL RESOURCES
FEDERAL LANDS

May 18, 2018

Chairman John Shimkus
House Energy and Commerce Subcommittee on the Environment
2125 Rayburn House Office Building
Washington, DC 20515

Ranking Member Paul Tonko
House Energy and Commerce Subcommittee on the Environment
2125 Rayburn House Office Building
Washington, DC 20515

Dear Chairman Shimkus and Ranking Member Tonko,

Thank you for convening a hearing on H.R. 2278, the Responsible Disposal Reauthorization Act. This bill would reauthorize the Department of Energy's (DOE) Cheney disposal cell outside of Grand Junction, CO, through fiscal year 2048. The Cheney cell, which is in Mesa County, Colorado, receives mill tailings waste from mill sites located in state. It accepts approximately 2,700 cubic yards of uranium mill tailings each year, and as the only DOE operated uranium mill tailings disposal site left in the country, it is a critical component of DOE Legacy Management's mission to protect public health and the environment.

Under current law, the DOE Secretary may operate the Cheney disposal cell until 2023 or until the site is filled to capacity. Currently, the remaining capacity in the cell is 234,000 cubic yards, and therefore an extended authorization is required.

The Colorado Department of Public Health and Environment supports H.R. 2278 and will remain a strong partner in DOE's Legacy Management program.

Following today's hearing, I hope the committee will move quickly to mark-up H.R. 2278, so we can provide more certainty on the future of the Cheney disposal cell to the Department of Energy, State of Colorado, and Mesa County, Colorado. Thank you for your consideration.

Sincerely,

Scott Tipton
Member of Congress

PRINTED ON RECYCLED PAPER

GREG WALDEN, OREGON
CHAIRMAN

FRANK PALLONE, JR., NEW JERSEY
RANKING MEMBER

ONE HUNDRED FIFTEENTH CONGRESS

Congress of the United States
House of Representatives
COMMITTEE ON ENERGY AND COMMERCE
2125 RAYBURN HOUSE OFFICE BUILDING
WASHINGTON, DC 20515–6115
Majority (202) 225-2927
Minority (202) 225-3641

June 5, 2018

Mr. Carmelo Melendez
Director
Office of Legacy Management
U.S. Department of Energy
1000 Independence Avenue, S.W.
Washington, DC 20585

Dear Mr. Melendez:

Thank you for submitting testimony to the Subcommittee on Environment regarding the May 18, 2018 hearing entitled "Legislative Hearing on H.R. 2278, the Responsible Disposal Reauthorization Act of 2017, and H.R. 2389, to reauthorize the West Valley demonstration project and for other purposes."

Pursuant to the Rules of the Committee on Energy and Commerce, the hearing record remains open for ten business days to permit Members to submit additional questions for the record, which are attached. To facilitate the printing of the hearing record, please respond to these questions with a transmittal letter by the close of business on Tuesday, June 19, 2018. Your responses should be mailed to Kelly Collins, Legislative Clerk, Committee on Energy and Commerce, 2125 Rayburn House Office Building, Washington, DC 20515 and e-mailed in Word format to kelly.collins@mail.house.gov.

Thank you again for your time and effort preparing and delivering testimony before the Subcommittee.

Sincerely,

John Shimkus
Chairman
Subcommittee on Environment

cc: The Honorable Paul Tonko, Ranking Member, Subcommittee on Environment

Attachment

HOUSE COMMITTEE ON ENERGY AND COMMERCE
QUESTIONS FOR THE RECORD RESPONSES FROM DIRECTOR CARMELO MELENDEZ

QUESTIONS FROM REPRESENTATIVE PALLONE, JR.

Q1. What are the trends in the volume of radioactive material disposed of in the Cheney Disposal Cell since 1978?

A1. The volume of radioactive material disposed of in the Cheney disposal cell varies from year to year. Remediation of the Grand Junction, Colorado, Processing Site (GJPS) began in December 1989 and construction of the Grand Junction, Colorado, Disposal Site (GJDS or the Cheney Disposal Cell) began in 1990. Approximately 4.4 million cubic yards of contaminated processing site materials, and vicinity property materials that were temporarily stored at the GJPS, were transported to the Cheney Disposal Cell by the end of 1994.

From 1998 to 2017, DOE received approximately 47,000 cubic yards of mill tailings from the City of Grand Junction's temporary storage facility (TSF), various UMTRCA Title I Sites, and direct hauls from vicinity properties. Quantities received each year ranged from 0 cubic yards to 11,352 cubic yards. The yearly average of material received at the Cheney Disposal Cell for the past 21 years was 2400 cubic yards.

Combining additional material that will be received from the TSF in 2018 with the material stockpiled for the last 4 years, DOE estimates it will place approximately 5,000 cubic yards of material in the Cheney Disposal Cell. In 2019, as part of preliminary activities to install a new east/west runway at the Grand Junction Regional Airport, an additional estimated 7,690 cubic yards of residual radioactive materials (RRM) will be transported to the Cheney Disposal Cell for final placement.

Q2. Are there other sites that are expected to contain vicinity products that are eligible to be disposed of in the Cheney Cell?

A2. The Cheney Disposal Cell is an UMTRCA Title I Site authorized to receive RRM from uranium milling operations at the original 22 Title I uranium milling sites remediated under UMTRCA that might be discovered after the completion of the DOE UMTRCA surface cleanup in 1998. In addition, the October 9, 1996, UMTRCA extension

authorized the Cheney Disposal Cell to receive RRM from the vicinity of the Monticello, Utah Site.

Q3. Are vicinity properties eligible for disposed of in the Cheney Disposal Cell being actively identified or is there just ongoing projects that need to be completed?

A3. There is no current program to identify additional vicinity properties.

Q4. Have there been any recent advances/changes in the ability of the DOE to identify vicinity properties?

A4. No. DOE identified vicinity properties during its surface remediation program that ended in 1998. No program exists to revisit these areas.

Q5. What is the schedule for the remediation of the groundwater treatment systems, Monticello, Utah, and Tuba City, Arizona, and how many years have they been actively remediated?

A5. The Monticello, Utah, Disposal Site was completed in June 2000. Final remediation of groundwater treatment systems is anticipated to be completed in 2040.

The Tuba City, Arizona, Disposal Site was completed in 1990 and extraction wells began pumping in 2002. Remediation is anticipated to be completed by 2024 or 2025.

Q6. When does the DOE expect the remediation at the Durango Disposal Site to be completed?

A6. All cleanup activities at the Durango Disposal Site were completed by 1998. That cell has had its final cover in place for 20 years.

Q7. If the radioactive wastes from the groundwater treatment systems could no longer go to the Cheney Disposal Cell where would they be taken for disposal?

A7. Currently, the remaining capacity in the cell is approximately 234,000 cubic yards. The closest alternative licensed facility is the Energy*Solutions*, facility in Clive, Utah.

Q8. If the radioactive wastes had to go to another disposal cell, would the cost to the DOE be significantly different?

A8. Yes, transportation cost would vary due to distance from the source and activity levels of the radiological material. Fees charged at other DOE and commercial sites to receive DOE's material are significant and vary widely depending on the configuration of the

transport package received, radiological activity levels, and the type and consistency of the material. However, it is certain that using another disposal site will be significantly more expensive, and would not be under DOE control.

Q9. Are there plans to remediate Lake Powell and will the radioactive uranium mill tailings from that site go to the Cheney Disposal cell?

A9. There are no plans to remediate Lake Powell.

Q10. Is there a projected date of when there will be no remaining radioactive wastes eligible for disposal in the Cheney Disposal? If not, does the DOE expect the cell to remain open for 86 years, (when it would be filled at the current rate)?

A10. There is no way to project a date when there will be no remaining radioactive wastes eligible for disposal at the Cheney Disposal Cell because there is no quantitative characterization of how much eligible waste exists (the location of known or suspected contaminated areas is documented, but there is no estimate of the volume of material). At an average of 2,700 cubic yards of material per year (between 1998 and 2014) received and a remaining capacity of approximately 234,000 cubic yards plus, the Cheney Disposal Cell would not be filled until the year 2104.

Q11. Is 25 years an appropriate amount of time to reauthorize the Cheney Disposal cell, and what are the justifications?

A11. At an average of 2,400 cubic yards of material per year (between 1998 and 2014) received and a remaining capacity of approximately 234,000 cubic yards plus, the Cheney Disposal Cell would not be filled until the year 2104 (86 years capacity).

Q12. Do you expect this to be the last extension of the disposal cell closure?

A12. There is no way to project when there will be no remaining radioactive wastes eligible for disposal at the Cheney Disposal Cell because there is no quantitative characterization of how much eligible waste exists.

GREG WALDEN, OREGON
CHAIRMAN

FRANK PALLONE, JR., NEW JERSEY
RANKING MEMBER

ONE HUNDRED FIFTEENTH CONGRESS

Congress of the United States
House of Representatives
COMMITTEE ON ENERGY AND COMMERCE
2125 RAYBURN HOUSE OFFICE BUILDING
WASHINGTON, DC 20515–6115
Majority (202) 225–2927
Minority (202) 225–3641

June 5, 2018

Mr. Mark Gilbertson
Associate Principal Deputy Assistant Secretary
Regulatory and Policy Affairs, Office of Environmental Management
U.S. Department of Energy
1000 Independence Avenue, S.W.
Washington, DC 20585

Dear Mr. Gilbertson:

Thank you for appearing before the Subcommittee on Environment on May 18, 2018, to testify at the hearing entitled "Legislative Hearing on H.R. 2278, the Responsible Disposal Reauthorization Act of 2017, and H.R. 2389, to reauthorize the West Valley demonstration project and for other purposes."

Pursuant to the Rules of the Committee on Energy and Commerce, the hearing record remains open for ten business days to permit Members to submit additional questions for the record, which are attached. Also attached are Member requests made during the hearing. To facilitate the printing of the hearing record, please respond to these questions and requests with a transmittal letter by the close of business on Tuesday, June 19, 2018. Your responses should be mailed to Kelly Collins, Legislative Clerk, Committee on Energy and Commerce, 2125 Rayburn House Office Building, Washington, DC 20515 and e-mailed in Word format to kelly.collins@mail.house.gov.

Thank you again for your time and effort preparing and delivering testimony before the Subcommittee.

Sincerely,

John Shimkus
Chairman
Subcommittee on Environment

cc: The Honorable Paul Tonko, Ranking Member, Subcommittee on Environment

Attachments

HOUSE COMMITTEE ON ENERGY AND COMMERCE
QUESTIONS FOR THE RECORD RESPONSES FROM ASSOCIATE PRINCIPAL DEPUTY ASSISTANT SECRETARY MARK GILBERTSON

MAY 18, 2018

QUESTIONS FROM CHAIRMAN SHIMKUS

ATTACHMENT 1

Q1. Last year Congress provided $15 million above the Administration's request to the West Valley Project.

Q1a. Will you describe how DOE is allocating this money that was appropriated above the request? For example, is there an aceleration plan you can share with the Committee?

A1. The additional $15M appropriated by Congress for the West Valley Demonstration Project (WVDP) has been allocated to accelerate multiple activities at the site. The additional funding supported the acceleration of Mixed Low Level Waste (MLLLW) and Low Level Waste (LLW) legacy waste shipments by 9 months with a forecast completion in mid-August 2018. The MLLW and LLW were shipped to the Nevada National Security Site and commercial disposal facilities. The Vitrification Facility demolition project (including removal of debris) has been provided additional resources to accelerate completion by two months with a forecast completion by 2nd quarter FY 2019.

The additional funds also supported key infrastructure needs, including the reconfiguration and replacement of the natural gas system, which was at the end of its lifespan, and the reconfiguration of the electrical system – both necessary for efficient and safe cleanup of the West Valley site.

Q1b. What have been the successes to date by the contractor and Fed team working on the project?

A1b. The successes to date by the contractor and Federal team at WVDP have been:

- The complete relocation of 275 canisters of vitrified high-level waste to long-term interim storage ahead of schedule;
- acceleration of legacy waste shipments off-site for disposal, including the shipment of three large Vitrification Facility components;
- successful ongoing demolition of the Vitrification Facility;

- continued work to deactivate the Main Plant Process Building to support its eventual demolition;
- removal of the balance–of–site facilities (21 facilities); and
- reconfiguration of site infrastructure to support facility demolition.

Additionally, the construction of a new water treatment building and the installation of a new data center building have been completed this fiscal year.

Q2. New York State notes that DOE's plan to dispose of what is known as "greater-than-class-c" (GTCC) waste excludes the West Valley waste from being disposed of at DOE's Waste Isolation Pilot Plant (WIPP) in New Mexico. What is DOE's current plan to dispose of GTCC and will DOE take steps to assure that West Valley's "GTCC-like" material is incorporated into that respective plan?

A2. In February 2016, the Department of Energy (DOE) issued the *Final Environmental Impact Statement for the Disposal of Greater-Than-Class C (GTCC) Low-Level Radioactive Waste and GTCC-Like Waste* (DOE/EIS-0375), which included a preferred alternative for disposal at generic commercial facilities and/or at the Waste Isolation Pilot Plant (WIPP). West Valley's GTCC low-level radioactive waste (LLW) and GTCC-like waste is included in the waste inventory analyzed in the final environmental impact statement (EIS). In November 2017, DOE submitted a Report to Congress that described the GTCC LLW disposal alternatives considered in the EIS and other related information as required by Section 631 of the Energy Policy Act of 2005. DOE is primarily considering disposal of GTCC LLW and GTCC-like waste at generic commercial facilities. The EIS and Report to Congress does not constitute a final decision on GTCC LLW and GTCC-like waste disposal, but they do represent progress towards a disposal path for such waste.

Q3. Located in west Texas, Waste Control Specialists, LLC (WCS) operates a disposal facility for certain low-level radioactive wastes, and the State of Texas and the Nuclear Regulatory Commission are considering if the site could be regulated as a commercial disposal facility for "greater-than-class-c" material.

Q3a. Are you aware of any West Valley waste that has been sent to the WCS facility? If so, what material has been disposed of in Texas?

A3. To date, no greater-than-Class-C (GTCC) low-level radioactive waste (LLW) or GTCC-like waste from West Valley has been disposed of at WCS. In December 2016, the following LLW was shipped from West Valley and disposed of at WCS: a 195-ton melter

used in the vitirification process; a 167-ton concentrator feed make-up tank; and a 150-ton melter feed hold tank.

Q3b. Are there any statutory barriers that limit sending waste streams to WCS?

Q3b. The State of Texas currently prohibits the disposal of GTCC LLW at WCS. The WCS facility is licensed by the State of Texas as a Nuclear Regulatory Commission (NRC) Agreement State (Texas has entered into an agreement with NRC pursuant to section 274 of the Atomic Energy Act (AEA) of 1954 to regulate certain AEA-licensed material within its borders). In 2015, Texas sent a letter to the NRC requesting guidance on whether Texas is authorized to license a disposal facility for certain waste, including GTCC LLW and GTCC-like waste. After receiving direction from the Commission, the NRC staff sent a response to the State of Texas in March 2016, explaining that the NRC will develop a regulatory basis to address disposal requirements for GTCC LLW, and conduct an analysis to determine if GTCC LWW presents a hazard such that the NRC should retain authority over its disposal. NRC continues to work on this matter. Section 3(b)(2) of the Low-Level Radioactive Waste Policy Act as amended specifies that GTCC LLW generated by NRC-licensed activities shall be disposed of in a facility licensed by the NRC and determined by NRC to be adquate to protect public health and safety. DOE identified this requirement as an area for potential legislative clarification in its 2017 Report to Congress on Alternatives for the Disposal of GTCC LLW and GTCC-Like Waste.

ATTACHMENT 2

QUESTION FROM CHAIRMAN SHIMKUS

Q1. According to New York, there is a balance of nearly $30 million set aside to pay for disposal costs in a trust fund from a legacy amount in 2016. But, in 1986, the DOE, Department of Energy IG, said the State would owe $68 million to the Nuclear Waste Fund. Has DOE reassessed how much would be due to the waste fund based on that outdated estimate?

A1. No, DOE does not have a current estimate of how much would be due.

QUESTION FROM REPRESENTATIVE FLORES

Q1. What would happen if the Cheney site is closed?

A1. If the Cheney site were closed, any tailings discovered would have to go to another site for disposal.

GREG WALDEN, OREGON
CHAIRMAN

FRANK PALLONE, JR., NEW JERSEY
RANKING MEMBER

ONE HUNDRED FIFTEENTH CONGRESS

Congress of the United States
House of Representatives
COMMITTEE ON ENERGY AND COMMERCE
2125 RAYBURN HOUSE OFFICE BUILDING
WASHINGTON, DC 20515-6115
Majority (202) 225-2927
Minority (202) 225-3641

June 5, 2018

Mr. Noah C. Shaw
General Counsel and Secretary
New York State Energy Research
and Development Authority
17 Columbia Circle
Albany, NY 12203

Dear Mr. Shaw:

Thank you for appearing before the Subcommittee on Environment on May 18, 2018, to testify at the hearing entitled "Legislative Hearing on H.R. 2278, the Responsible Disposal Reauthorization Act of 2017, and H.R. 2389, to reauthorize the West Valley demonstration project and for other purposes."

Pursuant to the Rules of the Committee on Energy and Commerce, the hearing record remains open for ten business days to permit Members to submit additional questions for the record, which are attached. To facilitate the printing of the hearing record, please respond to these questions with a transmittal letter by the close of business on Tuesday, June 19, 2018. Your responses should be mailed to Kelly Collins, Legislative Clerk, Committee on Energy and Commerce, 2125 Rayburn House Office Building, Washington, DC 20515 and e-mailed in Word format to kelly.collins@mail.house.gov.

Thank you again for your time and effort preparing and delivering testimony before the Subcommittee.

Sincerely,

John Shimkus
Chairman
Subcommittee on Environment

cc: The Honorable Paul Tonko, Ranking Member, Subcommittee on Environment

Attachment

ANDREW M. CUOMO
Governor

RICHARD L. KAUFFMAN
Chair

ALICIA BARTON
President and CEO

June 19, 2018

Kelly Collins
Legislative Clerk
Committee on Energy and Commerce
2125 Rayburn House Office Building
Washington, DC 20515
Via hard copy and electronic mail: kelly.collins@mail.house.gov

Re: Legislative Hearing on H.R. 2278 (Additional Questions)

Dear Ms. Collins:

I write in response to Representative Shimkus's letter dated June 5, 2018 posing Additional Questions for the Record regarding my May 18, 2018 testimony at the Legislative Hearing on H.R. 2278. I am pleased to provide the following responses to his questions.

Question 1: In West Texas, the Waste Control Specialists operates a nuclear waste disposal facility for commercial and federal wastes classified as Class A, B, or C. Has any of the West Valley waste been sent to WCS for disposal?

> **Answer:** The Department of Energy (DOE) has shipped West Valley waste to WCS in Texas, specifically the Vitrification Facility Melter and two Vitrification Facility tanks called the Melter Feed Hold Tank and the Concentrator Feed Make-up Tank. These items were shipped to WCS in late 2016. In addition, a component from the West Valley site's Liquid Waste Treatment System (a separator) was shipped to WCS for disposal earlier this year. The WCS facility accepts both commercial and federal waste and is not limited to accept only defense waste. As such, DOE did not have to classify these West Valley wastes as defense waste to send them to WCS for disposal.

Question 1.a: If so, how were the costs covered? If not, have you examined if this is an option for disposal of the material that you suggest should be sent to WIPP?

> The cost for disposing of those items at WCS was covered as a West Valley Demonstration Project cost. This means the cost was split between DOE and NYSERDA

as stipulated by Congress in the West Valley Demonstration Project Act – 90 percent was paid by DOE and 10 percent was paid by NYSERDA. The waste NYSERDA believes should be disposed of at WIPP is the WVDP transuranic waste (TRU). Under the Low-Level Radioactive Waste Policy Act of 1980 (and the Low-Level Radioactive Waste Policy Amendments Act of 1985), TRU waste is not Low-Level Waste, and as such, cannot be disposed of in a Low-Level Waste disposal facility, including the WCS facility in Texas.[1] WIPP accepts TRU, but only defense TRU. The proper classification of the West Valley waste as defense waste would provide a proper disposal path for the West Valley TRU to go to WIPP, the only facility in the Nation currently accepting TRU waste.

Question 2.a: I understand that the State of New York has shared a portion of the project's costs, as required by the law. Can you estimate about how much the State has paid over the course of the project?

Answer: The State has paid approximately $420.5 million since 1981.

Question 2.b: Does this funding come straight from the State treasury or is there an alternative source of funding?

Answer: Yes, this funding comes from annual capital project appropriations out of the State's general fund. There are no available alternate sources of State funds for West Valley costs, whether such costs may be related to the project or to any fees that may be necessary for eventual disposal of the waste.

Question 3.a: The high-level radioactive waste generated as a result of the operations at the West Valley site appear to not be covered under previous contributions to the Nuclear Waste Fund, although some of the material would likely be destined to the repository. Based on the DOE Inspector General assessment over 30 years ago, has the State examined how much it would be expected to provide to the Waste Fund, adjusted for inflation?

Answer: Yes. By the State's calculations, accounting for inflation and interest, the State estimates that it would be expected to provide $2.3 billion to the Waste Fund if a repository option is available by 2042, and DOE is prepared to ship West Valley's high level waste. The State has requested an updated calculation from DOE of the eventual fee, but none has been provided.

---

[1] The NRC has been considering an inquiry from the Texas Commission on Environmental Quality in regard to whether it possesses the authority to license a GTCC waste disposal cell that would receive GTCC, GTCC-like, and transuranic (TRU) waste streams. On December 22, 2015, the Nuclear Regulatory Commission directed NRC staff to prepare a regulatory basis for the disposal of GTCC and transuranic waste; conduct a public workshop during the development of the regulatory basis to receive input from stakeholders; and address transuranic waste in Part 61. These activities are ongoing.

Question 3.b: Do you know if the State's expected contribution is accounted for in the Department's annual audit of the Nuclear Waste Fund and specifically the estimated revenues projected through payment of what is known as the "one-time fee?"

> **Answer:** It does not appear from DOE's most recent audit that the audit takes into account the State's expected contribution. The audit appears to address utility standard contract obligations, and not the unique circumstances related to West Valley (i.e., DOE's previous commitment to accept the perpetual care fund as payment at the time of HLW waste disposal, the federal government's role in establishing the facility, and the federal government's decommissioning effort being conducted at West Valley with a 90/10 federal/state cost split as stipulated by Congress.)

Question 4: Does New York envision the West Valley site can be repurposed in the future for alternative uses and, if so, has the State considered what some of those uses may be?

> **Answer:** Until the final ("Phase 2") decommissioning decisions have been made by DOE and NYSERDA, it is unknown how much property, if any, can be repurposed, and if it can, for what use. To inform these final decommissioning decisions, DOE and NYSERDA are now jointly preparing a Supplemental Environmental Impact Statement for Phase 2 decommissioning. Phase 2 decommissioning includes the HLW tanks, groundwater plume, and the radioactive waste disposal areas. The amount of property available for reuse will be dependent, in significant part, on the decommissioning alternative selected for implementation. The Phase 2 decommissioning decisions will be made by DOE and NYSERDA in 2022.
>
> In response to a specific request from the Town of Ashford (the location of the West Valley site), NYSERDA is considering leasing a 50-acre parcel of the Retained Premises – property owned by NYSERDA, not subject to the West Valley Demonstration Project Act, and on which little or no site activity ever took place – to the town for the development a solar photovoltaic generation facility. The proposed arrangement would provide renewable energy to the electric grid and would provide the opportunity for residents of the town and other members of the public to purchase renewable energy from the solar facility. Because the final decommissioning decisions have not been made, the property would stay under NYSERDA ownership and the U.S. NRC license, and public access to the property would continue to be prohibited.

I remain available to discuss any further inquiries the Committee may have. Thank you for your interest in this issue of importance to New Yorkers.

Sincerely,

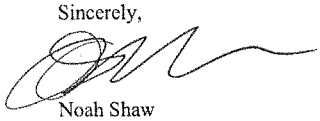

Noah Shaw
General Counsel

NEW YORK STATE OF OPPORTUNITY. | NYSERDA

ANDREW M. CUOMO
Governor

RICHARD L. KAUFFMAN
Chair

ALICIA BARTON
President and CEO

June 19, 2018

Kelly Collins
Legislative Clerk
Committee on Energy and Commerce
2125 Rayburn House Office Building
Washington, DC 20515
Via hard copy and electronic mail: kelly.collins@mail.house.gov

Re: Legislative Hearing on H.R. 2278 (Additional Questions)

Dear Ms. Collins:

I write in response to Representative Shimkus's letter dated June 5, 2018 posing Additional Questions for the Record regarding my May 18, 2018 testimony at the Legislative Hearing on H.R. 2278. I am pleased to provide the following responses to his questions.

Question 1: In West Texas, the Waste Control Specialists operates a nuclear waste disposal facility for commercial and federal wastes classified as Class A, B, or C. Has any of the West Valley waste been sent to WCS for disposal?

Answer: The Department of Energy (DOE) has shipped West Valley waste to WCS in Texas, specifically the Vitrification Facility Melter and two Vitrification Facility tanks called the Melter Feed Hold Tank and the Concentrator Feed Make-up Tank. These items were shipped to WCS in late 2016. In addition, a component from the West Valley site's Liquid Waste Treatment System (a separator) was shipped to WCS for disposal earlier this year. The WCS facility accepts both commercial and federal waste and is not limited to accept only defense waste. As such, DOE did not have to classify these West Valley wastes as defense waste to send them to WCS for disposal.

Question 1.a: If so, how were the costs covered? If not, have you examined if this is an option for disposal of the material that you suggest should be sent to WIPP?

The cost for disposing of those items at WCS was covered as a West Valley Demonstration Project cost. This means the cost was split between DOE and NYSERDA

as stipulated by Congress in the West Valley Demonstration Project Act – 90 percent was paid by DOE and 10 percent was paid by NYSERDA. The waste NYSERDA believes should be disposed of at WIPP is the WVDP transuranic waste (TRU). Under the Low-Level Radioactive Waste Policy Act of 1980 (and the Low-Level Radioactive Waste Policy Amendments Act of 1985), TRU waste is not Low-Level Waste, and as such, cannot be disposed of in a Low-Level Waste disposal facility, including the WCS facility in Texas.[1] WIPP accepts TRU, but only defense TRU. The proper classification of the West Valley waste as defense waste would provide a proper disposal path for the West Valley TRU to go to WIPP, the only facility in the Nation currently accepting TRU waste.

Question 2.a: I understand that the State of New York has shared a portion of the project's costs, as required by the law. Can you estimate about how much the State has paid over the course of the project?

Answer: The State has paid approximately $420.5 million since 1981.

Question 2.b: Does this funding come straight from the State treasury or is there an alternative source of funding?

Answer: Yes, this funding comes from annual capital project appropriations out of the State's general fund. There are no available alternate sources of State funds for West Valley costs, whether such costs may be related to the project or to any fees that may be necessary for eventual disposal of the waste.

Question 3.a: The high-level radioactive waste generated as a result of the operations at the West Valley site appear to not be covered under previous contributions to the Nuclear Waste Fund, although some of the material would likely be destined to the repository. Based on the DOE Inspector General assessment over 30 years ago, has the State examined how much it would be expected to provide to the Waste Fund, adjusted for inflation?

Answer: Yes. By the State's calculations, accounting for inflation and interest, the State estimates that it would be expected to provide $2.3 billion to the Waste Fund if a repository option is available by 2042, and DOE is prepared to ship West Valley's high level waste. The State has requested an updated calculation from DOE of the eventual fee, but none has been provided.

---

[1] The NRC has been considering an inquiry from the Texas Commission on Environmental Quality in regard to whether it possesses the authority to license a GTCC waste disposal cell that would receive GTCC, GTCC-like, and transuranic (TRU) waste streams. On December 22, 2015, the Nuclear Regulatory Commission directed NRC staff to prepare a regulatory basis for the disposal of GTCC and transuranic waste; conduct a public workshop during the development of the regulatory basis to receive input from stakeholders; and address transuranic waste in Part 61. These activities are ongoing.

Question 3.b: Do you know if the State's expected contribution is accounted for in the Department's annual audit of the Nuclear Waste Fund and specifically the estimated revenues projected through payment of what is known as the "one-time fee?"

> **Answer:** It does not appear from DOE's most recent audit that the audit takes into account the State's expected contribution. The audit appears to address utility standard contract obligations, and not the unique circumstances related to West Valley (i.e., DOE's previous commitment to accept the perpetual care fund as payment at the time of HLW waste disposal, the federal government's role in establishing the facility, and the federal government's decommissioning effort being conducted at West Valley with a 90/10 federal/state cost split as stipulated by Congress.)

Question 4: Does New York envision the West Valley site can be repurposed in the future for alternative uses and, if so, has the State considered what some of those uses may be?

> **Answer:** Until the final ("Phase 2") decommissioning decisions have been made by DOE and NYSERDA, it is unknown how much property, if any, can be repurposed, and if it can, for what use. To inform these final decommissioning decisions, DOE and NYSERDA are now jointly preparing a Supplemental Environmental Impact Statement for Phase 2 decommissioning. Phase 2 decommissioning includes the HLW tanks, groundwater plume, and the radioactive waste disposal areas. The amount of property available for reuse will be dependent, in significant part, on the decommissioning alternative selected for implementation. The Phase 2 decommissioning decisions will be made by DOE and NYSERDA in 2022.
>
> In response to a specific request from the Town of Ashford (the location of the West Valley site), NYSERDA is considering leasing a 50-acre parcel of the Retained Premises – property owned by NYSERDA, not subject to the West Valley Demonstration Project Act, and on which little or no site activity ever took place – to the town for the development a solar photovoltaic generation facility. The proposed arrangement would provide renewable energy to the electric grid and would provide the opportunity for residents of the town and other members of the public to purchase renewable energy from the solar facility. Because the final decommissioning decisions have not been made, the property would stay under NYSERDA ownership and the U.S. NRC license, and public access to the property would continue to be prohibited.

I remain available to discuss any further inquiries the Committee may have. Thank you for your interest in this issue of importance to New Yorkers.

Sincerely,

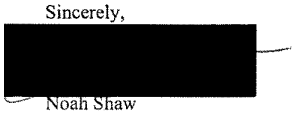

Noah Shaw
General Counsel