AUTHENTICATED
U.S. GOVERNMENT
INFORMATION
GPO

A REVIEW OF THE NETWORKING AND INFORMATION TECHNOLOGY RESEARCH AND DEVELOPMENT (NITRD) PROGRAM

HEARING

BEFORE THE

SUBCOMMITTEE ON RESEARCH AND TECHNOLOGY

COMMITTEE ON SCIENCE, SPACE, AND TECHNOLOGY

HOUSE OF REPRESENTATIVES

ONE HUNDRED FOURTEENTH CONGRESS

FIRST SESSION

October 28, 2015

Serial No. 114–46

Printed for the use of the Committee on Science, Space, and Technology

Available via the World Wide Web: http://science.house.gov

U.S. GOVERNMENT PUBLISHING OFFICE

97–765PDF WASHINGTON : 2017

For sale by the Superintendent of Documents, U.S. Government Publishing Office
Internet: bookstore.gpo.gov Phone: toll free (866) 512–1800; DC area (202) 512–1800
Fax: (202) 512–2104 Mail: Stop IDCC, Washington, DC 20402–0001

COMMITTEE ON SCIENCE, SPACE, AND TECHNOLOGY

HON. LAMAR S. SMITH, Texas, *Chair*

FRANK D. LUCAS, Oklahoma
F. JAMES SENSENBRENNER, JR., Wisconsin
DANA ROHRABACHER, California
RANDY NEUGEBAUER, Texas
MICHAEL T. MCCAUL, Texas
MO BROOKS, Alabama
RANDY HULTGREN, Illinois
BILL POSEY, Florida
THOMAS MASSIE, Kentucky
JIM BRIDENSTINE, Oklahoma
RANDY K. WEBER, Texas
BILL JOHNSON, Ohio
JOHN R. MOOLENAAR, Michigan
STEVE KNIGHT, California
BRIAN BABIN, Texas
BRUCE WESTERMAN, Arkansas
BARBARA COMSTOCK, Virginia
GARY PALMER, Alabama
BARRY LOUDERMILK, Georgia
RALPH LEE ABRAHAM, Louisiana
DARIN LAHOOD, Illinois

EDDIE BERNICE JOHNSON, Texas
ZOE LOFGREN, California
DANIEL LIPINSKI, Illinois
DONNA F. EDWARDS, Maryland
SUZANNE BONAMICI, Oregon
ERIC SWALWELL, California
ALAN GRAYSON, Florida
AMI BERA, California
ELIZABETH H. ESTY, Connecticut
MARC A. VEASEY, Texas
KATHERINE M. CLARK, Massachusetts
DON S. BEYER, JR., Virginia
ED PERLMUTTER, Colorado
PAUL TONKO, New York
MARK TAKANO, California
BILL FOSTER, Illinois

SUBCOMMITTEE ON RESEARCH AND TECHNOLOGY

HON. BARBARA COMSTOCK, Virginia, *Chair*

FRANK D. LUCAS, Oklahoma
MICHAEL T. MCCAUL, Texas
RANDY HULTGREN, Illinois
JOHN R. MOOLENAAR, Michigan
BRUCE WESTERMAN, Arkansas
DAN NEWHOUSE, Washington
GARY PALMER, Alabama
RALPH LEE ABRAHAM, Louisiana
LAMAR S. SMITH, Texas

DANIEL LIPINSKI, Illinois
ELIZABETH H. ESTY, Connecticut
KATHERINE M. CLARK, Massachusetts
PAUL TONKO, New York
SUZANNE BONAMICI, Oregon
ERIC SWALWELL, California
EDDIE BERNICE JOHNSON, Texas

CONTENTS

October 28, 2015

	Page
Witness List	2
Hearing Charter	3

Opening Statements

Statement by Representative Barbara Comstock, Chairwoman, Subcommittee on Research and Technology, Committee on Science, Space, and Technology, U.S. House of Representatives	10
Written Statement	13
Statement by Representative Daniel Lipinski, Ranking Minority Member, Subcommittee on Research and Technology, Committee on Science, Space, and Technology, U.S. House of Representatives	13
Written Statement	15
Statement by Representative Lamar S. Smith, Chairman, Committee on Science, Space, and Technology, U.S. House of Representatives	18
Written Statement	20
Statement by Representative Eddie Bernice Johnson, Ranking Member, Committee on Science, Space, and Technology, U.S. House of Representatives	23
Written Statement	24

Witnesses:

Dr. Keith Marzullo, Director, National Coordination Office, The Networking and Information Technology Research and Development Program	
Oral Statement	26
Written Statement	29
Dr. Gregory D. Hager, Mandell Bellmore Professor, Department of Computer Science, Johns Hopkins University; Co-Chair, NITRD Working Group, The President's Council of Advisors on Science and Technology	
Oral Statement	41
Written Statement	44
Dr. Edward Seidel, Director, National Center for Supercomputing Applications, University of Illinois at Urbana-Champaign	
Oral Statement	54
Written Statement	56
Discussion	65

Appendix I: Answers to Post-Hearing Questions

Dr. Keith Marzullo, Director, National Coordination Office, The Networking and Information Technology Research and Development Program	78
Dr. Gregory D. Hager, Mandell Bellmore Professor, Department of Computer Science, Johns Hopkins University; Co-Chair, NITRD Working Group, The President's Council of Advisors on Science and Technology	102
Dr. Edward Seidel, Director, National Center for Supercomputing Applications, University of Illinois at Urbana-Champaign	116

Page

Appendix II: Additional Material for the Record

Statement submitted by Dr. Kenneth Ball, Dean, Volgenau School of Engineering, George Mason University 132

A REVIEW OF THE NETWORKING AND INFORMATION TECHNOLOGY RESEARCH AND DEVELOPMENT (NITRD) PROGRAM

WEDNESDAY, OCTOBER 28, 2015

HOUSE OF REPRESENTATIVES,
SUBCOMMITTEE ON RESEARCH AND TECHNOLOGY,
COMMITTEE ON SCIENCE, SPACE, AND TECHNOLOGY,
Washington, D.C.

The Subcommittee met, pursuant to call, at 10:05 a.m., in Room 2318 of the Rayburn House Office Building, Hon. Barbara Comstock [Chairwoman of the Subcommittee] presiding.

LAMAR S. SMITH, Texas
CHAIRMAN

EDDIE BERNICE JOHNSON, Texas
RANKING MEMBER

Congress of the United States
House of Representatives
COMMITTEE ON SCIENCE, SPACE, AND TECHNOLOGY
2321 RAYBURN HOUSE OFFICE BUILDING
WASHINGTON, DC 20515-6301
(202) 225-6371
www.science.house.gov

Subcommittee on Research and Technology

A Review of the Networking and Information Technology Research and Development (NITRD) Program

Wednesday, October 28, 2015
10:00 a.m. to 12:00 p.m.
2318 Rayburn House Office Building

Witnesses

***Dr. Keith Marzullo**, Director, National Coordination Office, The Networking and Information Technology Research and Development Program (NITRD)*

***Dr. Gregory D. Hager**, Mandell Bellmore Professor, Department of Computer Science, Johns Hopkins University; Co-Chair, NITRD Working Group, The President's Council of Advisors on Science and Technology*

***Dr. Edward Seidel**, Director, National Center for Supercomputing Applications, University of Illinois at Urbana-Champaign*

U.S. HOUSE OF REPRESENTATIVES
COMMITTEE ON SCIENCE, SPACE, AND TECHNOLOGY
RESEARCH AND TECHNOLOGY SUBCOMMITTEE

HEARING CHARTER

A Review of the Networking and Information Technology Research and Development (NITRD) Program

Wednesday, October 28, 2015
10:00 a.m. – 12:00 p.m.
2318 Rayburn House Office Building

Purpose

On Wednesday, October 28, 2015, the Subcommittee on Research and Technology will hold a hearing to discuss the Networking and Information Technology Research and Development (NITRD) program, a crosscutting, multi-agency effort to coordinate federal research and development (R&D) funding for "revolutionary breakthroughs in advanced information technologies such as computing, networking, and software."[1] The cross-agency budget request for NITRD is $4.09 billion in FY2016.[2] The hearing will also discuss the recent President's Council of Advisors on Science and Technology's report on the NITRD program published in August 2015.

Witnesses

- Dr. Keith Marzullo, Director, National Coordination Office, The Networking and Information Technology Research and Development Program
- Dr. Gregory D. Hager, Mandell Bellmore Professor, Department of Computer Science, Johns Hopkins University; Co-Chair, NITRD Working Group, The President's Council of Advisors on Science and Technology
- Dr. Edward Seidel, Director, National Center for Supercomputing Applications, University of Illinois at Urbana-Champaign

OVERVIEW

The United States has been a world leader in networking and information technology (NIT). Federal support for research and development (R&D) in NIT originally stemmed from an interest in and the challenge of developing computers capable of addressing complex problems, primarily those focused on national security and high-end applications. Over the past few decades, federal spending for NIT R&D has encompassed a broad array of technologies, from digital libraries to cloud computing. The eventual commercial applications for such federally-funded R&D have fundamentally changed the way modern-day Americans work and live.

---

[1] See: https://www.nitrd.gov/about/about_nitrd.aspx.
[2] See: https://www.nitrd.gov/PUBS/2016supplement/FY2016NITRDSupplement-Investments.pdf.

Additionally, R&D in NIT provides a greater understanding of how to protect essential systems and networks that support fundamental sectors of our economy, from emergency communications and power grids to air-traffic control networks and national defense systems. NIT R&D works to prevent or minimize disruptions to critical information infrastructure, to protect public and private services, to detect and respond to threats while mitigating the severity of and assisting in the recovery from those threats.

THE NITRD PROGRAM

Background and Overview

The High Performance Computing Act of 1991 (P.L. 102-194) authorized the precursor of the NITRD program, then called the High Performance Computing and Communications program, to accelerate progress in the advancement of computing and networking technologies and to support leading edge computational research in a range of science and engineering fields.

The name of the program has since evolved to the Networking and Information Technology Research and Development (NITRD) program, and as required by the High-Performance Computing Act of 1991 (P.L. 102-194), the Next Generation Internet Research Act of 1998 (P.L. 105-305), and the America COMPETES (Creating Opportunities to Meaningfully Promote Excellence in Technology, Education, and Science) Act of 2007 (P.L. 110-69), the NITRD program provides a framework and mechanisms for coordination among the Federal agencies that support advanced information technology (IT) R&D and report IT research budgets across the federal budget.[3]

The NITRD program is the main source of federally funded work on advanced information technologies in networking, computing, and software, totaling an estimated $4.0 billion in FY2015 (with the National Science Foundation being the principal contributor with over $1.1 billion of that total). The NITRD program supports a number of research areas through its interagency coordination, including big data, cyber physical systems, cybersecurity, health technology, high performance computing, and large scale networking.[4]

The National Coordinating Office

The National Coordinating Office (NCO) was established in September 1992, and it supports the planning, coordination, budget, and assessment activities of the NITRD program.[5] In addition, the NCO supports the National Science and Technology Council's Subcommittee on NITRD (the NITRD Subcommittee), which provides policy, program, and budget planning guidance for the NITRD Program and is composed of representatives from each of the participating agencies, OSTP, Office of Management and Budget (OMB), and the NCO.[6] The

[3] Supplement to the President's Budget: FY 2016, The Networking and Information Technology Research and Development Program, February 2015, available at: https://www.nitrd.gov/pubs/2016supplement/FY2016NITRDSupplement.pdf
[4] Ibid.
[5] Moloney Figliola, Patricia, "The Federal Networking and Information Technology Research and Development Program: Background, Funding, and Activities," Congressional Research Service, August 3, 2015, available at: http://www.crs.gov/reports/pdf/RL33586
[6] Ibid.

director of the NCO is appointed by and reports to the Office of Science and Technology Policy (OSTP) director.

An overview of the reporting structure of the NITRD program:

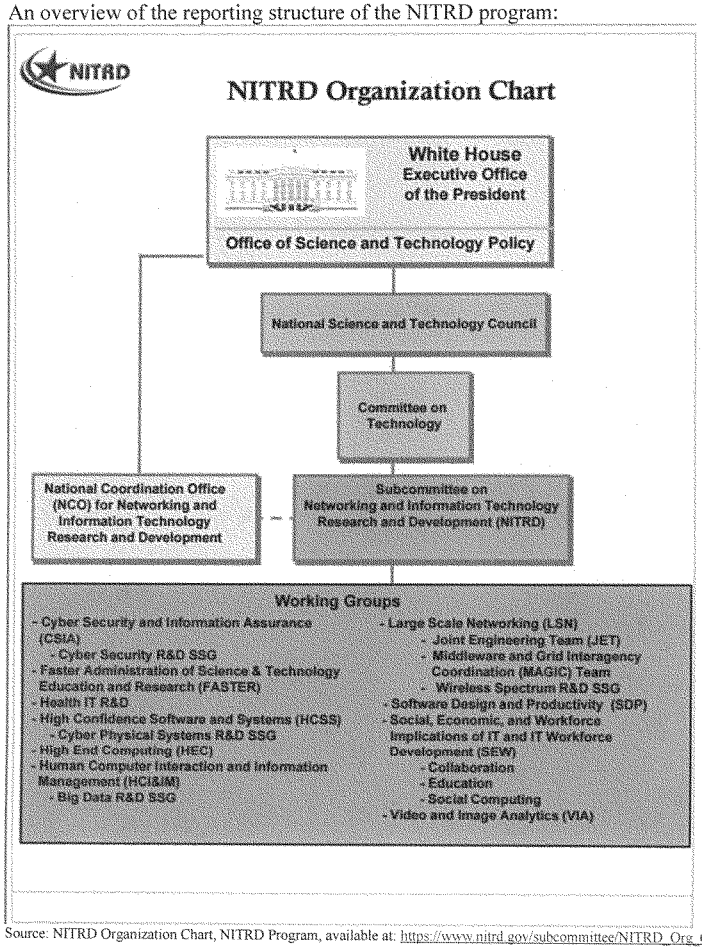

Source: NITRD Organization Chart, NITRD Program, available at: https://www.nitrd.gov/subcommittee/NITRD_Org_Chart.pdf

Assessment of NITRD by the President's Council of Advisors on Science and Technology (PCAST)

Executive Order 13539 assigned the President's Council of Advisors on Science and Technology (PCAST) to periodically review the NITRD program. This past August, PCAST completed its most recent assessment of NITRD and issued a report to the President and Congress, "Ensuring Leadership in Federally Funded Research and Development in Information Technology," which calls for "a refreshed R&D investment portfolio and coordination process given the pressing concerns of the IT ecosystem."[7]

The PCAST report focuses on eight specific R&D areas including: cybersecurity, IT and health, big data and data-intensive computing, IT and the physical world, privacy protection, cyber-human systems, high capability computing, and foundational computing research. Since many of the Program Component Areas (PCAs) have gone largely unchanged since the mid-1990s, the report also calls for a modernized set of categories for IT R&D spending, and suggests updating those categories every five to six years.[8]

History of NITRD PCAs

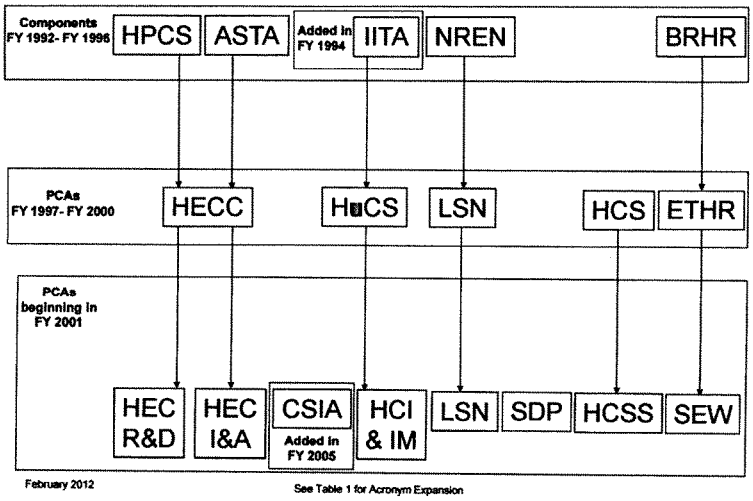

[7] "Ensuring Leadership in Federally Funded Research and Development in Information Technology," President's Council of Advisors on Science and Technology, August 2015, available at: https://www.whitehouse.gov/sites/default/files/microsites/ostp/PCAST/nitrd_report_aug_2015.pdf
[8] Ibid.

Table 1
Acronym Expansion

ASTA— Advanced Software Technology and Algorithms	HEC R&D— High End Computing Research and Development
BRHR— Basic Research and Human Resources	HPCS —High Performance Computing Systems
CSIA— Cyber Security and Information Assurance	HuCS— Human Centered Systems
ETHR — Education, Training, and Human Resources	IITA —Information Infrastructure Technology and Applications
HCI & IM — Human Computer Interaction and Information Management	LSN — Large Scale Networking
HCS — High Confidence Systems	NREN — National Research and Education Network
HCSS — High Confidence Software and Systems	PCA— Program Component Area
HECC— High End Computing and Computation	SDP — Software Design and Productivity
HEC I&A— High End Computing Infrastructure and Applications	SEW— Social, Economic, and Workforce Implications of IT and IT Workforce Development

February 2012

Source: History of NITRD PCAs, NITRD Program, available at: https://www.nitrd.gov/about/about_nitrd/nitrd_history/new-pca-names.pdf

To read the report and its recommendations in its entirety, please see: "Ensuring Leadership in Federally Funded Research and Development in Information Technology," President's Council of Advisors on Science and Technology, August 2015, available at: https://www.whitehouse.gov/sites/default/files/microsites/ostp/PCAST/nitrd_report_aug_2015.pdf

Chairwoman COMSTOCK. The Subcommittee on Research and Technology will come to order.

Without objection, the Chair is authorized to declare recesses of the Committee at any time.

Welcome to today's hearing entitled "A Review of the Networking and Information Technology Research and Development (NITRD) Program." I now recognize myself for five minutes for an opening statement.

I want to welcome everyone here today. The topic of this morning's hearing, "A Review of the Networking and Information Technology Research and Development Program", is important to our national security, global competitiveness, and technological innovation. This hearing will provide us with an updated overview of the program, and it will discuss the recent President's Council of Advisors on Science and Technology report, also known as the PCAST report, on the NITRD Program published in August of 2015.

The NITRD Program was originally authorized in 1991 in the High Performance Computing Act. It provides the primary mechanism by which the federal government coordinates this nation's almost $4 billion of research and development on advanced information technologies in computing, networking, and software. Agencies who participate in the program include DHS, NASA, NIH, NIST, EPA, and the Department of Energy.

Information technology is all around us in our day-to-day lives: on our smartphones, in our cars, and in our kitchens. It improves our way of life, even in ways that are not always as visible to us. As noted in the PCAST report, "information technology empowers scientific inquiry, space and Earth exploration, teaching and learning, consumer buying and selling, informed decision-making, national security, transportation, and advanced manufacturing."

R&D in information technology provides a greater understanding of how to protect essential systems and networks that support fundamental sectors of our economy, from emergency communications and power grids to air-traffic control networks and national defense systems. This kind of R&D works to prevent or minimize disruptions to critical information infrastructure, to protect public and private services, to detect and respond to threats while mitigating the severity of and assisting in the recovery from those threats in an effort to support a more stable and secure nation.

As technology rapidly advances, the need for research and development continues to evolve. NITRD works to prevent duplicative and overlapping R&D efforts, thereby enabling more efficient use of government resources and taxpayer dollars.

Executive Order 13539 assigned the President's Council of Advisors on Science and Technology, or PCAST, to periodically review the NITRD Program. PCAST's most recent assessment, which was published this past August, includes a number of recommendations. Those recommendations focus on eight specific R&D areas including, but not limited to: cybersecurity, IT and health, big data and data-intensive computing, and foundational computing research.

Considering the significant increase in global interconnectedness enabled by the internet, and with it, increased cybersecurity attacks, I was glad to see that the PCAST report included rec-

ommendations of how to improve the foundations of our cybersecurity.For example, one recommendation included in the report calls on the National Science Foundation to sponsor broad foundational research on methods to facilitate end-to-end construction of trustworthy systems, particularly for emerging application domains, and on ways to anticipate and defend against attacks.

I look forward to today's hearing, and I hope we are able to learn more about the current status of the NITRD Program and how we can continue improving the program. I am also looking forward to learning how industry is engaged in this program. As noted in the PCAST report, "today's advances rest on a strong base of research and development created over many years of government and private investment. Because of these investments, the United States has a vibrant academia-industry-government ecosystem to support research and innovation in IT and to bring the results into practical use."

It is clear that focusing our investments on information technology research and development is important to our nation for a variety of reasons, including economic prosperity, national security, competitiveness, and quality of life.

[The prepared statement of Chairwoman Comstock follows:]

Statement of Research Subcommittee Chairwoman Barbara Comstock

Hearing on "A Review of the Networking and Information Technology Research and Development (NITRD) Program"
Introductory Statement
10:00 a.m. on Wednesday, October 28, 2015

Good morning. I want to welcome everyone here today. The topic of this morning's hearing, *A Review of the Networking and Information Technology Research and Development Program,* is important to our national security, global competitiveness and technological innovation. This hearing will provide us with an updated overview of the program, and it will discuss the recent President's Council of Advisors on Science and Technology's report, also known as the PCAST report, on the NITRD program published in August 2015.

The Networking and Information Technology Research and Development program, or NITRD, was originally authorized in 1991 in the High Performance Computing Act.

NITRD provides the primary mechanism by which the federal government coordinates this nation's almost 4 billion dollars of research and development on advanced information technologies in computing, networking, and software. Agencies who participate in the program include DHS, NASA, NIH, NIST, EPA, and the Department of Energy.

Information technology is all around us in our day to day lives – on our smart phones, in our cars, and in our kitchens. It improves our way of life, even in ways that are not always as visible to us. As noted in the PCAST report, "information technology empowers scientific

inquiry, space and Earth exploration, teaching and learning, consumer buying and selling, informed decision-making, national security, transportation, [and] advanced manufacturing."[1]

R&D in information technology provides a greater understanding of how to protect essential systems and networks that support fundamental sectors of our economy, from emergency communications and power grids to air-traffic control networks and national defense systems. This kind of R&D works to prevent or minimize disruptions to critical information infrastructure, to protect public and private services, to detect and respond to threats while mitigating the severity of and assisting in the recovery from those threats, in an effort to support a more stable and secure nation.

As technology rapidly advances, the need for research and development continues to evolve. NITRD works to prevent duplicative and overlapping R&D efforts, thereby enabling more efficient use of government resources and taxpayer dollars.

Executive Order 13539 assigned the President's Council of Advisors on Science and Technology, or "PCAST" to periodically review the NITRD program. PCAST's most recent assessment, which was published this past August, includes a number of recommendations. Those recommendations focus on eight specific R&D areas including, but not limited to: cybersecurity, IT and health, big data and data-intensive computing, and foundational computing research.

[1] "Ensuring Leadership in Federally Funded Research and Development in Information Technology," President's Council of Advisors on Science and Technology, August 2015, available at: https://www.whitehouse.gov/sites/default/files/microsites/ostp/PCAST/nitrd_report_aug_2015.pdf

Considering the significant increase in global interconnectedness enabled by the Internet, and with it, increased cybersecurity attacks, I was glad to see that the PCAST report included recommendations of how to improve the foundations of our cybersecurity.

For example, one recommendation included in the report calls on the National Science Foundation to sponsor broad foundational research on methods to facilitate end-to-end construction of trustworthy systems, particularly for emerging application domains, and on ways to anticipate and defend against attacks.

I am excited for today's hearing, and I hope we are able to learn more about the current status of the NITRD program and how we can continue improving the program in order to promote continued technological leadership in the United States. I am also looking forward to learning how industry is engaged in the NITRD program. As noted in the PCAST report, "today's advances rest on a strong base of research and development (R&D) created over many years of government and private investment. Because of these investments, the United States has a vibrant academia-industry-government ecosystem to support research and innovation in IT and to bring the results into practical use."[2]

It is clear that focusing our investments on information technology research and development is important to our nation for a variety of reasons, including economic prosperity, national security, U.S. competitiveness, and quality of life. I look forward to hearing from each of our witnesses on this important topic. Thank you for being here.

---

[2] Ibid.

Chairwoman COMSTOCK. And now I thank all witnesses for being here, and I will turn over the microphone and recognize my Ranking Member, the gentleman from Illinois, Mr. Lipinski, for his opening statement.

Mr. LIPINSKI. Thank you, Chairwoman Comstock. Thank you and Chairman Smith for holding this hearing.

I am certainly pleased that we're once again planning to take up reauthorization legislation for the Networking and Information Technology R&D Program known as NITRD. The House, through this committee, has successfully passed a bipartisan reauthorization of the program in each of the past three Congresses, and each time the Senate has failed to follow suit. If we are going to move a bill to the President's desk, each of us in this room will need to work harder on the necessary outreach to gather support. It's been too long since the original High-Performance Computing Act of 1991 has been updated with the current state of science and technology in the field, as well as the current operational and management needs of the program.

Networking and information technology is changing more rapidly than any of us could have dreamed in 1991. Mosaic, the World Wide Web browser that first made the internet user-friendly, was created at the National Center for Supercomputing Applications at the University Of Illinois in 1993 under a project funded thanks in large part to the HPC Act. Netscape founder Marc Andreessen, who was a leader of the Illinois team before launching his company, was quoted as saying, "if it had been left to private industry, it wouldn't have happened, at least not until years later." Dr. Andreessen's statement is as relevant today as ever. Without question, the 1991 Act set the stage for a coordinated federal R&D strategy that has underpinned the U.S. leadership in NIT for the past 25 years.

One reason, I believe, that we are having trouble getting an update through the Senate is that the private sector has not weighed in on the importance of NITRD. I understand that in the process of planning this hearing there was some difficulty identifying experts in industry at sufficiently high level with knowledge of the NITRD Program. Even the experts that were consulted had a hard time coming up with more names to reach out to. Given that federal investments in stet have applications across all sectors of our economy and at the ground level, NITRD involves many public-private partnerships, I find this troubling that we have not been able to get the private sector engaged here.

The NITRD Program is a $4 billion investment covering every aspect of networking and information technology R&D, in addition to the computing infrastructure required to support R&D in every field of science and engineering. Four billion dollars is a large sum by any measure. However, NITRD covers so many areas of R&D, as the Chairwoman noted, and includes so much expensive but essential infrastructure, I fear we may be under-investing in many critical areas such as cybersecurity.

I want to thank the witnesses for submitting detailed written testimony, and I will highlight just a few topics that I hope we can discuss this morning. In his testimony, Dr. Seidel, the current Director of NCSA, discusses the need for more coherence and coordi-

nation around computing research infrastructure. When we talk about computing research infrastructure, we mean not just high-performance computing facilities such as Blue Waters, but also big data infrastructure, networking testbeds, observation systems, and more. I'd like to understand better how infrastructure is planned, coordinated, and categorized under the NITRD Program, and how the new National Strategic Computing Initiative fits in.

On the topic of education and workforce, we have heard from countless experts that our IT workforce pipeline is not keeping up with the demand. When it comes to education and training, the federal role may be small compared to the state and private sector's. However, PCAST made some specific recommendations for federal agencies that we may be able to take up in the NITRD legislation, so I hope we have the opportunity to discuss those recommendations further.

I look forward to hearing from this morning's expert panel. And with that, I yield back.

[The prepared statement of Mr. Lipinski follows:]

Opening Statement

Rep. Daniel Lipinski (D-IL)
Ranking Member
Subcommittee on Research & Technology
House Committee on Science, Space, and Technology

Committee Hearing:
Review of the Networking and Information Technology R&D (NITRD) Program

October 28, 2015

Thank you Chairwoman Comstock for holding this hearing. I am certainly pleased that we are once again planning to take up reauthorization legislation for the Networking and Information Technology R&D Program – NITRD. The House, through this Committee, has successfully passed a bipartisan reauthorization of the program in each of the past 3 congresses and each time the Senate has failed to follow suit. If we are going to move a bill to the President's desk, each of us in this room will need to work harder on the necessary outreach to gather support. It's been too long since the original High Performance Computing Act of 1991 has been updated with the current state of science and technology in the field, as well as the current operational and management needs of the Program.

Networking and information technology is changing more rapidly than any of us could have dreamed in 1991. Mosaic, the World Wide Web browser that first made the Internet user-friendly, was created at the National Center for Supercomputing Applications at the University of Illinois in 1993, under a project funded thanks in large part to the HPC Act. Netscape founder Marc Andreeson, who was a leader of the Illinois team before launching his company, was quoted as saying, "If it had been left to private industry, it wouldn't have happened, at least, not until years later." Dr. Andreeson's statement is as relevant today as ever. Without question, the

1991 Act set the stage for a coordinated federal R&D strategy that has underpinned U.S. leadership in NIT for the past 25 years.

One reason, I believe, that we have had trouble getting an update through the Senate is that the private sector has not weighed in on the importance of NITRD. I understand that in the process of planning this hearing, there was some difficulty identifying experts in industry at a sufficiently high level with knowledge of the NITRD program. Even the experts that were consulted had a hard time coming up with more names to reach out to. Given that federal investments in NIT R&D have applications across all sectors of our economy, and that at the ground level, NITRD involves many public-private partnerships, I find this troubling.

The NITRD Program is a $4 billion investment covering every aspect of networking and information technology R&D, in addition to the computing infrastructure required to support R&D in every field of science and engineering. $4 billion is a large sum by any measure. However, NITRD covers so many areas of R&D and includes so much expensive but essential infrastructure, I fear we may be underinvesting in many critical areas such as cybersecurity.

I want to thank the witnesses for submitting detailed written testimony, and I will highlight just a few topics that I hope we can discuss this morning. In his testimony, Dr. Seidel, the current director of NCSA, discusses the need for more coherence and coordination around computing research infrastructure. When we talk about computing research infrastructure, we mean not just high-performance computing facilities such as Blue Waters, but also big data infrastructure, networking testbeds, observation systems, and more. I'd like to understand better how infrastructure is planned, coordinated, and categorized under the NITRD program, and how the new National Strategic Computing Initiative fits in.

On the topic of education and workforce, we have heard from countless experts that our IT workforce pipeline is not keeping up with the demand. When it comes to education and training, the federal role may be small compared to the state and private sector roles. However, PCAST made some specific recommendations for federal agencies that we may be able to take up in NITRD legislation, so I hope we have the opportunity to discuss those recommendations further.

I look forward to hearing from this morning's expert panel.

Chairwoman COMSTOCK. Thank you, Mr. Lipinski.

I now recognize the Chairman of the full Committee, Mr. Smith.

Chairman SMITH. Thank you, Madam Chair. And let me say that I appreciate both your and the Ranking Member's thoughtful comments today.

Madam Chair, the Networking and Information Technology Research and Development program that we review today, otherwise known as NITRD, oversees federal investment in fundamental research areas such as supercomputing, cybersecurity, big data, and cyber-physical systems.

These research priorities help spur technologies that protect our country and grow our economy. For example, a cybersecurity attack is one of the greatest security challenges that America faces today. It threatens all of our federal agencies and even our private computer systems. This is just one area of federal R&D that the NITRD Program addresses.

In the digital age, threats to our country's computer networking systems constantly evolve. We must effectively coordinate R&D efforts in order to protect and improve cyber and data security nationwide. Better network security promotes U.S. competitiveness, enhances national security, and creates high-tech jobs.

In fact, the most recent President's Council of Advisors on Science and Technology report predicts that more than half of all new science, technology, engineering, and mathematics jobs will be related to information technology.

A healthy and viable workforce, literate in all STEM subjects including computer science, is critical to American industries. Today, a variety of jobs in industries from banking to engineering to medicine require a familiarity with computer science. According to the Bureau of Labor Statistics, computing and mathematics will be one of the top ten fastest-growing major occupational groups from 2010 to 2020, with a growth rate of four percent annually compared to one percent for all other industries.

Encouraging innovation and technological advancements is a priority of the Science Committee and is important to high-tech communities across our country, including those in my district.

The NITRD program focuses on research and development of new technologies that create more high-tech jobs in STEM fields. Technological innovation is what drives America's economy and success. Since the invention of the world's first supercomputer 50 years ago, the United States has held a competitive advantage in the field of supercomputing.

In fact, in Austin, Texas, we have seen great achievements in supercomputing. The Stampede supercomputer at the Texas Advanced Computing Center at the University of Texas in Austin is the number one open-access supercomputer in the country. Stampede will be used by more than 1,000 scientists from the United States and around the world to solve problems that affect our daily lives. This is a tremendous accomplishment not only for the innovators at the University of Texas in Austin but also for all Americans.

But to maintain this competitive advantage, we must continue to support the fundamental research and development that encour-

ages innovation, particularly the creation and design of supercomputers and the applications those computers support.

It has been two years since this Committee last reviewed the NITRD Program and passed our Committee's bill to reauthorize the program. The Advanced—the Advancing America's Networking and Information Technology Research and Development Act of 2013 provided for the coordinated R&D efforts necessary to improve cyber and data security nationwide. Our legislation also authorized the participating agencies to support large-scale, long-term, interdisciplinary research. Unfortunately, that legislation stalled in the Senate.

I want to thank our witnesses today for testifying on the NITRD program and appreciate their testimony on the current state of the program, recommendations for how to improve the program, and future R&D priorities.

And I will yield back. Thank you.

[The prepared statement of Chairman Smith follows:]

Statement of Science Committee Chairman Lamar Smith
Research and Technology Subcommittee Hearing on
A Review of the Networking and Information Technology Research and Development (NITRD) Program
10:00 a.m. Wednesday, October 28, 2015

Good morning. The Networking and Information Technology Research and Development program that we review today – otherwise known as NITRD oversees federal investment in fundamental research areas such as supercomputing, cybersecurity, big data, and cyber physical systems.

These research priorities help spur technologies that protect our country and grow our economy.

For example, a cybersecurity attack is one of the greatest security challenges that America faces today. It threatens all of our federal agencies and even our private computer systems. This is just one area of federal R&D that the NITRD program addresses.

In the digital age, threats to our country's computer networking systems constantly evolve. We must effectively coordinate R&D efforts in order to protect and improve cyber and data security nationwide. Better network security promotes U.S. competitiveness, enhances national security and creates high-tech jobs.

In fact, the most recent President's Council of Advisors on Science and Technology report predicts that more than half of all new science, technology, engineering, and mathematics jobs will be related to information technology.

A healthy and viable workforce, literate in all STEM subjects including computer science, is critical to American industries. Today, a variety of jobs in industries from banking to engineering to medicine require a familiarity with computer science.

According to the Bureau of Labor Statistics, Computing and Mathematics will be one of the top ten fastest growing major occupational groups from 2010 to 2020, with a growth rate of four percent annually compared to one percent for all other industries.

Encouraging innovation and technological advancements is a priority of the Science Committee and is important to high-tech communities across our country, including those in my district.

The NITRD program focuses on research and development of new technologies that create more high-tech jobs in STEM fields. Technological innovation is what drives America's economy and success.

Since the invention of the world's first supercomputer 50 years ago, the United States has held a competitive advantage in the field of supercomputing.

In fact, in Austin, Texas, we have seen great achievements in supercomputing. The Stampede supercomputer at the Texas Advanced Computing Center at the University of Texas in Austin is the number one open access supercomputer in the country.

Stampede will be used by more than 1,000 scientists from the United States and around the world to solve problems that affect our daily

lives. This is a tremendous accomplishment not only for the innovators at the University of Texas in Austin but also for all Americans.

But to maintain this competitive advantage, we must continue to support the fundamental research and development that encourages innovation, particularly the creation and design of supercomputers and the applications those computers support.

It has been two years since this Committee last reviewed the NITRD program and passed our Committee's bill to reauthorize the program.

The Advancing America's Networking and Information Technology Research and Development Act of 2013 provided for the coordinated R&D efforts necessary to improve cyber and data security nationwide.

Our legislation also authorized the participating agencies to support large-scale, long-term, interdisciplinary research.

Unfortunately, that legislation stalled in the Senate.

I thank our witnesses today for testifying on the NITRD program. I look forward to their testimony on the current state of the program, recommendations for how to improve the program, and future R&D priorities.

###

Chairwoman COMSTOCK. Thank you, Mr. Smith.

I now recognize the Ranking Member of the Full Committee for a statement, Ms. Johnson.

Ms. JOHNSON. Thank you very much. I want to thank you, Chairwoman Comstock, for holding this important hearing.

The Science, Space, and Technology Committee played a central role in the development of the High-Performance Computing Act of 1991, the bill that set the stage for 25 years of scientific and technological progress under the Networking and Information Technology Research and Development, or NITRD.

Advances in networking and information technology are a key driver of our economy, our national security, and our well-being. NITRD contributes to increased productivity in existing industries and opens the door for information of new ones. We've all heard how Google grew out of a basic research project funded by the National Science Foundation. NITRD protects our brave men and women in the military by improving intelligence gathering and sharing and providing them with more effective and safer equipment. NITRD has improved healthcare and saved countless lives by contributing to advanced diagnostic and surgical tools, distance medicine, and improved medical research.

NIT is truly pervasive in our society. Even those of us who lived most of our lives before the advent of wireless technology don't know how we would live today without the devices we carry around in our pockets.

In their 2015 review of the NITRD Program, the President's Council of Advisors on Science and Technology, PCAST, expressed concern that researchers today face difficulty getting funded for riskier, more speculative long-term investigations. According to the PCAST report, funding pressures are pushing scientists to choose more short-term problem-solving research. I worry deeply about the impact of that and declining budgets across our science and technology enterprise. I hope that any budget deal being worked out now and in the future will allow for increased investments in all fields of science and engineering. That was just one of many recommendations from PCAST and other experts.

Today's hearing is an important opportunity for committee members to hear from experts about key issues in NITRD reauthorization. Our committee has tried several times to update and reauthorize NITRD legislation so that it continues to push the boundaries of information technology, science and technology, and maximizes opportunities for coordination, collaboration, and strategic planning among the many NITRD member agencies.

I look forward to working with my colleagues on both sides of the aisle to develop a good bill and move it through the House. Perhaps we will have more success this time around in the Senate.

And I want to thank the excellent panel for being here today, and I yield back.

[The prepared statement of Ms. Johnson follows:]

Research & Technology Subcommittee Hearing

Review of the Networking and Information Technology R&D Program

October 28, 2015

Opening Statement of Ranking Member Johnson

I want to thank Chairwoman Comstock for holding this important hearing. The Science, Space, and Technology Committee played a central role in the development of the *High Performance Computing Act of 1991,* the bill that set the stage for 25 years of scientific and technological progress under the Networking and Information Technology Research and Development, or NITRD, Program.

Advances in networking and information technology are a key driver of our economy, our national security, and our wellbeing. NIT R&D contributes to increased productivity in existing industries and opens the door for the formation of new ones. We've all heard how Google grew out of a basic research project funded by the National Science Foundation. NIT R&D protects our brave men and women in the military by improving intelligence gathering and sharing and providing them with more effective and safer equipment. NIT R&D has improved health care and saved countless lives by contributing to advanced diagnostic and surgical tools, distance medicine, and improved medical research.

NIT is truly pervasive in our society. Even those of us who lived most of our lives before the advent of wireless technology don't know how we would live today without the devices we carry around in our pockets.

In their 2015 review of the NITRD Program, the President's Council of Advisors on Science and Technology, or PCAST, expressed concern that researchers today face difficulty getting funded for riskier, more speculative long-term investigations. According to the PCAST report, funding pressures are pushing scientists to choose more short-term, problem-solving research. I worry deeply about the impact of flat and declining budgets across our science and technology enterprise. I hope that any budget deal being worked out now, and in the future, will allow for increased investments in all fields of science and engineering.

That was just one of many recommendations from PCAST and other experts. Today's hearing is an important opportunity for Committee Members to hear from the experts about key issues for NITRD reauthorization. Our Committee has tried several times to update and reauthorize the NITRD legislation so that it continues to push the boundaries of information technology science and technology and maximizes opportunities for coordination, collaboration, and strategic planning among the many NITRD member agencies. I look forward to working with my

colleagues on both sides of the aisle to develop a good bill and move it through the House. Perhaps we will have more success this time around in the Senate.

I thank the excellent panel for being here today. I yield back.

Chairwoman COMSTOCK. Thank you, Ms. Johnson.

Now, let me introduce our witnesses. Our first witness today is Dr. Keith Marzullo. Dr. Marzullo currently serves as the Director of the Federal Networking and Information Technology Research and Development National Coordination Office. He also serves as the Co-Chair of NITRD Subcommittee of the National Science and Technology Council Committee on Technology, where he oversees the operations and activities of the NITRD program.

Dr. Marzullo earned his bachelor's degree in physics at Occidental College, his master's degree in applied physics at Stanford University, and received his Ph.D. in electrical engineering from Stanford University, where he developed the Xerox Research Internet Clock Synchronization protocol, one of the first practical fault-tolerant protocols for keeping widely distributed clocks synchronized with each other. Wow.

Dr. Gregory Hager is the Mandell Bellmore Professor of Computer Science at Johns Hopkins University. He joined the Department of Computer Science at Johns Hopkins in 1999 and has served as the Deputy Director of the NSF Engineering Research Center for Surgical Systems and Technology, and as Chair of Computer Science from 2010 to 2015.

Dr. Hager earned his bachelor's degree in mathematics and computer science at Luther College, and his master's degree and Ph.D. in computer science at the University of Pennsylvania.

Dr. Edward Seidel, our third and final witness, is the Director of the National Center for Supercomputing Applications. In addition to leading the National Center for Supercomputing Applications, he is a founder Professor in the University of Illinois Department of Physics and a Professor in the Department of Astronomy.

Dr. Seidel earned his bachelor's in mathematics and physics at the College of William and Mary, his master's degree in physics at the University of Pennsylvania, and his doctorate in relativistic astrophysics at Yale University.

I now recognize Dr. Marzullo for five minutes to present his testimony.

TESTIMONY OF DR. KEITH MARZULLO, DIRECTOR, NATIONAL COORDINATION OFFICE, THE NETWORKING AND INFORMATION TECHNOLOGY RESEARCH AND DEVELOPMENT PROGRAM

Dr. MARZULLO. Thank you and good morning. I would like to express my appreciation to Chairwoman Comstock, Ranking Member Lipinski, Chair Smith, and Ranking Member Johnson, and the whole committee for this opportunity to come before you today to discuss the Networking and Information Technology Research and Development Program, the National Coordination Office, and this year's review of the NITRD Program by the President's Council of Advisors on Science and Technology. I will use the corresponding acronyms—NITRD, NCO, and PCAST—throughout the rest of my comments in the interest of brevity.

The NITRD Program provides for the coordination of research and development in networking and information technology across 21 federal agencies and many other partners, which collectively represent the federal government's primary investments in re-

search and development for IT-related technologies. The NCO supports coordination activities of the NITRD Program.

In my oral comments today, I would like to talk a bit about current and future research directions. NITRD currently focuses on several areas, including big data; cloud computing; cybersecurity; Internet of Things; health IT; high-end computing; software-defined networking; and the social, economic, and workforce implications of IT and IT workforce development.

My written testimony gives several examples of recent accomplishments by NITRD groups, including strategic plans, interagency solicitations, and joint workshops, and how they promoted R&D in their related research areas.

Looking forward, the recommendations of PCAST identified a key set of R&D areas that with sustained support from Congress and across agencies will lead to significant progress in addressing national priorities. Some of the suggested R&D areas like cybersecurity have been important for some time and still critically need cross-agency coordination.

There are three areas that PCAST identified, though, that I'd like to call out: first, big data and data-intensive computing. We recognized some time ago that scientific breakthroughs are increasingly powered by advanced computing capabilities that help researchers manipulate and explore massive data sets. Breakthroughs are now possible in education; city and community services; healthcare; and disaster preparedness prevention, response, and recovery.

However, big data raises important issues with respect to storage and curation, as well as to privacy. A continued cross-agency focus will accelerate our progress, advancing both the foundations and applications of data science and engineering.

Second: high-capacity computing for discovery, security, and commerce. Here, I would like to note the National Strategic Computing Initiative established by executive order earlier this year. Previous investments in high-performance computing have contributed substantially to national economic prosperity and have rapidly accelerated scientific discovery, but the path for continued progress is steep. We need fundamentally new approaches.

Delivering exascale computing presents hard technical challenges and further progress will require us to overcome the physical limitations imposed by current semiconductor technology. Addressing these challenges requires a whole-government approach in which NITRD is positioned to play a key coordinating role.

Third: cyber human systems. The role of people in networking and information technology and vice versa are both increasingly important. Robotics is moving from closed environments like factory floors to open environments like people's homes. The devices that communicate with each other in the Internet of Things are increasingly doing so as part of systems that fundamentally involve people, such as in automobile traffic management, environmental monitoring, and aging-in-place support. Cross-agency collaboration is required to make progress in computing-enabled human interaction, communication, and augmentation that can enhance human capabilities and improve learning, education, and training in all fields.

Let me close by noting that for decades the investments of the federal government in basic IT research have helped the nation make good progress on grand-challenge problems and address national priorities. Basic IT research has led to significant innovations, to new startups and small businesses, to birth of entirely new industries, and sometimes to disruptive technological change. The NITRD Program is completely involved in this exciting and rapidly changing research and innovation ecosystem through the program's mechanisms that facilitate interagency coordination and collaboration on federally funded research and development activities.

I thank you for your interest in the NITRD Program and the opportunity to appear before you today. The NITRD community looks forward to working with you to further the value of interagency cooperation in Networking and Information Technology Research and Development.

[The prepared statement of Dr. Marzullo follows:]

Statement of Dr. Keith Marzullo
Director, National Coordination Office for the
Networking and Information Technology Research and Development Program,
to the Subcommittee on Research and Technology of the
Committee on Science, Space, and Technology
U.S. House of Representatives
October 28, 2015

Good morning. My name is Keith Marzullo and I am the Director of the National Coordination Office (NCO) for the Networking and Information Technology Research and Development (NITRD) Program. With my colleague, Dr. James F. Kurose of the National Science Foundation (NSF), I co-chair the NITRD Subcommittee of the National Science and Technology Council (NSTC) Committee on Technology (CoT). I want to thank Chairwoman Comstock, Ranking Member Lipinski, and members of the Subcommittee for the opportunity to come before you today to talk about the role of the NITRD Program in federally funded research and development (R&D) in advanced networking and information technology (IT). I also look forward to discussing the recent review of the NITRD Program by the President's Council of Advisors on Science and Technology (PCAST).

I became Director of the NCO for NITRD in June 2015, and was at the National Science Foundation (NSF) prior to that for five years, as well as previously a professor and department chair of Computer Science and Engineering at the University of California San Diego. While at NSF, I directed the Division of Computer and Network Systems in the Directorate of Computer and Information Science and Engineering (CISE). Also while at NSF, I had the privilege of co-chairing two NITRD Senior Steering Groups, one of which focused on R&D in cybersecurity and the other on cyber-physical systems. I bring these experiences to my current position, which has shaped my enthusiasm for the great work being done by the NCO and the NITRD Program.

The NITRD Program

Authorities and Purpose: The NITRD Program is now in its 25th year, having been authorized by the High Performance Computing Act of 1991 (Public Law 102-194), which established the Program, and set forth a framework that combined research goals with specific provisions for interagency cooperation, collaboration, and partnerships with academia and industry. Two additional acts – the Next Generation Internet Research Act of 1998 (Public Law 105-305) and the America COMPETES Act of 2007 (Public Law 110-69) – reauthorized the Program and extended its scope in various ways.

The NITRD Program provides for coordination across the Government's portfolio of unclassified investments in fundamental, long-term R&D in advanced information technologies in computing, networking, and software. NITRD research supports both the missions of our Federal agencies and the Nation's broader goals to accelerate the development and deployment of advanced information technologies for science, engineering, national defense, homeland security, the U.S. economy, our environment, and the health, education, and quality of life of the American people.

NITRD Agencies: NITRD member agencies are Federal agencies that conduct or support R&D in advanced networking and information technologies, report their IT research budgets in the NITRD crosscut, and provide support for the NCO. NITRD participating agencies are Federal agencies that participate in NITRD activities and have mission interests that involve applications or R&D in advanced networking and information technologies. I am pleased to report that membership continues to grow and now stands at 21 member agencies with the recent addition of the National Institute of Justice. Appendix A lists NITRD member and participating agencies.

Budget Requests and Reporting: Annually, the NCO produces the NITRD Supplement to the President's Budget,[1] which is delivered to the Congress as part of the President's budget request. The Supplement provides a budget crosscut by agency and by NITRD Program Component Area (PCA). The PCAs are the major subject areas under which related projects and activities carried out under the NITRD Program are grouped. In support of the budget request, the Supplement provides information about the strategic priorities, highlights, plans, and activities that agencies plan to coordinate under the PCA in the upcoming fiscal year.

Agencies currently coordinate their NITRD research activities and plans in eight PCAs. The current PCAs are:

- Cybersecurity and Information Assurance (CSIA)
- High Confidence Software and Systems (HCSS)
- High End Computing Infrastructure and Applications (HEC I&A)
- High End Computing Research and Development (HEC R&D)
- Human Computer Interaction and Information Management (HCI&IM)
- Large Scale Networking (LSN)
- Social, Economic, and Workforce Implications of IT and IT Workforce Development (SEW)
- Software Design and Productivity (SDP)

This PCA structure has hardly changed over the last 15 years. In response to the 2015 PCAST recommendations, the NCO is currently coordinating with NITRD member agencies in a process to modernize the PCAs. (See the section on the 2015 PCAST Review on page 8.)

NITRD Coordination and Working Groups: As noted previously, agencies coordinate their NITRD research activities and plans in PCAs. For each PCA, agency representatives meet in an Interagency Working Group (IWG) or a Coordinating Group (CG) to exchange information and collaborate on research plans and activities such as testbeds, workshops, and joint solicitations. Such activities enable agencies to coordinate and focus their R&D resources on important, shared problems and common goals.

The NITRD coordinating structure also includes Senior Steering Groups (SSGs) to focus on emerging science and technology priorities. The SSGs enable senior-level individuals who have the authority to affect or shape the R&D directions of their organizations to collaborate on

[1] For the FY 2016 budget request, see *The Networking and Information Technology Research and Development Program Supplement to the President's Budget – FY 2016*, February 2015, National Science and Technology Council: https://www.nitrd.gov/pubs/2016supplement/FY2016NITRDSupplement.pdf.

developing effective R&D strategies for national-level IT challenges. The NITRD Program also supports Communities of Practice (CoPs) that function as forums to enhance R&D collaboration and promote the adoption of advanced IT capabilities developed by government-sponsored IT research. Collectively, we refer to the NITRD IWGs, CGs, SSGs, CoPs, and their sub-teams as the NITRD Working Groups. Appendix B lists the NITRD Working Groups.

Overall NITRD Program coordination is carried out by the Subcommittee on Networking and Information Technology Research and Development, under the aegis of the Committee on Technology (CoT) of the National Science and Technology Council (NSTC). The NITRD Subcommittee convenes three times a year and the NITRD Working Groups each meet approximately 12 times annually. In my role as co-chair of the NITRD Subcommittee, I keep in contact with NITRD agency representatives on NITRD matters and chair the Subcommittee meetings with my colleague and the Subcommittee's other co-chair, Dr. James F. Kurose, NSF Assistant Director for Computer and Information Science and Engineering.

I note that, in addition to responding to the PCAST's recommendations to modernize the PCAs, the NCO is also taking up PCAST's recommendations on the NITRD groups. (See the section on the 2015 PCAST Review on page 8.)

National Coordination Office: The NCO was first established in September 1992 and was initially called the National Coordination Office for High Performance Computing and Communications (NCO/HPCC). Its name has changed several times over the years; as of July 2005, it is referred to as the National Coordination Office for Networking and Information Technology Research and Development (NCO/NITRD).

The NCO provides overall support for the planning, coordination, budget, and assessment activities of the NITRD Program, including the work of the NITRD Subcommittee, and its working groups. The NCO serves as the focal point for the NITRD Program and the source of timely, high-quality, technically accurate, in-depth information on IT R&D accomplishments, new directions, and critical challenges that IT leaders, policy makers, and the public can use to maximize social and economic benefits.

The NCO, in cooperation with OSTP, OMB, the NITRD agencies and working groups, prepares, publishes, and disseminates the annual NITRD Supplement to the President's Budget, Federal networking and IT R&D plans, and IT research needs reports.

The NCO provides technical subject matter expertise for each of the NITRD Working Groups, as well as managerial, logistical, IT, and administrative support of the interagency meetings, workshops, and conferences. Regular day-to-day NCO activities include responding to inquiries and requests for information about the Program and doing outreach through web-based social media. The NCO Director maintains close communications with OSTP, OMB, and the NITRD agencies, and represents the Program in presentations to organizations both nationally and internationally.

Benefits of the NITRD Program

For decades, the investments of the Federal Government in basic IT research have helped the Nation make good progress on difficult, grand challenge problems and address national priorities. Some basic IT research has led to significant innovations, to new start-ups and small businesses, the birth of entirely new industries, and sometimes to disruptive technological change. Notable successes of "translating research into practice" have helped spur economic growth and improve American competitiveness across the global economy. One often-cited example of basic IT research paying off extraordinary dividends to the economy and society is the evolution of DARPA's ARPANET to NSF's NSFNET and then to the commercial Internet.[2] There are many other examples that demonstrate the multiplier effect of federally funded research in creating economic opportunities.

The NITRD Program is completely involved in this exciting and rapidly changing research and innovation ecosystem due, in large part, to the Program's mechanisms that facilitate interagency coordination and collaboration on federally funded research activities. These mechanisms include:

- Regular meetings of the NITRD Working Groups
- Formal reports, including the annual NITRD Supplement to the President's Budget and strategic planning documents
- Workshops and events, with participants from government, academia, and industry
- Support for interagency collaborations, such as joint research solicitations and testbeds
- Contributions to the research and innovation ecosystem
- Outreach to Federal agencies, academia, industry, and the public

I will illustrate these with some examples and highlights.

Meetings: The regular meetings of the NITRD Working Groups enable information sharing and awareness. Information sharing is a fundamentally important practical benefit of participating in the Program. Being aware of the programs and activities of other agencies enables participants to work better together, build on their respective strengths, and avoid duplication of effort. Over the course of 2014, the NCO supported nearly 250 meetings, including regularly scheduled and ad-hoc gatherings. Additionally, many of the Working Groups hold Annual Planning Meetings (APMs) to share agency program information and plans for the upcoming year, and to coordinate strategic priorities for the PCAs.

We believe that agencies see the NCO as both an effective, neutral convener that fosters interagency dialogue and as a steady, experienced partner that can incubate cross-agency efforts to coordinate emerging IT R&D interests. For example, the agencies in the Video and Imaging

[2] For examples, the Committee may wish to refer to the National Research Council's "tire tracks" chart and study. In 2003, the National Research Council's Computer Science and Telecommunications Board (CSTB) updated the original 1995 tire tracks figure from the *Evolving the High Performance Computing and Communications* report in a new report, *Innovation in Information Technology*, which summarized eight prior CSTB studies on the subject. See also the examples of companies created from Federal agency-funded research in the 2013 report of the Science Coalition, *Sparking Economic Growth 2.0: Companies Created from Federally Funded University Research, Fueling American Innovation and Economic Growth.*

Analytics (VIA) Coordination Group came to the NCO and asked it to help transition their ad-hoc, grassroots effort, formed in the aftermath of the 2013 Boston Marathon attacks, to a sustainable entity that could support their coordination of R&D on video and imaging analytics of the visible world. The VIA CG joined the NITRD Program last year.

Reports and Strategic Plans: The NCO supports the NITRD Program in a number of strategic planning and coordination activities. The development and release of the 2011 Cybersecurity R&D Strategic Plan is one exemplar of that process.[3] A notable aspect of the 2011 strategy was that it broadened the research focus in an important way: instead of focusing solely on technology, it called for the development of effective incentives, affecting both individuals and organizations, to make cybersecurity ubiquitous. Such incentives can involve market-based, legal, regulatory, or institutional interventions. Developing such incentives requires advances in understanding the motivations and vulnerabilities of both markets and humans, and how these factors affect and interact with technical systems. This Plan has had a number of impacts in the R&D community, which I will highlight later, and continues to be relevant to the strategic planning process today. In fact, earlier this year the NITRD CSIA R&D SSG issued a Request for Information (RFI) to solicit feedback on the 2011 plan and inputs for updating the strategy. The SSG is currently developing an updated strategic plan that incorporates the RFI comments and responds to the Cybersecurity Enhancement Act of 2014 (Public Law 113-274).

Two additional important strategic planning efforts are underway. One is on privacy R&D and the other is on Big Data R&D. The privacy effort is being led by the CSIA R&D SSG to help address concerns about the evolving impacts of IT on privacy, as detailed in recent White House and PCAST reports.[4] The Big Data effort is a follow-on activity of the Big Data SSG's leadership in the national Big Data R&D Initiative (launched in March 2012) and has goals to advance R&D in Big Data technologies and applications and grow the field of data science.

Workshops: The NCO supports and conducts workshops as a proven tool for convening and engaging stakeholders in dialogue on critically important topics and issues. Workshops also provide the intellectual time and space for participants to work out approaches and solutions to problems. In addition to these benefits, the workshop materials and resulting reports serve as important artifacts for the participants and the broader community to reference long after the event is over. I'd like to highlight three NITRD areas in which workshops have helped us make significant progress (see the NITRD website at www.nitrd.gov for the workshop reports):

- *Software-Defined Networking (SDN) Workshops*. In computer networking architecture, SDN is an approach that separates the network control and data planes. While SDN is already being adopted by industry, emerging SDN technologies will enable the creation of a new form of distributed infrastructure that can support advanced applications for

[3] *Trustworthy Cyberspace: Strategic Plan for the Federal Cybersecurity Research and Development Program,* December 2011, National Science and Technology Council: http://www.whitehouse.gov/sites/default/files/microsites/ostp/fed_cybersecurity_rd_strategic_plan_2011.pdf.

[4] *Big Data: Seizing Opportunities, Preserving Values,* May 2014, The White House: https://www.whitehouse.gov/sites/default/files/docs/big_data_privacy_report_may_1_2014.pdf and *Report to the President Big Data and Privacy: A Technological Perspective*, May 2014, President's Council of Advisors on Science and Technology: https://www.whitehouse.gov/sites/default/files/microsites/ostp/PCAST/pcast_big_data_and_privacy_-_may_2014.pdf..

scientific, research, and commercial needs. SDN workshops held in December 2013 and July 2015, with leadership and support from the NCO and NITRD LSN CG, reviewed SDN research programs and advanced a roadmap for operating SDN-based networks.

- *Wireless Spectrum R&D (WSRD) Workshops*. There is an ever-increasing demand on available spectrum from the rapidly growing number of wireless devices, networks, and applications in our world today. Spectrum supports many types of critical government communications, and is the basis of the wireless revolution that is enabling new businesses and new ways to connect in our daily lives. Since 2010, agencies in the NITRD WSRD SSG have been funding R&D in spectrum-sharing technologies to enable more efficient use of radio spectrum. The SSG has held seven public-private workshops to identify and address significant issues in spectrum-sharing. The most recent workshop, "Federal - Commercial Spectrum Sharing: Models, Application, and Impacts of Incentives for Sharing," was held in March 2015.
- *Privacy R&D Workshop*. In February 2015, the National Privacy Research Strategy workshop was held by the NITRD National Privacy Research Forum (NPRF) as part of the process of developing a national privacy R&D strategy. A broad range of stakeholders participated, including privacy researchers, technology experts, communications experts, corporate representatives, legal scholars, sociologists, and philosophers. The participants in this workshop considered and debated different focus areas and objectives for a federal privacy R&D strategy.

Interagency collaborations: Interagency collaboration is difficult, but agencies working together can sometimes make a much broader impact with their R&D investments than can be accomplished by a single agency alone. An exemplar of such activity fostered through the NITRD Program is the joint solicitation for foundational research in cyber-physical systems (CPS).[5] Through interagency coordination enabled by NITRD, an NSF program solicitation on CPS was expanded to include DHS and DOT. For FY 2015 the solicitation expanded further to include NSF, DHS, DOT, NASA, and NIH. This joint solicitation allows the agencies and the community of researchers they fund to benefit from the synergy created by research on core CPS technologies and research applied to their mission domains.

The CPS SSG also collaborated with experts from the White House Presidential Innovation Fellows program on the SmartAmerica and Global City Teams Challenges.[6] These projects are spurring innovation in CPS and the Internet of Things (IoT) through public-private partnerships. Additionally, this past summer, the CPS SSG developed a multiagency framework for Smart Cities and Connected Communities to help coordinate Federal agency investments and outside collaborations. The framework focuses on foundational research and the entire R&D pipeline to transition new Smart City technologies into scalable and replicable approaches. This framework from the NITRD Program contributes to the goals of the Administration's Smart Cities Initiative (launched in September 2015) to promote research and innovation in this area.

Contributions to the research and innovation ecosystem: There are a number of ways that demonstrate the contributions of the NITRD Program to the larger research and innovation

[5] Cyber-Physical Systems Joint Program Solicitation, http://www.nsf.gov/pubs/2015/nsf15541/nsf15541.htm.
[6] Smart America Challenge: https://www.whitehouse.gov/blog/2014/06/10/smartamerica-challenge-harnessing-power-internet-things; Global City Teams Challenge: https://www.us-ignite.org/globalcityteams/partners/.

ecosystem. One way is to consider all the myriad R&D activities generated by implementing strategic plans. Another is by making open Federal data accessible. For example, the NCO has taken data collected by Federal entities and developed web-based portals to provide access to that data. I will give two examples that demonstrate the Program's impact in these ways:

- *Implementing an R&D Strategic Plan.* The 2011 Cybersecurity R&D Strategic Plan called for Federal investments that aligned with four research themes[7] and for follow-on coordination activities to bring promising research to practice. A year after the Plan's release, the NCO prepared a progress report on the implementation across Federal agencies.[8] Notable impacts were evident in, for example, the NSF Secure and Trustworthy Computing (SaTC) Program and the DHS S&T Moving Target Defense Program, including such research activities as:
    - Trustworthy Health and Wellness (THaW), a project led by Dartmouth College to tackle the challenges of providing trustworthy information systems for health and wellness given that sensitive information and health-related tasks are being increasingly pushed to mobile devices and cloud-based services.
    - Usable Privacy Policy Project, led by Carnegie Mellon University to develop scalable technologies for extracting key privacy policy features semi-automatically from website privacy policies, thereby helping users understand the privacy provided by websites before disclosing their information. This project includes transitioning their technology into open source browsers.
    - Funding of 12 new cybersecurity education research projects. Among these are a healthcare-based cybersecurity competition designed to bring young women into the field; a "build it, break it, fix it" competition to encourage not just breaking into, but also improving systems; a cybersecurity education center targeted toward veterans; and an effort focused on curriculum development for cyber-physical systems security and privacy education. Cybersecurity education research extends to research on the teaching and learning of cybersecurity. In addition to cybersecurity education research, funding is provided to institutions with strong existing academic programs in cybersecurity to award scholarships to students in cybersecurity in exchange for their taking a position in a government agency.
    - DHS S&T made four awards under an FY 2011 Broad Agency Announcement (BAA) in the topic area of Moving Target Defense, plus an additional three awards under other BAAs. In addition, a total of seven Small Business Innovation Research (SBIR) awards were made in the topic area. The work reported included innovative hardware cache designs to increase resiliency, novel bio-inspired approaches to intrusion and anomalous behavior detection, a multi-kernel OS architecture that increases system resilience, IP-hopping utilizing IPv6, and Multi-layer Ever-changing Self-defense Services (MESS) that are both resilient and manageable.

---

[7] The research themes are: Designed-In Security, Tailored Trustworthy Spaces, Moving Target, and Cyber-Economic Initiatives.

[8] *Report on Implementing the Federal Cybersecurity Research and Development Strategy*, June 2014, Networking and Information Technology Research and Development Subcommittee: https://www.nitrd.gov/PUBS/ImplFedCybersecurityRDStrategy-June2014.pdf.

- *Wireless spectrum-sharing testbed inventory*. With data gathered from the WSRD SSG agencies, the NCO created a unique online testbed information portal that shows the locations and capabilities of existing spectrum testing facilities, and indicates the status and availability of each facility to Federal, academic, and private sector researchers. By being aware of these testbeds, agencies can consider ways to share testbed resources. The economic and engineering benefits of sharing IT testbed environments can be substantial, including avoiding the expense of duplicate facilities.

Outreach: The NITRD Program uses a variety of mechanisms to reach out to researchers, private-sector developers, resource providers, and end users. Examples include two groups under the LSN CG: the Joint Engineering Team (JET) and Middleware and Grid Interagency Coordination (MAGIC) group, which have academic and industry members; the Faster Administration of Science and Technology Education and Research (FASTER) Community of Practice (CoP), which seeks exchanges of information with the private sector and new technologies to streamline the management of Federal research; and the multisector NITRD research workshops held in all the PCAs. Additionally, the NCO has an active social media presence to promote agency announcements and events and to share digital content of interest to the NITRD community and the general public.

2015 PCAST Review of NITRD and Recommendations to the NCO
As the Committee is aware, this past year the PCAST conducted a review of the NITRD Program. The PCAST released its report in August 2015[9] and its review, in my view, was quite positive overall. We invited Dr. Susan Graham, a PCAST member and co-chair of the PCAST NITRD Working Group, to the August meeting of the NITRD Subcommittee at which time she briefed the Subcommittee members about PCAST's findings and recommendations. Since the release of the report, the NCO has coordinated a number of activities with NITRD stakeholders to facilitate further discussion and respond to the recommendations.

Recommendations 1-9: I agree with the PCAST that the IT landscape changes rapidly, and we need to focus R&D and the needs for education and workforce on the areas PCAST identified. The NCO will be coordinating with stakeholders on how to respond to these recommendations. I should note that we were delighted to see that Congress explicitly included computer science in the recent STEM Education Act of 2015 (Public Law 114-59) and thank Chairman Smith and the full House Committee on Science, Space, and Technology for bringing this legislation forward.

Recommendation 10: I agree with the PCAST that the NITRD Program must evolve its PCAs in step with national priorities, and that the PCAs should be in the vanguard of foundational IT research and development activities that lead to future innovations. Over the years, many of the agency experts who participate in the NITRD Working Groups have anticipated shifts in the frontiers of IT and managed to adapt the focus of R&D activities under the existing PCAs without us redefining them. I agree with the PCAST, however, that it is time to take a different approach. The NCO currently has a process underway with OSTP, OMB, PCAST, NITRD Subcommittee members, and agency representatives in the NITRD Working Groups to address

[9] *Report to the President and Congress Ensuring Leadership in Federally Funded Research and Development in Information Technology*. August 2015, President's Council of Advisors on Science and Technology: https://www.whitehouse.gov/sites/default/files/microsites/ostp/PCAST/nitrd_report_aug_2015.pdf.

changes to the PCAs. We look forward to working with all NITRD stakeholders to improve the Program for the future.

Recommendation 11: I agree with the PCAST's recommendations on developing a transparent process for creating, chartering, monitoring, and tasking NITRD groups. The NCO is currently coordinating with OSTP, PCAST, NITRD Subcommittee members, and agency representatives in the NITRD Working Groups to address the PCAST's recommendations on the group structure and process.

Future Directions

As I stated previously, I agree wholeheartedly with the PCAST's observations on the changing nature of IT across the broad spectrum of computing, networking, and storage technologies. I believe that in its first nine recommendations, PCAST identified a set of key R&D areas that, with sustained and cross-agency support, will lead to significant progress in addressing national priorities. There are three areas, though, that I would like to call out as having particularly strong leverage with many of these national priorities. These are the areas where I especially would like to see the NITRD Program have an increased focus:

- Big Data and data-intensive computing: We recognized some time ago that scientific breakthroughs are increasingly powered by advanced computing capabilities that help researchers manipulate and explore massive datasets. Breakthroughs are now possible in education, urban services, critical infrastructure, healthcare, and disaster preparedness, prevention, response, and recovery. However, Big Data raises important issues with respect to storage and curation as well as to privacy. With the emergence of novel techniques and technologies for advancing both the foundations and applications of data science and engineering, a continued cross-agency focus will help accelerate our progress.
- High-capability computing for discovery, security, and commerce: In this point, I echo the call in the Executive Order for a National Strategic Computing Initiative. Previous investments in high-performance computing (HPC) have contributed substantially to national economic prosperity and rapidly accelerated scientific discovery, but the path for continued progress is quite steep. We very much need fundamentally new approaches in HPC. Delivering exascale computing presents several hard technical challenges, and further progress will require us to overcome the physical limitations imposed by current semiconductor technology. These technical challenges require a whole-of-government approach in which NITRD can play a key role.
- Cyber-human systems: The role of people in network and information technology is increasingly important, and vice versa. The use of robotics is moving from constrained environments like factory floors to open environments like people's homes; cyber-physical systems increasingly include people in the loop; and the devices that are communicating with each other in the "Internet of Things" are increasingly doing so as part of systems that fundamentally involve people (for example, traffic, environmental monitoring, and aging in place). Cross-agency collaboration is required to make progress in the computing-enabled human interaction and communication that enhances the modes, richness, and effectiveness of interchange among individuals and computing-enabled devices. Cross-agency collaboration is also required to make progress in

computing-enabled augmentation to enhance human capabilities and to provide improved learning, education, and training in all fields.

I thank you for your interest in the NITRD Program and the opportunity to provide testimony before the Subcommittee on Research and Technology of the House Committee on Science, Space, and Technology. I will be happy to answer any questions you may have.

Appendix A – NITRD Agencies

NITRD Member Agencies

Department of Commerce (DOC)
- National Institute of Standards and Technology (NIST)
- National Oceanic and Atmospheric Administration (NOAA)

Department of Defense (DoD)
- Defense Advanced Research Projects Agency (DARPA)
- National Security Agency (NSA)
- Office of the Secretary of Defense (OSD)
- Service Research Organizations (Air Force, Army, Navy)

Department of Energy (DOE)
- National Nuclear Security Administration (DOE/NNSA)
- Office of Electricity Delivery and Energy Reliability (DOE/OE)
- Office of Science (DOE/SC)

Department of Health and Human Services (HHS)
- Agency for Healthcare Research and Quality (AHRQ)
- National Institutes of Health (NIH)
- Office of the National Coordinator for Health Information Technology (ONC)

Department of Homeland Security (DHS)

Department of Justice (DOJ)
- National Institute of Justice (NIJ)

Environmental Protection Agency (EPA)

National Aeronautics and Space Administration (NASA)

National Archives and Records Administration (NARA)

National Reconnaissance Office (NRO)

National Science Foundation (NSF)

NITRD Participating Agencies

Department of Commerce (DOC)
- National Telecommunications and Information Administration (NTIA)

Department of Defense (DoD)
- Military Health System (MHS)
- Telemedicine and Advanced Technology Research Center (TATRC)

Department of Education (ED)

Department of Health and Human Services (HHS)
- Centers for Disease Control and Prevention (CDC)
- Food and Drug Administration (FDA)
- Indian Health Service (IHS)

Department of Interior (Interior)
- U.S. Geological Survey (USGS)

Department of Justice (DOJ)
- Federal Bureau of Investigation (FBI)

Department of Labor (DOL)
- Bureau of Labor Statistics (BLS)

Department of State (State)

Department of Transportation (DOT)
- Federal Aviation Administration (FAA)
- Federal Highway Administration (FHWA)

Department of the Treasury (Treasury)
- Office of Financial Research (OFR)

Department of Veterans Affairs (VA)

Federal Communications Commission (FCC)

Federal Deposit Insurance Corporation (FDIC)

General Services Administration (GSA)

Nuclear Regulatory Commission (NRC)

Office of the Director of National Intelligence (ODNI)
- Intelligence Advanced Research Projects Activity (IARPA)

U.S. Agency for International Development (USAID)

U.S. Department of Agriculture (USDA)
- National Institute of Food and Agriculture (NIFA)

Appendix B – NITRD Working Groups

Interagency Working Groups (IWGs)

Cyber Security and Information Assurance (CSIA)

High End Computing (HEC)

Coordinating Groups (CGs)

High Confidence Software and Systems (HCSS)

Human Computer Interaction and Information Management (HCI&IM)

Large Scale Networking (LSN)
- LSN Teams:
  - Joint Engineering Team (JET)
  - Middleware and Grid Interagency Coordination (MAGIC) Team

Social, Economic, and Workforce Implications of IT and IT Workforce Development (SEW)
- SEW Teams:
  - SEW-Collaboration Team
  - SEW-Education Team
  - Social Computing Team

Software Design and Productivity (SDP)

Video and Image Analytics (VIA)

Senior Steering Groups (SSGs)

Big Data (BD)

Cyber Physical Systems (CPS)

Cybersecurity and Information Assurance R&D (CSIA R&D)

Wireless Spectrum R&D (WSRD)

Communities of Practice (CoPs)

Faster Administration of Science and Technology Education and Research (FASTER)

Health Information Technology R&D (HITRD)

Biography for Keith A. Marzullo, Ph.D.

Dr. Keith Marzullo is the Director of the Federal Networking and Information Technology Research and Development (NITRD) National Coordination Office (NCO). He also serves as the Co-chair of the NITRD Subcommittee of the National Science and Technology Council (NSTC) Committee on Technology (CoT), where he oversees the operations and activities of the NITRD Program. The NCO reports to the Office of Science and Technology Policy (OSTP), Executive Office of the President.

Dr. Marzullo joins NITRD NCO from the National Science Foundation (NSF), where he served as the Division Director for the Computer and Network Systems (CNS) Division in the Computer & Information Science & Engineering (CISE) Directorate. He also served as Co-Chair of the NITRD Cybersecurity and Cyber Physical Systems R&D Senior Steering Groups.

Prior to joining NSF, Dr. Marzullo was a faculty member at the University of California, San Diego's Computer Science and Engineering Department from 1993-2014, and served as the Department Chair from 2006-2010. He has also been on the faculty of the Computer Science Department of Cornell University (1986-1992) and a Professor at Large of the Department of Informatics at the University of Tromsø (1999-2005), and was a principal in a startup (ISIS Distributed Systems, 1998-2002). Dr. Marzullo received his Ph.D. in Electrical Engineering from Stanford University, where he developed the Xerox Research Internet Clock Synchronization protocol, one of the first practical fault-tolerant protocols for keeping widely-distributed clocks synchronized with each other.

Chairwoman COMSTOCK. Thank you.

And I now recognize Dr. Hager for five minutes to present his testimony.

TESTIMONY OF DR. GREGORY D. HAGER,
MANDELL BELLMORE PROFESSOR,
DEPARTMENT OF COMPUTER SCIENCE,
JOHNS HOPKINS UNIVERSITY;
CO-CHAIR, NITRD WORKING GROUP,
THE PRESIDENT'S COUNCIL OF ADVISORS
ON SCIENCE AND TECHNOLOGY

Dr. HAGER. Thank you and good morning. I would like to express my appreciation as well to Chairwoman Comstock, Ranking Member Lipinski, Chairman Smith, and Ranking Member Johnson, and the other members of the Subcommittee on Research and Technology for this opportunity to present my perspectives on the NITRD Program.

As you are aware, by executive order the PCAST is charged with periodically reviewing the NITRD Program and has delivered reports previously in 2010 and 2013. To perform this most recent review, PCAST convened a working group consisting of seven experts from academia and industry. I co-chaired this group, together with Dr. Susan Graham, a PCAST member and professor emerita at the University of California Berkeley. I am pleased to be able to share with you a summary of some of the findings and recommendations of the report. My written testimony has a more complete overview of the report.

In the report, we note that when the High Performance Computing Act was introduced in 1991, much of computing research, particularly at the high end, focused on advances in computing systems themselves. As already noted in other opening remarks, today's picture is far broader. Computing empowers scientific inquiry, exploration, teaching and learning, and consumer buying and selling. Nearly every device, be it a car, a kitchen appliance, equipment on the manufacturing floor, or a child's toy is enhanced by information technology.

As already noted the National Bureau of Labor Statistics projects that more than half of all new jobs in STEM will be related to information technology.

These incredible advances in computing are reshaping the field of computing itself, creating an expanding research agenda that is increasingly driven by interactions among computing devices, people, and the physical world they inhabit, and which it is also increasingly important to many national priorities.

In preparing this most recent review, the PCAST NITRD working group consulted previous NITRD reviews, interviewed experts in a variety of areas, and ultimately chose eight key areas upon which to present findings and recommendations. Two national priorities, cybersecurity and health are highlighted. With respect to cybersecurity, the report calls out the need to support continued research on the development of secure systems, research on the management of imperfect systems and human fallibility, and mechanisms to translate new solutions into practice.

With respect to health, the report notes a growing community of technology researchers working in this space and highlights the need to empower this community through open interfaces, standards, and mechanisms for accelerating the deployment of solutions into practice.

The report highlights two areas: cyber human systems and privacy where there are strong cross-disciplinary ties with the social and behavioral sciences and with the policy community. Cyber human systems are computational systems that support communication and coordination of individuals, groups, and organizations.

As noted by Dr. Marzullo, advances in understanding of cyber human systems, will rely on fundamental research to understand the interplay of people and computing in coordination with mission-focused research and important societal needs such as education and health.

The report finds that privacy is increasingly threatened by the growth of online activity. Advances in privacy research will require deep collaboration among computer scientists, legal scholars, and behavioral and social scientists to inform both the design of computing systems and the drafting of policies and regulations.

Two areas where past investments are beginning to pay off for NITRD: IT-based interaction with the physical world and data-intensive computing. Recommendations for both of these areas call out the need for additional basic research but also highlight the need for coordination with mission agencies to advance applications of this work.

Finally, two areas in the technology base are reviewed. First, high-capability computing continues to be essential to our nation. The National Strategic Computing Initiative is an opportunity to implement a sustained program of long-term fundamental research on architectures, algorithms and software to ensure continued advances for both data-intensive and computing-intensive applications.

And last but most importantly, many of the advances we enjoy today grew from decades of foundational research. The report emphasizes that continued support for foundational research is essential to provide the basis for future innovations and disruptive advances in the use of IT.

Noting the anticipated growth in IT-related jobs, the report discusses the educational needs of the nation and recommends that the NITRD Subcommittee work in partnership with NSF and the Department of Education to develop educational and training opportunities in IT at all levels.

Finally, the report reviews the current organization of the NITRD Program and makes several recommendations to ensure the NITRD Program keeps pace with the continuing evolution of the computing field.

I will close by reiterating the findings our working committee affirmed that the NITRD Program continues to play an important role in guiding effective investments in computing research. I would like to again thank the Committee for this opportunity to discuss the findings of the NITRD working group, and I stand ready to help the Committee to advance its efforts in advancing computing research.

[The prepared statement of Dr. Hager follows:]

TESTIMONY OF DR. GREGORY D. HAGER
JOHNS HOPKINS UNIVERSITY

BEFORE THE HOUSE COMMITTEE ON SCIENCE, SPACE AND TECHNOLOGY
SUBCOMMITTEE ON RESEARCH AND TECHNOLOGY

HEARING ON
A REVIEW OF THE NETWORKING AND INFORMATION TECHNOLOGY RESEARCH AND DEVELOPMENT PROGAM

OCTOBER 28, 2015

I would first like to express my appreciation to Chairwoman Comstock, Ranking Member Lipinski, and the other members of the Subcommittee on Research and Technology for this opportunity to present my perspectives on the Networking and Information Technology Research and Development (NITRD) Program.

As the co-Chair of the NITRD working group of the President's Council of Advisors for Science and Technology (PCAST), I am pleased to share my perspective of the most recent review of the NITRD program with you. That perspective is also informed by my position as the Mandell Bellmore Professor of Computer Science at Johns Hopkins University, as well as my role serving as the Chair of the Computing Research Association's (CRA) Computing Community Consortium (CCC) – a partnership between the National Science Foundation and CRA that serves as a visioning body for the computing research community.

As you are aware, The High Performance Computing Act of 1991 (Public Law 102-194) established the Networking and Information Technology Research and Development (NITRD) program. The purpose of that Act and subsequent legislation is to coordinate the Federal investment in information technology (IT) research and development to ensure continued United States leadership in this important area. This coordination is carried out by the NITRD subcommittee of the National Science and Technology Council (NSTC). By Executive Order, PCAST is charged with periodically reviewing the NITRD program.

To perform this most recent review, PCAST convened a working group consisting of seven experts from academia and industry. I co-chaired this group together with Dr. Susan Graham (a PCAST member, and professor emerita in Computer Science Division of the Department of Electrical Engineering and Computer Sciences at the University of California, Berkeley). The working group and PCAST consulted with government agencies, leading academic and national laboratory experts, industry leaders, and other stakeholders to assess the health and evolution of the forefront of research and development in IT. The working group also assessed the operation and effectiveness of the coordination activities carried out by the NITRD subcommittee.

My remarks today summarize and offer my perspective on the findings and recommendations of the report. These cover the state of research and development in IT research fields, the preparation of the future IT workforce, and the coordination of IT activities in 18 member agencies and Federal entities by the NITRD subcommittee of the National Science and Technology Council (NSTC).

The Evolution of Computing Research

Before I present the recommendations contained in the report, I will first highlight how the field of information technology has evolved over the past three decades, as informed by the work of the working group.

Information technology drives the modern world. Nearly 80 percent of the households in the developed world have access to the Internet, and nearly half of the world is connected. Nearly every device – be it a car, a kitchen appliance, a device on the manufacturing floor, or a child's toy – is enhanced by information technology. Information technology empowers scientific inquiry, space and Earth exploration, teaching and learning, and consumer buying and selling. It informs decision-making, national security, transportation, advanced manufacturing, and protection of the environment. The National Bureau of Labor Statistics projects that more than half of all new jobs in Science, Technology, Engineering and Mathematics (STEM) will be related to information technology.

An important driver has been the exponential advances in computing power – dubbed Moore's law – coupled with Dennard scaling which allows such advances to take place while consuming roughly constant power. As a concrete example, a device with the power of a 1980's supercomputer, which consumed nearly 200 KW of power, now fits in our pocket and consumes less than 10 watts. As a result, a significant fraction of the majority of Americans who own a smart phone are now carrying a 1980's supercomputer in their pocket.

These incredible advances in computing have also reshaped the field of computing itself. When the High Performance Computing Act was introduced in 1991, much of computing research, particularly at the high end, focused on advances in computing systems themselves. Computing research was organized around three large areas – computing hardware and systems, software, and networking.

Over the subsequent decades the notion of a computer system has come to encompass a much broader range of components – computers, networks, specialized hardware such as graphics accelerators, and the software that runs on them. Large computing systems consist of networks of computers and high-capacity storage systems. Sensors now play a larger role – many computers are now equipped for video, sound, provide location services via GPS chips, velocity information via accelerometers, and bearing via a digital compass. The range of applications that run on these systems has broadened to include many physical devices (from home appliances to cars to surgical robots), web services, and mobile apps.

As a result of these advances, data – its acquisition, transmission, management, and use, have come to play an ever-increasing role in computing research. Users of computing simultaneously grew from a small group of specialists to encompass a much larger and more diverse user community, fueled by enormous growth in the computing industry. As a result, the breadth and role of "applications" grew. This has led to modern computing research to embrace a far broader research agenda increasingly driven by the intimate interactions among computing devices, people, and the physical world.

Along with those transitions, the domains in which IT is used - health, transportation, manufacturing, robotics, societal computing, smart infrastructure, defense, and scientific discovery - have begun to shape IT R&D. These domains create new opportunities for our country – the emergence of autonomous vehicles that will serve an aging population or provide ac-

cess to hostile territory, the opportunity to understand medical conditions and treatments at a greater depth than ever before, the ability to manufacture products efficiently and competitively in the United States, and many more. In short, IT research now impacts many of our most pressing national priorities.

PCAST Review of the NITRD Program

In light of this evolving landscape for computing research, there are many important areas of IT research and development that fall under the NITRD program. The PCAST NITRD working group examined previous NITRD reviews (from 2010 and 2013), interviewed experts in a variety of areas, and ultimately chose eight key areas upon which to present findings and recommendations. They are as follows:

Cybersecurity: Concern about the security of computing systems has intensified with the widespread global interconnectedness enabled by the Internet. PCAST found that federal investment in at least five key research and development areas will improve the foundations of cybersecurity: 1) cybersecurity by design – an understanding of how to construct secure and trustworthy systems; 2) defense against attack – as systems are in use, they need ongoing mechanisms for authentication, authorization, data provenance and integrity checks, and powerful tools to automatically detect potential vulnerabilities; 3) systems resilience – improved methods to mitigate the effects of an attack; 4) implementation support – methods to formally express cybersecurity policies in ways that are understandable both to people and to computers and tools to use them for policy implementation and compliance checking; and 5) better and faster methods for attribution, so that both technical and non-technical mitigations are possible.

PCAST recommends that:

- The National Science Foundation (NSF) should sponsor broad foundational research on methods to facilitate end-to-end construction of trustworthy systems, particularly for emerging application domains, and on ways to anticipate and defend against attacks, engaging not only computer science but also other engineering disciplines and behavioral and social science.

- In coordination with this research program, the mission agencies – Department of Defense (DOD), National Security Agency (NSA), Department of Homeland Security (DHS), and Department of Energy (DOE), in particular, but also others – should sponsor both foundational and more applied mission- appropriate investigations of these topics.

- The research sponsors should work closely with all agencies, including their own, and the private sector to facilitate the translation of the most promising research results into practice.

IT and Health: A growing community of IT researchers, primarily with support from NSF and NIH, is actively developing technologies at the frontier of IT and health. These include the use of mobile devices and biometric technologies to support patient monitoring and coaching, new smart devices that augment human physical and intellectual capabilities, and new modeling methods that provide enhanced diagnosis or prediction of disease. PCAST found that many opportunities for research are inhibited by significant barriers in gaining

access to health data and the lack of standards to ensure inter-operability and promote technology and data exchange.

PCAST recommends that:

- NSF, Health and Human Services (HHS), NIH, Defense Advanced Research Projects Agency (DARPA), DOD, and other agencies with responsibility for aspects of health care should continue to support foundational research in health IT. The National Science and Technology Council (NSTC) should continue to support coordination efforts such as the Health Information Technology Research and Development (HITRD) Senior Steering Group (SSG).

- NSF, HHS, National Institutes of Health (NIH), and National Institute of Standards and Technology (NIST) should develop and nurture open interfaces, standards, and also incentives for promoting the leveraging of electronic health data in data analyses in support of biomedical research and in the delivery of health care.

- NIH and HHS should create funding mechanisms that will encourage accelerated deployment, testing, and evolution of translational IT systems for clinical use.

IT and the Physical World: Research and commercial opportunities in systems that couple IT technologies with sensing and actuation are seeing the fruits of prior decades of research emerge into the broader view – for example automated driving capabilities, now emerging in the marketplace, originated in research that began over 30 years ago with support from NSF and DARPA. PCAST found that research in: 1) physical IT and human interaction; 2) physical IT and robust autonomy; 3) physical IT and sensing, 4) development of hardware and software abstractions for physical IT systems; and 5) trustworthy physical IT systems is needed to advance this field. Additionally, as new products and technologies are developed for IT-enabled sensing and acting in the physical world, it is important to put in place open standards and platforms that will encourage sharing of new technologies with and among the research community.

PCAST recommends that:

- NSF and DARPA should lead cross-disciplinary programs that will advance research and development of new approaches to robust autonomy, advance security and reliability of such systems, promote integrative approaches to human interaction, explore new sensing and interface technologies, and incentivize fundamental science on the cognitive and social aspects of interactive physical systems.

- Mission agencies – particularly DOD, Department of Transportation (DOT), and NIH – and NIST should promote the development of open platforms and sharable infrastructure for research on physical systems within application domains – transportation, agriculture, urban infrastructure, health care, and defense.

Cyber-human Systems: Computing is integral to Americans' work and personal lives and to the aims and processes of organizations, government and society. Yet, many aspects of cyber-human systems are not well understood and warrant further research. Among them are computer-based learning as it relates to various socioeconomic groups; social media and networked communication and the effects on cognitive behavior; emerging "smart"

consumer products or services and their social influences; human-machine collaboration and complementary problem solving; and development of ways of integrating big data analysis and traditional scientific method into new research pedagogies.

PCAST also found that interagency coordination has been effective in some areas of cyber-human systems such as visualization and team science, but has been only sporadic in other areas such as social computing, human-robot interaction, privacy, health informatics, and human learning and education.

PCAST recommends that:

- NSF should continue to broaden its support for fundamental research on the systems and science of the interplay of people and computing.
- OSTP and the NITRD Subcommittee of NSTC should establish or strengthen coordination at both higher and lower levels among at least NSF, DOD, DARPA, NIH, and ED. In particular, coordination and support in areas such as social computing, human-robot interaction, privacy, and health-related aspects of human-computer systems should be enhanced.

Privacy Protection: Privacy is an important human and societal value, and its protection is increasingly threatened by the growing amounts of online data. Advances in privacy research require collaboration among computer scientists, government and legal scholars, and behavioral and social scientists to inform both the design of computing systems and the drafting of policies and regulations. Technology should be developed so that the burden of privacy protection does not fall on the people being protected. Among the research challenges are: 1) understanding and clarifying what is meant by "privacy", 2) automatically tracking the use of all forms of personal data, automating compliance checking, 3) devising methods to use private data without disclosing private information, 4) detecting, signaling, and mitigating information leakage and privacy violations as they occur, and 5) creating mechanisms, frameworks, and tools to enable system builders to construct privacy-preserving systems without themselves being privacy experts.

PCAST recommends that the Office of Science and Technology Policy (OSTP) and NSTC should continue to develop and expand a multi-agency research and development program to advance the science, engineering, policy, and social understanding of privacy protection. Agency participation should include at least NSF; NIH; the units of DOD, NSA, and DHS studying the extensions of cybersecurity R&D to encompass privacy; and other relevant units within HHS, NIST, DOT, and the Department of Education (ED).

High Capability Computing: High capability computing continues to be critical to national defense, to discovery-based research in all fields of scientific endeavor, and to commerce. Advances in R&D have brought the field near to the fundamental physical limits of computer chips and to a state of ever-increasing complexity in software and computational design. Fundamental new approaches are essential for all aspects of the design of high-capability systems, from hardware to applications programming. Innovations in the energy use of computer systems, programmability, runtime optimization, system software, and software tools are all needed.

PCAST recommends that:

- NSTC should lead an effort by NSF, DOE, DOD, NIH, member agencies of the Intelligence Community, and other relevant Federal agencies to implement a joint initiative for long-term, basic research based on the new National Strategic Computing Initiative aimed at developing fundamentally new approaches to high-capability computing. That research should be sufficiently broad that it encompasses not only modeling and simulation, but also data-intensive and communication-intensive application domains.
- Under the leadership of OSTP, NSTC and the NCO should establish multi-agency coordination not only at the level of program managers, but also at the higher administrative levels reflected in the senior steering groups (SSGs).

Big Data and Data-Intensive Computing: As the widespread use of computing grows and data generation increases dramatically, big data and data-centric computing play a central role in the vitality of the public and private sectors. Research is needed on error analyses and confidence measures for analyzing massive data sets, on the determination of causality from data, on better understanding neural network models and their construction, on widening studies of machine learning to consider the larger decision making pipelines that they support, and on tools and methods that enable interactive data visualization and exploration. Attention should be paid to supporting data stewardship to mitigate losses of data and associated opportunities for machine learning, inference, and longitudinal studies.

PCAST recommends that

- NSF, in collaboration with mission agencies that collect large amounts of data for R&D, should continue to sponsor research on methods for performing inference, prediction, and other forms of analysis of data to advance all areas of science and engineering, and on methods for the collection, management, preservation, and use of data. Emphasis should be placed on formulating and disseminating methods for representing and propagating error analyses and confidence measures in large-scale data analysis; developing the theory and practice of computational and statistical methods for causal discovery from large data sets; developing deeper understandings of the foundations of neural network models and of systems challenges with scaling up these methods; uses of machine learning to guide decision making; and human understanding of large data sets and the results of their analysis.

- NITRD, through its Big Data R&D SSG, should work to establish a common set of best practices and support structures for data capture, curation, management, and access. The NITRD Subcommittee of the National Science and Technology Council (NSTC) should encourage uniform adoption of these policies through the NITRD membership.

Foundational IT Research: All of the paradigm-shifting achievements in information technology that we enjoy today rest on years, and sometimes decades, of foundational IT research. Areas such as advances in computer architecture, domain-specific languages, algorithm development, scalable and reliable software systems, networking, machine learning, artificial intelligence technologies, and more will provide for the next generation of IT advances. Foundational long-term research in information technology is essential for the application areas that build on it, and for the future of the Nation's robust IT industry.

PCAST recommends that

- NSF should continue to invest in long-term foundational research in information technology. Other NITRD agencies, including DARPA, IARPA, DOE, and NIH, should support foundational research in those aspects of IT that most affect their missions.

Education and Training

Education and training directly impact the nation's ability to create new innovations and to translate them into products and services. To satisfy the growing need for IT expertise, education and training are needed at multiple levels, from highly skilled researchers and practitioners to users of conventional IT tools and methods. Special efforts are needed to ensure that a large and diverse population of young students enters the pipeline, and that the pipeline-leakage is minimized. Strong lifelong learning programs are needed to help workers to keep up with technological change. Well-prepared teachers are essential to maintaining an educational pipeline. Although it is the states and the private sector that provide most education and training, it is essential that the Federal government lead in designing educational programs, tools, and technologies that enable IT learning and education.

PCAST recommends that:

- The NITRD Subcommittee, working in partnership with NSF, ED, and the private sector, should create new educational opportunities in IT at all levels, beginning with K-12, to grow the pipeline of skilled workers and identify future innovators and leaders. These programs should incorporate approaches that will engage underrepresented populations.

- As part of that effort, NSF should lead the development and implementation of model programs for pre- college students that attract the most talented young people to study IT. These will be the future innovators and leaders. The program should be designed to address differences in gender, economic status, and cultural background, and to collaborate with industry to provide resources to expand these programs broadly in the U.S. education system.

- NSF and ED should create programs for training and retraining of workers at all age levels with the goal of providing targeted "on-ramps" for those individuals to develop careers in the IT industry. They should fund research that includes the creation and assessment of the best ways to enable students to learn those concepts. The agencies should work with the academic community to determine and continuously update the appropriate concepts and with external partners to deploy these programs and capture data on performance and outcomes.

NITRD Coordination

The working group reviewed how the 18 member agencies in the NITRD Program invest their contributions to efficiently and effectively expand cross-government research and development. Budgetary Program Component Areas (PCAs) are the investment amounts in technical areas of interest that are tracked for record keeping and budget analysis. OSTB and OMB introduced the initial set of PCAs in 1995, and many of them have remained virtu-

ally unchanged despite the evolution of the scientific and technical fields in IT as described above. PCAST found strong support in OSTP and OMB to establish a process to update the PCAs periodically to ensure PCAs align with current priorities in IT fields. In the report, the working group proposes eight new PCAs beginning in FY 2017 and recommends updating them every 5 or 6 years.

PCAST recommends that:

- OSTP, NCO, and the NITRD Subcommittee, in collaboration with OMB, should revise the PCAs for the FY 2017 Budget cycle and beyond to reflect both the current nature of IT and the major national priorities in which IT plays a major role.

- Those four stakeholders should create a process to review the PCAs every five to six years and implement proposed modifications. PCAST or its PITAC subcommittee should provide recommendations for changes to the PCAs.

The NITRD Program includes multi-agency focus groups ("Groups") that traditionally had been aligned with (PCAs). In addition to new PCAs, this report highlights the continued need to de-couple the NITRD Groups from the PCAs so that the NITRD Groups can be modernized independently of the PCAs. This review also found very little understanding or documentation of the processes by which Groups of all kinds are created, evaluated, and retired. IT has clearly evolved over the last twenty-five years and NITRD organization needs to evolve in response. As a result of these findings, PCAST recommends changes to the Groups to help realign the coordination structure.

PCAST recommends that:

- The NITRD Subcommittee, in collaboration with the NSTC and OSTP, should establish specific language specifying what the purpose of each *type* of Group is and what mechanisms should be used to establish, monitor and terminate a Group. They should define a process to create a new Group, set its charter, and specify its correspondences with existing PCAs.

- The NITRD Subcommittee, in collaboration with NCO and OSTP, should define a process and timeline for periodic review of each Group, with a recommendation for continuation, modification, or sunset. A process for acting on those recommendations should be defined and executed. Reports on these reviews should be provided for each NITRD Review.

- Each Group at the Senior Steering level should coordinate a process to publish and publicly discuss periodically a research and coordination plan for its area of interest.

Overarching Themes and Observations

The review noted several cross-cutting themes within the many research areas that were reviewed.

The working group noted that an increasing spectrum of areas of IT span the continuum from basic conceptual foundations, to system building, hypothesis testing, and experimentation, to innovative engineering, to real-world usage via first-mover applications, and finally

to translation into common practice. As a result, increased coordination and collaboration between fundamental research programs and mission agencies is an important means to facilitate that translation of fundamental research to practice. Likewise, academia-government-industry partnerships (sometimes termed public-private partnerships) will continue to play an important role. Indeed, a growing number of academic research areas require access to production-quality platforms, large data sets, large-scale infrastructure, or large numbers of representative users – resources that are increasingly developed within the private sector.

Second, the working group noted that the IT research and education community is under increasing stress. Researchers face continuing tension when choosing between short-term, problem-solving research and the riskier, more speculative long-term investigations. Funding pressures and publication practices in IT- related disciplines are making it more difficult to sustain the long-term research that is an essential component of a strong and balanced research ecosystem. In addition, as knowledge in certain research areas grows and the applicability of that area broadens, the demand for workers in that field increases faster than the education system can prepare workers. In a growing number of instances, academic research organizations are competing with private-sector companies for skilled people, at all levels, including both potential graduate students and current faculty. This places the nation's long-term research capabilities at risk by "eating our seed corn."

Finally, the working group found that Research in IT is increasingly interdisciplinary, requiring larger and more diverse research teams and researchers who can create and lead multi-disciplinary research teams.

In conclusion, the founding goal of the NITRD program was to coordinate federal investments in computing research to ensure wise investment of taxpayer dollars. PCAST found that the NITRD leadership manages coordination and information-sharing through the NITRD Subcommittee and Groups and that the NITRD subcommittee and the National Coordinating Office (NCO) have established an important community in the Federal government. The growing breadth and impact of computing research further reinforces the need to leverage government investments by engaging the broadest possible spectrum of agencies throughout the federal government. PCAST strongly supports the mission and role of NITRD, and finds that NITRD leadership across the community is essential to lead change so that NITRD continues to achieve the strategic technical or policy vision that is in the best interests of the program and the country.

I would like to again thank the committee for this opportunity to report the findings of the report of the NITRD working group. I was honored to be chosen to co-chair the working group, I fully endorse its findings and recommendations, and I stand ready to help the committee in efforts to advance computing research to enhance the long-term competitiveness of our nation.

Biography of Dr. Gregory D. Hager

Gregory D. Hager is the Mandell Bellmore Professor of Computer Science at Johns Hopkins University. Professor Hager received his BA in Mathematics and Computer Science Summa Cum Laude at Luther College (1983), and his MS (1986) and PhD (1988) from the University of Pennsylvania. He was a Fulbright Fellow at the University of Karlsruhe, and was on the faculty of Yale University prior to joining Johns Hopkins.

Professor Hager joined the department of Computer Science at Johns Hopkins University in 1999. He has served as the deputy director of the NSF Engineering Research Center for Surgical Systems and Technology, and he served as Chair of Computer Science from 2010-2015.

Professor Hager's research interests include collaborative and vision-based robotics, time-series analysis of image data, and medical applications of image analysis and robotics. He has published over 300 articles and books in these areas. He is also Chair of the Computing Community Consortium, a board member of the Computing Research Association, and is a member of the governing board of the International Federation of Robotics Research. In 2014, he was awarded a Hans Fischer Fellowship in the Institute of Advanced Study of the Technical University of Munich where he also holds an appointment in Computer Science. He has served on the editorial boards of IEEE TRO, IEEE PAMI, and IJCV. He is a fellow of the IEEE for his contributions to Vision-Based Robotics and a Fellow of the MICCAI Society for his contributions to imaging and his work on the analysis of surgical technical skill.

Professor Hager is the founding CEO of Clear Guide Medical.

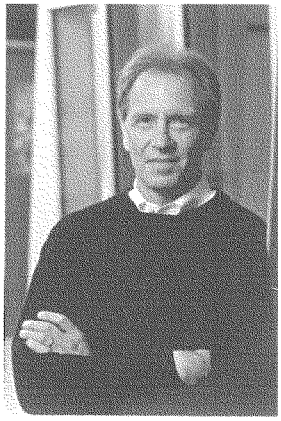

Chairwoman COMSTOCK. Thank you, Dr. Hager.

I now recognize Dr. Seidel.

TESTIMONY OF DR. EDWARD SEIDEL, DIRECTOR, NATIONAL CENTER FOR SUPERCOMPUTING APPLICATIONS, UNIVERSITY OF ILLINOIS AT URBANA-CHAMPAIGN

Dr. SEIDEL. Thank you. Good morning, Chairwoman Comstock, Ranking Member Lipinski, Mand embers of the Subcommittee, thank you for the chance to participate in this important discussion.

I am Professor Ed Seidel, the Director of NCSA at the University of Illinois. I previously served at the National Science Foundation as the Assistant Director for the Directorate for Mathematical and Physical Sciences and also as the Director of the Office of Cyber Infrastructure. In those capacities I also co-chaired subcommittees under OSTP's Committees on Science and on Technology. I'm also very familiar with the importance to the nation of networking information technology, or NIT, across all areas of research and with the National Strategic Computing Initiative, or NSCI, and its importance in maintaining American competitiveness and research and in economic development. Indeed, I can think of no other single initiative that has as much potential to support and maintain U.S. leadership in research and innovation.

I would first like to outline some critical trends in science, engineering and industrial research that must guide federal investments in NIT. First, as more complex problems in science and society are addressed, R&D is increasingly collaborative and interdisciplinary. How do drugs interact with a virus? How can jet engines be made more efficient? Answers will require integration of expertise from many areas of science and engineering and from big data and from multiple instruments and big computing. All are needed, and such problems do not respect disciplinary, nor agency boundaries.

Second, complex problems are increasingly computational and data-intensive requiring integration of large-scale computing facilities and data from many observation systems and instruments. Without this, many problems are beyond the reach of the nation's current capabilities.

Activities at the center that I direct, NCSA, beautifully illustrate these trends. Funded by many agencies, NCSA leads the two largest single computing investments from the NSF accounting for over half-a-billion dollars. The Blue Waters supercomputer, the most powerful in the academic world, provides unique science capabilities to over a thousand researchers across the nation. And I have a book here just hot off the presses that has dozens and dozens of projects that are being done on machines like Blue Waters and others that can't be done in any other way.

The XSEDE project also provides advanced digital services for resources at many other national computing and data sites. Together, these highly oversubscribed facilities support over a billion dollars worth of externally funded research projects, only about half of which come from the National Science Foundation with the remainder coming from NIH, DOE, NASA, and others.

NCSA is also building data services for the Large Synoptic Survey Telescope funded jointly by the NSF and the DOE at close to a billion dollars. This revolutionary telescope will produce data at rates never before seen in the history of astronomy, and NCSA will play the primary role in hosting, processing, and serving data to the nation's science communities.

Such 21st century investments—in this case, a telescope—are huge data-generators and they need huge computers. They are merely peripherals to the computing infrastructure needed for science. Costing upwards of a billion dollars each, such instruments are more silicon than they are steel, and they need to be a part of the overall ecosystem of national information technology investments.

Underlying all of this in this era of big data and computing, in order to maintain U.S. competitiveness in research and innovation, the NSCI is desperately needed. A whole-of-government effort is required with deep coordination across the spectrum of agencies, their communities, and digital methodologies. The NSCI rightly singled out NSF in a key integrative role in this broad ecosystem.

In August, PCAST made recommendations regarding NITRD and NCO that I agree with, and I am confident that the current leadership will do an outstanding job acting on these recommendations, enabling them to play a major role in coordinating federal NIT investments.

Beyond the PCAST recommendations, however, I would urge the Committee to consider three points: First, highly compute- and data-intensive instruments should be a part of the overall portfolio of NIT coordination. Each such instrument is typically more expensive than the largest single computing facilities with computing, networking, and data investments comparable to those of the largest HPC centers, yet they are often not coordinated with the rest of the system and they need to be.

Two, being science-driven, coordinating federal investment in NIT should involve organizations beyond NITRD, including groups under the Committee on Science. These science communities cut across all disciplines, they are funded by many agencies, and they are driving the integration of computing, data, and networking, and they need to be deeply involved.

And finally, new funding vehicles for large NIT investments that are designed to be more coordinated may also be needed. For example, NSF's MREFC vehicle for funding large facilities and DOE's CD process are used successfully to fund major instruments. One should examine whether such vehicles could be adapted for multi-agency coordination.

Thank you for giving me the chance to testify. I hope that I can help realize the great vision of research and innovation vital to the nation that I think we all share.

[The prepared statement of Dr. Seidel follows:]

BEFORE THE UNITED STATES HOUSE OF REPRESENTATIVES

COMMITTEE ON SCIENCE, SPACE, AND TECHNOLOGY

SUBCOMMITTEE ON RESEARCH AND TECHNOLOGY

H. Edward Seidel

Director, National Center for Supercomputing Applications (NCSA)

Founder Professor of Physics, Professor of Astronomy
University of Illinois at Urbana-Champaign

---

28 October 2015
Washington, DC

Chairwoman Comstock, Ranking Member Lipinski, and members of the Subcommittee, thank you for the opportunity to participate in this important discussion today.

I am currently Director of the National Center for Supercomputing Applications (NCSA) and Founder Professor of Physics and Professor of Astronomy at the University of Illinois. I have previously served as the NSF Assistant Director for Mathematical and Physical Sciences (2009-2012) and Director of NSF's Office of

Cyberinfrastructure (2008-2010). During that period I oversaw in excess of $5 billion in NSF investments in mathematical and physical sciences (including major infrastructure investments such as telescopes, light sources and other Major Research Equipment and Facilities Construction (MREFC) projects) as well as in HPC, Software, Networking, and Data and related education and science application investments. In this context, and of specific relevance to this hearing, I was an initial co-chair in 2011 of the NITRD Senior Steering Group on Big Data under OSTP's Committee on Technology, that led to the March, 2012 Presidential Big Data Initiative. I was also the co-chair of both the Physical Sciences Steering Committee (PSSC) and the Quantum Information Science Interagency Working Group (QIS IWG) under OSTP's Committee on Science, so I am very familiar with the working of the relevant groups. I have also worked in senior science and administrative positions in international research organizations in Germany and Russia, and have served as an advisor to international funding agencies, so I have a good overview of the US role, and its position, in the international context.

Currently, in my role as NCSA Director, I am responsible for an organization that leads the two single largest NSF investments in high-end computing and data analysis and their applications to science and engineering:

- The NSF Blue Waters supercomputer, the most powerful supercomputer in the academic world, is a facility representing over $400 million in combined NSF and Illinois investments, providing unique science capabilities to over a thousand researchers from across the nation, in more than 200 projects, funded separately, across all areas of science, engineering, and industry R&D. Blue Waters enables breakthrough research that requires computing and analysis at scales that simply cannot be done at other NSF-supported computing sites (or nearly any other facility in the nation or the world)[1].
- The XSEDE project, representing more than $130 million in NSF funding over 5 years for services that enable science communities to take advantage of HPC and other computing and data analysis resources at most other NSF-supported advanced computing sites across the nation. The $130 million figure *is only for integrated services to use computing and data facilities that are themselves funded separately* at a half-dozen sites across the country. Likewise, the users of these services have research projects that are funded separately by numerous agencies.

It is important to note that these two computing projects, Blue Waters and XSEDE, support research projects whose research is funded (separately) not only by NSF, but also by many federal agencies. The XSEDE project reported that in its third project year, July 2013 –June 2014, it provided computing services to nearly $800 million dollars worth of federally funded research projects, roughly half of which

[1] A supplemental document describing dozens of research projects carried out on Blue Waters, funded by numerous agencies (e.g., NSF, DOE, NIH, etc.) and also by industry, is provided.

came from NSF, about 18% came from NIH, with DOE, DOD, NASA contributing just under 10% each to this figure. Likewise, Blue Waters supports over $500 million dollars in research by teams funded by many agencies. I will come back to this trend below.

It is also important to note that the NSF XSEDE and Blue Waters facilities are highly oversubscribed, with requests for computing time exceeding what can be accommodated by factors of 4-5x or more. Because all science and engineering research progress is now intricately dependent on computing and data analysis, the pressure from research groups to use these facilities is increasing, while funding for these facilities has been essentially flat (or even slightly declining by some estimates) for more than the last decade. This puts science teams in difficult positions because their funding is independent of being allocated the computing and data analysis resources they need to carry out their research programs.

As with all major national computing centers, NCSA too is deeply engaged in numerous "big data" projects, illustrating a key point: big data and big computing go hand-in-hand; one is intrinsically integrated with the other. *Hence a third project, an instrument project of the type not mentioned in the PCAST report, needs to be highlighted:*

- NCSA is responsible for producing the data services pipeline for the Large Synoptic Survey Telescope (LSST), under construction for "first light" shortly after the beginning of the next decade. This telescope, funded jointly by NSF and DOE (construction and operating costs for 10 years will well exceed a billion dollars), *will produce roughly as much data each night as the most ambitious previous astronomy survey project did in a decade.* It will observe as many as a million transient events each night. This will be done by collecting enormous amounts of data ---with enormous computing on this data---each night. This will need to be combined with data from other astronomical instruments, and large-scale supercomputer simulations, in order to understand what it and other instruments observe.

Key Trends in Science and Engineering

With this background, I have studied the recent (August 2015) PCAST report on NITRD and spoken to numerous colleagues in relevant research communities and federal agencies, and have several comments and recommendations to make to this subcommittee. But first I would like to focus on critical trends in science, engineering and industrial research, which must be the guiding force for any related federal investments in NIT. Implicit in the above discussion, some trends are critical to the subcommittee's topic of interest:

- While breakthrough research continues to be done by small groups of researchers, increasingly, one finds interdisciplinary teams of researchers, from multiple disciplines, and often funded by multiple agencies, working together on complex problems in science and society (including in industry).

Such problems are beyond the reach of any individual group, discipline, or approach (e.g., theory, computation, experiment, etc.). A recent NRC report entitled "Facilitating Transdisciplinary Integration of Life Sciences, Physical Sciences, Engineering, and Beyond (2014)" speaks to these trends.

- These problems---across all domains---are increasingly computational and data-intensive, often requiring large-scale computing/analysis facilities *and data from experiments, observation systems, and instruments.* The demand is growing rapidly and across all areas. For example, the NSF Directorate for Social, Economic, and Behavioral Sciences (SBE) now uses as much computing time on NSF advanced computing facilities as the (much larger) Mathematical and Physical Sciences Directorate did just a decade ago. *Further, many such problems are beyond the reach of the nation's current computing and data capabilities,* so that one must downscale the problem (to the scale of "toy problems", as described in the PCAST report) to fit available facilities. While insights may be achieved by studying simple versions of real-world problems, the real-world impact may be lost.
- Data has become a de facto currency of research, both enabling quantitative description of research results, and *enabling communication and therefore collaboration between researchers (and the public) at scales never before possible.* The recent discovery of the Higgs boson was possible only because teams of thousands of scientists were able to collaborate via sharing of data collected at the experiment, and by aggregating computing capability across hundreds of sites worldwide.
- New software is needed for researchers to be productive on high-end computing and data systems, and to enable complex problem solving. A recent workshop (October, 2015) sponsored by NITRD "Computational Science & Engineering Software Sustainability and Productivity Challenges" bought together a number of agencies to discuss pressing issues around software requirements, high-productivity software engineering, reproducibility, software maintenance processes, and scalable, reusable, and portable software system architectures.
- Major instruments, such as telescopes, light sources, accelerators, ecological observing systems, highly instrumented and computerized ships, and so on, are required to do scientific research. Outside the scope of the small grants programs that fund many research groups at NSF, DOE and other agencies, these major investments usually take a decade or more to build and easily exceed a billion dollars to construct and operate. *Nowadays, these instruments are fully digital, require hundreds of millions of dollars of investments in computing, data, and networking infrastructure, and serve many communities funded by many agencies.* Both the instruments, and the networks required to transport data to computing facilities and communities that use them, are often neglected in the ecosystem under discussion. This must be addressed (see below).

As is implicit in the above discussion, the problems under study do not respect either disciplinary boundaries or agency boundaries. Federal NIT investments from many agencies must therefore be coherently coordinated if research communities addressing such complex problem to succeed. *NIT systems, including systems such as digital instruments that also serve many communities, must be part of this ecosystem.* The definition of what is an NIT system changes almost as fast as the technology itself, and hence the coordinating process must be nimble and updated frequently. Further, as the computing and data needs of "nontraditional NIT agencies", e.g., NIH, grow rapidly, they may soon find that, due to increasing demand and shortage of supply, they are unable to acquire the resources they need from other agencies, e.g., DOE and NSF, unless sufficient coordination, planning, and shared investments are made across all relevant agencies.

While the above discussion has been focused on research facing the nation's research communities, similar trends are found in industry. Like many of the nation's HPC centers, NCSA operates a vigorous Private Sector Partner program. Our program has over two-dozen partners who use our facilities and work closely with our expert staff, affiliated faculty and students to improve their methods, products and competiveness. Their needs reflect the same trends described above, and more. They are addressing real-world problems that require realistic, timely real-world solutions that can have tremendous impact on the US economy. For example, one of our private sector partners estimates that a 100PFlop system with appropriate software and algorithms, would enable simulations to improve jet engine efficiency. Merely a 1% improvement would save tens of billions of dollars in the US economy. We have similar discussions with our partners regarding agriculture, energy, transportation and other areas. Hence, while industry requires results sometimes on quarterly time scales, it also requires partnerships with federally funded NIT research on decadal time scales as well.

The need for a National Strategic Computing Initiative

In July 2015, the President issued an Executive Order (EO) that instructed federal agencies to work together in an "all of government", 15-year effort to launch the National Strategic Computing Initiative (NSCI). Within this EO, agencies were given specific roles, for example, NSF, DOE and DOD as "leadership" agencies, with NASA, NOAA, NIH, FBI, DHS singled out as "deployment" agencies that should work with other agencies to develop efforts needed for their missions. The role of industry was also highlighted. Indeed, some of the most articulate members of the small invited panel present at the White House event to unveil the NSCI were from industry.

Of the roles singled out by the EO, the NSF was given the most comprehensive responsibilities, including the central role in scientific discovery advances, a continuing role in leadership in advanced computing, especially the broader HPC ecosystem for scientific discovery, and workforce development. NSF is also leading the efforts to define computing and analysis post Moore's Law. NSF therefore needs

to play a special role in the coordination and integration. However, it is neither funded nor staffed adequately to fulfill these roles by itself. It will need help, as will all agencies.

I can say that there was a sense of relief, if not joy, in the broader research and industry communities when this announcement was made. Given the above discussion, it should be clear that the national need for such an effort, cutting across agencies and industry alike, is huge. In order to be effective (to be measured by the impact it has on the research communities that demand it) NSCI will require both:

- Continued and increased investments in the entire NIT ecosystem, which needs to broadened to include major digital instruments and their coordination and integration where warranted with other NIT systems.
- Increased effort and assistance in coordination across agencies, which is often difficult for agencies to do, even when they are in agreement that such coordination is necessary.

A key point implicit in the above is this: *with the vast majority of the research and development activities of our age requiring major developments in computing, networking, and software, not only will more investment in the NIT infrastructure be needed, it must be invested in a more coherent way.* While not lowering the overall investment numbers themselves, a more coherent and coordinated approach will not only better serve the nation's R&D communities, each of which may need access to major HPC facilities, observation systems, and instruments, but it could also lead to savings of individual investments. Considerable synergies could be realized if advanced computing facilities were deeply involved in the planning of construction of major instruments, such as telescopes or light sources, which are themselves highly digital. For example, a recent collaboration between the XSEDE project and NSF's Laser Interferometer Gravitational-Wave Observatory (LIGO) saved an estimated $70 million in computing costs. Even more important, the basic function of these *instruments will require advanced computing, data, and networking services in order to function at all.* In the words of Larry Smarr, "these instruments are more silicon than steel."

The role of NITRD and other groups in coordinating federal investments

Clearly, given the above testimony, federal investments in NIT need to be not only coordinated, but made in the most coherent possible way in order to serve research and industry communities across all areas of science and engineering. The agencies themselves do work earnestly to address some of these issues, and in some cases do an excellent job, especially if the future of a project essential to their research communities requires cooperation, and most critically if it cannot be funded within individual agency budgets.

For example, NSF and DOE have numerous projects that require joint funding, and they have developed mechanisms to accomplish this. For small programs, MOUs

may be developed between agencies that are then competed and managed collaboratively. For large construction projects, such as the LSST project described above, the Dark Energy Survey, detectors at the Large Hadron Collider, and others carefully coordinated investments of hundreds of millions of dollars are required. Where appropriate, NSF utilizes its "MREFC" process, while DOE utilized its "CD" process, and a careful and rigorous mapping has been made by the agencies to synchronize them appropriately.

While such deep, joint coordination happens as needed in major construction projects, it rarely happens in the area of NIT (with the exception of the large construction projects that are themselves increasingly NIT projects, e.g., the LSST). The nation's research communities increasingly require this, as evidenced by the figures above, where, e.g., the NSF-funded XSEDE HPC program is used as much by non-NSF funded research groups as it is by NSF-funded groups. The NSCI further requires that agencies work together to address these problems.

NITRD and the NCO have a clear responsibility to play a major role in coordinating federal NIT investments, and they must. In the past, NITRD has not been as effective as it might be in doing so, for many reasons. Agency personnel are very busy, and they have historically served complementary communities, and have a culture of taking care of their own interests and typically a mandate to serve their own missions. When agency investments are tallied up in various "Program Component Areas" (PCAs), these are sometimes done in inconsistent ways.

NITRD has often been an important forum for information sharing, but with little authority or funding of its own, its role in ensuring coherent investments has been limited. Further, it is largely a technology organization, coming under the OSTP Committee on Technology. The underlying trends in science and engineering, as described above, are driven by science communities, coordinated by the OSTP Committee on Science (and I have served on subcommittees for both CoT and CoS). Further, although computing and data analysis technology changes on very short time scales, as noted by the August, 2015 PCAST report, the PCAs have not changed since their inception *twenty years ago* in 1995.

In the recent PCAST review of NITRD, many excellent suggestions were made to address some of these issues, which I believe will go a long way in improving the effectiveness. Among them, specific recommendations to create a more modern set of PCAs, as well as specific recommendations to address the functioning of NCO-guided Groups (e.g., Senior Steering Groups (SSG) and Interagency Working Groups (IWGs)), will be helpful.

However, there are points that do not seem to receive much attention that I would urge to be further considered. Chief among them, I include:

- *Highly compute- and data-intensive instruments should be considered in the portfolio of NIT coordination.* The focus of the PCAST report (and of NITRD itself) is largely and perhaps naturally on NIT itself, defined as it applies to

various activities of cybersecurity, high end computing, and so on. This leaves out a most critical aspect of current research trends, namely that major instruments such as light sources, observing systems (e.g., astronomical, ecological, etc), genomic sequencers and accelerators, serve many communities across many disciplines, funded by many agencies, and they are themselves major investments in cyberinfrastructure. These should not be considered as an afterthought but rather as a first class citizen in the NIT portfolio. Each such instrument is typically more expensive than the largest single computing facilities, with computing, networking, and data investments comparable to those at the largest HPC centers, frequently with duplication of many elements. These are not often coordinated with the rest of the ecosystem, but need to be.

- *Coordinating federal investments in NIT need to involve organizations beyond NITRD, including but not limited to, groups under the Committee on Science.* The research communities themselves are driving much of the convergence described above. They cut across disciplines, they are funded by many agencies, and they increasingly are driving the integration of computing, data, networking, and instruments to address their research. Yet these communities are not well-represented by NITRD groups, which come under the Committee on Technology. The Committee on Science represents some of these more effectively. A broader set of organizations must be considered if better coordinated and more coherent NIT investments are to serve research and industry communities.

Finally, if the NSCI is to truly become an initiative that serves the above trends in science, engineering, and industry, not only will additional funding and better coordination be needed to keep the US in the forefront of research and economic competitiveness, but new funding vehicles for large NIT investments, designed to be more deeply coordinated, may also be needed. For example, NSF's MREFC vehicle for funding large facilities and DOE's CD process are used successfully to fund major instruments. One should examine whether such vehicles could be adapted for multi-agency, coordinated, sustained investment in major computing, data, and networking facilities, that typically also have shorter lifecycles, and applied to other agencies, e.g., NASA and NIH, as well.

H. Edward Seidel, NCSA Director

NCSA director H. Edward Seidel is a distinguished researcher in high-performance computing and relativity and astrophysics with an outstanding track record as a researcher and administrator. In addition to leading NCSA, he is also a Founder Professor in the University of Illinois Department of Physics and a professor in the Department of Astronomy.

His previous leadership roles include serving as the senior vice president of research and innovation at the Skolkovo Institute of Science and Technology in Moscow, directing the Office of Cyberinfrastructure and serving as assistant director for Mathematical and Physical Sciences at the U.S. National Science Foundation, and leading the Center for Computation & Technology at Louisiana State University.

Seidel is a fellow of the American Physical Society and of the American Association for the Advancement of Science, as well as a member of the Institute of Electrical and Electronics Engineers, and the Society for Industrial and Applied Mathematics. His research has been recognized by a number of awards, including the 2006 IEEE Sidney Fernbach Award.

He earned a master's degree in physics at the University of Pennsylvania in 1983 and a doctorate in relativistic astrophysics at Yale University in 1988.

Chairwoman COMSTOCK. Thank you so much. Thank all of you. It is fascinating work that you all do, so I appreciate the opportunity to discuss it this morning with you.

And without objection, we have the statement of Dr. Kenneth Ball from George Mason University, which will also be included in the record.

[The prepared statement of Dr. Ball appears in Appendix II]

Chairwoman COMSTOCK. So I now recognize myself for five minutes for questions, and we'll proceed with our others here.

I want to ask all of you to tell us how we can have more interface between academia, industry, and government. What is the ecosystem here and how do we sort of get more bang for our buck? It's all being utilized in a more efficient way but, how are we getting all of these things on a faster track. Do you have any thoughts on how we might better get industry engagement?

Dr. MARZULLO. I'll start. I do want to note that in NITRD we actually have a fairly broad reach into industry, and we do it in a few ways. One is through workshops. For example, in the wireless area, wireless spectrum research and development, they've been running a series of workshops, seven of them, which have been looking at all the issues dealing with the access of this limited resource, this spectrum sharing. And these workshops are attended by people from industry, academics, and government people. So in these workshops, for example, we've got people from T–Mobile, Microsoft, Agilent, Vanu, Comsearch, Qualcomm. So we have a reach into that.

Similarly, in our Cyber Physical Systems Senior Steering Group, one of the efforts being run by NIST, the Global City Teams Challenge, has been forming partnerships of industry, academics, and communities to look at cyber-physical smart cities, smart communities. And through the CPS Senior Steering Group, because of the coordination we do, NSF jumped in to help participate in those efforts. And so that's another path in.

We also have a couple of groups, the Joint Engineering Team, which looks at information sharing among federal agencies in scientific networking. We have another one called MAGIC, which is our Middleware and Grid, and these also involve industry. They come and talk with us. Microsoft, Verizon, and Cisco have been members.

So I think we are reaching out. We can do more but I think we are reaching out.

Chairwoman COMSTOCK. All right. Thank you. And, Dr. Hager?

Dr. HAGER. So I was thinking about, you know, the different perspectives on industry, academic, government interaction, and perhaps I can give you a couple of different views of that. So, as you know the IT industry is tremendously impetuous almost in its development of new technologies. And so the topics and the directions change quickly.

That being said, there's a tremendous interaction at the grassroots level among academic researchers and industry. And that's really through students moving back and forth with industry, as well as some collaborative projects with industry. You have to understand many companies do not have industrial research labs any-

more in the IT industry, and so it really is very much a grassroots level interaction.

I will, however, highlight—picking up on Dr. Marzullo's response that several venues where we do bring together government, industry, and academic researchers. So I also chair the Computing Community Consortium. And in the—that consortium we hold visioning workshops where we talk about new topics in computing, and we always have representation from industry, government, and academic researchers. So there is a conversation and there is a connection even if it may not be immediately visible from the highest levels.

Chairwoman COMSTOCK. Okay.

Dr. SEIDEL. Yes, thanks for the question.

I can give you a couple of different answers. So from my present post as the Director of NCSA, I can say we have many, many deep interactions with companies. We have a private sector program that has over two dozen companies that actually pay to be members of our consortium, and we work very deeply with them. Some of them—Caterpillar has been there for over 30 years. And when the original NSF supercomputing program started in 1985–86 in that period, the NCSA leadership at the time took out a full page ad in the Wall Street Journal and said we are open for business. And that led to a lot of industrial relationships with the University of Illinois and has actually led to an entire industrial park that is now just south of campus. And those relationships continue.

In the present day when the National Strategic Computing Initiative was announced, I was invited to the Eisenhower Executive Office Building for a little discussion on that, and I would say over half of the participants in the room were from industry. And some of the most passionate members of that panel talked about the need, for example, to have large-scale computing investments at the federal level so that they would be able to do things that they can't do otherwise.

For example, jet engine development, a mere one percent increase in the efficiency, which would require supercomputing at the level of, say, 10 to 100 times what we have now in order to really do that sort of work well, would allow tens of billions of dollars in savings in the airline industry for fuel costs, for example. So there are lots of examples where we work together with industry.

Chairwoman COMSTOCK. Thank you. And I think any time and any place you can help us assist with telling that story, so people really understand the multiplier effect of all the research that is going on and how it's integrated into everything that we see. So thank you very much.

And I yield five minutes to Mr. Lipinski.

Mr. LIPINSKI. Thank you. I just want to follow up on a couple things there. And, Dr. Seidel, I've been to U of I and seen what you've done there by having these industries come in. And it's great to see and it's great to hear all these examples of how industry has really benefitted. So as we move forward, I think we'll have to have further discussions on how we can make sure that we get them involved in making sure that this NITRD works as well as it can.

But I wanted to ask Dr. Marzullo, you had talked about this—mentioned this at least in your answer to the Chairwoman's ques-

tion, but I wanted to get a little bit—talk a little bit more about the smart cities and connected communities, multiagency framework. Can you tell us more about this and how are the private sector and city governments themselves involved in this?

Dr. MARZULLO. Mr. Lipinski, thank you for the question. The Global Cities Team Challenge was an effort that was started by NIST, and it happened at about the same time that the National Science Foundation was looking at ways to frame their efforts in cyber-physical systems. Cyber-physical systems are these complex systems that are—involve the physical world, people, and computation. And a natural partnership grew out between the two. The NIST has been working on a framework for cyber-physical systems and NSF has been looking at the foundational aspects.

So there was a partnership that sprung up being led by NIST, Chris Greer, to build these kinds of projects that tied together communities like Montgomery County, researchers, and companies small and large in developing innovative approaches to smart city problems. And then the National Science Foundation used its own ability to reach into its own researchers to help motivate them into moving into this.

NSF thought this was a great idea because this also helped form a bridge between the research that was going on to industry in terms of applications.

Mr. LIPINSKI. Very good. I want to turn in my remaining time to computing infrastructure. We know that big data and data science broadly speaking is becoming a larger part of scientific research with every passing year. But at the same time, research infrastructure in this space, including HPCs like Blue Waters but also testbeds and storage for large datasets is increasingly expensive. So how do we weigh the benefits of improving our computing infrastructure against the other research priorities for the purposes of the NITRD Program? So whoever wants to—would like to jump in here. Dr. Seidel?

Dr. SEIDEL. Yes, thank you. There are—it's clear that investments in computing impact all areas of science and engineering. So the Blue Waters facility is supporting areas from every single directorate at NSF. It's very interesting to note that even in the social sciences, which you wouldn't think of as being highly computational, they're using as much———

Mr. LIPINSKI. Oh, I understand they're highly computational.

Dr. SEIDEL. They're using—I know you—that's correct. But many of them are using—that community—that directorate is using as much computing time as the Math and Physical Sciences Directorate did just ten years ago. So it's in every single area. And so the point is that investments in these areas can really impact all other areas, and they're fundamental to them. They can't do their work without them. So I think that's one of the issues to be thinking about when you're thinking about how to distribute budgets.

Mr. LIPINSKI. Thank you. Dr. Hager?

Dr. HAGER. So I guess I would echo Dr. Seidel's remarks. As we see the field evolving, we're seeing that data is playing a larger and larger role across many, many areas, and it's clearly going to continue along those lines. I would note that, you know, other nations—for example, Japan—has a much more advanced capability

broadly in data-intensive computing and high-performance computing than the United States currently does. And clearly, they see a value in investing in that area.

So it is an important area. I agree the investments have to be weighed against the impact that they are making in these other areas, but they are the infrastructure upon which many, many areas build.

Mr. LIPINSKI. Dr. Marzullo, do you have anything to add?

Dr. MARZULLO. I'll just add a brief note here in my time that the groups within NITRD often talk about infrastructure investments, and they find ways to try to help increase the sharing of them. We have a wonderful taxonomy of wireless testbeds, for example, available on our website.

Mr. LIPINSKI. Good. Thank you. I yield back.

Chairwoman COMSTOCK. Thank you.

And I now recognize Mr. LaHood for five minutes.

Mr. LAHOOD. Thank you, Madam Chair. And I want to thank the witnesses for your testimony today and for your commitment and dedication to what you do.

Dr. Seidel, we appreciate you being here, and thank you for the work you do at University of Illinois with our program there. And I wanted to just follow up a little bit on your reference to the private sector partner program. You referenced Caterpillar and some of the other companies that you work with.

In terms of kind of the real-world effects of that in terms of product design, competitiveness, and the iForge project, can you talk a little bit more about that? And I guess as a follow-up, do you think we're doing enough to highlight what we do in the private sector in making people aware of that, and is there room to grow there?

Dr. SEIDEL. So thank you for the question.

Just a little bit of background, as I mentioned, we have many private sector partners that are focused on using computing to advance their business, and we have a specifically dedicated computing system called iForge that is just for industrial use. So they really use that facility in the way that they want to. So we operate it for them. They're members of our program, and so they not only use the facility but they use the staff and the expertise, just as important or more important than the facility because computers come and go in fairly short timescales. It's the incredible scientific and computing expert staff that we maintain. And all the centers, I'm sure, would say the same thing. That's the most important aspect.

So they are—and part of the teams that work with industry and industry then provides problems for us to work on, whether it's scaling their codes or doing things like engine design or, you know, pharmaceutical design and so on, we help them scale their codes up to larger and larger processer accounts. And so if they want to graduate, say, from the iForge machine, which is much smaller, to a Blue Waters machine, which allows them to do things that they couldn't do anywhere else, including in their own homegrown computing facilities where they just don't have facilities like that—the Blue Waters machine is a $200 million facility—then we help them make that scaling—make that jump.

Another thing that we're doing, though, we're seeing increasingly that there is the concern about big data, and they're very, very focused on big data. And so there's a new NSF program called the Big Data Hub, which I'm the PI for the so-called Midwest Big Data Hub—it'll be announced next week—and it is about private-public partnerships. And we have many, many companies, state organizations, cities, as well as academic organizations all working together on this.

Mr. LAHOOD. Thank you.

Dr. Hager, I wanted to—you referenced earlier, I guess, in the last set of questions about Japan. In terms of U.S. leadership and where we are with competitiveness in the world when it comes to supercomputing, can you talk a little bit about how we rank worldwide and where we're at in terms of our competitiveness and looking to the future a little bit and what we need to do to stay where we're at or to improve?

Dr. HAGER. Thank you for the question.

So as I'm sure you know, we no longer nationally have the fastest supercomputer in the world. That happens to be in China right now. And as I said, there are other nations investing in greater computing capacity. So I think it is an important area for the field broadly to invest in not just because of what it enables in science but also what it enables in technology research. So many of the advances that we see in the broader computing field often start in the high-performance computing field and trickle down.

The other opportunity I'd like to highlight is that, as we develop more and more advanced machines, often the challenge is to actually achieve the highest possible performance on those machines. And there are some very interesting and very fundamental computing research problems simply to take advantage of the resources we have, as well as building greater resources.

Mr. LAHOOD. And I guess is there—in terms of being—you know, continuing on the path we're on or moving up to compete with China, I mean is that strictly a resource issue or is that—are there other factors that relate to that?

Dr. HAGER. Well, certainly, you know, resources are important. We can't succeed without applying substantial resources.

The technical issues involved in developing the next generation of computing, however, are really quite amazing when you start to think about, for example, what it would take to build a so-called exascale computing engine. There are fundamental physical limitations that we're running up against. There are architectural limitations that we run up against. It's not clear that the current technologies that we have—or in fact it is clear the current technologies we have simply won't scale. And so it's a matter of resources but resources applied broadly to achieve breakthroughs in several areas in order to advance computing to the next level.

Mr. LAHOOD. And, last question, do you think we're prepared to go to that next level currently?

Dr. HAGER. Certainly, we have I think nationally the capability to go to that level, the people-resources capability to go to that level. I think it's a matter of investment, focus, and strategic planning to achieve that next set of performance levels.

Mr. LAHOOD. Thank you.

Chairwoman COMSTOCK. Thank you. And I now recognize Mr. Hultgren for five minutes.

Mr. HULTGREN. Thanks, Madam Chair.

Thank you all for being here. This is an important subject and really appreciate the work that you're all doing. I think the NITRD Program is important and gives federal agencies the ability to better work together in multidisciplinary fashion to tackle the big scientific and technological challenges we are beginning to face.

Dr. Seidel, it's very good to see you again. It was so good to be at your amazing, literally amazing facility back in April. I still talk about that often, and I've visited quite a few different wonderful sites in Illinois. We do have a proud depth of scientific ecosystem in Illinois. But one of the most impressive was being there at Blue Waters. So I just want to thank you for your work and encourage my colleagues whenever you get the chance to come to Champaign-Urbana to be able to see a phenomenal facility that is absolutely having a big impact. So thank you for your work.

In your written testimony, Dr. Seidel, you mentioned that NCSA is deeply engaged in numerous big data projects. I also appreciate your discussing the LSST project. I think it's important for my colleagues to know that this was the number-one on-the-ground priority in the last Planetary Science Decadal Survey. So the work you are doing primarily with NSF funding really enables all of our other scientific fields.

With our computational capabilities being what they are today, how does the government need to account for what many are calling more of a data-management problem than a computing problem, and would you agree with that assessment?

Dr. SEIDEL. Thank you very much for all those remarks.

There are major challenges in data management. That's for sure. I would call it an expanding universe that is growing beyond the traditional HPC investments and so on. So it's a much bigger set of problems, and we're still grappling with them. There are many aspects of this from what you do with all the data. So whether it's data that are collected from telescopes or from accelerators or from light sources and so on, or the output from supercomputers—you have to figure out what to do with all of that—the data are scientifically valuable, and they also have economic value as well.

And in fact, the entire Materials Genome Initiative that was announced 4 or five years ago—when I was at the NSF, I played a role in that—was a lot about making data computing, theory, and experiment all integral to an approach to materials that was really an economic development initiative because it was aimed at industrial competitiveness and making new materials at a much cheaper cost in half the time. And it was all largely seen as data being the integrator. And so creating services that make data that are collected from scientific activities, making them available to other researchers helps to ensure the reproducibility of the science, it helps others to take advantage of it more quickly, and it makes it directly available to industry so that they can take it up more quickly and then begin to make things. And that was what the Materials Genome was about.

So there are many, many issues, and I'd say the data issues are growing rapidly, just as are the computing ones. We can't forget about them. They go together.

Mr. HULTGREN. For years, industry and governments alike have used FLOPS as the benchmark standard for our fastest computers. I think this is a certainly valuable measure, which should not be abandoned, but what other ways do we need to be looking at our computational abilities to make sure that we have the most capable machines? Dr. Seidel?

Dr. SEIDEL. We have a lot of work to do, and every aspect, as we heard on the technologies themselves, on the expertise of the scientific communities to take advantage of these machines that are getting harder to process or to program. If you have a million processors—the Blue Waters computer has close to a million processors, think about how you would program such a machine to do a problem in astrophysics or in biology. So we have to invest a lot in the training of the next generation of researchers. That's really, really critical.

And in fact, I had the privilege to meet with about 60 students from the XSEDE project who were at a conference in St. Louis this summer, I queried them and they all said that they were not learning what they needed in their university curriculum; they were learning it in these workshops that we were holding. So there's a lot that needs to be done in every aspect of this.

Mr. HULTGREN. You also discussed the Strategic Computing Initiative, and I've been in touch with Dr. Blazey, you know, at NIU who was encouraging this kind of initiative when he was OSTP. Earlier this year and in the previous Congress the House passed my legislation, the American Supercomputing Leadership Act, which would create a dedicated exascale program and ensure a more open facility to research the research community.

I agree with the three leadership agencies in the initiative, and I think it's important to stress to my colleagues the national defense needs, mainly in workforce development, that are developed first outside of DOD with students and researchers at NSF and DOE.

Quickly—and I'm just about out of time—but how should we improve our interagency working groups at NITRD to better serve our research capabilities and connect the core capabilities certain agencies have? And also if—maybe we can follow up in writing, too, if you have further comment on PCAST review. That may be helpful as well.

Mr. SEIDEL. I would just make a quick answer to that. I think the recommendations actually were excellent. I think they need to be acted on, and I'm very confident that they will be. I'd like to see a broader set of activities, though, that also really deeply engages the science communities. The NITRD Program does focus naturally on the technologies and so—but the science communities and the engineering communities are the ones driving this so they need to be engaged.

Mr. HULTGREN. Great. Thank you. Thank you, Madam Chair. I yield back.

Chairwoman COMSTOCK. Thank you. And I now recognize Mr. Palmer for five minutes.

Mr. PALMER. Thank you, Madam Chairman.

Dr. Hager, in the past, NITRD Program has had problems with the way in which participating agencies categorized their NITRD budgets. Is that still a problem?

Dr. HAGER. So thank you for the question.

Certainly, in the past there have been issues related to the question of what goes into the program component areas, the PCAs, which are the budget categories by which one measures the investments in the NITRD Program. I think that part of those issues had to do with the fact that the PCAs historically were quite outdated, as I have already noted. They're over 20 years old. They in many cases no longer naturally fit the activities within the computing research field. And that's in fact why we spent a great deal of effort in our working group attempting to understand first how one would go about changing the PCAs and also suggested a process by which they could be continually renewed so that there is a natural mapping between the PCAs and areas of interest within computing research.

To give one simple example, we have the National Robotics Initiative but we don't have a natural way to measure investment in robotics. So where would robotics go in the existing PCAs?

Mr. PALMER. Do you—does NITRD, which is a—is the main source of federally funded information technology. Is there anything being done to ensure that there's no duplicate research that's being done in the agencies? Would you like to respond to that, Dr. Marzullo?

Dr. MARZULLO. Thank you for the question. The way NITRD works is we have several groups where we have representatives from the agencies discuss their portfolios and review what is being funded. The details of this are published every year in our supplement, and much of the work in there is not only to avoid duplication but to find ways we can work with each other, which is I think even more important. I'd like to say the secret sauce of NITRD is collaboration.

Mr. PALMER. That's right. Thanks.

Dr. Hager, your testimony mentions the tension between purchasing the long-term foundational research and short-term problem-solving research. How is NITRD approaching that problem?

Dr. HAGER. So thank you for the question.

I think it's important to understand that NITRD represents an extremely broad collection of agencies, including NSF, which of course is the center of foundational research and computing and extending through mission agencies, including DARPA, NIST, Department of Education, and so forth.

So NITRD in many ways is really, I believe a convening ground where there is the opportunity to have exactly the discussions of the balance between basic research and more applied mission-focused research. And my understanding, through discussions with NITRD, is that there are a variety of conversations that take place among those agencies to achieve that balance.

I will say the remarks were also directed to the fact that as we were saying, computing research funding is sometimes challenging to come by, so one is, as a young faculty member, very tempted to focus on concrete and short-term problems simply because one can

get funding from the broadest set of agencies in that case. And that is the sort of thing that will advance your career, to show those immediate results.

Mr. PALMER. And this question can apply to all of you, but in terms of the short-term problem-solving research, is that something that the private sector could play a greater role in and leave the longer-term stuff to the federal government?

Dr. HAGER. So one of the interesting evolutions in computing research that I alluded to earlier is that relatively few companies now have industrial research groups within them. So Microsoft is a perfect example of a company that still does have a research group, and it's possible to use that group as a buffer between short-term and long-term research.

I think at this point, because of where the industry is, it really is becoming more incumbent on academia, we're finding, to really have that ecosystem of both short-term and long-term research. I think we would welcome the opportunity to better support some of the shorter-term research through other mechanisms if they were available, but at this point we don't see those mechanisms. And so you're seeing the community really fill that gap that has been created by the lack of industrial research groups.

Mr. PALMER. Well, this is fascinating and necessary work, and I want to thank you for being here today. And one of the more polite groups of witnesses we've had. Thank you.

Chairwoman COMSTOCK. I now recognize Mr. Abraham for five minutes.

Mr. ABRAHAM. Thank you, Madam Chair, and I thank the doctors for being here, too.

Dr. Marzullo, is there any way the National Coordination Office itself can be improved, enhanced to support NITRD?

Dr. MARZULLO. First, I'm going to give a shout-out to the National Coordination Office crew. Some of them are sitting behind me and they're a fantastic group of people, I must say.

I think the improvements we've been looking at are better ways to manage the NITRD Program, so how we can have better group structure, how we can get information more quickly.

So—and I actually support all of the recommendations that PCAST made. I think that was a wonderful set of groups, and we are acting on them.

But the National Coordination Office itself, they're a great group of people. I couldn't want a better staff.

Mr. ABRAHAM. All right. Dr. Hager, how often is the NITRD Program reviewed, and how often would you want it—to review it?

Dr. HAGER. Well, thank you for the question.

So the current practice is to review every two years, and as you see, we did 2010, 2013, 2015, so we're almost managing every two years. I would say two years, I believe, is too often. It's very difficult to really perform a meaningful review just two years after the previous review happened. There's really not a lot of time to react.

Mr. ABRAHAM. What would you say would be the ideal number?

Dr. HAGER. So I would say in the three- to five-year time frame would be———

Mr. ABRAHAM. Okay.

Dr. HAGER. —a more meaningful time to do a NITRD review.

Mr. ABRAHAM. Now, in your report you made several recommendations to NITRD. The stakeholders themselves, how are they receiving those? Are they a positive response, pushback? What's their take on the recs you made?

Dr. HAGER. So I have to say that, personally, I have only heard positive responses from the individuals with whom I've interacted. And I'd like to compliment Dr. Marzullo. I know that he has already within his office been reacting to many of the recommendations and, you know, he may have additional comments in terms of how those changes have been filtering through the NITRD Program.

Mr. ABRAHAM. Okay. And this is for any or all of you. I know the DOE is not part of the NITRD right now. Would that be a good thing, the Department of Education?

Dr. MARZULLO. Department of Education is a participating agency, so we have had representatives come to talk about STEM, and we always welcome them more.

Mr. ABRAHAM. But they're not a—just a steadfast member? They do bring people in, though?

Dr. MARZULLO. They do bring people in. They do work with us, yes.

Mr. ABRAHAM. And you think that's good enough? I mean you're getting enough input from that aspect to do some good things with them?

Dr. MARZULLO. I would always welcome more contact from———

Mr. ABRAHAM. Education.

Dr. MARZULLO. I'm sorry, education. They're a strong agency.

Mr. ABRAHAM. Okay. All right. Thank you, Madam Chair. I yield back.

Chairwoman COMSTOCK. Thank you. Actually, I will take the prerogative of one more question picking up on talking about the workshops that were often more helpful for the students than the classrooms. I was wondering if all of you might address a little bit about how we need to change education for dealing with the rapid changes that are going on in this whole industry. I think of a friend of mine, his son who's a brilliant student, went to Stanford, and then came to him after the first semester and said, you know, Dad, I'm dropping out of school. You know, as the Dad, you're kind of like oh, no, and he said, no, it's good. Like I'm going to work because if I don't go out and work in this field, I'm going to get behind by being in the classroom. So he was taking his classes while he's working and doing this because he was worried kind of about what you said.

So how can we change that education framework and dynamic and really have a—I mean he's making money now while he's taking his classes, too. And I've seen in my district we have a cybersecurity high school program. So how can we push this down to high school, too, where these kids are getting trained to go into the cybersecurity field out of high school and they are being recruited out of high school into really good-paying jobs, and then having those employers pay for them to get college credits as they move forward? So they basically have a free college degree waiting for them when

they get out of this program. So how we can really modernize our education system to deal with this quickly adapting industry?

Dr. SEIDEL. I'll make a couple quick comments on that and then let the others comment. When I was meeting with those students, I was really astounded to hear that they're basically still being trained in 17th century methods in physics, which is learning calculus, but not in 21st century, even 20th century methods in the classroom. So this is largely due to the fact that professors are teaching the time-honored tradition and so on. And so they need a little bit of a kick, I think, often. And so I think agencies can help them move forward faster by incentivizing changes and providing programs to tell them what they expect from their research activities and so on. So that's one way this can be done.

My son also was recruited out of college and decided to stay in. It was largely because I think he thought the longer-term prospects for him would be good there, but he did really think about the same exact thing.

Dr. HAGER. So let me just first just say on a personal level I understand completely how challenging it can be to advance teaching in the classroom. In my area, computer vision, there—I often come into a lecture and say ten years ago we didn't even know how to begin to solve this problem. We now consider it a solved problem. We're actually building on top of it. So the field really does evolve quite rapidly.

One of the challenges I'd really like to highlight that the stress that the education—computing education is under these days. In my department, the number of majors has between tripled and quadrupled over the last few years, which creates enormous challenges in the classroom. I think the notion of looking for opportunities to bring experiential learning into the classroom. And I would actually highlight I think this is a place where industry could play a strong role. If we had representatives from industry coming into the classroom and teaching, it would both address the capacity needs within our department, as well as providing, I think, a very sorely needed perspective on where the computing industry is today.

Chairwoman COMSTOCK. That's a great idea, yes.

Dr. MARZULLO. Part of the problem you've already mentioned is the rapidly changing field of information technology and trying to even get the teachers up to speed on what's going on, get the material into their hands. Sometimes we seem to think that MOOCs are going to solve everything, and they will to a small degree, but training the teachers, getting information, developing material is a priority.

I also think there are some very good programs out there for cybersecurity, the Scholarship for Service program, the Cyber Challenge Program of DHS. More will be done in that. I personally am interested to see when such programs will start springing up in the area of data analytics. That is clearly the next wave, and there's going to be a huge demand for this, and I think we're unprepared for that wave.

Chairwoman COMSTOCK. Well, thank you. I really appreciate all of our—actually, Mr. Lipinski, did you want—okay.

Well, thank you for your expertise and for your enthusiasm for your work. And I'd like to thank all of your colleagues that came with you today. This is an exciting area that we certainly always have to get caught up on. If it's hard for these brilliant students to keep up on it, you can imagine how challenging it is for all of us.

So we appreciate your thoughts and ideas, and any time you can give us more information on how we might better assist in what you're doing, it would be most appreciated. So thank you for the opportunity to visit with you today.

And the Committee is now adjourned.

[Whereupon, at 11:21 a.m., the Subcommittee was adjourned.]

Appendix I

Answers to Post-Hearing Questions

ANSWERS TO POST-HEARING QUESTIONS

Responses by Dr. Keith Marzullo

Response of Dr. Keith A. Marzullo
Director, National Coordination Office for
Networking and Information Technology Research and Development
to questions posed by the Subcommittee on Research and Technology
of the
Committee on Science, Space, and Technology
U.S. House of Representatives

Chairwoman Comstock and Ranking Member Lipinski:

Thank you for your invitation to provide additional information regarding the activities of the Federal Networking and Information Technology Research and Development Program (NITRD).

Questions submitted by Rep. Barbara Comstock, Chairwoman, Subcommittee on Research and Technology

1. ***A primary objective of the NITRD program is to support foundational computing research to drive innovation, productivity, and ultimately, economic growth. With that in mind, do (or should) agencies evaluate the degree to which a research proposal considered under NITRD may be connected to actual innovation and economic growth? In other words, how do (or how should) current federal funding levels for computing R&D impact cross-discipline prioritization and project selection?***[1]

This is a simple question that posits an appealing principle: when funding is tight and we are recovering from the recent severe recession, then priority should be given to research that is clearly connected to actual innovation and economic growth. However, applying this principle in practice is hard: determining a proposal's connection to actual innovation and economic growth is often surprisingly difficult.

One reason is that research that can lead to transformational results is usually high risk: failure of early research can set up for future successful research projects. Another reason is that the problem may be intriguing but its relevance to anything is unclear, yet progress on the problem can lead to transformation. The first kind of project would fall under "Pasteur's quadrant"[2]: research that, while inspired or is applicable to real-world problems, is still searching for fundamental understanding. The second kind of project would fall under "Bohr's quadrant": research searching for fundamental understanding solely for curiosity's sake.

[1] Appendix A-NITRD Agencies and Appendix B-NITRD Working Groups are provided as references for all responses.
[2] Stokes, D. E., *Pasteur's Quadrant – Basic Science and Technological Innovation* (Brookings, 1997). Stokes categorized research into quadrants using two axes: (i) Is the research driven by a quest for fundamental understanding? (ii) Is the research driven by the need to serve a practical use? Pasteur's quadrant contains research that answers "yes" to both (i) and (ii), and Bohr's quadrant contains research that answers "yes" to (i) and "no" to (ii). Non-foundational and practical use-driven research is put into "Edison's quadrant," which answers "no" to (i) and "yes" to (ii).

A historical example of research in Bohr's quadrant led to the eventual development of satellite navigation.[3] Using a 20 MHz receiver, George Guier of Johns Hopkins University Applied Physics Laboratory (JHU APL) monitored the 1 kHz signal from the then recently launched Sputnik I. With a lot of hard work, he and his colleagues showed that one could determine a satellite's orbital data and the current location of the satellite based on the Doppler data of this 1 kHz signal. This was verified with Sputnik II. Five months later, they turned the problem around: determining the location of the receiver based on the Doppler and orbital data of a satellite. Solving this new problem (which lies solidly in Pasteur's quadrant) led to the first navigation satellite system used for Polaris submarines that, in turn, led to the current Global Positioning System (GPS). A study done for the National Space-Based Positioning, Navigation and Timing Advisory Board in June 2015 estimated the benefits of GPS on the U.S. economy in 2013 to be about $56 billion (0.3% of the GDP).[4]

A more current example of research in Bohr's quadrant is a strong definition of secure program obfuscation: find a way to release a computer program that can run but does not allow anyone to determine how it works because it is "obfuscated." Work in 2010 on this problem focused on being able to define exactly what this means, and then showing that being able to do such secure obfuscation was impossible. Recent research in this area has focused on other definitions of secure obfuscation that were useful and implementable. A breakthrough in 2013 led to a definition that might be useful, and the National Science Foundation (NSF) has funded a project, firmly in Pasteur's quadrant, exploring what can be done with these new insights with the goal of applying them to cloud computing. Doing so would widely deploy any positive results: the global market for cloud-computing services is predicted to reach $176 billion in 2015, and that it is growing fast even when most other parts of the industry are stagnant or even declining.[5]

A large portion of the NITRD portfolio lies in Pasteur's quadrant. The path to actual innovation for such projects can be very long. An example is the Broad Agency Announcement (BAA) by DARPA in 1997 titled "Active and High Confidence Networks." This BAA called for proposals that addressed the new idea of "Active Networks," which were "a new generation of networks based on software-intensive network architecture." This was to be done by placing computation within packets traveling through the network. The goal was to "provide a basis to support the increasingly sophisticated services demanded by defense applications." Research projects were funded that led to new ideas and intriguing prototypes, but Active Networks did not result in technology that was widely deployed. It was hard to come up with a clear use case that was a sufficiently compelling solution to a pressing need.[6] Most of the efforts in Active Networks took place from the mid-1990s to the early 2000s.

---

[3] Guier, William H. and George C. Weiffenbach. Genesis of Satellite Navigation. *Johns Hopkins APL Technical Digest* 19(1):14-17, 1998.

[4] "The Economic Benefits of GPS," September 1, 2015. http://gpsworld.com/the-economic-benefits-of-gps.

[5] "The cheap, convenient cloud," *The Economist*, April 18, 2015. http://www.economist.com/news/business/21648685-cloud-computing-prices-keep-falling-whole-it-business-will-change-cheap-convenient.

[6] Feamster, Nick, Jennifer Rexford, and Ellen Zegura. "The Road to SDN: An Intellectual History of Programmable Networks." *ACM Queue* 11(12), December 30, 2013.

Subsequent efforts took these negative results into account, and focused on technologies that separated two fundamental components of network routing: the data plane (that is concerned with forwarding inbound data) and the control plane (that is concerned with the network topology). By separating these two components, researchers were able to focus on the benefits of, and the problems associated with, software control of the data plane. Doing so allowed some of the problems implied by the DARPA Active Networks BAA to be addressed, including those arising from the rapidly increasing size and scope of the Internet. This line of research, which started in the early 2000s, resulted in what is today called Software-Defined Networking (SDN). Now, many commercial switch manufacturers support an SDN interface, and many different controller platforms have emerged. These have been used to provide applications such as dynamic access control, server load balancing, user mobility, and network virtualization. Network virtualization, by itself, is a major step forward in a long-standing problem, and its impact is still being understood. Google was an early adopter of SDN for managing its wide-area traffic, and the SDN industry is growing rapidly even as foundational research in SDN continues. A 2013 report from SDXCentral observed that the SDN industry went from nonexistent in 2009 to 225 companies in 2013, and forecasted the SDN market growing from $1.5B in 2013 to $35.6B in 2018.[7]

Active Networks did not result in immediate actual innovation, but it did, over time and in unexpected ways, define an area that is already proving to be an important game changer. It also foreshadowed a recent approach in networking called "network function virtualization," which is also proving to be another game changer.

Hence, any measure that asks for research proposals considered under NITRD to be connected to actual innovation and economic growth should be approached with extreme caution: we do not know of any reliable methodology for predicting the eventual actual innovation and economic growth resulting from research in Bohr's or Pasteur's quadrants. We could lose innovations like GPS, SDN, and potentially the fruits of the research on secure program obfuscation.

2. ***What lessons learned and advice do you bring from your background of co-chairing two NITRD Senior Steering Groups while at the National Science Foundation?***

Through my experiences co-chairing two NITRD Senior Steering Groups (SSGs), I learned what I now call the "secret sauce" of the NITRD Program: coordination and collaboration. Working at an interagency level is a great way to get things done. For example, I joined the Cybersecurity and Information Assurance Research and Development (CSIA R&D) SSG shortly after the cybersecurity strategic plan[8] was completed. At NSF, we used this plan as the basis of a rewrite of our principal cybersecurity program that brought in other parts of NSF – Engineering, Mathematics, Cyberinfrastructure, and the Social, Behavioral, and Economic Sciences – with good effect. Over the next few years, the CSIA R&D SSG did outreach by doing conference

[7] Infographic: SDN Market Size to reach $35B by 2018. https://www.sdxcentral.com/reports/sdn-market-size-infographic-2013/.

[8] *Trustworthy Cyberspace: Strategic Plan for the Federal Cybersecurity Research and Development Program*, December 2011, NSTC: http://www.whitehouse.gov/sites/default/files/microsites/ostp/fed_cybersecurity_rd_strategic_plan_2011.pdf.

panels, which were made up of agency representatives, to promulgate the ideas and rationale of the strategic plan to academic and industry researchers and developers. And, the CSIA R&D SSG was, and continues to be, a way to ensure broad agency participation in workshops and meetings that individual agencies hold in cybersecurity to address their mission goals. In sum, the member agencies worked together to develop a strategic plan, ensured their programs aligned with this plan, and then worked to keep each other informed so as to ensure gaps were covered, duplication reduced, and results of activities shared.

The Cyber Physical Systems (CPS) SSG showed me other benefits of working in the interagency realm. For example, NSF initiated its CPS program in 2008.[9] The goals of the CPS program, which supported a broad, foundational research agenda, partially overlapped with the goals of programs in other agencies that aligned with the goals of their respective agency missions. One of NSF's strengths is the visibility of its programs to academic institutions, and so once the CPS SSG was formed, we discussed rewriting the NSF CPS solicitation to include funding opportunities for CPS research projects by other agencies. This has been a success. The solicitation is currently joined by the Department of Homeland Security (DHS), Department of Transportation (DOT), National Aeronautics and Space Administration (NASA), and National Institutes of Health (NIH).

Discussions in the CPS SSG also uncovered an opportunity for a partnership between NIST and NSF. As NIST was moving forward with its successful Global City Teams Challenge initiative, NSF observed that providing some additional funding to NSF CPS principal investigators who were involved in the team efforts helped the missions of both NIST and NSF.

The NITRD National Coordination Office (NCO) was instrumental in enabling all these coordination and collaboration efforts. It is hard for me to imagine how such results could be achieved without the NITRD Program.

3. ***What is NITRD's role in assuring that the number of agencies represented can take advantage of the potential capabilities an exascale system can offer, particularly in the realm of big data?***

The NITRD Program provides a platform for collaboration, coordination, and information sharing within its working groups. Members of the High End Computing Interagency Working Group (HEC IWG) are kept informed of emerging exascale architecture and technology trends. A number of HEC IWG members also support the Department of Energy's (DOE) co-design for the exascale effort, as evidenced by the joint Request for Information (RFI) by DOE, NIH, and NSF to identify scientific research topics and applications that need exascale HPC capabilities.[10]

A major topic being explored in both the HEC IWG and the Big Data Senior Steering Group is the need for improved alignment between big compute and big data. Big Data developed within an environment that required fast, inexpensive, resilient, real-time (usually distributed) computing on often unstructured data; as opposed to the supercomputing environment of

[9] In fact, this program coined the term "cyber physical system."
[10] "Request for Information (RFI) on Science Drivers Requiring Capable Exascale High Performance Computing" http://grants.nih.gov/grants/guide/notice-files/NOT-GM-15-122.html.

high-end, highly engineered, reliable equipment and customized programming that dealt with large computational problems where time from "input to decision" was not as important as the accuracy of models and simulations. Most agencies require both of these computing environments and see the convergence of them into a single system as essential to solving the Nation's challenges. NITRD provides the means by which experts from both "sides" of computing, exascale and big data, can collaborate to design the systems of the future that will have the accessibility, affordability, speed, and resilience of the big data systems, and the computational power and reliability of the exascale systems.

NITRD agencies are also broadening the use and availability of High-Performance Computing (HPC) capabilities through programs such as NSF's XSEDE (eXtreme Science and Engineering Discovery Environment) and the Department of Defense High Performance Computing Modernization Program's (DoD/HPCMP) HPCPortal. These programs provide services to support the productive use of supercomputers, data collections, and HPC software tools. XSEDE also supports users who will be developing novel cloud architectures that will further aid in broadening the availability of HPC resources.

4. ***Is NITRD's membership actively coordinating to support the DOE Office of Science's efforts to reach the exascale level in high performance computing? Are there any challenges to coordination on this topic?***

DOE is an active member of many of the NITRD groups, including the HEC IWG. Agency members of the HEC IWG are often invited by DOE to participate in its proposals and technical reviews. DOE and other agencies also bring forward research topics that would benefit from collaboration with other agencies, e.g., storage systems and IO (SSIO). See also the response to Chairwoman Comstock's Question 3.

5. ***Why do you believe that the NITRD program is important? Please discuss the significance of federal investments in networking and information technology research and development.***

The NITRD Program supports coordination among Federal agencies to assure that the networking and information technology research and development needs of user communities (Federal agencies, universities and academic researchers, the commercial sector, and the public) are addressed. To assure that the future IT needs of these user communities are met, Federal agencies support fundamental research in information technologies and in the new and improved technologies that enable this research. NITRD helps Federal agencies coordinate the development of programs for this research and the sharing of their results. The NITRD Program supports coordination among Federal agencies to:

- Coordinate user communities (e.g., hold workshops) to identify needed research in leading-edge IT science disciplines to assure that future science and technology needs are addressed for Federal agency missions and for the university, research, commercial, and public communities;

- Share information on research planning among Federal agencies so that research needs are addressed and Federal agencies benefit from each other's IT research programs without duplicating that research;
- Organize demonstrations and prototypes of emerging technologies to engage the commercial, public, and university communities; and
- Assure that research results are shared quickly among Federal agencies and with the pubic, commercial, and university communities through coordination among the Federal agencies and through outreach to other communities.

The NITRD Program supports the coordination of the research and development required for the advancement and expansion of IT capabilities that support continued U.S. leadership in science and technology. This provides the basis for ongoing commercial and business development and the advanced cyber services that are critical for improving IT capabilities, scientific research capabilities, and an ever-increasing "cyber-society," in which people and society benefit from the interconnections and enhanced capabilities that IT enables.

6. ***Is there any way that the National Coordination Office itself could be improved to better support the NITRD program?***

The National Coordination Office provides exceptional support to the NITRD Program. We support the President's Council of Advisors on Science and Technology's (PCAST's) recent comments and recommendations on the NCO,[11] and plan to implement those recommendations that we believe will enhance the support that the NCO provides to the NITRD Program.

7. ***Researchers at Harvard recently designed the first on-chip metamaterial with a refractive index of zero, meaning that the phase of light can travel infinitely fast. How does this affect quantum computing?***

The coordination of this research is shared jointly by the NITRD NCO and the National Nanotechnology Coordination Office (NNCO), which coordinated together to provide this response.

Nanotechnology has enabled the development of nanostructured metamaterials with exotic optical properties not found in nature. Quantum computing uses an entirely different approach than classical computing and also utilizes another aspect of quantum mechanics known as entanglement, which is the interaction of quantum states of a particle at a distance. Rather than store information as 0s or 1s as conventional computers do, a quantum computer uses qubits – which can be a 0 or a 1 or both at the same time. One of the big challenges to creating reliable quantum computers is making a system that does not break down the moment one tries to interact with it. The Harvard University invention has the potential to enable qubits to be entangled at longer distances and help quantum engineers experiment with different approaches to creating a truly powerful quantum computer.

[11] *Report to the President and Congress Ensuring Leadership in Federally Funded Research and Development in Information Technology.* August 2015, President's Council of Advisors on Science and Technology: https://www.whitehouse.gov/sites/default/files/microsites/ostp/PCAST/nitrd_report_aug_2015.pdf.

Fiber optics is already used to carry information over long-haul data infrastructure. However, before the information can be used by a computer, it has to be converted to an electrical signal. The Harvard University invention can shrink or squeeze light so that it can be processed on the nanoscale of a silicon chip. Fabricating such a metamaterial on a chip allows integration with other nanofabrication techniques for on-chip light manipulation. This has the potential to enable optical computers that would be much faster and use far less energy than current computers by eliminating the need to make the conversion from optical to electrical and back to optical.

a. How will this affect our everyday lives?

IT research and applications, particularly in the NITRD areas of High End Computing (HEC), Large Scale Networking (LSN), and Cyber Security and Information Assurance (CSIA), will significantly benefit in the future from the increased capabilities provided by this technology. Faster, lower-power, high-performance computing will enable applications throughout our society including better weather forecasting, bioinformatics analyses supporting personalized medicine, data processing for the Large Hadron Collider, and support of leading-edge science, e.g., real-time steering of large-scale instruments such as used for tokamaks, and analyses of astronomical data.

b. ***How does the NITRD program support research like this?***

Federal agencies support fundamental research in information technologies and in the new and improved technologies that enable this research. NITRD coordinates Federal agencies in developing the programs for this research and in sharing the results.

8. ***Are there key factors limiting progress in computing? If so, what are those factors, and how can the NITRD program help?***

There are several key factors limiting progress in computing. In response to this question, I touch on four key factors that I believe are at the forefront.

1. As noted in the National Research Council report *The Future of Computing Performance: Game Over or Next Level?*[12]: "Fast, inexpensive computers are now essential for nearly all human endeavors and have been a critical factor in increasing economic productivity, enabling new defense systems, and advancing the frontiers of science...The essential engine that made that exponential growth possible is now in considerable danger." The report cites thermal-power challenges and increasingly larger energy demands by computers as the key technical challenge limiting progress in computing.

   Computing advances during the last 50 years have depended critically on the rapid growth of single-processor performance with ever-decreasing cost and with manageable increases in power consumption. That growth stemmed from increasing the number and speed of

[12] *The Future of Computing Performance: Game Over or Next Level?* National Academies Press, Washington, D.C., 2011.

transistors on a processor chip, while also reducing transistor size. However, around 2003 – 2005, the semiconductor industry confronted limits to further reduction of transistor size and to increasing transistor density on a chip. As a result, microprocessor clock frequencies have remained essentially the same in order to keep total power, area, and generated heat within economically acceptable and physically achievable bounds. Thus, the performance of a single processor has stalled. No commercially viable technologies exist today to replace current silicon-based semiconductors with materials that would overcome the heat-dissipation limits of silicon.

There are several NITRD agencies that are working on different potential technologies, such as single electron transistors and quantum computing. NITRD will help coordinate the results of these efforts primarily through the HEC IWG.

Programming remains a limiting factor. For example, the semiconductor industry responded to earlier hardware challenges by introducing processors with multiple cores (independent processing units, or IPUs). However, taking advantage of multiple IPUs requires programs to no longer be sequential, or even modestly parallel. Programmers are now faced with developing programs that can make use of many IPUs at once. That is a very difficult task: current software development and execution environments are not commensurately advanced to support this type of programming. The NSF's Exploiting Parallelism and Scalability (XPS) program is an example of an R&D program that focuses on these issues.

2. Software lifecycle cost is increasingly becoming the dominant fraction of the total information technology investment. Additionally, software activities continue to be a major factor in large-scale project delays, failures, cost overruns, and productivity bottlenecks. There is a general consensus that current approaches produce software that is difficult to maintain, upgrade, and scale, especially in the face of rapidly changing machine architecture and new system requirements. DARPA's Building Resource Adaptive Software Systems (BRASS) Program is an example of an R&D program that focuses on software sustainability and maintainability.

   NITRD helps by coordinating such activities through the HEC IWG and the Software Design and Productivity (SDP) Coordinating Group.

3. Progress in computing depends significantly on the level of expertise and skills in the workforce. Continuing emphasis on increasing student participation in computer science and STEM programs early on is required: far too few students take even a single computer science course during their K-12 education.[13] Engaging students early in STEM fields and retaining them through higher education remain a challenge.

   Workforce efforts are coordinated in the NITRD Social, Economic, and Workforce Implications of IT and IT Workforce Development (SEW) Coordinating Group.

[13] Marie desJardins, "The real reason U.S. students lag behind in computer science," Fortune Insider: Education, October 22, 2015. http://for.tn/1W6eoRw.

4. As noted by the 2015 PCAST review of NITRD, the domains in which IT is used have become preeminent in IT R&D. IT is now central in physical infrastructure, social computing, manufacturing, health care, transportation, and many other areas. As a result, computing is increasingly becoming multidisciplinary and collaborative. "Team science" is the field that focuses on this area of collaborative computing. However, there remain a number of challenges associated with team science. Recently, NSF sponsored the National Academies of Science to produce a report on the science of team science,[14] with the goal of assisting universities and research institutions in supporting the team science approach. Through the SEW Coordinating Group, NITRD is currently supporting an interagency effort addressing issues of funding, reviewing, and rewarding collaborative research.

9. ***Are there agencies or other interested parties who should be at the table in NITRD discussions, but are not? If so, why are they not there and how can this be changed?***

The NITRD Program welcomes participation by any agency whose research contributes to the overall goals of the NITRD Program and to the goals of one or more of the Program's Program Component Areas (PCAs). The PCAs are the major subject areas under which the projects and activities coordinated through the NITRD Program are grouped (for example, cybersecurity or large-scale networking).

Some agencies participate in NITRD Program activities, but the participants do not have significant investments in IT R&D to warrant becoming members. Other agencies may not be able to meet all the requirements for membership in the NITRD Program in terms of both the time commitment required of agency volunteers to participate in Working Group activities and the cost of membership. However, we encourage all these agencies to participate and to continue to stay involved and informed.

10. ***As was mentioned at our hearing, there are a few PCAST recommendations that relate to your office – can you please explain how you are implementing their recommendations?***

PCAST recommended that the NCO work with OSTP and the NITRD Working Groups to revise the PCAs and implement a review process to ensure that they reflect both the current nature of IT and major national priorities. The NCO is well on its way to implementing both of these recommendations.

PCAST also recommended that the NITRD Working Groups be restructured and processes implemented to ensure that they remain current and relevant, and evolve in response to national priorities. In addition, PCAST recommended that the NCO publish and publicly discuss the activities of the Senior Steering Groups (SSGs). The NCO is working with OSTP and the NITRD Subcommittee to develop and implement a process to restructure the groups, and to report on SSG activities through the legislatively mandated annual reports to Congress on the NITRD Program that are submitted as supplements to the President's budget.

---

[14] *Enhancing the Effectiveness of Team Science*, National Research Council, National Academies Press, April 2015, http://www.nap.edu/catalog/19007/enhancing-the-effectiveness-of-team-science.

11. *Where should Congress focus its federal IT R&D investments when it faces tough budget and deficit decisions and why?*

The President's annual budget request provides direct guidance to the Congress on where to focus federal IT R&D investments. The NITRD budget crosscut is currently about $4.1 billion. Choosing areas in which to focus investments is done by setting priority areas, both overall and within IT R&D. Thus, I see two questions: (i) What is the priority of federal IT R&D investments compared to other budget areas? (ii) What are the priorities in federal IT R&D investments? I address these two questions below:

i. Determining which areas should be priorities is exceptionally hard, but IT R&D should be a high priority. In its annual *Global Competitiveness Report*,[15] the World Economic Forum classified the United States in the 21st century as an "innovation-driven economy." The 2014-15 report notes that firms in countries with innovation-driven economies "must design and develop cutting-edge products and processes to maintain a competitive edge and move toward even higher value-added activities. This progression requires an environment that is conducive to innovative activity and supported by both the public and the private sectors."

   Many others have observed the role in our economy of innovation driven by IT R&D. The 2012 *Continuing Innovation in Information Technology* by the National Research Council[16] contains the often-cited "tire tracks" diagram that shows eight sectors in which combined public and private IT R&D have led to over $1 billion/year revenues – seven of which have >$10 billion/year revenues. These sectors are broadband and mobile, microprocessors, personal computing, Internet and the web, cloud computing, enterprise systems, entertainment and design, and robotics and assistive technologies. The 2013 book *The Entrepreneurial State: Debunking Public vs. Private Sector Myths*[17] by Professor Mariana Mazzucato of the University of Sussex lists ten components of the Apple iPad that benefited significantly from federal IT R&D investments: microprocessors, LCD displays, micro hard drives, lithium ion batteries, digital signal processing, cellular networks, the Internet, global positioning systems, multi-touch screens, and Siri. And, current IT R&D is leading to an astonishing future, as Erik Brynjolfsson and Andrew McAfee of MIT argue in their 2014 book *The Second Machine Age: Work, Progress, and Prosperity in a Time of Brilliant Technologies*.[18] Referring to accomplishments such as driverless cars, industrial robots that can be trained by physically guiding one through a series of steps, and metal additive manufacturing ("3D printing"), they observe that digital technologies will be as important and transformational to society and the economy as the steam engine was in the Industrial Revolution.

---

[15] *The Global Competitiveness Report 2015-2016*. World Economic Forum. http://www.weforum.org/reports/global-competitiveness-report-2015-2016.

[16] *Continuing Innovation in Information Technology*, Computer Science and Telecommunications Board. 2012: http://sites.nationalacademies.org/CSTB/CompletedProjects/CSTB_045476.

[17] *The Entrepreneurial State – Debunking Public vs. Private Sector Myths*, M. Mazzucato, Anthem Press, ISBN 978-0-857282-52-1, 2013.

[18] *The Second Machine Age: Work, Progress, and Prosperity in a Time of Brilliant Technologies*, E. Brynjolfsson and A. McAfee, W.W. Norton, 2014.

This breathtaking change is the result of both private and public IT R&D investments: investments from both sides are vital. The nonpartisan Center for American Progress policy institute argued in their December 2012 report *The High Return on Investment for Publicly Funded Research*,[19] that "[the] importance of innovation is not measured simply in new inventions. Innovation also requires dissemination through market adoption and public acceptance. While the private sector has a key role to play in making innovation happen, government must provide three key public-good inputs that allow innovation to blossom: investments in human capital, infrastructure, and research." Indeed, the World Economic Forum warns that, for innovation-driven economies, "[in] light of the recent sluggish recovery and rising fiscal pressures faced by advanced economies, it is important that public and private sectors resist pressures to cut back on the R&D spending that will be so critical for sustainable growth into the future."

Our future is being defined by the results of our IT R&D investments, and thus remains one of our top priorities.

ii. The 2015 PCAST *Report to the President and Congress Ensuring Leadership in Federally Funded Research and Development in Information Technology* identified several IT R&D priorities:

a. Cybersecurity, including foundational research that engages computer science, other engineering disciplines, and behavioral and social science both in protection – in particular for emerging application domains such as the Internet of Things – and on ways to anticipate and defend against attacks. They observed that research sponsors should work closely with all agencies, and with the private sector to facilitate transition from research and development to deployment and practice.
b. Health IT, including foundational research, promoting the leveraging of electronic health data in data analyses, and mechanisms encouraging accelerated deployment, testing, and evolution of translational health IT systems for clinical use.
c. Big data and data intensive computing with a broad R&D agenda that reflects the rapidly growing impact of this area on both the public and private sectors.
d. IT and the physical world, advancing R&D of new approaches for robust autonomy, security and reliability, integrative approaches to human integration, new sensing and interface technologies, and cognitive and social aspects of interactive physical systems.
e. The science, engineering, policy, and social understanding of privacy protection.
f. The systems and science of the interplay of people and computing, such as social computing, human-robot interaction, privacy and security, and health-related aspects of human-computer systems.
g. High-capability computing for discovery, security, and commerce, broadly scoped to include not only modeling and simulation, but also data-intensive and communication-intensive application domains.
h. Foundational "blue-sky" IT research incorporating both broad and novel approaches that will sustain computing far into the future.

[19] *The High Return on Investment for Publicly Funded Research*. Center for American Progress. https://www.americanprogress.org/issues/economy/report/2012/12/10/47481/the-high-return-on-investment-for-publicly-funded-research/.

Most would agree with this list. I find it compelling because it contains the two areas – high-performance computing and big data – that continue to change the way the rest of science and engineering is done; it contains the major challenge problems that involve IT and people; and it contains the two main threats to such systems: compromising cybersecurity and privacy. Prioritizing this set will support the near- and mid-future (such as aging in place, social computing,[20] smart cities, robust and secure critical infrastructure, Internet of Things, etc.) and the more distant future (with foundational "blue sky" research).

a. Can you recommend where savings can be achieved within the NITRD portfolio?

Savings can be achieved through coordination and collaboration. By working together, agencies can identify gaps in their research portfolios and ensure that results support each other's missions and goals. One occasion when this can happen is the annual planning meeting conducted by each NITRD working group. In an annual planning meeting, the member agencies review each agency's programs in that group's area, including results from the previous year and goals for the next year. On occasion, the agencies find opportunities to craft joint solicitations, such as the cross-agency solicitations in Cyber-Physical Systems (led by NSF and joined by DHS, DOT, NASA, and NIH). NITRD continues to look for ways to strengthen these coordination efforts to increase the efficiency of the member agencies' programs and portfolios.

12. ***The workforce needs of the IT field continue to grow and will need workers to fill those needs. Unfortunately, participation in computer science-related courses does not seem to be growing to meet the needs of employers. What are academic institutions and industry doing, and what more can they do to encourage student involvement and engagement in computing fields?***

Interest in computer science declined precipitously at universities after the "dot-com" collapse in 2000, but student enrollment figures have more than recovered. The Taublee Survey[21] reported that in 2014, the number of new undergraduate computing majors rose for the seventh straight year, with an increase of 18-20% compared to the previous year. They also reported double digit increases in bachelor's degree production. This is good news for employers, but there is still a growing gap between the number of students graduating and the number of available positions.[22] And, the K-12 pipeline is not as healthy: among the principals who report that their school offers computer science courses, 47% of them say that computer programming and coding are not part of the coursework.[23] There is a welcome response to this problem from technology leaders, nonprofits, and companies to expose more public school children to computer science. For example, Code.org, a nonprofit dedicated to expanding participation in computer science, particularly among women and underrepresented students, has launched the "Hour of Code" global movement that has reached tens of millions of

[20] Social computing focuses on the intersection of social behavior and computational systems, especially the collaborative and interactive aspects of online behavior.
[21] 2014 Taulbee Survey. Computing Research News 27(5), May 2015.
[22] "What's wrong with this picture?" Code.org, https://code.org/stats.
[23] Landscape of K-12 Computer Science Education in the U.S. Gallup. http://csedu.gallup.com/home.aspx.

students in over 180 countries. Each student participates in a one-hour introduction to computer science that is designed to demystify code and show that anybody can learn the basics. In addition to Code.org's efforts, it is worth noting that NSF funds academic researchers to prototype courses (such as the "Exploring Computer Science" and "Advanced Placement Computer Science Principles" courses) and teacher professional development. Local governments and districts are also responding: Cities like New York and San Francisco have committed to offer computer science to students in all grade levels, and Chicago has said that computer science will eventually become a high-school requirement.[24] Moreover, several states are either examining or already allowing computer science to count towards high school math requirements. This has the potential of increasing interest in computer science in high school with the possibility of that interest leading to involvement in college.[25]

a. ***Do you believe that the development and application of IT related systems, services, tools, and methodologies have boosted U.S. labor productivity more than anything else in recent decades? If so, why do you believe this to be the case?***
Will the IT industry continue to increase the productivity of the U.S. workforce?

IT-related systems, services, tools, and methodologies have not only boosted U.S. labor productivity, but have also increased efficiency in recent decades. With smartphone and tablets coupled with fast wireless network access, communication has become more efficient and secure. Not only has this increased productivity and efficiency, it has also reduced environmental waste, such as overconsumption of power, paper waste, etc. It has also empowered users to collaborate using online virtual meeting tools to be productive regardless of team location. The IT industry continues to promise an increase in productivity by encouraging innovative apps and online connected devices (i.e., the Internet of Things, or IoT) that enable newer ways to do efficient business.

13. ***In previous NITRD hearings, we have heard that NIT's role in national security, national competitiveness, and national priorities is far broader than high-performance computing alone. Can you expand on how the NIT field has influenced or continues to influence national security and competitiveness?***

As noted in the 2015 PCAST review of NITRD, "Information technology (IT) drives the modern world. Nearly 80 percent of the households in the developed world have access to the Internet, and nearly half of the world is connected. IT empowers scientific inquiry, space and Earth exploration, teaching and learning, consumer buying and selling, informed decision-making, national security, transportation, advanced manufacturing, and protection of the environment. The Bureau of Labor Statistics projects that more than half of all new science, technology,

[24] Phuong Le, "Growing push to expose more students to computer science," AP, December 2, 2015 3:15 AM EST.
[25] For example, see Ohio's graduation requirement for math that allows computer science to count: http://education.ohio.gov/Topics/Ohios-Learning-Standards/Mathematics/Math-Graduation-Requirements. Also, see the November 24, 2014, *US News and World Report* article, "Making it Count: Computer Science Spreads as Graduation Requirement," http://www.usnews.com/news/stem-solutions/articles/2014/11/25/making-it-count-computer-science-spreads-as-graduation-requirement.

engineering, and mathematics (STEM) jobs will be related to information technology. It is difficult today to imagine a major economic sector, governmental function, or societal activity that does not directly or indirectly benefit from advances in information technology."

Similarly, it would be difficult to overstate the importance of IT for national security. Regarding national defense, the United States has a high-technology military; virtually every aspect depends on IT and computational capability. The modern U.S. military is based largely on the availability of technological advantages because it must be capable of defeating a varied range of adversaries in multiple simultaneous areas throughout the world. IT—such as communications technologies, satellites, state-of-the-art weapons platforms, drones—gives the U.S. military a high confidence in its ability to prevail in any conventional fight.

IT also enhances domestic security. Examples include port cargo screening, security surveillance and video analytics, digital fingerprint analytics, and data analysis for intelligence.

As noted in the 2009 White House Cyberspace Policy Review,[26] the globally interconnected digital information and communications infrastructure known as "cyberspace" underpins almost every facet of modern society and provides critical support for the U.S. economy, civil infrastructure, public safety, and national security. Yet, cybersecurity risks pose some of the most serious economic and national security challenges of the 21st century. The United States faces the dual challenge of maintaining an environment that promotes efficiency, innovation, economic prosperity, and free trade while also promoting safety, security, civil liberties, and privacy rights.

The next-generation IT infrastructure and capabilities under development will enable continued U.S. economic competitiveness through leadership in economic innovation and scientific discovery (e.g., alternative energy sources, technologies, and supply systems; personalized bio-genetic medicine; space exploration) and education and quality of life (e.g., universal learning technologies and access to information; virtual environments for collaborative work and social interaction; intelligent systems for independent living; life-saving transportation systems; transparent government).

IT will continue to enable integration of computing with people and the physical world and will be central to achievements in security, privacy, health, transportation, manufacturing, robotics, social computing, and smart infrastructure, addressing many of the most important national priorities.

14. ***Do you believe that industry should be more engaged in the NITRD program? If so, in what way and why?***

Industry engagement in the NITRD Program continues to be very important. The NITRD Program uses a variety of mechanisms to reach out to researchers, private-sector developers, resource providers, and end users. Examples include two groups under the LSN CG, the Joint Engineering Team (JET) and Middleware and Grid Interagency Coordination (MAGIC) group,

[26] *Cyberspace Policy Review: Assuring a Trusted and Resilient Information and Communications Infrastructure*, May 2009, https://www.whitehouse.gov/assets/documents/Cyberspace_Policy_Review_final.pdf.

which have academic and industry participation; the Faster Administration of Science and Technology Education and Research (FASTER) Community of Practice (CoP), which seeks exchanges of information with the private sector and new technologies to streamline the management of Federal research; and the multisector NITRD research workshops held in all the PCAs.

The relationship between industry and Federal agencies in the NITRD Program, such as NSF, NIST, DHS, DARPA, and DOE, is essential to the development and demonstration of new technologies and applications. Industry can provide insight into real-world problems and access to infrastructure. Industry has contributed equipment and applications to develop both leading-edge demonstrations and prototypes of new technologies and applications by Federal agencies, thereby accelerating development and technology transfer. One example of coordination and engagement of industry includes the NIST Global City Teams Challenge and NIST Public Working Groups on topics such as Cyber Physical Systems, Big Data, and others.

Research in IT is increasingly interdisciplinary, requiring collaboration with industry researchers to make advancements. Industry participation in workshops is an important way for researchers, users, and industry to work together to identify needs for future IT technologies and bring into focus the research topics that warrant Federal agencies' investments. It is important to include more than just the large NIT companies: participation from smaller companies and companies that leverage or depend upon NIT R&D is important as well.

Industry can also work with the Federal Government to address national priorities in areas such as defense, the economy, health and human safety, education, and quality of life. It is worth noting that in some technical areas, such as cybersecurity and networking, neither the government nor industry can do it alone. Industry and government are mutually dependent on developing and implementing solutions that are compatible across sectors.

a. Does your office have any plans to expand outreach to industry?
The NCO is working with the NITRD Working Groups to identify and pursue opportunities to become more engaged with industry.

15. ***What are the benefits of having industry engaged in the NITRD program?***

Industry is engaged in the NITRD program in several ways, each with significant benefits to IT research and development and to the commercial, public, and research sectors. This involvement accelerates the development and commercialization of new IT technology.

Industry is involved in workshops held by the NITRD community to engage user communities in identifying research needs in IT technologies and applications. This assures that industry needs and concerns are addressed in developing plans and programs for IT research at the Federal agencies.

In some instances, industry is involved in the IT research supported by the Federal agencies. This provides industry with direct experience in development of new IT capabilities and with a knowledge base useful for the development of new commercial capabilities.

Industry is involved in Federal agency and community demonstrations and prototypes of emerging IT technologies. Industry is asked to donate equipment and services in the development of demonstration and prototype programs. Industry involvement provides an early and immediate knowledge of the new capabilities and technologies that are being developed. Industry involvement in community demonstrations of new IT technologies provides industry with a working relationship with the communities and users who will need the IT technologies and capabilities in the future.

Some Federal agencies, including DoD, DARPA, DHS, DOE, and NSF, provide funding to industry to support initial development, demonstration, and commercialization of new IT technology and applications. This provides industry with the resources to develop a technology to the commercial stage and with the knowledge base to support continuing commercialization of the new technologies.

16. ***In your testimony, as an example of benefits to basic internet technology research, you note the evolution of DARPA's ARPANET to NSF's NSFNET and then to the commercial Internet that we all are familiar with today. Can you speak to additional significant examples that demonstrate the result of federally funded research and development through the help of the NITRD program?***

There are a number of examples of the NITRD Program facilitating federally funded research in basic Internet technologies that have been beneficial to advancing science and creating economic opportunities. These are highlighted further below, but first I would like to set this response in a broader context.

Some successes are clear only in retrospect since it can take decades to see results and trace the results back to basic research. To illustrate, see the updated "tire tracks" graphic from the Computer Science and Telecommunications Board's 2012 report *Continuing Innovation in Information Technology*[27] that shows, for example, the relationship of 40 years of fundamental research in networking technology to today's $10 billion Internet and Web sector market that includes firms like Google, Cisco, Amazon, Juniper, Facebook, eBay, Akamai, and Yahoo!.

Additionally, one needs to recognize that the U.S. research enterprise is complex, and there is no single formula that guarantees the right way to steer investments in basic research to successful outcomes. The National Academies report *Furthering America's Research Enterprise* summarizes this well:[28]

> To understand how federal investments in scientific research result in societal benefits, it is necessary to understand the American research enterprise as a system that must be viewed in relation to the innovation system in which the discoveries produced by research are used to

[27] *Continuing Innovation in Information Technology*, Computer Science and Telecommunications Board. 2012: http://sites.nationalacademies.org/CSTB/CompletedProjects/CSTB_045476.
[28] *Furthering America's Research Enterprise*, National Academies of Science. 2014: http://www.nap.edu/catalog/18804/furthering-americas-research-enterprise.

> develop new technologies and other innovations. Without this system-level understanding, policies focused on relatively narrow objectives—such as increasing university patenting and licensing of research discoveries or reducing the funding for certain disciplines or types of research—could have undesired consequences.
>
> Such an understanding, however, is not easily achieved. Discoveries often emerge from the highly complex and dynamic research enterprise as a result of the system as a whole. They are not due to any individual component of the system and thus cannot be predicted from the nature of the components. Nor can one predict how the knowledge from a research discovery might eventually be taken up and used, by whom, and in what ways that will lead to a transformative innovation. Indeed, research discoveries and the innovations to which they lead often arise serendipitously. The complexity of the research and innovation systems is why attempts to trace major innovations back to their original supporting research have rarely if ever revealed a direct flow of money in, value out. (p. 120)
>
> ....The committee concludes that societal benefits from federal research can be enhanced by focusing attention on the three crucial pillars of the research system: a talented and interconnected workforce, adequate and dependable resources, and world-class basic research in all major areas of science. (p. 121)

To exemplify how the NITRD Program contributes to this process, I will use advanced networking as an example. NSF and DARPA are two NITRD agencies that fund basic research. They typically bring the user community together to solicit requirements for some area of research, and based on these inputs, will fund university research on the desired capabilities. Because the research is federally funded, information is in the public sector and shared. As research progresses and new capabilities are created, users learn about the capabilities and begin to apply them in their local environments by building prototypes (often at university campuses). When the prototypes are ready, they conduct demonstrations that the larger user community can observe. Once a capability is successfully demonstrated, the larger user community will start adopting it in their networking technologies and making further refinements. In some cases, the university researchers, or others knowledgeable about the research, will seek to commercialize the technology and start companies to do so. If it is a promising technology, other commercial interests may seek to improve it or introduce innovations that produce a next-generation version of the technology.

This process occurred in networking, starting with the federally funded research on network links conducted at universities. In the early days, people had to switch out links manually. Then Cisco routinized most of that labor-intensive effort by putting capabilities for network links on chips. This was an important innovation, but when updates were needed, users still needed to update the software manually. Then, Juniper Networks introduced Field-Programmable Gate Arrays (FPGAs), which allowed the updates to be done programmatically. Both Cisco and

Juniper Networks became successful technology companies. They are joined today by many others, including, e.g., Akamai, which provides a highly distributed cloud optimization platform for web traffic control technologies. Akamai's technologies are based on research funded at MIT by NSF and the DOD, through DARPA and the Army Research Office. And, now, a new generation of networking technologies has emerged through investments by the U.S. Government (notably NSF): Software-Defined Networks (SDN) and Named Data Networking (NDN).

Through the NITRD Program, federal agencies share information with each other about their research programs. Sometimes they will collaborate on workshops, principal investigator (PI) meetings, or sponsor conference sessions to advance knowledge more broadly about the research. The Software-Defined Networks (SDN) workshops in 2013 and 2015, coordinated through the NITRD LSN CG, are recent examples of this. Outreach to the user community and demonstrations of new capabilities for SDN and big data flows across 100-gigabit networks were also recently coordinated by the LSN CG, highlighted by the operations of SCinet at the Super Computing 2015 (SC15) conference.[29]

> SC15 is once again hosting one of the most powerful and advanced networks in the world - SCinet. Created each year for the conference, SCinet brings to life a very high-capacity network that supports the revolutionary applications and experiments that are a hallmark of the SC conference. SCinet will link the convention center to research and commercial networks around the world. In doing so, SCinet serves as the platform for exhibitors to demonstrate the advanced computing resources of their home institutions and elsewhere by supporting a wide variety of bandwidth-driven applications including supercomputing and cloud computing.
>
> Volunteers from academia, government and industry work together to design and deliver the SCinet infrastructure. Industry vendors and carriers donate millions of dollars in equipment and services needed to build the local and wide area networks. Planning begins more than a year in advance of each SC conference and culminates in a high-intensity installation in the days leading up to the conference.

Additional examples that demonstrate the result of federally funded R&D through the help of the NITRD program include how we are:

- Currently transitioning from the current Internet to SDN networking.
- Currently transitioning to cloud resources and distributed computing.
- Coordinating each generation of high-end computing technology.
- Coordinating big data transfers for scientific research (e.g., Large Hadron Collider, astronomy community, bioinformatics, real-time instrument control, such as for Tokamak control and management, and so on).

[29] SC15 The International Conference for High Performance Computing, Networking, Storage and Analysis. November 15-20, 2015, Austin, TX.
http://sc15.supercomputing.org/sites/all/themes/SC15images/SC15ConferenceProgramFinal11.14.pdf.

- Coordinating across agencies and with industry, academia, local communities, and governments at all levels (local, state, federal, and internationally) on the NIST Global City Teams Challenge, Smart and Connected Communities Framework, and US IGNITE.
- Coordinating on research on cyber-physical systems and robotics.

Lastly, I would like to cite relevant closing remarks from the NITRD 20th Anniversary Symposium, held in 2012, on the NITRD Program's contributions:[30]

> At today's Symposium, we've been treated to extraordinary presentations describing both the progress and the promise of our field. We've heard about human language technology; autonomous vehicles; sensing; privacy; security; software; scientific discovery; data-driven approaches to health, to science, to reasoning. We've learned that advances in computer science have an extremely broad role. In medicine, that role certainly includes electronic health records, but it also includes evidence-based medicine, automated diagnosis, and the complete instrumentation of the body. In energy and sustainability, that role certainly includes high performance computing as utilized by the Department of Energy's Office of Science, but also sensors in homes for energy management: smart homes and smart offices as the leaf notes of the smart grid, a focus of DoE's Office of Energy Efficiency and Renewable Energy. In transportation, we will eventually see the widespread use of autonomous vehicles, but we are already benefiting from capabilities such as adaptive cruise control, anti-lock brakes, and automated stay-in-lane systems that can increase the utilization of existing highways, and continued advances in logistics that allow companies such as Zipcar to increase the utilization of vehicles, better amortizing the economic and environmental costs of their production.

17. ***What important research areas do you believe the NITRD program should focus on in the future?***

The 2015 PCAST recommendations provided an excellent set of recommended research areas for the future. These included cybersecurity, health IT, big data and data-intensive computing, cyber-physical systems, privacy, cyber-human systems,[31] high-capability computing, and foundational IT research. In my testimony, I called out three areas where I would like to see NITRD have an increased focus and highlight them here again:

---

[30] NITRD 20th Anniversary Symposium. 2012. Closing remarks https://www.nitrd.gov/nitrdsymposium/speakers/closing.aspx.

[31] As defined by PCAST, cyber-human systems "consist of large-scale network devices that allow people to communicate, collaborate, and carry out activities of normal life through online platforms" (p. 14) and "...[encompass] communication and coordination of people, computational systems and methods supported by people, and socially intelligent devices and systems, in addition to human use of computational services." (p. 34) See *Report to the President and Congress Ensuring Leadership in Federally Funded Research and Development in Information Technology*. August 2015, President's Council of Advisors on Science and Technology: https://www.whitehouse.gov/sites/default/files/microsites/ostp/PCAST/nitrd_report_aug_2015.pdf.

- Big data and data-intensive computing;
- High-capability computing for discovery, security, and commerce; and
- Cyber-human systems.

My testimony explains why I called these three out. In brief, I called out the first two because they have such a large impact both within and outside of the NITRD Program agencies: both call for an all-of-government approach. I called out cyber-human systems because many of the new directions in which NIT R&D is being applied have people in the loop: cross-agency collaboration is required to make progress here as well.

Questions submitted by Rep. Randy Hultgren, Member, Subcommittee on Research and Technology

1. **How should we improve our interagency working groups at NITRD to better serve our research capabilities and connect the core capabilities certain agencies may have?**

   Under the NITRD Program, there are close to 20 groups coordinating across agencies on IT R&D plans and activities. To be successful requires hard work, but there are areas where improvements could help make interagency coordination more efficient and effective.

   PCAST recommended improving the processes by which the NITRD groups are established, monitored, and terminated, and clearly defining each group's relationship to the NITRD PCAs. Using charters to create and manage the lifecycles of the groups, including defining what type of group each one should be (e.g., Working Group, Task Force, etc.), is an excellent process improvement that the NITRD NCO is implementing.

Questions submitted by Rep. Daniel Lipinski, Ranking Member, Subcommittee on Research and Technology

1. ***In his hearing testimony, Dr. Seidel recommended better coordination between the NITRD Subcommittee and Committee on Science Subcommittees under the National Science and Technology Council. Do you agree with this recommendation? If so, what steps do you believe the NITRD Subcommittee can take to increase such coordination? If not, why not? In answering this question, please describe how the NITRD Subcommittee currently coordinates with the scientific users of information technology so that their needs and expertise are represented in NITRD priorities.***

   Yes, I do agree with Dr. Seidel. NITRD would welcome better coordination with other groups within the National Science and Technology Council, and will work through the NSTC to identify potential partners.

   For the most part, the coordination between domain scientists and agency program officers and scientists takes place at the agency level. For example, the Department of Energy's ESnet works on a continuing basis with science discipline communities to project developing and future needs for IT resources of the science discipline communities. ESnet does this by holding periodic workshops with each science discipline expected to have growing needs for IT resources: the resource needs of each science discipline are updated every three years. These resources include networking that supports data movement and real-time modeling needs, data storage, access to both centralized and distributed computational resources, security, applications support, and virtual collaboration environments. The science discipline communities they support include, but are not limited to, the Large Hadron Collider (LHC) program; astronomical data, modeling, and real-time collaboration; tokamak modeling and real-time analysis; bioinformatics; earthquake modeling; weather prediction and modeling; and climate change analysis.

   Other coordination takes place at the NITRD Working Group level through meetings and workshops. This coordination includes, but is not limited to, working with domain scientists for high performance computing and data analytics. For example, to develop a federal strategic plan in cybersecurity, the Cybersecurity and Information Assurance R&D Senior Steering Group (CSIA R&D SSG) has met with lawyers, social scientists, and representatives from the U.S. Census Bureau and the National Library of Medicine. Such coordination happens as needed. As we write new charters for our groups, we are including such coordination activities in the groups' charters.

2. ***One of the issues we have heard raised in previous hearings and PCAST reports is how exactly to count research infrastructure as part of the NITRD budget. The demand and cost for infrastructure is high and growing, accounting for a significant fraction of the total NITRD budget. However, as I understand it, there remain open questions about what to count and not to count, for example the large databases maintained by many of the mission agencies such as NASA. How should infrastructure be counted under NITRD, and do you have any processes in place to develop and maintain clear categories? Would there be value in a strategic plan or***

roadmap covering all of NITRD infrastructure, or are the needs and types of infrastructure too diverse?

The confusion arises, in part, because of the ambiguous meaning of "NITRD infrastructure." Some infrastructure, such as NSF's Global Environment for Networking Innovations (GENI) project, is used to conduct IT research that further advances IT. Other infrastructure makes heavy use of leading-edge IT R&D (i.e., "leadership-class and production HEC systems"), but the research it supports is, for the most part, outside of the NITRD portfolio. Both are important, but should be treated separately. Further confusion arises because some infrastructure is reported in the same category as the research it supports (e.g., in CSIA), yet HEC infrastructure is reported separately from HEC R&D. Both of these issues have been brought up in recent PCAST reviews of NITRD.

Following the PCAST recommendations, NITRD is revisiting the way infrastructure is reported in the annual, legislatively mandated NITRD Budget Supplement.

3. ***The NITRD Program represents a very large and diverse investment in many topics and many fields within science and engineering. In recent years, the NITRD agencies have undertaken more narrowly focused strategic plans, for example in cybersecurity, and now in privacy and big data. When not specifically directed by Congress, how do the NITRD subcommittees choose which areas will most benefit from a strategic plan? Is there still value in a NITRD-wide strategic plan covering the full $4 billion investment? Is some kind of planning or vision document other than a strategic plan more useful and appropriate?***

There are several reasons why a group will undertake developing a strategic plan. In some cases, it is because Congress directs us to do it, which is the case for the 2015 cybersecurity strategic plan that is currently in draft. In other cases, interagency progress makes it clear that it is time to produce a strategic plan, which is the case with the Big Data strategic plan currently in draft. In yet other cases, a PCAST recommendation resonates with a NITRD Working Group that then takes on the responsibility of launching and coordinating a strategic planning activity, as with the national privacy research strategy effort.

In response to a PCAST recommendation, NITRD did develop a strategic plan, which was released in 2012. It is available at www.nitrd.gov/Publications/StrategicPlansAll.aspx. In addition, NITRD has reported on strategic priorities, plans, and activities in the annual NITRD Budget Supplement document. Starting in 2016, NITRD Program activities will be expanded upon in a separate report that will describe the key focus areas and activities of the Program over the previous year, and will include information about our strategic planning efforts.

Appendix A – NITRD Agencies

NITRD Member Agencies

Department of Commerce (DOC)
- National Institute of Standards and Technology (NIST)
- National Oceanic and Atmospheric Administration (NOAA)

Department of Defense (DoD)
- Defense Advanced Research Projects Agency (DARPA)
- National Security Agency (NSA)
- Office of the Secretary of Defense (OSD)
- Service Research Organizations (Air Force, Army, Navy)

Department of Energy (DOE)
- National Nuclear Security Administration (DOE/NNSA)
- Office of Electricity Delivery and Energy Reliability (DOE/OE)
- Office of Science (DOE/SC)

Department of Health and Human Services (HHS)
- Agency for Healthcare Research and Quality (AHRQ)
- National Institutes of Health (NIH)
- Office of the National Coordinator for Health Information Technology (ONC)

Department of Homeland Security (DHS)

Department of Justice (DOJ)
- National Institute of Justice (NIJ)

Environmental Protection Agency (EPA)

National Aeronautics and Space Administration (NASA)

National Archives and Records Administration (NARA)

National Reconnaissance Office (NRO)

National Science Foundation (NSF)

NITRD Participating Agencies

Department of Commerce (DOC)
- National Telecommunications and Information Administration (NTIA)

Department of Defense (DoD)
- Military Health System (MHS)
- Telemedicine and Advanced Technology Research Center (TATRC)

Department of Education (ED)

Department of Health and Human Services (HHS)
- Centers for Disease Control and Prevention (CDC)
- Food and Drug Administration (FDA)
- Indian Health Service (IHS)

Department of Interior (Interior)
- U.S. Geological Survey (USGS)

Department of Justice (DOJ)
- Federal Bureau of Investigation (FBI)

Department of Labor (DOL)
- Bureau of Labor Statistics (BLS)

Department of State (State)

Department of Transportation (DOT)
- Federal Aviation Administration (FAA)
- Federal Highway Administration (FHWA)

Department of the Treasury (Treasury)
- Office of Financial Research (OFR)

Department of Veterans Affairs (VA)

Federal Communications Commission (FCC)

Federal Deposit Insurance Corporation (FDIC)

General Services Administration (GSA)

Nuclear Regulatory Commission (NRC)

Office of the Director of National Intelligence (ODNI)
- Intelligence Advanced Research Projects Activity (IARPA)

U.S. Agency for International Development (USAID)

U.S. Department of Agriculture (USDA)
- National Institute of Food and Agriculture (NIFA)

Appendix B – NITRD Working Groups

Interagency Working Groups (IWGs)

Cyber Security and Information Assurance (CSIA)

High End Computing (HEC)

Coordinating Groups (CGs)

High Confidence Software and Systems (HCSS)

Human Computer Interaction and Information Management (HCI&IM)

Large Scale Networking (LSN)
- LSN Teams:
  - Joint Engineering Team (JET)
  - Middleware and Grid Interagency Coordination (MAGIC) Team

Social, Economic, and Workforce Implications of IT and IT Workforce Development (SEW)
- SEW Teams:
  - SEW-Collaboration Team
  - SEW-Education Team
  - Social Computing Team

Software Design and Productivity (SDP)

Video and Image Analytics (VIA)

Senior Steering Groups (SSGs)

Big Data (BD)

Cyber Physical Systems (CPS)

Cybersecurity and Information Assurance R&D (CSIA R&D)

Wireless Spectrum R&D (WSRD)

Communities of Practice (CoPs)

Faster Administration of Science and Technology Education and Research (FASTER)

Health Information Technology R&D (HITRD)

Responses by Dr. Gregory D. Hager

Questions submitted by Rep. Barbara Comstock:

1. *Can you explain how national user high performance computing facilities help the US maintain global leadership in research and innovation?*

There are many ways in which high performance computing (HPC) facilities directly contribute to maintaining US global leadership in research and innovation. In 1985 the NSF started a national "HPC centers program" that not only kept the US at the forefront in many areas of science, but it became a model for the world, with many nations following suit. Since that time, in virtually every area of research (not only in science and engineering but increasingly in the arts and humanities), in virtually every area of industry (across many market sectors from aerospace to energy to medicine and big pharma), and even in nontraditional areas of application such as sports (major league baseball teams now purchase supercomputers for "Big Data" analysis to develop strategies to improve their team's performance), HPC is a valuable tool to advance our ability to address complex problems across science and society. Those nations with more capable facilities, and with the tools and technical/scientific expertise to take advantage of them, are able to advance faster, addressing more complex problems, with more relevance to real-world solutions for society, than those without them. Simply put, a vibrant high performance modeling, simulation and data science ecosystem is essential for global leadership in science, engineering, and innovation for the US, and for all advanced nations.

There are many examples of breakthroughs in science and engineering that could not have been addressed in any other way than through HPC/Big Data approaches (as noted below, these two approaches go together, but now I just use "HPCD" for brevity). Our ability to understand complex black hole phenomena in the universe, or to design a more efficient jet engine, is dependent on applications, and future advances, of HPCD.

All HPCD centers have similar cases to make, but I will focus on NCSA as I am most familiar with it as its director. For three decades NCSA has been the home to globally leading advances in science, engineering, and industrial R&D. Most recently, its Blue Waters facility, the most powerful in the academic world, has been used for innumerable discoveries in basic research (e.g., How does the AIDS virus work at the molecular level? Large-scale Blue Waters simulations combined with data from light sources have shed new light on this virus.) and advances in applied engineering (e.g., How can one desalinate water cheaply and effectively using nanopores? Large-scale Blue Waters simulations showed a new way to achieve this.) These and many other investigations could not be done at the same level of depth, or even at all, on less capable facilities. *Many more challenging studies and astounding discoveries yet await far more powerful HPCD systems.*

NCSA has had a vibrant private sector program serving one-third of the Fortune 50 to advance US industrial competitiveness. And out of NCSA's innovative HPC environment was born the graphical web browser, Mosaic, that led to commercial web browsers such as Internet Explorer that have powered many US high tech regions such as Silicon Valley, and are estimated to have added more than a trillion dollars to the world economy. *HPCD centers have a significant,*

direct, and immediate impact on US national economic competitiveness, and their impact will increase as HPCD systems become more capable and more available to US industry.

As a center where advances in HPC and Big Data will continue, NCSA (and other HPCD centers) continues to be the home of many future advances that will help maintain US global leadership in both research and innovation. To illustrate, I give one example that combines discovery science, practical engineering, and economic leadership, all in one: turbulence in jet aircraft engines. The basic equations governing this process were written down in 1810 but they have eluded detailed solutions for two centuries. Advances in HPC in the coming decade (creating a machine roughly 100x Blue Waters, and applications that can effectively use it) could enable US companies, such as NCSA industrial partner General Electric, to effectively model this process, resulting in more efficient jet engines. Even an increase in efficiency as small as 1% would lead to many billions of dollars in savings in US jet fuel costs. In order to achieve such results, an integrated approach combining multiple aspects of the National Information Technologies (NIT) ecosystem, including collaborations of scientists and engineers from academia and industry to develop to new science, new algorithms, and new software, combined with adequate access to new and more capable HPC facilities, will all be required.

For these reasons, the recent National Strategic Computing Initiative (NSCI) should be seen not only as critical for the nation's international scientific leadership, but even more importantly, as a critical vehicle for maintaining US economic leadership in a highly competitive world. NSCI rightly singles out NSF as a key integrator of the NIT ecosystem, with DOE playing a key leadership role in the march towards useable exascale HPC systems. However, other nations are not standing still, and are increasing their investments significantly in their own HPC ecosystems. For example, *China overtook the US lead in supporting the most world's most powerful HPC system five years ago, and has maintained that lead every since*. Other countries, including Russia and Japan, have programs to invest aggressively in this space for the reasons above. Europe has a long-term funded program for HPC applications and a comprehensive initiative to understand the human brain, whose foundation is built on the best HPC systems. Hence, it is vital to the interests of US leadership in science, engineering, and industrial competitiveness that NSCI succeed. NITRD, groups under the Committee on Science, and the participating agencies of the NSCI will need to work together with Congress in order for the US to maintain its current overall leadership. (I believe some changes should be made to the way these activities are coordinated to better connect the NIT communities with other scientific communities. See Q1 from Rep. Hultgren below for more detailed suggestions on this topic.)

2. *In your testimony you mentioned that NCSA is too deeply engaged in numerous "big data" projects. What can be done to lighten the burden placed on NCSA while generating the same volume of research without compromising results?*

Thank you for giving me the opportunity to clarify, as I meant to imply the opposite point (see below for my actual written text)! Traditional HPC centers, including NCSA, *are now (and should be) deeply engaged in big data projects*. My primary point was to highlight the important role that HPC centers do, and need to, play in Big Data for the nation. Big Data implies Big Compute.

Examples of this include deep machine learning, image processing and graph analytics methods that are highly computationally intensive. HPCD Centers such as NCSA have enormous computing, storage, and networking capabilities, as well as critical expertise in managing, storing, serving, linking, preserving, computing on big data that takes decades to build up.

The important role of HPCD centers should be explicitly recognized, and further, they are natural sites to build upon for many aspects of Big Data. Doing so will leverage existing concentrations of expertise and facilities, creating many synergies while also lowering overall costs as infrastructure, staff, and services needed for HPC can also be used for big data. For example, the University of Illinois invested more than $100M to build and operate a facility for the NSF Blue Waters project. The same facility, and the expertise associated with it, is being used to support the data storage, services, and computing needs for the NSF-DOE Large Synoptic Survey Telescope (LSST), currently under construction for about $700M. *Exploiting such synergies lowers the overall costs of the LSST construction and operations while just as importantly ensuring appropriate technical and management expertise can be leveraged for effective operations.*

Further, it is difficult and expensive to move big data, so using HPC centers as data services centers (HPCD!) exploits the local computing capacity of HPC centers, and eliminates or reduces the costs (in terms of both complexity and monetary costs) of transporting data. Large HPCD centers cost millions of dollars per year just for electricity, and a substantial fraction of that is for managing data. *One should keep data near computing, and not move it unless one has to!*

For the record, in my written testimony that led to this question, I wrote:

> *As with all major national computing centers, NCSA too is deeply engaged in numerous "big data" projects, illustrating a key point: big data and big computing go hand-in-hand; one is intrinsically integrated with the other.*

3. *How can the problems you mention in your written testimony that are beyond reach of any individual group, discipline, or approach be brought into reach?*

Many complex problems face science, industry and society today, such as "How can we maximize food production in the Midwest while lowering costs?", "How can we predict earthquakes with much more precision, what are the proper mitigation methods to use for buildings, and how to enable much more effective emergency response?", "How can new materials be developed that will revolutionize the electronics industry, speeding computing while lowering power requirements, each by factors of thousands or millions?", or "How do bacteria or viruses operate at the molecular level and what drugs will be effective without side effects?" and so on. *All of these questions are, in principle, amenable to computational and big data approaches, but to answer them effectively, with definitive real-world answers, requires not only major advances in computational and big data capabilities, but also the integrated expertise of many different areas of science and engineering.*

In order to accelerate advances to such problems, investment in HPC/Big Data facilities alone is not sufficient. A comprehensive program is needed that enables interdisciplinary grand challenge teams to form across the necessary research communities (and critically, to train students and young scientists to work in these environments; see below), tightly coupled to programs that simultaneously advance new computing and data facilities, new algorithms, and new software tools. Programs are needed that bring grand challenge research communities together around such complex problems, hand-in-hand with programs that advance the technologies themselves. I believe this is so important that I have recently organized a new directorate at NCSA around six thematic grand challenge areas, including a "Culture and Society" area that among other things will study how collaborations operate.

Such a "grand challenge communities" program would likely need to cut across agencies as well, as the problems at stake require groups that may traditionally be funded by NSF, NIH, DOE, and so on. The National Strategic Computing Initiative (NSCI) would be a natural vehicle to develop such a program, which would likely require specific appropriations to fund effectively. While NSF has been called out specifically as the key leadership agency to help integrate different parts of the ecosystem for such programs, the NCO, with appropriate input from the Committee on Science, should play major role in bringing together agencies to address such issues.

I would be happy to discuss these issues further, as I have spent much of my career on developing such programs both as a member of various science communities, and during my time at NSF.

4. *What benefits would broadening the ecosystem to include major digital instruments and their coordination reap? How can the investment in the NIT infrastructure be invested more coherently?*

There is a both a strong need and a major opportunity to include major digital instruments and experimental facilities (e.g., MREFC projects in NSF parlance) as an integral part of the NIT ecosystem. *Science and innovation could be better served and significant costs savings could be realized if this were done effectively.* Key elements of the reasoning for this include:

- Major experiments (e.g., light sources, accelerators, etc.), instruments (e.g., LIGO, IceCube, etc) and/or observing system projects (e.g. NEON, LSST, ALMA, etc.), are highly digital in nature and generally use a very significant amounts of their budgets to build one-of-a-kind NIT infrastructure just for their instrument. They each generate huge amounts of data, each require massive computing, storage and high speed networking, and each require a critical mass of NIT expertise. Often the projects are "more silicon than steel" meaning the traditional "steel and glass" instrument, e.g., the telescope, is now merely a peripheral to the significant NIT infrastructure needed to operate it. But these instruments do not each need fully independent investments and operations for this infrastructure.
- The technologies that collect/generate data in these instruments are advancing very rapidly so that future generation instruments (e.g., planned upgrades to DOE light

sources, such as Argonne's Advanced Photon Source) will require peta-to-exascale computing capabilities just for data analysis. Therefore, this problem is intensifying rapidly. It will not be feasible to build independent HPC and data facilities for each such instrument. *They must be planned and developed together over decadal timescales.*

- However, current practice still has most such large instrument projects developing their own NIT infrastructure. While the instrument may cost of order $500M to $1B or even significantly more to build, and similar amounts to operate, large fractions of the costs of each instrument (hundreds of millions of dollars) are for their NIT infrastructure alone. Thus, such projects have a tendency to "reinvent the wheel" when they could instead leverage or combine similar investments and expertise at major HPC/Big Data facilities. (The LSST, described above, is building its data and computing service with NCSA exactly for these reasons, and is a rare exemplar for what could be done by other projects.)
- Scientific grand challenge problems (discussed above) increasingly require data from not just one, but many such instruments and sensor networks, along with peta-to-exascale computing capabilities for simulation and modeling combined with observed data. But due to the practice of each instrument project developing its own NIT infrastructure independently, the ability to combine data from different instruments is inhibited, making it harder for grand challenge communities to develop a vaccine for a virus, develop a new material for electronics, or understand a gamma-ray burst in the universe. For example, data from not only LSST but also LIGO, ALMA, and other instruments will need to be combined with large scale HPCD simulations to understand such cosmic events. While LSST will be connected to NCSA's HPCD facilities, much work will still be needed to integrate data from other instruments.
- Another attribute of the culture to create instrument-specific NIT is that often the software is also designed as a one-of-a-kind effort, focusing on the initial, experiment-specific implementation of NIT. This often duplicates efforts, sometimes with lower quality than other efforts that could be leveraged, and adds costs. Even more, it adds substantial change costs, to adapt to ever-improving next generation HPCD hardware. Software efforts are typically not funded nor managed appropriately. Short term cost savings lead over the long term to serious inefficiencies in both performance and cost.

Given sufficient planning horizons for development of major scientific instruments, with much deeper coordination among projects and participating agencies, along with more stability and continuity in the funding cycles of major HPCD Centers, significant synergies could be developed that both (a) better serve the complex problems addressed by science communities and (b) significantly reduce overall costs as existing infrastructure and expertise could be combined and leveraged.

The promise of such an integrated effort could be realized, but would need to be examined to understand how best to find synergies, manage the coordination of funding, to renew NIT investments that need reinvestment on shorter timescales than "glass & steel" instruments, etc. Community efforts to look at these issues by groups involved are just beginning (see, e.g., sciencedrivenCI.org for one community-driven concept that speaks to this issue). The NSCI

provides a perfect opportunity to examine these issues and to develop new approaches to address them, with participation from agencies such as NSF as a key integrator, along with DOE, DOD, NIH, NASA and other agencies, and coordinated by NCO.

I believe such a revamping of this system of federal NIT investments that include major instruments and experiments, could better serve research and industry communities to address complex problems while at the same time saving many hundreds of millions of dollars, or more, over time.

5. *Please discuss the importance of federal investments in networking and information technology research and development and why the NITRD program is important.*

Federal investments in NIT research and development are critical for two key reasons: (a) they support and catalyze many if not most of the advances in fundamental technologies, methodologies, and their applications to NIT activities that power 21st century society and the economy, and (b) they support and enable virtually other all areas of research in all science and engineering areas and their applications to drive economic progress. For example, the internet itself and the web browser, now our primary tool for interacting with every computer, mobile phone, and now even automobiles and home appliances, are direct results of federal investments in NIT research. Google itself can be traced to NSF grants, that very quickly developed into a world force for economic and societal development.

In terms of application of NIT investments to support all other areas of research, I have made many arguments above that show that all areas of research are profoundly enabled by advances in NIT investment. Put even more strongly, many research endeavors that will lead to developments of vaccines that save lives, more efficient planes, more accurate hurricane and better earthquake forecasting would be impossible without current NIT capabilities. Their advances are completely dependent on future NIT advances. Such advances result largely from federal investments rather than strictly private sector investments. *While investments in all areas are needed, I know of no other federal investments that have as much potential to lay the groundwork to advance all areas of research, engineering, and economic development than NIT investments.*

Specifically regarding scientific computing investments, critical for all areas of research, most have come from federally funded research, including the software and algorithms used in the largest systems. These techniques have often been adopted by industry (for example MPI, the default method for data communication in HPC, is probably the best, most comprehensive example, but there are many software packages that have been adopted in industry). Federal investments have also impacted the development of hardware from microprocessors to memory to networking technologies. These developments influence designs in the larger commercial market to make them more effective in meeting US needs. Of course, it works both ways! Developments in the commercial sector for commodity hardware has often impacted supercomputer design as well, as most visibly achieved with the Beowulf project where it was shown that commodity computer systems could be used to build powerful HPC clusters,

influencing an entire generation of supercomputer designs, and enabling significant advances in discovery science and industrial innovation across the world.

As for the NITRD program itself, as the primary coordinating body at the federal level for NIT cooperation across all relevant federal agencies, it is essential that it be funded appropriately and that it function effectively. Today's research and development activities are increasingly complex and interdisciplinary, and they do not respect disciplinary nor agency boundaries. For example, work to understand the AIDS virus and its susceptibility to possible drug therapies requires expertise in fundamental physics, chemistry, biology, computer science, mathematics, electron microscopy, medicine and ultimately medical trials; virtually all this work requires coordinated advances in HPC and large scale supercomputers, Big Data from instruments such as advanced light sources, and advanced software to make it all work. In order to be not only cost effective, but even possible at all, coordination and collaboration across the disciplines and communities must take place, connecting multiple agencies that traditionally support these disparate communities: NSF, DOE, NIH, and others. NITRD's mission and effective coordination is essential for this to work properly.

6. *Where should Congress focus its federal IT R&D investments when it faces tough budget and deficit decisions and why?*

As stated above, I believe, and many studies show, that federal investments in IT R&D pay very large dividends to the economy and to society, and on increasingly short time scales (measured here in a small number of years rather than decades). Further, NIT investments, particularly those that directly support HPC simulation, modeling, and big data applications, are now, more than ever, essential to support progress in all other areas of basic and applied research and engineering (that themselves pay large dividends to the US economy). NIT investments are a rather small fraction of the overall federal R&D investment portfolio. Therefore, efforts to preserve or modestly increase investments in these essential NIT areas, even in an era of difficult deficits, are not only needed to support all science and innovation, but will pay benefits and help drive economic recovery over not-so-long term. I will point out that while DOE budgets in HPCD reflect this growing need, and have increased somewhat over the last decade, NSF budgets in this area have essentially been flat. NIH, which depends largely on NSF and DOE HPCD facilities, has not yet developed its own HPCD strategy. As competition for time on NSF facilities increases as need grows faster than capacity, NIH's growing needs will be much harder to satisfy. NSCI asks that these agencies and others develop coordinated strategies for such investments, which is absolutely critical for success of the future of science and innovation.

At the same time, it is very important to optimize across a complex portfolio of different NIT investments. For example, improvements in algorithms and software can far exceed capabilities of advances or larger investments in HPC hardware, so attention given to these areas, including the scientific and engineering applications that utilize them, can provide as much or more overall capability that mere hardware investments alone. These "soft" investments have typically lagged the hardware investments. (When I was at NSF, in order to address these

issues, I did increase funding in the software, algorithm, and application areas as a start on this problem. But more needs to be done.) Simply said, smart investments pay off more!

Another critical NIT area that I have not mentioned above is cybersecurity, which should be thought as critical to the national security as well as having many other benefits for the kinds of R&D mentioned above. This would include many aspects, from quantum information science to networking and cryptography.

A last but critical point to make is simply that flat federal investments in NIT areas will perpetuate the bottleneck in tyring to grow university programs (including growing the number of faculty needed, who depend on federal grants sustain their programs) to train the next generation of students and NIT-savvy workforce. There is tremendous need for growth in this workforce, but universities struggle to grow their programs without concomitant federal investments to support them. (See below for more detail.)

a. *Can you recommend where significant savings can be achieved within the NITRD portfolio?*

Given the importance to the nation of the overall investments in NIT R&D, the primary ways I can see where savings could be found are twofold. The first concerns how some investments in the NITRD portfolio, for example, those that enable virtual experiments to be done on computers, may be able to reduce dependency on physical laboratories. While this is especially true in teaching, in many cases simulation and modeling have now reached a high level of maturity, and big data approaches will soon follow, that can significantly augment and possibly reduce investments in other kinds of physical infrastructure. Investments in one type of infrastructure can strongly impact other kinds. For example, many chemical or materials properties can be computed reliably by simulation, reducing the need for physical infrastructure. (This was a key idea behind the Materials Genome Initiative of 2011, which was largely created as a vehicle for economic development.) Such tradeoffs should be examined given the rapidly changing methods towards a more digital and virtual approach to R&D.

Second, I believe savings might be achieved are through looking for synergies in programs where collaboration across agencies might be improved, where development and operation of large digital instruments (e.g., from NSF, DOE, NIH, NASA, etc) could more deeply connected to other investments in NIT infrastructure, e.g., at existing HPCD centers, national labs, etc. Potentially hundreds of millions of dollars, or more, could be saved over time if this were to be done, and science could be better served.

This would require a different approach to planning and funding major digital instrument, HPC and data-intensive facilities than is currently common practice. All would require longer planning/operating horizons. For example, at NSF, large projects of the "MREFC" class, typically costing of order a billion dollars, of which a large fraction is devoted to NIT development/deployment, could be planned in a way to leverage each other's NIT activities and to connect them to better support research. Data from, say, NSF's LIGO, LSST, and ALMA

MREFC projects, as well as simulations from Blue Waters class (and above) supercomputers, may all be needed to understand a gamma-ray burst, yet currently these projects are funded and operated independently. Likewise, DOE will need to do this for its future light source and leadership class computing facilities. Likewise, NIH and NASA, etc. But just as importantly, coordinating across agencies will be important. Between NSF's MPS Directorate and DOE's Office of Science, about 90% of the US physical science research is supported, and many communities are already working together on common instrument projects (e.g. Large Hadron Collider, Large Synoptic Survey Telescope, etc.). NSF's MREFC and DOE's CD processes are already able to be synchronized for construction of single instruments of importance to both agencies. *This approach could be applied also across projects and to the HPCD centers, creating better synergies over longer timescales, leveraging existing concentrations of expertise, and saving funds.*

7. *The workforce needs of the IT field continue to grow and will need workers to fill those needs. Unfortunately, participation in computer science-related courses does not seem to be growing to meet the needs of employers. What are academic institutions and industry doing, and what more can they do to encourage student involvement and engagement in computing fields?*

The NIT workforce is the most important asset in our portfolio, far exceeding the value of any investments in hardware, software, etc. This is recognized by many prospective students (although there is a serious diversity issue in these communities; female and other underrepresented groups constitute only a small fraction of the overall student body in these fields, presenting a clear opportunity for increasing the IT workforce which needs much more attention. But this must be addressed while also creating more places for students in these areas.) Let me take this in three different sectors of the NIT space: computer science, data science, computational science and engineering (CSE), as the issues are slightly different.

Computer Science: The University of Illinois has seen the number of computer science students *double* in the last few years, a trend that is common across the nation. However, meeting the need for instructors and space in very difficult. There are not enough classrooms, nor faculty slots in universities, to keep up with the demand we already have. Beyond space, a key issue limiting the number of faculty, who are needed to teach the students, is that federal NIT investments that support their programs do not increase with the enrollment of students. Success rates for successful funding in computer science is typically 15% or less, with pressure increasing, which limits the rate of creation of new faculty positions. So these issues must be addressed together: university programs, space on campuses, and federal IT investments supporting the research programs that train the advanced students, etc.

Data Science: At the same time, numerous data science programs are being created, with incredible over-subscription (ten-to-one, even fifty-to-one) for available places in emerging programs. Many studies show that the number of data scientists needed will far outstrip the supply already this decade, and universities are scrambling to respond. But the same faculty, space, federal support bottlenecks described above apply here as well.

Computational Science and Engineering (CSE). CSE is a cross between the above NIT disciplines, and the science and engineering areas that require them. Many CSE programs are developing across the nation, and many companies that depend on simulation and modeling (e.g., the many NCSA PSP partners across five distinct industrial sectors) depend on graduates who are trained in these areas. Yet not enough students are trained in these areas for the same reasons as above, compounded by the fact that academic programs and federal agencies alike have not fully embraced CSE programs nor understood exactly where they should live in their portfolios. Among federal agencies, the DOE does the best job embracing CSE training. NSF recently began a program entitled "CDSE" to include data science research as well. Programs that support these areas that will lead to growth in the numbers of students trained should be strengthened, both at the federal and university levels.

In all these areas, academia is also beginning to take a hard look at the training it provides for students. At the graduate level especially, training is often aimed at producing more faculty, rather than providing the training really needed either to enter companies as productive, skilled workforce, or for entrepreneurship to support new company creation. It is clear that more training, or a different kind of training, is needed to produce the kinds of skilled workforce needed by companies, or to produce graduates who are more able to innovate in terms in entrepreneurship.

This is not only up to universities alone! Companies can influence universities as can federal agencies that fund their research programs. NITRD should pay attention to these trends and help federal agencies balance portfolios accordingly.

a. *Do you believe that the development and application of IT related systems, services, tools, and methodologies have boosted US labor productivity more than anything else in recent decades?*

I believe most of my colleagues would agree that this statement is largely true, but I do not have clear facts from studies at my disposal to quantitatively back up this statement.

b. *Do you believe that the IT industry will continue to increase the productivity of the US workforce?*

Yes, with similar caveats as above. I believe it is quite certain that overall, that investments in IT that train more workers, and advance our national R&D capacity in these areas, will pay large dividends on the investments.

8. *In previous NITRD hearings, we have heard that NIT's role in national security, national competitiveness, and national priorities is far broader than high-performance computing alone. Can you expand on how the NIT field has influenced or continues to influence national security and competitiveness?*

There are multiple answers to this question. First of all, there is no question that HPC has had tremendous impact on national scientific and economic competitiveness. I have focused much of the testimony above on the critical importance of NIT, and HPCD in particular, to scientific competitiveness. But the case is equally made in industry. Many such reports, for example of the US Council on Competitiveness (CoC), has many statistics and case studies about the importance of HPC on US economic competitiveness. According to the CoC, one of the biggest barriers to competitiveness in US industry is a dearth of trained workers in CSE fields, which I have personally experienced in discussions with numerous NCSA PSP partners. Many countries are increasing their investments in this area specifically to attract new industry or to make it more competitive. For example, I know from personal experience that both international and Russian companies are advocating for large HPC investments and partnerships with Russian universities to make their industry more competitive.

On the other hand, it is certainly true that a far larger ecosystem of NIT is critical for all areas of national security, scientific and economic competitiveness. This would include Big Data areas, which as argued above, are related to HPC. But to this I would also say that HPCD systems today are the leading edge technologies that make their way into commodity systems tomorrow. Today's laptop has the power that was first achieved in HPC systems a decade earlier.

A good balance of NIT investments is required, and HPCD is an important but certainly not a dominant part of this ecosystem.

9. *What important research areas do you believe the NITRD program should focus on in the future?*

My response is focused primarily on the activities that support all science areas, as these are the ones that the most potential for impact in maintaining US leadership, not only in NIT, but across all sectors of science and society.

In the last three decades, the US has established leadership in simulation and modeling, applied to all areas of science and engineering, and rapidly adopted by industry. While other nations followed suit, the US has maintained an edge in many (but certainly not all) areas. This has driven advances across all areas of science and industrial applications, and has found its way into many areas of instrumentation. For example, due to advances in HPC, algorithms, and software, US research groups have led the world in applications to simulate advanced systems in astrophysics, materials, chemistry, and econometric modeling, leading to numerous Nobel prizes, while also powering industry from designing better detergents to improving aircraft design.

These areas of investment must continue to for the US to continue to lead, and need to be expanded in certain areas. HPCD systems are becoming more complex, and much

larger, requiring more focus in programming models, software tools, and algorithms, and the applications that can take advantage of them. This will require programs that not only fund these technologies, but teams of science communities to drive and use them for complex problems.

Research into the hardware itself requires investment, as we have nearly reached fundamental limits of the number of atoms needed to build a switch in a microprocessor. New approaches to chip design, including quantum approaches and quantum information science, are also needed to continue the race for faster and more capable systems.

Further, the challenges are not only on HPC systems, but in the broader ecosystem of computing systems connected to data intensive instruments. For example, over half of the projects running on Blue Waters require data inputs and outputs for real-world results, a trend which will continue to require more deeply integrated computing and data intensive environments. This the brings in not only the central importance of optical networking to transport the data between HPC and data systems, but the entire realm of data intensive science for which new data services are required to realize the potential of Big Data.

On this backdrop, as science and engineering research around complex grand challenges becomes more prevalent, the need to combine numerous approaches from HPC systems, instruments, data services, and connected by optical networks, will drive more complex workflows to be developed that make such work possible. This will further complicate the difficulty of usability of not only high end HPCD systems (for which significant work is needed just to more effectively use a machine with potentially millions of processors), but even more, the entire complex ecosystem. Work will be needed to enable, automate, and reproduce scientific work in these complex environments.

In many cases simulation and modeling on HPC systems are deeply coupled to Big Data to create a complex ecosystem, as argued above, but data-intensive science itself brings in new approaches that are even more broadly applicable across science and industry. New approaches to storing, linking, discovering, reproducing, and computing on data sets must be developed. The integrity of the scientific process itself is at stake, as digital data, linked to publications of scientific results, can in principle be used to more rapidly disseminate results, make them available and discoverable across interdisciplinary communities, and provide a unique opportunity to check and even extend the results of scientific work. Economic benefits may also arise if data from science results are directly linked to publications, as companies may be able to more rapidly adopt results into their own R&D projects, enabling more rapid development of products into the marketplace from initial discovery in labs. This is basic idea of the Materials Genome Initiative, aimed to bring products to market at twice the speed and half the cost of current approaches.

This new data world will have associated costs. How will we pay for the storage, dissemination, and services associated with data? Federal investments are part of the answer, but all must contribute to these costs of such services, including universities, companies, and other agencies (e.g., state and local). These issues should be examined for what investments will be need at the federal levels. I believe that while significant, investments to enable good data stewardship and services around scientific research, that will accelerate discovery, enhance interdisciplinary research, and more effectively support reproducibility of scientific results, are well worth the costs. If only a few per cent of federal research budgets were devoted to preserving and openly disseminating digital results of scientific work, the overall scientific, innovation, and economic capacity of the nation would increase by much more.

Questions submitted by Rep. Randy Hultgren

1. *How should we improve our interagency working groups at NITRD to better serve our research capabilities and connect with the core capabilities certain agencies may have?*

A number of recommendations have been made by the PCAST subcommittee reviewing NITRD (which falls under the Committee on Technology) to update antiquated working group structures, which are good steps forward. And NITRD's excellent leadership team is responding very well to these recommendations. *But I believe they do not go far enough to integrate science and innovation activities with NIT activities, but they need to in order to more effectively support developing trends in science and innovation described above, and to do this in a more cost effective way.*

The NITRD working groups are generally (and naturally) focused on NIT-related issues, rather than the science issues. But NIT issues are largely driven by, and fundamentally enable, virtually all other areas of scientific research and innovation. As stressed above, the research areas are driving NIT technologies in new directions and combining them in new ways (e.g. they are driving the emergence of large instruments as NIT infrastructures themselves that must be considered an integral part of the NIT ecosystem). The complex scientific research activities are now more deeply, and inextricably, intertwined with NIT activities. These trends should be reflected in the coordinating structures of federal NIT investments. I believe that this cannot be done effectively strictly under the Committee on Technology alone.

Therefore---and this is my primary recommendation for this question---I believe it is essential that a broader set of coordinating activities that includes activities under the Committee on Science be considered. This would bring together the groups that are envisioning the future of science and innovation with those envisioning and planning future NIT investments that are both driven by and enabling the scientific work.

Enter the National Strategic Computing Initiative, or NSCI. This is a very good approach, with the breadth of activities needed to plan for both a major transformation of the science and innovation landscape and the NIT technologies that will be needed. NSCI also has the long-term planning horizon (15 years) that will be needed if we are create new federal collaborative funding and management vehicles that will more effectively coordinate investments in both national NIT and scientific instrument infrastructures so that effective leveraging can be achieved, better supporting trends in research while potentially saving significant federal funds over time. Among other considerations, a rethinking of the NSF MREFC and DOE CD processes might be required, as well as new mechanisms for similar-scale investments under NIH, NASA, DOD, etc.

This a very ambitious agenda, that will require significant work and focus of attention from Congress, OSTP, OMB, and participating agencies. But it is an agenda that should provide a clear focus for both NITRD and its counterparts under the Committee on Science that could guide federal agencies to achieve these goals.

Responses by Dr. Edward Seidel

Response of Dr. Gregory D. Hager

to questions posed by the Committee on Science, Space, and Technology Subcommittee on Research and Technology U.S. House of Representatives

Questions submitted by Rep. Barbara Comstock, Chairwoman, Subcommittee on Research and Technology

1. How did PCAST choose the eight key areas to focus on for findings and recommendations?

In selecting the topics to focus on for this NITRD review, our working group examined previous NITRD reports, consulted with experts, and debated within the committee to establish the eight prioritized areas. The choice of areas represents an amalgam of topics that are collectively both timely, and which, with investment, could have large societal impact.

Two of those areas, Health and Cybersecurity, were chosen as they are among our most important national priorities. Although they were also called out in prior NITRD reviews, the consensus was that they continue to warrant attention and investment. Two other areas, Big Data and IT Interaction with the Physical World, represent areas that are currently undergoing rapid evolution and transformation. They are benefitting from recent government initiatives but deserve continue attention and stewardship due to their enormous future potential.

Privacy and Cyber-Human Systems arise from the deepening integration of people with information technology. This is an area where technology innovation in the private sector is often outstripping the development of basic scientific principles to underpin and guide these developments, and to anticipate future risks.

The final two, High-Capability Computing and Foundational IT research, reflect the consensus that we must also pay attention to the technology base on which all of the uses of IT depend. Indeed, these foundational investments are in fact investments that will benefit all areas of IT-based research.

We also note that some areas that were singled out in earlier NITRD reviews are now incorporated within one of the eight topics described herein. For example, software is a crucial component in any use of information technology and no topic can be treated without consideration of its software aspects, but this report does not include a separate section on software. Finally, we emphasize that coverage of topics in our report is selective, not comprehensive – the decision to not highlight any particular topic in this review does not signal a lack of importance or opportunity to do more in that area.

2. Out of all of the recommendations that you helped to put together on the NITRD program, what do you believe are the most important to be implemented in the immediate future, and why?

I would note that the recommendations can be viewed as falling into three categories: 1) recommendations that agencies make specific coordinated research investments, 2) recommendations related to workforce education, and 3) recommendations related to NITRD organization. Of these, I would note that the third (NITRD organization) has been a priority in several past NITRD reports. In my opinion, undertaking a modernization of the NITRD program component areas, and a concomitant rethinking of the NITRD working groups is an essential first step that can be carried out relatively quickly. Undertaking this reorganization will, in turn, create a NITRD organization that will be more effective at promoting priorities within its participating agencies, and assessing the participation of those agencies in programs responsive to our recommendations.

In establishing priorities, I would also like to caution that it is tempting to focus resources on what seems to be an immediate need – for example funding cybersecurity research due to the growth in successful attacks. I would however strongly council to maintain a broad and balanced program of IT R&D funding that seeks to advance knowledge for medium to long-term advantage as well as addressing more immediate needs. I would also council to maintain consistency of objectives. Training (or retraining) researchers takes time and effort – often 2-4 years – before they are able to contribute at the leading edge. Translation of results into practice can take just as much time. Thus, shifts in priorities must be done carefully, thoughtfully, and with a multi-year commitment in mind.

3. Considering the amount and scale of cybersecurity attacks that we have witnessed in the past year, how can the NITRD program address system vulnerabilities to prevent or mitigate these kinds of attacks in the future?

The NITRD program itself cannot prevent or mitigate these kinds of attacks – rather it is the role of the NITRD program to highlight and catalyze the need for research in areas and to promote coordination of R&D to reduce the possibility of such attacks. It is also important to understand that many of these attacks are successful due to multiple factors, both human and technical -- for example, failures in the installed software base to enforce best practices to eliminate known vulnerabilities, failure to use the latest software releases and failure to guard against unauthorized access. While research can provide new tools and approaches to addressing current and future system vulnerabilities, implementation of best practices is a very effective means of mitigating vulnerability to attack.

That noted, the fundamental cybersecurity research supported by NITRD agencies will have considerable long-term benefit. It is tempting to think of security in terms of creating an impermeable perimeter; but this is really just one aspect of security. We should move toward a security model where we develop systems that are resilient to attack. That is, if infiltrated, they are able to continue to function, they isolate the potential damage from an attack, and they

capture information that will aid in tracing the source of the attack. The PCAST NITRD review outlines several specific areas of research along these lines.

Current research supported by NITRD also includes work focused on building a "science base" for trustworthiness – a set of abstractions, principles and trade-offs for building trustworthy systems given the realities of the threats, our security needs, and a broad collection of defense mechanisms and doctrines. Such a science base will help us navigate the issues at the intersection of technology and policy (economic and regulatory) that characterize potential solutions to our cybersecurity issues. Other research areas are highlighted in answer 5, below.

Additionally, an often overlooked but key benefit of the Federal investment in fundamental cybersecurity research at U.S. universities is that it produces the trained students who will form the core of the workforce charged with tackling these issues moving forward.

4. Do you find that, in the wake of cyber breaches, agencies are more inclined to conduct more research and development in the area of cybersecurity?

Agencies have clearly responded to the need for additional research in cybersecurity, to the extent that available funding permits – for example NSF's establishment of the Secure and Trustworthy Cyberspace (SaTC) program. However, echoing my responses to 2 and 3 above, without additional new monies, I would caution against overly aggressive diversion of resources into cybersecurity at the expense of all other areas of IT R&D.

5. Is there more that agencies can do in the realm of cybersecurity research and development in addition to the recommendations included in the PCAST report?

Research that improves cybersecurity is broad and multifaceted, and can thereby engage a broad spectrum of the computing research community. For example, research in programming language design or in operating system design or in core software capabilities can make it easier to create trustworthy software. Research in machine learning can enable better ways to identify vulnerabilities or more quickly detect intrusions. Better methods for identity determination than passwords can reduce unauthorized use. Indeed, nearly any area of computing research could contribute in some way to better cybersecurity. In short, cybersecurity could be used as a motivating application for many areas of computing research.

6. The San Diego Supercomputer Center at the University of California recently launched "Comet," a new petascale supercomputer. How does the NITRD program support supercomputing and projects like Comet?

It is important to understand that the spectrum of high-performance or high-capacity computing applications is broad and multi-faceted. There are problems that are amenable to readily available commercial systems, there are problems that require petascale computing, and there are problems that can only be solved by exascale computing. And, it is safe to say that in the future we will wish to address problems that go well beyond the scale of computing

we currently envision. This frontier has proven to be an extremely valuable driver for the creation of technologies that are then applied throughout the computing value chain.

Systems such as Comet play a key role in servicing the demands of the so-called "long tail" of applications which do not demand the absolute highest performance currently available, but which cannot be readily solved by commercial systems. Further, it fills this gap in a particularly flexible and cost-effective manner. It is also important to consider that the evolution of large scale computing is no longer just the province of the "highest flops" machine. New data intensive architectures are now a parallel element when we discuss high performance computing.

The role of NITRD in such projects is to help to identify the unmet needs of the research communities that stand to benefit from new computing resources, and to provide a clearing house for discussions as to where investments would yield the maximum return on investment.

I would note that the role of NITRD is complementary to the recently announced National Strategic Computing Initiative (NSCI) which provides an opportunity to define the future of high-capacity computing in a broad sense. NSCI will provide new energy and impetus to convene a broad and ongoing set of conversations among both the "producers" and "consumers" of high-capacity computing capabilities, an activity that NITRD will undoubtedly help to convene and to stimulate.

6a. What is the significance of a new petascale supercomputer?

As noted above, the significance of a new petascale supercomputer is, quite simply, an acceleration of advances that depend on these computing resources. As I have noted in my testimony, experts have indicated that other nations have a much better developed national system of computing resources; Comet and systems like it help to reduce their lead. A secondary effect of new systems like Comet is they provide the flexibility to experiment with new ways to allocate or partition computing resources – for example the idea of creating "virtualized clusters" allowing more researchers to use resources more effectively customized to their problem.

7. Please discuss the importance of federal investments in networking and information technology research and development and why the NITRD program is important.

We have discussed the importance of IT R&D in the section of our report entitled "The Importance of Sustaining Government Investments in IT R&D" (pages 15 and 16 of the PCAST NITRD review). In particular we note many reports, for example a recent report by the National Research Council (NRC)[1], have documented the importance of long-term research in creating

[1] Computer Science and Telecommunications Board; "Continuing Innovation in Information Technology," *National Academies Press,* http://www.nap.edu/catalog/13427/continuing-innovation-in-information-technology 2012.

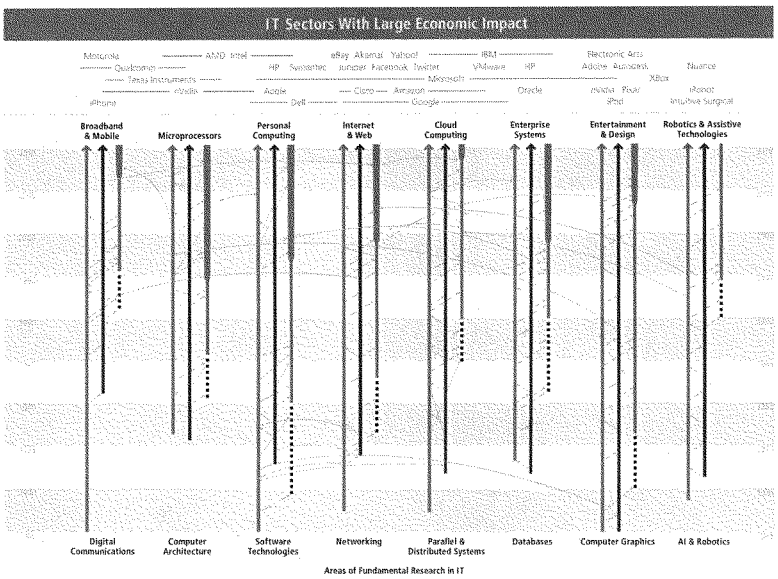

many of the most successful IT-based industries. A particularly useful depiction of the impact of basic research and the subsequent evolution of those ideas into products can be found in Figure 1 of that report which is reproduced below:

In this chart, the bottom lists areas of IT research; the red lines indicate when academic research in the area began and was active. The blue lines indicate when associated industrial research took place. The green lines indicate when products based on this research were offered, and the width of the line indicates the scale of the market – thin solid green is a $1B market; the wider green indicates a $10B market. At the top are arrayed the companies that have been created and their placement is a rough association to the research areas. The thin lines crossing between verticals illustrate the impact of cross-fertilization within an area and across areas. We refer to the CSTB report for additional details.

As we note in the PCAST NITRD review, the impact of computing research and development is expanding, and has increasing impact on many sectors of the economy and in society at large.

As such, we can expect that computing research will continue to evolve in a direction that links core computing research with high-value application areas – defense, health, manufacturing, urban infrastructure, transportation, education, and so forth. As such, NITRD coordination among agencies with high capacity for basic research (e.g. NSF or DARPA) and agencies that have mission-focused research needs (e.g. Transportation, Education, HHS) will continue to grow in importance.

8. Where should Congress focus its federal IT R&D investments when it faces tough budget and deficit decisions and why?

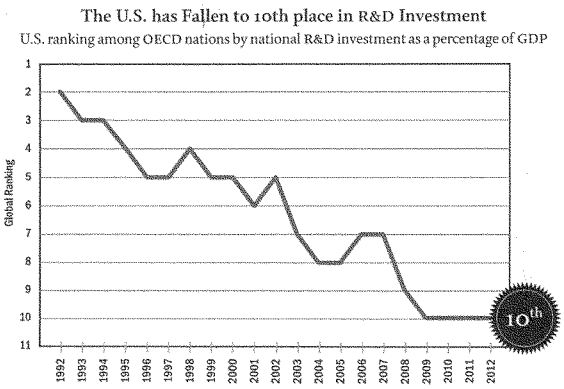

In my view, "top down" dictation of spending priorities may lead to more inefficiencies than benefits. It is first important to emphasize that budget limitations have already severely impacted the United States science ecosystem. The United States has lost its place as a leader in scientific research broadly – for example a recent report by the American Academy of the Arts and Sciences[2] highlights the fact that the US is now 10th within OECD nations in terms of investment in R&D as a percentage of GDP as illustrated in the Figure 1B of that report, reproduced above. Nations such as Japan, Korea, and Germany – all significant technology competitors – are growing their investments at a much higher rate.

The impact of the under-funding of science is clear to see. Funding approval rates for major IT R&D programs in research agencies such as NSF and NIH are sometimes in the single digits – that is, fewer than *one proposal out of every ten submitted is funded.* This not only creates incredible inefficiencies in the writing and reviewing of unfunded proposals, but also discourages younger researchers from pursuing careers in science and places our future innovation capacity at risk.

With this in mind, I would strongly advocate that Congress, rather than mandating where funding is spent, allow the NITRD agencies to set their own priorities to ensure they maintain a

[2] Restoring the Foundation: The Vital Role of Research in Preserving the American Dream, https://www.amacad.org/content/Research/researchproject.aspx?d=1276, 2014.

robust and broad-based program, and one which encourages the most creative and enterprising researchers to pursue their ideas.

a. Can you recommend where savings can be achieved within the NITRD portfolio?

As noted above, the current system is creating tremendous overhead, on the part of investigators, per dollar won from federal sources. Current investments in research could be made more effective by ensuring that the dollars spent for research are not consumed by the overhead of managing the funding itself. For example, the requirements associated with monitoring performance and managing compliance divert a significant and growing amount of investigator time and institutional resources away from research. Establishing a more efficient system for such monitoring would enable an increase in research productivity at the same cost. A recent NRC report "Optimizing the Nation's Investment in Academic Research: A New Regulatory Framework for the 21st Century: Part 1"[3] provides a detailed review and recommendations in this area.

9. The workforce needs of the IT field continue to grow and will need workers to fill those needs. Unfortunately, participation in computer science-related courses does not seem to be growing to meet the needs of employers. What are academic institutions and industry doing, and what more can they do to encourage student involvement and engagement in computing fields?

As I noted in answer to questions during my testimony, on the contrary, demand for education in computing is enormous and increasing rapidly. Recent data from the Computing Research Association's Taulbee survey[4] indicate rapid growth in the number of students majoring in computer science. Reports from various universities indicate an equally rapid growth in the number of non-majors taking computing courses[5]. Computer Science departments around the country report being overwhelmed by students. Beyond this there is now a growing ecosystem of training programs to teach basic programming skills to non-specialists.[6]

The major limiting factor in nearly all programs and at all educational levels is the human resources to teach all of these learners, not student demand. Universities are challenged to meet this demand as this growth is happening at a time when the private-sector demand for the students and researchers who are suited to academic careers is also at its highest. As a

---

[3] Optimizing the Nation's Investment in Academic Research : A New Regulatory Framework for the 21st Century: Part 1, http://www.nap.edu/catalog/21803/optimizing-the-nations-investment-in-academic-research-a-new-regulatory?dm_i=1ZJN,3QJOR,E29NKG,DG9IU,1, 2015

[4] http://archive2.cra.org/uploads/documents/resources/crndocs/2014-Taulbee-Survey.pdf

[5] http://lazowska.cs.washington.edu/NCWIT.pdf

[6] As Tech Booms, Workers Turn to Coding for Career Change, http://www.nytimes.com/2015/07/29/technology/code-academy-as-career-game-changer.html?_r=0, July, 2015.

result, competition within universities as well as between academic and non-academic organizations is intense and dramatically exceeds the existing pipeline of available talent.

Thus, the opportunity space is to create incentives and programs that ensure the short and long-term supply of trained professionals who are career computing researchers and teachers so that we do not "eat our seed corn" as we noted in our report.

> ***a. Do you believe that the development and application of IT-related systems, services, tools, and methodologies have boosted U.S. labor productivity more than anything else in recent decades? If so, why do you believe this to be the case? Will the IT industry continue to increase the productivity of the U.S. workforce?***

In my opinion, the facts are clear. Referring again to the chart in question 7 above, in the roughly 60 years since the first commercially available computers were offered, numerous highly successful IT-related companies have grown to become multi-billion dollar enterprises. Three of the top 10 companies by market capitalization are IT-related companies (Apple, Microsoft, and Google). IT-related activities comprise over 7% of the US GDP. No other industry sector, to my knowledge, has grown at this rate.

These trends can be expected to continue. Much of this growth, in my opinion, will be driven by the expansion of IT beyond data and information, and into the physical world. Automated transportation and agriculture, more productive manufacturing, in-home assistant for the aged or infirm are all examples of sectors that stand to be revolutionized by IT.

10. In previous NITRD hearings, we have heard that NIT's role in national security, national competitiveness, and national priorities is far broader than high-performance computing alone. Can you expand on how the NIT field has influenced or continues to influence · national security and competitiveness?

For this question, I would refer back to my answers to previous questions. Namely, there is a well-established evolution from basic research to applied research, products, and finally major industries across multiple areas encompassing cybersecurity, healthcare, defense, manufacturing, transportation and so forth.

11. From your perspective as the co-Chair of the NITRD working group of P-CAST, which consisted of experts from academia and industry, would it be beneficial to have industry more engaged in the NITRD program? If so, in what way and why?

As noted by Dr. Marzullo in his testimony, it is important to first note that Industry is engaged in the NITRD program at many levels. In some cases, agency programs include industry partners (e.g. within DARPA). In other cases, industry co-invests as in the recent NSF partnerships with Intel on Cyberphysical Security[7]. Many workshops, including both workshops organized by

[7] http://www.nsf.gov/pubs/2014/nsf14571/nsf14571.htm

NITRD as well as workshops organized by member agencies, include industry participants. Finally, there is constant engagement with industry at the "grass roots" level among investigators and their students.

There are of course other opportunities to grow industry engagement. Creating programs that are leveraged by industry investments, or programs that leverage industry trends can "grow the pool" beyond what is possible within current federal budgetary constraints. Industry can often provide non-monetary resources that are of high value – unique infrastructure, data sets, testbeds – and which also serve to help orient the research community toward the most relevant problems.

12. In your testimony, you discuss the P-CAST recommendation that the National Science Foundation should sponsor broad foundational research on methods to facilitate end-to end construction of trustworthy systems; particularly for emerging application domains, and on ways to anticipate and defend against attacks.

a. What is entailed in end-to-end construction of trustworthy systems? How difficult is it to achieve?

The term "end-to-end" refers to the fact that any single vulnerability in a system puts the entire system at risk, even if the rest of the system is robust in its cybersecurity. Historically, systems were constructed monolithically (i.e. as a single integrated unit), making cybersecurity somewhat easier to manage. Today, systems are typically composed of distributed and diverse units, often created at different times by different organizations. This approach has numerous advantages by providing for more agile and cost-effective system construction, but it creates new challenges in ensuring that the overall system is secure.

In many cases, industry does not have adequate tools to develop and maintain end-to-end trustworthy systems – that is why it is posed as a research challenge. Part of the challenge is creating technical abstractions and related tools that support the construction of complex trustworthy systems. Part of the challenge is to also understand the role of human frailty in systems and to find ways to overcome vulnerabilities caused by inadvertent or deliberate human misbehavior.

b. Do most systems have end-to-end security by construction? Please explain why or why not.

No, most systems have been developed over time, and, in some cases, incorporate components that were designed and created when cybersecurity was less of a concern. Modifying such systems is challenging from a technical perspective and expensive. For a variety of reasons, systems already deployed are often not updated with cybersecurity in mind if they are otherwise performing satisfactorily.

c. Are there consequences associated with not having end-to-end security by construction? If so, what are those consequences?

There are abundant and well-known consequences of having insecure systems. End-to-end security is a technical approach to reducing the risks that stem from insecure systems. It is worth noting that as systems grow in size and complexity, end-to-end security is increasingly difficult to guarantee and, at the same time, the exposure in the case of a security breach potentially grows as well. Thus, achieving very large-scale secure and trustworthy systems is a particular challenge.

d. Do you believe that it is important to have end-to-end security by construction? If so, please explain why?

It is the belief of experts in cybersecurity that to the extent that it is possible to build systems that are designed with cybersecurity in mind, the risk of successful attack is reduced. It is clear that systems composed of components, as I have described above, has numerous advantages over more monolithic approaches. Thus creating methods to construct complex secure systems will be essential in the future.

13. What important research areas do you believe the NITRD program should focus on in the future?

Information technology evolves continuously and rapidly. As our Working Group noted in the report, our choices today are governed by the evolution of technology itself, the implications of that technology for society, and the influence of society on technology needs. The research questions of the future will be necessarily different from the issues of the present and are difficult to predict. Indeed, this is why continuous review of our research investments in IT R&D is important -- to keep identifying the important topics of the time in order to maintain the lead that the U.S. has enjoyed so far.

Questions submitted by Rep. Randy Hultgren, Member, Subcommittee on Research and Technology

1. How should we improve our interagency working groups at NITRD to better serve our research capabilities and connect the core capabilities certain agencies may have?

Most participants in working groups volunteer their time. In some agencies, the management doesn't recognize participation in NITRD working groups as part of the job description. More appreciation of the value of coordination and explicit recognition for this activity within the agencies is needed. This would both make the participants more empowered and effective in serving the US research enterprise and it would serve to highlight the role of this coordination and thereby better engage and empower the NITRD working groups.

Questions submitted by Rep. Daniel Lipinski, Ranking Member, Subcommittee on Research and Technology

1. In his hearing testimony, Dr. Seidel recommended better coordination between the NITRD Subcommittee and Committee on Science Subcommittees under the National Science and Technology Council in order to ensure that the needs and expertise of the scientific user community are represented in NITRD priorities. Do you agree with this recommendation? If so, what steps do you believe the NITRD Subcommittee can take to increase such coordination? If not, why not?

There is no question that there is a growing cross-fertilization of ideas between IT R&D communities and science communities. Diverse fields such as astrophysics, genomics, and social science increasingly rely on computational advances to build instruments, collect data, and perform analysis. In this regard, there is real value in ensuring robust discussions between the NITRD subcommittee and the subcommittees on science. The question of whether there is adequate coordination, and how such coordination might be facilitated is however not a topic that arose in our review and it is therefore difficult to provide any authoritative advice on this question.

2. One of the issues we have heard raised in previous hearings and PCAST reports is how exactly to count research infrastructure as part of the NITRD budget. The demand and cost for infrastructure is high and growing, accounting for a significant fraction of the total NITRD budget. However, as I understand it, there remain open questions about what to count and not to count, for example the large databases maintained by many of the mission agencies such as NASA. How should infrastructure be counted under NITRD? Would there be value in a strategic plan or roadmap covering all of NITRD infrastructure, or are the needs and types of infrastructure too diverse?

The important issue is not to confound large shared infrastructure funding with funding for the research it enables. Both are important, as is striking an appropriate balance. The committee is undoubtedly aware that computing and networking are ubiquitous, that many NIT infrastructure investments do not support R&D at all, and that some investments in NIT infrastructure largely support R&D in disciplines other than computing research. In order to ensure that the portfolio is managed well, it is important to distinguish those different kinds of investment. Whether certain infrastructure such as large databases is counted in the cross-cuts depends on how useful compiling that information would be in informing investment decisions. For example, one might expect that data investments have increased as data analytics have become more important for a diversity of fields, and that infrastructure that supports the collection and analysis of data maybe useful to track. This may, in turn, allow one to determine how much such infrastructure contributes to the cost of doing research, and whether that cost of additional infrastructure is well justified when weighed against other areas of research. This is of course true more broadly of infrastructure investments -- the fact that the infrastructure is IT-based is secondary.

3. The NITRD Program represents a very large and diverse investment in many topics and many fields within science and engineering. In recent years, the NITRD agencies have undertaken more narrowly focused strategic plans, for example in cybersecurity, and now in privacy and big data. When not specifically directed by Congress, how should the NITRD subcommittees choose which areas will most benefit from a strategic plan? Is there still value in a NITRD-wide strategic plan covering the full $4 billion investment? Is some kind of planning or vision document other than a strategic plan more useful and appropriate?

The value of a strategic plan is that it helps to identify important determiners of success in moving an important field forward, and can then inform investment decisions. Experience suggests that because of the large scope and diversity of the program, a NITRD-wide strategic plan has been less useful than strategic plans focused on emerging areas in which the components of success are more apparent. Vision documents are useful in setting out new research directions; they are not the same as strategic plans.

Questions submitted by Rep. Elizabeth Esty, Subcommittee on Research and Technology

1. There is a significant mismatch between the pipeline and demand for skilled IT workers. This is both a challenge and an opportunity for K-12 education, where computer science is rarely part of the core curriculum. PCAST made recommendations for increased federal investment in NIT education and training, and specifically for new or expanded programs at NSF and the Department of Education. Dr. Hager, can you describe PCAST's recommendations in greater detail? How are these recommended programs different from existing programs at NSF?

Computer science knowledge is and will continue to grow as a major part of STEM education. NSF has played a strong role in developing and piloting programs to enhance computing literacy, particularly in K-12. For example, CS 10k which targets juniors and seniors and is tied to the new Computer Science AP examination, and ECS which is targeted at middle school and early high school. NSF's role is to create the materials for these courses, to create and assessment tools, and to deploy programs at sufficient scale to determine their effectiveness, and to improve or optimize their effectiveness.

Scaling these programs is the role of other players, including the federal government (through the Department of Education), as well the private sector and more philanthropically driven initiatives such as code.org. In this regard, Education, with NITRD coordination, can play an essential role developing strategies and longer-term plans to ensure that the best available tools are made available to education professionals, and training for those professionals is made widely available.

There are two additional areas where more could be done. First, education in computing is necessary for all students in the 21st century; not just for potential IT professionals. As such, Education could be playing a larger role than it is at present in K-12 computing fluency and understanding. NSF programs tend to contribute more directly to the IT workforce; expanding their scope can broaden the pipeline in a more encompassing way. Second, there is a growing need for retraining of the workforce to become more computing literate. There are already signs (as noted above), that private concerns are recognizing this need. I believe an opportunity for NSF and Education is to create a framework for education and retraining in computing that goes beyond just teaching basic programming skills, but is instead aimed at broader life-long computing literacy and understanding of computational concepts.

Appendix II

Additional Material for the Record

STATEMENT SUBMITTED BY DR. KENNETH BALL

Volgenau School of Engineering
Office of the Dean
Nguyen Engineering Building, Suite 5100
4400 University Drive, MS 4A3, Fairfax, Virginia 22030
Email: ball@gmu.edu; Phone: 703-993-1500

STATEMENT FOR THE RECORD

BY

DR. KENNETH BALL

DEAN

VOLGENAU SCHOOL OF ENGINEERING

GEORGE MASON UNIVERSITY

FOR

HEARING

A REVIEW OF THE NETWORKING AND INFORMATION TECHNOLOGY RESEARCH AND DEVELOPMENT (NITRD) PROGRAM

THE SUBCOMMITTEE ON RESEARCH AND TECHNOLOGY

REPRESENTATIVE BARBARA COMSTOCK, CHAIRMAN

10:00 A.M., WEDNESDAY, OCTOBER 28, 2015

2318 RAYBURN HOUSE OFFICE BUILDING

NITRD Program
October 28, 2015

Chairman Comstock, Ranking Member Lipinski, and distinguished Members of the Committee.

Thank you very much for holding this important hearing today. Madam Chairman, on behalf of George Mason University let me take this opportunity to say how much we have enjoyed working with you and your staff on a variety of issues, particularly the Mason instructional site in Loudoun County. As you know, our main Fairfax Campus is located just outside the 10th Congressional District, and you represent many Mason faculty and staff. We thank you for all you do for us, and for your leadership in keeping the United States the global leader in science, technology and innovation. I would be remiss if I did not also extend warm, personal regards from Mason President Ángel Cabrera.

I also want to recognize the outstanding work of Ranking Member Lipinski. Mason and the universities in this country owe a lot to you for your tireless service in advancing a robust research agenda. Thanks to both of you, our R&D enterprise is in good hands with the leadership of this committee.

I am Kenneth Ball, Dean of the Volgenau School of Engineering at George Mason University. Mason is Virginia's largest public research university. Mason enrolls more than 34,000 students from 130 countries and all 50 states. Mason has grown rapidly over the past half-century and is recognized for its innovation and entrepreneurship, remarkable diversity, and commitment to accessibility. You would be pleased to know Chairman Comstock, that there are approximately 5,500 students and 27,000 alumni in the 10th. Unfortunately, we do not have comparable numbers for the 3rd District of Illinois, but I am sure that Mason has a noticeable footprint there.

Mason offers 200 degree programs, including 85 masters and 38 doctoral. In the 2013-14 academic year, Mason conferred 8,745 degrees, with half that number constituting graduate and professional degrees. Mason employs 6,500 faculty and staff to serve our growing student body. Relevant to this hearing, the second largest undergraduate program at Mason is Applied Information Technology, with close to 1,300 students.

In addition to our Fairfax Campus and Instructional Loudoun Campus, Mason has a campus in Arlington, which houses our Law School, School of Policy, Government, and International Affairs, and other programs. Our Science and Technology Campus is located in Prince William Country. We recently opened the Institute for Advanced Biomedical Research where we do some of the most cutting edge research in the nation on cancer, Alzheimer's and other brain related disorders, Lyme Disease, and Diabetes. Our Level-3 Bio-Containment Lab, (one of only 12 in the country), which does research on toxic agents is also located there. Mason's sponsored research exceeds $100 million.

Finally, Mason has one of the lowest cohort default rates in the nation at 1.8%. Our students graduate with the highest income jobs in the State when compared with other schools.

Let me now turn to the subject of the hearing, *The Networking Information Technology Research and Development Program.* This is a very important subject and timely hearing. As the Dean of the Volgenau School of Engineering, I will attempt to explain how Mason's range of IT

programs aligns with NITRD and how we contribute to national IT goals. I will share some perspectives on NITRD priorities.

I based most of my investigating on two documents: The PCAST review of NITRD from January 2013 and the NITRD FY 2016 Supplement to the President's Budget. The PCAST document has (on pages xi-xii) a set of 13 recommendations. I think that all of them are sound. Two of them are especially relevant to the Volgenau School:

> **Recommendation 1:** *Big data, NIT-enabled interaction with the physical world, health IT, and cybersecurity continue to be important, and while there is noticeable progress on interagency coordination since 2010, these areas remain as critical focal points in 2012 and beyond. Continued emphasis and even greater coordination is recommended.*
>
> **Recommendation 4:** *NSF, DARPA, and agencies that need software tailored to their missions must collaborate to support core research that advances design, development, modification, and maintenance of all varieties of software, incorporating reliability, robustness, security, and specialization for particular domains. Both sustained investment to achieve long-term research goals and focused research to address near-term challenges must be supported.*

A recommendation of lesser significance to Volgenau, but which is definitely important to various research groups at Mason is the following one:

> **Recommendation 2:** *The National Science and Technology Council (NSTC) should create a multi-agency collaborative effort, with the National Science Foundation (NSF) and Defense Advanced Research Project Agency (DARPA) as lead agencies, to develop a coordinated cross-agency initiative in social computing, building on the research results and understanding emerging from existing programs such as NSF's Social-Computational Systems Program (SoCS).*

The FY16 Supplement, on page 2, contains the following statement:

> *Agencies coordinate their NITRD research activities and plans in eight Program Component Areas (PCAs), which are the major subject areas under which related projects and activities carried out under the NITRD Program are grouped. Budgets for the PCAs are reported in the annual NITRD budget crosscut. The PCAs are:*
>
> - *Cybersecurity and Information Assurance (CSIA)*
> - *High Confidence Software and Systems (HCSS)*
> - *High End Computing Infrastructure and Applications (HEC I&A)*
> - *High End Computing Research and Development (HEC R&D)*
> - *Human Computer Interaction and Information Management (HCI&IM)*
> - *Large Scale Networking (LSN)*
> - *Social, Economic, and Workforce Implications of IT and IT Workforce Development (SEW)*
> - *Software Design and Productivity (SDP)*

All are important national issues. The ones that have significant relevance to Mason (and greatly overlap the recommendations from the first report) include CISA, HCI&IM, SEW, SDP. There is also some activity at Mason in High End Computing, and we continue to build capacity to become a national leader in this area.

Before I point to activities at Mason that are related to these topics, let me just put my observations into some context as it relates to Volgenau. Our mission at Volgenau is to solve real world problems, enhance people's lives, and make the world a safer, cleaner, healthier, and more prosperous place to live. Current enrollment is 6,222, and we graduated 1,134 last spring. We have 165 faculty and 17,000 alumni. The Volgenau School of Engineering's programs cover a wide array of disciplines including electrical and computer engineering, computer science, systems engineering and operations research, civil, environmental, and infrastructure engineering, statistics, bioengineering, and mechanical engineering. This large, multidisciplinary school maintains a dual preeminence in both information technology and engineering.

Volgenau is the first school of engineering in the United States to offer a B.S. degree in cyber security engineering, and the first school with scholarships focused primarily on information technology-based engineering. Volgenau is ranked 7th nationally for Return on Investment by Affordable Colleges Online (2014). Our cyber security program ranked 7th nationally by Ponemon Institute (2014). We are also ranked 11th Best Graduate Program by GraduatePrograms.com (2015). That same source ranks our Computer Science Department as 25th best in the nation.

Let me drill down a bit of the PCAST Report and the FY2016 Supplement.

Big Data: There is a great deal of activity at Mason in this area. Mason is one of the national leaders in data analytics, and a quick overview of Volgenau's work can be found here: http://volgenau.gmu.edu/big-data. But, let me highlight two of our research centers that are most relevant and how they directly benefit society:

- *Center for Air Transportation Systems Research* (http://catsr.ite.gmu.edu/): Uses big data and mathematical models to improve the reliability, efficiency, and safety of the national air transportation system.
- *Center of Excellence in Command, Control, Communications, Computing, and Intelligence* (http://c4i.gmu.edu/): Uses big data (and other approaches) applied to military applications.

There is considerable additional work looking at many aspects of big data. The work intersects most of our departments. There is also relevant research in the College of Science, and in College of Humanities and Social Sciences. Some of this I'll mention below under Social Implications of IT. The point is that PCAST's first recommendation should remain a high priority and worthy of this committee's continued oversight to ensure national goals are met.

Cybersecurity and Information Assurance: This is another priority area for research and education, and additional information can be found here: http://volgenau.gmu.edu/cyber-security. Much of the research is associated with two of our research centers:

- *Center for Secure Information Systems* (http://csis.gmu.edu/): Information systems security is of increasing importance in government, military and commercial arenas. The Center for Secure Information Systems (CSIS) provides a dedicated environment to encourage the development of expertise in both the theoretical and applied aspects of information systems security. The CSIS emphasis on information security makes it unique among the institutions of higher learning in this country.
- *Center for Assurance Research and Engineering* (http://care.vse.gmu.edu/): CARE offers a full breadth of cybersecurity research and expertise, including securing mobile devices and mobile apps, constructing methodologies for development of secure software, developing technology and policy guidance for securing critical infrastructure, building systems for network intrusion detection and testing for intrusion tolerance, developing technology and guidance for Industrial Control Systems and SCADA security, analyzing risks and providing technical solutions for newly connected technologies including unmanned aerial vehicles, automobiles and medical devices.

Relatedly, let me note that Volgenau is also part of the National Science Foundation Industry & University Cooperative Research Program. Our leading Center is as follow:

- *Center for Configuration Analytics and Automation* (http://ccaa.gmu.edu/): The goal of the Center for Configurations Analytics and Automation (CCAA) is to build the critical mass of inter-disciplinary academic researchers and industry partners for addressing the current and future challenges of configuration analytics and automation to improve service assurability, security and resiliency of enterprise IT systems, cloud/SDN data centers, and cyber-physical systems by applying innovative analytics and automation.

In short, the NITRD CISA Program Component Area is critical to the nation's ongoing effort for infrastructure resilience and provides Federal agencies opportunities to leverage university research by providing the necessary foundational support.

Health IT: Volgenau research includes both health IT as well as bioengineering. You can get a quick overview here: http://volgenau.gmu.edu/health-care-tech. Volgenau researchers have fine-tuned MRI techniques to help patients, developed motor-controlled learning, developed an automatic "arm", and used ultrasound technology to study neck pain. Mason's College of Health and Human Services has a robust program in Health IT (Health Informatics). Health informatics faculty at Mason conduct original research in several areas related to health informatics, health information technology, and health services research. Particular research areas of interest are electronic/personal medical records, intelligent systems, health care terminologies, data and text mining, consumer health informatics, clinical decision support, and health data privacy and security. See more at https://chhs.gmu.edu/hap/health-informatics/research.cfm.

As the nation continues to move medical records to digital media, and as new technologies allow for novel medical discoveries, services, treatments, and efficiencies, health IT must remain an area of priority. Health IT has tremendous potential.

Software Design and Productivity: Our Computer Science Department has a number of faculty who conduct research in Software Engineering. This is not as prominent, however, as the previously mentioned Big Data, Cybersecurity Information and Assurance, and Health IT.

Human Computer Interaction: *The Laboratory for the Study & Simulation of Human Movement* https://cs.gmu.edu/~vislab/people.html is devoted to research on developing new instrumentation and combining existing instrumentation in new ways to measure human movement. The laboratory enables faculty, graduate students, and undergraduates at Mason, as well as other universities and agencies, to participate in the exploration of human movement study, with the purpose of developing minimally intrusive, wireless data capture methodology to measure human motion and designing computer displays and graphic-user interfaces from which to model and simulate human motion. The Laboratory is part of the Center for the Study of Chronic Illness and Disability in the College of Health and Human Services. Volgenau is also involved in this laboratory.

The Psychology Department in the College of Humanities and Social Sciences also has a number of assets engaged in important work using IT technologies and robotics to evaluate and improve human performance, including: Auditory Research Group, Driving Simulation Facility, Applied Performance Research Lab, Neuroergonomics Lab, Visual Attention and Cognition Lab, Cerebral Hemodynamics Lab, Human-automation Interaction Research Group, Cognitive Aging Research Group, Social Robotics and Embodies Cognition Lab, Predicting Cognition Lab, and the Perception & Action Neuroscience Group. Time simply does not permit more details about these labs, more information can be found here: http://psychology.gmu.edu/research/human-factors-and-applied-cogniton-research-labs.

Social Implications of IT: The major player at Mason regarding the Social Implications of IT is the Center for Social Complexity, http://socialcomplexity.gmu.edu/. The Center pursues interdisciplinary advanced research and discoveries that support exploration and analysis of human social phenomena. One such project uses spatial simulations to investigate the impact of disastrous events such as drought on life in Africa's Rift Valley. Another project uses advanced computational tools to undertake Humanitarian Assistance/Disaster Relief scenario analysis.

Chairman Comstock, Ranking Member Lipinski, I hope that I have been able to give you a picture of how the NITRD program filters down to university research community. It serves as the foundation for the research we do, the facilities we build, the students we educate, and the problems we solve. While there are some PCAST recommendations and Program Component Areas that are more suitable to Mason's mission, other universities may bring different strengths and leverage different aspects of NITRD. That is why your continued oversight of the program is critical.

Let me take this opportunity to make one final point that is related to the discussion today. We urge this committee to work for a robust cybersecurity R&D program. We appreciate that the House and Senate have been advancing important cybersecurity information sharing legislation. But, to keep the nation safe and protect our critical infrastructure, there needs to be an ongoing effort for advanced research, education, and workforce training that is much bolder than currently exists. The House and Senate have moved cybersecurity R&D bills in past Congresses, including H.R. 2952, H.R. 3107, H.R. 3834, S. 2105 and other bills. But they have not reached the President's desk.

NITRD Program
October 28, 2015

We discussed with your committee staff the potential of a grand vision, like a Cyber-Grant program based on the highly successful 150-year old "Land-Grant" partnership among universities, the private sector, and government. While we certainly recognize that the "Land-Grant" model is far too ambitious for today's fiscal climate, a more realistic approach might be legislation to authorize several competitively-awarded Cybersecurity Centers of Excellence with re-programmed funds. The basic idea is to catalyze a long-term research program based on the needs of businesses and government to proactively address emerging and unforeseen challenges in the cyber world. Universities are best quipped to also take the fruits of that research to the classroom and to the user community. It is a looped system that feeds back to the university.

We urge you to give this idea your consideration.

Again, thank you very much for the opportunity to present this statement.

○