AUTHENTICATED
U.S. GOVERNMENT
INFORMATION
GPO

SECTION 512 OF TITLE 17

HEARING

BEFORE THE

SUBCOMMITTEE ON
COURTS, INTELLECTUAL PROPERTY,
AND THE INTERNET

OF THE

COMMITTEE ON THE JUDICIARY
HOUSE OF REPRESENTATIVES

ONE HUNDRED THIRTEENTH CONGRESS

SECOND SESSION

MARCH 13, 2014

Serial No. 113–86

Printed for the use of the Committee on the Judiciary

Available via the World Wide Web: http://judiciary.house.gov

U.S. GOVERNMENT PRINTING OFFICE

87–151 PDF WASHINGTON : 2014

For sale by the Superintendent of Documents, U.S. Government Printing Office
Internet: bookstore.gpo.gov Phone: toll free (866) 512–1800; DC area (202) 512–1800
Fax: (202) 512–2104 Mail: Stop IDCC, Washington, DC 20402–0001

COMMITTEE ON THE JUDICIARY

BOB GOODLATTE, Virginia, *Chairman*

F. JAMES SENSENBRENNER, JR., Wisconsin
HOWARD COBLE, North Carolina
LAMAR SMITH, Texas
STEVE CHABOT, Ohio
SPENCER BACHUS, Alabama
DARRELL E. ISSA, California
J. RANDY FORBES, Virginia
STEVE KING, Iowa
TRENT FRANKS, Arizona
LOUIE GOHMERT, Texas
JIM JORDAN, Ohio
TED POE, Texas
JASON CHAFFETZ, Utah
TOM MARINO, Pennsylvania
TREY GOWDY, South Carolina
RAÚL LABRADOR, Idaho
BLAKE FARENTHOLD, Texas
GEORGE HOLDING, North Carolina
DOUG COLLINS, Georgia
RON DeSANTIS, Florida
JASON T. SMITH, Missouri
[Vacant]

JOHN CONYERS, JR., Michigan
JERROLD NADLER, New York
ROBERT C. "BOBBY" SCOTT, Virginia
ZOE LOFGREN, California
SHEILA JACKSON LEE, Texas
STEVE COHEN, Tennessee
HENRY C. "HANK" JOHNSON, JR., Georgia
PEDRO R. PIERLUISI, Puerto Rico
JUDY CHU, California
TED DEUTCH, Florida
LUIS V. GUTIERREZ, Illinois
KAREN BASS, California
CEDRIC RICHMOND, Louisiana
SUZAN DelBENE, Washington
JOE GARCIA, Florida
HAKEEM JEFFRIES, New York
DAVID N. CICILLINE, Rhode Island

SHELLEY HUSBAND, *Chief of Staff & General Counsel*
PERRY APELBAUM, *Minority Staff Director & Chief Counsel*

SUBCOMMITTEE ON COURTS, INTELLECTUAL PROPERTY, AND THE INTERNET

HOWARD COBLE, North Carolina, *Chairman*
TOM MARINO, Pennsylvania, *Vice-Chairman*

F. JAMES SENSENBRENNER, JR., Wisconsin
LAMAR SMITH, Texas
STEVE CHABOT, Ohio
DARRELL E. ISSA, California
TED POE, Texas
JASON CHAFFETZ, Utah
BLAKE FARENTHOLD, Texas
GEORGE HOLDING, North Carolina
DOUG COLLINS, Georgia
RON DeSANTIS, Florida
JASON T. SMITH, Missouri
[Vacant]

JERROLD NADLER, New York
JOHN CONYERS, JR., Michigan
JUDY CHU, California
TED DEUTCH, Florida
KAREN BASS, California
CEDRIC RICHMOND, Louisiana
SUZAN DelBENE, Washington
HAKEEM JEFFRIES, New York
DAVID N. CICILLINE, Rhode Island
ZOE LOFGREN, California
SHEILA JACKSON LEE, Texas
STEVE COHEN, Tennessee

JOE KEELEY, *Chief Counsel*
HEATHER SAWYER, *Minority Counsel*

CONTENTS

MARCH 13, 2014

Page

OPENING STATEMENTS

The Honorable Howard Coble, a Representative in Congress from the State of North Carolina, and Chairman, Subcommittee on Courts, Intellectual Property, and the Internet 1
The Honorable Jerrold Nadler, a Representative in Congress from the State of New York, and Ranking Member, Subcommittee on Courts, Intellectual Property, and the Internet 2
The Honorable Bob Goodlatte, a Representative in Congress from the State of Virginia, and Chairman, Committee on the Judiciary 4
The Honorable John Conyers, Jr., a Representative in Congress from the State of Michigan, Ranking Member, Committee on the Judiciary, and Member, Subcommittee on Courts, Intellectual Property, and the Internet .. 5

WITNESSES

Sean M. O'Connor, Professor of Law and Founding Director, Entrepreneurial Law Clinic, University of Washington (Seattle)
Oral Testimony 8
Prepared Statement 10
Annemarie Bridy, Alan G. Shepard Professor of Law, University of Idaho College of Law
Oral Testimony 15
Prepared Statement 18
Paul F. Doda, Global Litigation Counsel, Elsevier Inc.
Oral Testimony 31
Prepared Statement 33
Katherine Oyama, Sr. Copyright Policy Counsel, Google Inc.
Oral Testimony 42
Prepared Statement 44
Maria Schneider, Grammy Award Winning Composer/Conductor/Producer, Member of the Board of Governors, New York Chapter of the Recording Academy
Oral Testimony 54
Prepared Statement 56
Paul Sieminski, General Counsel, Automattic Inc.
Oral Testimony 59
Prepared Statement 61

LETTERS, STATEMENTS, ETC., SUBMITTED FOR THE HEARING

Material submitted by the Honorable Judy Chu, a Representative in Congress from the State of California, and Member, Subcommittee on Courts, Intellectual Property, and the Internet 78
Material submitted by the Honorable Ted Deutch, a Representative in Congress from the State of Florida, and Member, Subcommittee on Courts, Intellectual Property, and the Internet 86

Page

APPENDIX

Material Submitted for the Hearing Record

Material submitted by Maria Schneider, Grammy Award Winning Composer/Conductor/Producer, Member of the Board of Governors, New York Chapter of the Recording Academy 120
Material submitted by the Honorable Darrell E. Issa, a Representative in Congress from the State of California, and Member, Subcommittee on Courts, Intellectual Property, and the Internet 124
Response to Questions for the Record from Sean M. O'Connor, Professor of Law and Founding Director, Entrepreneurial Law Clinic, University of Washington (Seattle) 215
Response to Questions for the Record from Annemarie Bridy, Alan G. Shepard Professor of Law, University of Idaho College of Law 222
Response to Questions for the Record from Paul F. Doda, Global Litigation Counsel, Elsevier Inc. 233
Response to Questions for the Record from Katherine Oyama, Sr. Copyright Policy Counsel, Google Inc. 236
Response to Questions for the Record from Maria Schneider, Grammy Award Winning Composer/Conductor/Producer, Member of the Board of Governors, New York Chapter of the Recording Academy 239
Response to Questions for the Record from Paul Sieminski, General Counsel, Automattic Inc. 241
Prepared Statement of the Library Copyright Alliance 242
Letter from the Directors Guild of America (DGA) 249
Prepared Statement of Cary Sherman, Chairman and CEO, Recording Industry Association of America 254
Prepared Statement of the Assocition of American Publishers (AAP) 260
Prepared Statement of the Computer & Communications Industry Association (CCIA) 271
Prepared Statement of the Future of Music Coalition 276

SECTION 512 OF TITLE 17

THURSDAY, MARCH 13, 2014

HOUSE OF REPRESENTATIVES

SUBCOMMITTEE ON COURTS, INTELLECTUAL PROPERTY, AND THE INTERNET

COMMITTEE ON THE JUDICIARY

Washington, DC.

The Subcommittee met, pursuant to call, at 9:31 a.m., in room 2141, Rayburn Office Building, the Honorable Howard Coble, (Chairman of the Subcommittee) presiding.

Present: Representatives Coble, Goodlatte, Marino, Smith of Texas, Chabot, Issa, Poe, Chaffetz, Farenthold, Collins, DeSantis, Smith of Missouri, Nadler, Conyers, Chu, Deutch, Richmond, DelBene, Jeffries, Cicilline, Lofgren, and Jackson Lee.

Staff Present: (Majority) Joe Keeley, Chief Counsel; Olivia Lee, Clerk; (Minority) Heather Sawyer, Minority Counsel; Jason Everett, Counsel; and Stephanie Moore, Counsel.

Mr. COBLE. The Subcommittee on Courts, Intellectual Property, and the Internet will come to order.

Without objection, the Chair is authorized to declare recesses of the Subcommittee at any time.

We welcome all of our witnesses today. Thank you all for appearing before the Subcommittee for this important part of our copyright system, the notice and takedown provisions of Section 512.

Online piracy continues to grow to scale, harming the ability of individual artists and companies to add to our Nation's economy. The notice and takedown provisions of Section 512 are designed to help copyright owners protect their works from online infringement while enabling good-faith ISPs to avoid potential liability for the actions of their users.

A review of the written testimony shows disagreement about the proper role and action of an ISP in independently identifying and responding to infringing content. While no one seems to be suggesting that the ISPs routinely seek out infringing files, it does seem unreasonable that once an ISP has received thousands of notices for the same content from the same copyright owner, it then acts at least somewhat differently than it would after receiving the first notice.

A growing flood of notices is not necessarily a sign of success either, except perhaps by pirates who deprive the copyright owners of any income for the work that they have produced.

In other legislation recently passed by the House, this Subcommittee has targeted those who have abused the patent system from their own ends. It appears that some are also abusing the notice and takedown system in order to remove speech from the Internet they don't like or the website of a business with whom they compete. Actions such as these leaves a negative impact upon the copyright system as a whole, and it needs to be stopped, in my opinion.

I appreciate all your willingness to appear before our Subcommittee today, and I will now recognize—well, first of all, let me officially welcome the gentleman from New York, Mr. Nadler. Jerry has fulfilled the vacancy created when Congressman Watt resigned.

It is good to have you as Ranking Member, Jerry, and I recognize you for your opening statement.

Mr. NADLER. Well, thank you, Mr. Chairman.

This is my first hearing as the new Ranking Member of this Subcommittee. I am honored to succeed our former colleague, Mel Watt, who is now serving as Director of the Federal Housing Finance Agency, and I look forward to working closely with you, Mr. Chairman, with the full Committee Chairman, Mr. Goodlatte, with Ranking Member Conyers and all of my colleagues as we continue the Subcommittee's important work.

Today's hearing is part of our comprehensive review of the Nation's copyright laws to explore how our copyright system is faring in the digital age. Section 512 of the Digital Millennium Copyright Act is a critical piece of this puzzle.

Section 512 limits the liability of online service providers for copyright infringement by their users. Enacted in 1998 when YouTube, Facebook, Google Search, Bing, and many other platforms and applications that we enjoy today were still on the horizon, Section 512 sought to balance the concerns and interests of rights owners and online service providers by creating a collaborative framework for addressing online infringement.

The mechanism established by Section 512 was intended to provide meaningful protection to rights holders who, understandably concerned with the increasing ease and speed with which copyright works could be disseminated to thousands of users, would otherwise have been reluctant to make their creative works available over the Internet.

At the same time, Section 512 was also intended to address service providers' concerns that misconduct by users might subject them to liability. To find shelter in Section 512, providers cannot know about infringing material or activity, cannot receive financial benefit from such infringement, and must implement procedures that allow them to "expeditiously" take down infringing content when they know about it or are notified by the need to do so by rights holders.

Although Section 512 does not condition protection on a provider affirmatively monitoring infringement, except to the extent consistent with standard technical measures, providers must, among other things, remove material when there is actual knowledge of infringement or when infringing activity is apparent—in other

words, when the provider has red-flagged knowledge of infringement.

More than 15 years have passed since the DMCA's enactment, and new technologies have fundamentally changed the Internet, bringing many new benefits but also new problems that were not foreseen in 1998. Among other things, it is now possible for users to share vast amounts of high-quality content with thousands of others, and largely on their own terms. As a result of this and other innovations, online infringement has skyrocketed.

Last year, for example, Google received notices requesting removal of approximately 230 million items. This volume is staggering, even for large companies sending or receiving these notices. For smaller artists, musicians and businesses, it is a practical and financial nightmare.

Maria Schneider, a Grammy Award-winning musician and one of my constituents, who is here to testify today, has been unable to stop online infringement of her works. The resulting loss of income, combined with the cost of monitoring the Internet and sending takedown notices, threatens her ability to continue creating her award-winning music.

As we will hear today, when infringing activity is identified and the notice is sent, users simply too often re-post the material that has been taken down using a different URL. As in the arcade game Whack-a-Mole, the copyright holder succeeds in having the material taken down, only to have it pop back up almost immediately, requiring an endless stream of notifications relating to the same content.

To deal with this problem, Section 512(c)(3) allows the sending of a representative list of copyrighted works and information "reasonably sufficient provided to locate infringing material." I am interested in hearing from our witnesses whether these statutory guidelines have proven sufficient and how best to address this key problem.

Some providers have also expressed concern about potential misuse of the notice process to take down non-infringing content. Such claims appear to be a small portion of the millions of infringement notices that are sent. For example, Google reports that it removed 97 percent of the search results specified in takedown requests between July and December 2011. Nonetheless, Congress sought to minimize the abuse by penalizing anyone who knowingly misrepresents that material is infringing, and Section 512(g) provides users with the opportunity to challenge the removal of content by filing a counter-notification. But are these protections proving sufficient?

These are examples of some of the challenges that have arisen under Section 512. I am also interested in hearing how courts have interpreted the statute and whether key stakeholders have come together to develop standard technical measures for identifying and protecting copyrighted works, as is required in Section 512(i).

As we undertake this review, however, we should also keep in mind that along with its challenges, there have been many Section 512 successes as well. The notice and takedown system has resulted in the quick removal of infringing content on countless occasions. Some stakeholders have come together to develop best practices and have entered into voluntary agreements to help identify

and address online infringement in a timely and effective manner, and Internet innovation has continued to thrive, allowing and inspiring greater collaboration and commerce.

Artists and musicians from superstars to startups now use various Internet technologies to make, market, and sell their creative works. Our goal now, just as it was in 1998, is to preserve incentives for service providers and copyright holders to work together to address online infringement in a manner that provides real protection for creators as the Internet continues to grow and thrive.

Our witnesses today provide a diversity of perspectives and a wide range of experience with Section 512, and I look forward to hearing from them. With that, I yield back the balance of my time.

Mr. COBLE. I thank the gentleman.

The Chair now recognizes the distinguished gentleman from Virginia, the Chairman of the full Committee, Mr. Goodlatte, for his opening statement.

Mr. GOODLATTE. Well, thank you, Mr. Chairman. It is a pleasure to be here, a pleasure to welcome this great panel of witnesses, and it is also a pleasure to welcome the gentleman from New York, Mr. Nadler, as the new Ranking Member on what I think is a great Subcommittee that I have had the opportunity to Chair in the past, and I look forward to our work together on issues related to intellectual property and our courts and the Internet.

Enacted in 1998 at a time when bulletin boards were still a popular destination for many Americans, Section 512 was designed to achieve two important policy goals that were crucial to the success of the Internet: first, enabling good-faith online service providers to operate without risk of liability for the actions of their users; and second, enabling copyright owners to quickly remove infringing online content without flooding the courts with litigation.

These two goals have mostly been met with the rapid growth of the online economy. However, like all legislation related to technology, issues have arisen that were not anticipated during the drafting and enactment of Section 512. These issues have posed challenges that have led some to call for updates to 512. As the Committee undertakes its review of copyright law, the time is right to consider these issues and proposed solutions to them.

Our witnesses today will mention issues of interest to them, and I am interested in delving into three issues in particular. The first is referred to as the whack-a-mole game by copyright owners. By most accounts, good-faith service providers have acted expeditiously in responding to Section 512 notices by removing or disabling links to infringing content.

However, copyright owners are increasingly facing a scenario that simply wasn't anticipated during the enactment of 512, the need of copyright owners to send a voluminous amount of notices seeking removal of infringing content, followed by the almost immediate reappearance of the same infringing content. In an interesting twist, different groups point to the same statistics showing the mammoth amount of notices being sent today as proof of either the system working as designed or the system not working as designed.

A second issue that has been raised is the quality of the notices and the impact upon other important legal doctrines such as fair

use and the First Amendment. While there is little disagreement over the need to expeditiously remove clearly infringing content, how Section 512 intersects with these other legal doctrines is subject to court cases still underway.

Finally, some have begun to engage in behavior that abuses the rationale for Section 512 by sending outright fraudulent notices with little risk for penalties being imposed upon them for their actions. Although the number of such cases appears to be low percentage-wise, this Committee should consider ways to reduce such blatant abuse.

Section 512 was the product of balancing a number of interests to resolve various issues to improve the copyright system for all. As the Committee conducts its review of our copyright system, we should keep this consensus model in mind while examining challenges and potential solutions.

I appreciate the willingness of the witnesses to testify this morning and look forward to hearing from them.

Mr. COBLE. I thank the Chairman.

The Chair now recognizes the gentleman from Michigan, the Ranking Member of the full Committee, for his opening statement.

Mr. CONYERS. Thank you, Mr. Chairman.

I welcome the witnesses as well and congratulate Jerry Nadler for his long continuing interest in copyright law and suggest that the hearings today provide an important opportunity for us to examine online service provider liability and the effectiveness of Section 512 of Title 17 of the Code.

Section 512 creates a mechanism that immunizes certain service providers from liability as long as they don't derive financial benefit from infringing activity and take down infringing material that they know about or are notified about by rights holders through a notice and takedown process. That process allows copyright owners, without having to go to court, to request that certain types of service providers remove infringing material.

So as we examine Section 512 today, there are several factors to be kept in mind. To begin with, although much has happened since 512 was enacted in 1998, part of the Digital Millennium Copyright Act, especially with respect to the Internet and the online landscape, many of the same concerns that led to the enactment of this law still remain.

Fifteen years ago, the Internet was in an early stage of development and extremely different from the way it is today. For example, there were very few blogs and search engines, and social media services such as Facebook and Twitter simply didn't exist. Even then, however, copyright owners were legitimately worried that Internet users could spread near-perfect copies of copyrighted works instantly around the world without first securing permission to use the works.

At the same time, Internet service providers worried that they would be held liable for actions of their users even if the service providers themselves were not directly infringing.

In the 15 years since Section 512's enactment, advances in technology and the globalization of the Internet have presented numerous challenges for those seeking to apply Section 512 to the new and evolving digital distribution systems. So it is important today

that we assess how the law has kept up with the technology. I am concerned that some courts interpreting Section 512 have done so in a way that may be more restrictive than we intended when the statute was enacted. The law as interpreted by some of these courts imposes significant burdens on copyright owners to monitor the Internet and specifically identify sometimes millions of infringing files. At the same time, courts have narrowly interpreted the circumstances under which providers will be deemed to have sufficient red-flag knowledge of infringement to trigger the duty to take material down.

In addition, Section 512 has also generated a large amount of litigation, particularly with respect to issues presented by new technologies such as cyber lockers and peer-to-peer file sharing. These advances in particular have facilitated copyright infringement in a manner that we in Congress did not fully envision when we enacted the Section 512 safe harbors in 1998. And as a result, the statute has proven largely, frankly, ineffective in combatting the massive amounts of infringement that occurs using these technologies.

We must continue to work to decrease the amount of infringing content on the Internet. There continues to be an increase in the number of sites that provide access to infringing copies of movies, television shows, music, and other content. Further, we must consider how we can improve the process for identifying and handling repeat infringers.

When takedowns occur, copies of the same works often are put up immediately elsewhere, resulting in the whack-a-mole scenario that forces rights holders into a never-ending cycle of takedown requests. While some content owners use automatic systems to locate huge quantities of online infringement, this generally produces a large number of notices that may include repeat requests concerning the same infringing file.

We should also consider whether search engines can somehow prioritize results that don't contain infringed material. In today's environment, search engines have initiated practices to demote or alter search results in other contexts, for example, where users attempt to manipulate their rank or to address allegations that search results that prioritize a service provider's own products over those of its rivals is anti-competitive. Today, however, there has been a resistance to do so for copyright holders. We here should explore whether these practices are suitable in this context as well.

So finally, I want to encourage all stakeholders to continue to develop voluntary initiatives to fulfill the DMCA's goals to limit copyright infringement. Copyright owners, online service providers and users are in the best position to assess practices with respect to online copyright material, and to that end, the 2013 Copyright Alert System provides a useful model.

This system is an agreement between major media corporations and large Internet service providers to monitor peer-to-peer networks for copyright infringement and to target subscribers who may be infringing copyright materials. We are listening carefully for other suggestions that may come from you that may be helpful in this area and look forward to your testimony, and I join in con-

gratulating our witness, the Grammy-winning composer, Maria Schneider.

I yield back my time and apologize for taking more than should have been allotted me.

Mr. COBLE. I thank the gentleman from Michigan.

Without objection, opening statements from other Members will be made a part of the record.

Prior to introducing our distinguished panel of witnesses, I would like to swear them in, so I would ask you all to rise, please, and I will administer the oath to you.

[Witnesses sworn.]

Mr. COBLE. Let the record show all witnesses responded in the affirmative.

Professor O'Connor, I believe, Ms. DelBene, is your constituent, so I think you would like to introduce him to the Committee.

Ms. DELBENE. Thank you, Mr. Chairman. It is my pleasure to welcome a fellow Huskie to our hearing today. Sean O'Connor is Professor of Law and Founding Director of the Entrepreneurial Law Clinic at the University of Washington School of Law in Seattle, just outside of my district. His research focuses on how legal structures and strategies facilitate innovation, and his teaching and law practice specialize in transactions and the role of the general counsel in startup companies.

Professor O'Connor received his law degree from Stanford Law School, a Master's degree in Philosophy from Arizona State University, and a Bachelor's degree in History from the University of Massachusetts.

Prior to law school, he was a professional musician and a songwriter for 12 years, and I understand that he still performs now and then at IP conferences around the country in a rock band called Denovo. So we can hear about that more later, too, possibly.

Thank you very much for being here today.

And, Mr. Chair, I yield back.

Mr. COBLE. I thank the lady.

Professor O'Connor, do you also do bluegrass? I am a bluegrass advocate. [Laughter.]

Mr. O'CONNOR. I try to be very careful with that.

Mr. COBLE. Good to have you.

Mr. CONYERS. What about jazz? [Laughter.]

Mr. COBLE. Good to have a fellow Huskie with us.

When you mention Huskie, Ms. DelBene, my mind synonymously thinks of Norm Dicks, and we miss Norm. He was here for a long, long time. I hope he is doing well.

Ms. DELBENE. Yes, he will always be remembered as a Huskie.

Mr. COBLE. Pardon?

Ms. DELBENE. I said he will always be remembered as a Huskie.

Mr. COBLE. Oh, yes. Thank you.

I will be introducing the remaining panel.

Our second witness is Annemarie Bridy, Professor of Law at the University of Idaho College of Law. Professor Bridy teaches courses at the college's Intellectual Property and Technology Law Program. Professor Bridy received her J.D. from Temple University School of Law and her Ph.D. and M.A. from the University of California-Irvine, and B.A. from Boston University.

Professor, good to have you with us.

Our third witness is Mr. Paul Doda, Global Litigation Counsel at Elsevier, Inc. In his position, Mr. Doda is responsible for legislation and copyright enforcement. Mr. Doda received his J.D. from the Philadelphia University School of Law and his B.A. from Montclair State College.

Professor, good to have you with us.

If I appear to be reluctant as I am introducing you, I am having difficulty with my spectacles. I have to get them changed, but bear with me as I stumble along today.

Our fourth witness is Ms. Katherine Oyama, Senior Copyright Policy Counsel of Google, where she focuses on copyright, creativity and policy. From 2009 to 2011, she served as Associate Counsel and Deputy Counsel to Vice President Biden. Ms. Oyama is a graduate of Smith College and the University of California Berkeley School of Law.

Professor, good to have you with us, as well.

Ms. Schneider, good to see you again. I visited with you briefly yesterday.

Our fifth witness is Ms. Maria Schneider, an American composer and big-band leader.

No such luck it would be bluegrass, Ms. Schneider. I am not going to let this die. [Laughter.]

Mr. COBLE. She is also a Grammy Award-winning composer and member of the Recording Academy's New York chapter. Ms. Schneider received her Master's in Music from the Eastman School of Music and studied music theory and composition at the University of Minnesota.

Ms. Schneider, good to have you with us.

Our sixth and final witness is Mr. Paul Sieminski, General Counsel for Automattic, Inc., best known as the company behind World Press. Mr. Sieminski received his J.D. from the University of Virginia School of Law and his B.S. from Georgetown University.

Professor, good to have you with us.

Folks, you will notice there are two timers on your desk. They go from green to amber to red. When the amber light appears, that indicates that you have a minute to go. So if you can wrap up your testimony in about 5 minutes, we would be appreciative to you. I will keep a sharp lookout on that. You won't be keel-hauled if you violate the agreement, but try to stay within that timeframe if you can.

Let's start with the gentleman, the Huskie from the University of Washington.

Mr. O'Connor, good to have you with us.

TESTIMONY OF SEAN M. O'CONNOR, PROFESSOR OF LAW AND FOUNDING DIRECTOR, ENTREPRENEURIAL LAW CLINIC, UNIVERSITY OF WASHINGTON (SEATTLE)

Mr. O'CONNOR. Thank you, Chairman Goodlatte, Chairman Coble, Ranking Members Nadler and Conyers, Members of the Subcommittee. Thank you for having me in here today to speak about Section 512. I have already been introduced, so I will dispense with some of my remarks except to just make clear, of

course, that I am speaking on my own behalf and not on behalf of any of the organizations or clients that I represent.

I sit at the intersection of artists, copyright owners and technology entrepreneurs, and this is where Section 512 has really come to a peak of interest. For example, I have two clients I have represented over the years, Rhizome.org, which is a non-profit set up to foster digital arts around the world, and Kolidr.com, which is a social media platform that allows people to put together multimedia collages to express themselves using various content that they can put together.

The interesting thing about both of these companies is that they were started by artists who respect copyrights and want to help and make sure that those are respected among their fellow artists, but who also want to make content widely available. So they are sitting at the intersection, as I am.

So I would like to make one point, which is that we are often trying to divide the tech world from the content world, and at least where I am, working with smaller artists and startups, there is often quite a lot of overlap there.

Section 512 was an excellent solution to problems in the 1990's, and there was much mention already in the introductions of the problems today about what was being addressed at that point. But over time, it has had some unintended consequences, and I think it has accidentally helped to foster a culture of copyright contempt, oddly enough, even though that was not its intent.

Why? Well, because what I see, working with clients and the kind of advice that they are given when they are doing a website startup, is that they should not be monitoring for content for potential infringement. Why? Well, there is no upside for them. They can. Section 512 allows them to. But there is no upside. They get the safe harbor regardless of whether they monitor and check.

On the flip side, there are a lot of downsides for taking a look and trying to monitor. Why? Well, as was mentioned about the red flags, if they start looking at any of their content that their users are posting, then they may have actual knowledge of an infringing post, or they will have awareness. If they have either of those, they have to proactively take down the content even though there has not been a takedown notice submitted. So why should they look? That is not the intention of the law but, again, this is the unintended consequence.

I believe there is a lack of monitoring that has led to the situation we have now where, as was mentioned, there are takedown notices now filed on millions of posts every month. That is clearly unsustainable.

What I wanted to focus on is not trying to take care of the entire problem but taking care of what I call the relentless repostings of clearly infringing works. So these are not the potential transformative use cases. These are not remixes, mashups and things like that. These are situations where it is just the book, the movie, the song in its entirety put up with no pretense of there being a transformative use. That, I think, is a large chunk of the postings that we could try to reduce.

Since we don't enforce right now and people are told not to look, that has emboldened, I think, the bad actors. They know that they

can just repost this stuff and that the websites, even the ones that want to do the right thing, are encouraged to not look.

So what we would like to do is get the volume down. We won't eradicate it entirely. There will still be a fairly high volume of takedown notices. But if we can take care, again, of what has been described as the whack-a-mole problem for the infringing works that are not even attempting to be transformative, I think we can help out our startups and our artists.

Let's step back for a moment and talk about 512 and how it came about. It was summarized, but I want to home in again on the common carrier doctrine. The most pressing concern in the 1990's was that we wanted access to the Internet. We didn't want the digital divide to get worse, so we needed to be able to allow everyone, through the telecomm companies, to get access to the Internet. Those companies, quite rightly, were concerned that they would be liable for things being sent through their system.

Let me give a couple of proposals as I am running short of time. The first one is that there should be notice and stay-down. This would happen in two stages. First, it would be voluntary practices among the stakeholders to come together to come up with a system to stop the repostings, again for the clearly infringing works, and make some of these tools like Content ID available to the smaller OSPs that can't afford them. Google has done a fantastic job in getting a lot of web-based tools. On my own blog I use Google Analytics. So there could be a way, then, to help the smaller OSPs get those.

But stage two, if no agreement is reached in a reasonable time, we could amend the DMCA to add the duty to remove these reposted works or to lose the safe harbor. This would not be much different from terminating repeat infringer accounts.

The second proposal is to codify willful blindness. Just like the safe harbor in some ways, with Congress setting policy after the Netcomm case, Congress could step in and set policy around willful blindness that now is being set by the courts in a confused array, as many of you have mentioned. What would happen, then, is that a website that had policies against monitoring and had a high volume of notices would lose the safe harbor.

In conclusion, I think that these changes could reduce the volume of takedown notices to a manageable level, would relieve pressure on both artists and websites, and would help to change the culture of copyright contempt. No one wants a post-copyright world. OSPs and artists have valuable IP interests that they need to protect.

Thank you for your time.

[The prepared statement of Mr. O'Connor follows:]

Prepared Statement of Sean M. O'Connor, Professor of Law and Founding Director, Entrepreneurial Law Clinic, University of Washington (Seattle)

Chairman Goodlatte, Chairman Coble, Ranking Member Nadler, Members of the Subcommittee, thank you for the opportunity to testify today about the current state of notice and takedown provisions under the DMCA.

I am a law professor at the University of Washington in Seattle and the Founding Director of its Entrepreneurial Law Clinic. We deliver a full range of corporate, IP, and tax services, focusing on business planning and transactions, to start-ups, artists, and nonprofits. I have also served as Director of UW Law School's Law, Technology & Arts Group and its Law, Business & Entrepreneurship Program. I cur-

rently also serve on the Academic Advisory Board of the Copyright Alliance. Before academia, I was a full time attorney at major law firms in New York and Boston. I have continued an active private legal practice, with current social media clients such as Kolidr, and was General Counsel to Rhizome.org, a nonprofit arts organization for the digital and net art community. Before law school I was a professional musician and songwriter for 12 years, receiving airplay on college and commercial stations in the Northeast. Because of my multiple affiliations, it is especially important to state that my views here are my own and do not necessarily represent the views of any of the organizations I am or have been affiliated with.

INTRODUCTION

The current litigation over the *Innocence of Muslims* video provides a timeliness to the hearing today, as the dispute started with a takedown notice from the actress, Cindy Garcia, to YouTube demanding that it remove the infamous video from its site.[1] Putting aside the more complicated issues in that case, one of the defenses offered by Google (the owner of YouTube) was quite telling. Google asserted that taking down the video from YouTube would provide little relief to Ms. Garcia because it was so widely available on the Internet. Whatever the practical truth of this contention, Google's claim that relief from infringing online content is essentially impossible reflects a common, disturbing narrative that we live in a post-copyright world where everything is available everywhere and there is nothing we can really do about it.

This attitude is both a cause and a result of the main failure of the notice and takedown system that I want to address today: the relentless reposting of blatantly infringing material. This is not material that the poster believes he has rights to, either by ownership, license, or transformative fair use. It is simply posted as an end run around copyright law for fun or profit. This end run is largely made possible by notice and takedown and the safe harbor for online service providers.

1. The Notice and Takedown system is not working for artists, copyright owners, or companies in the innovation and creative industries

The current notice and takedown system under § 512 of the Digital Millennium Copyright Act[2] is not working for any of its intended beneficiaries: artists, copyright owners, or online service providers. For artists and copyright owners, the time-honored analogy of a whack-a-mole game sums up the situation. No sooner does an artist or owner get an infringing copy of their work taken down than other copies get reposted to the same site as well as other sites. It would be one thing if these were copies that at least purported to be transformative. And there are some of those. But holding them to the side, for many artists and owners the majority of postings are simply straight-on non-transformative copies seeking to evade copyright.[3] This is the flagrant infringement facilitated by mirror sites and endless links. To give a sense of the scope, a recent report showed that mainstream copyright owners send takedown notices for more than 6.5 million infringing files to over 30,000 sites each month.[4]

If this infringement were restricted to "pirate" sites and others who are positioning themselves outside the legal system anyway, then this would be a different concern. That is a problem of combatting piracy and not specifically a problem with notice and takedown. But many of the infringing posts I refer to are on legitimate online service provider websites. These sites at least nominally claim to want to be in compliance. And many of them are truly sincere in this. I have counseled web start-ups that very much want to do the right thing. But there are challenges presented by notice and takedown that make this difficult.

---

[1] Cindy Lee Garcia v. Google, Inc., Slip. Op. No. 12–57302 (9th Cir., Feb. 26, 2014).

[2] 17 U.S.C. § 512.

[3] For example, one can find the original recording of pretty much any popular commercially released music title posted to SoundCloud (www.soundcloud.com). This is not SoundCloud's doing or fault necessarily. SoundCloud is a legitimate and useful service for musicians looking to post their own material.

[4] *See* Bruce Boyden, *The Failure of the DMCA Notice and Takedown System: A Twentieth Century Solution to a Twenty-First Century Problem* (Center for the Protection of Intellectual Property, George Mason Univ. School of Law, Dec. 2013), at http://cpip.gmu.edu/wp-content/uploads/2013/08/Bruce-Boyden-The-Failure-of-the-DMCA-Notice-and-Takedown-System1.pdf (citing *Transparency Report: Copyright Owners,* GOOGLE (Sept. 8, 2013) http://www.google.com/transparencyreport/removals/copyright/owners/?r=last-month). The Report also notes that printing out the list of sites for which Google received takedown notices in just one week ran to 393 pages. Further, for the six-month period ending last August, member companies of the Motion Picture Association of America sent takedown notices for nearly 12 million files to search engines, and over 13 million directly to site operators.

Entrepreneurs starting web businesses that allow user generated content are generally told two things by attorneys: i) put strong terms of service agreements and the § 512 copyright information page on your site,[5] and ii) do not monitor content.[6] Those who know the details of § 512 may find the second piece of advice curious. There is nothing in the law that prevents a service provider from monitoring content for copyright infringement. Further, doing so will not push the service provider outside the crucial safe harbor provided for in § 512. But the start-up IP lawyer's perspective is that there is no upside, and some serious potential downside, for the service provider to monitor content. Because the service provider is shielded from infringement liability regardless of whether it monitors, then there are only costs associated with monitoring and no extra benefits. But even worse, given the "red flag" provisions under § 512(c)(1)(A), any service provider who monitors may well have actual knowledge of infringement or an awareness of facts or circumstances from which infringing activity is apparent. When this occurs (and this may be hard to determine), the service provider must expeditiously remove or disable access to the relevant infringing material, or else lose the safe harbor. Monitoring content is a pretty sure way to get actual knowledge or awareness of facts and circumstances. And then the service provider must act, even without having received a takedown notice, to preserve the safe harbor. Thus, the advice is "don't monitor," and don't even look.[7]

At the same time, websites that want to do the right thing fear the "chump" factor. If everyone else is playing fast and loose with copyright—and making money or getting attention for doing so—why should they walk the straight and narrow path (losing eyeballs and money along the way)? Further, in an environment glamorizing "piracy" and adhering to the updated credo "*everything* wants to be free,"[8] then the copyright compliant website might look decidedly uncool.

Related to this, because copyright infringement is so rampant, and so many websites are facilitating it, entrepreneurs question their attorneys' credibility on the law. I cannot tell you how many times a web entrepreneur has asked me and other internet attorneys I know "are you sure about that?" The follow-up to our affirmative answer on the point of copyright law is "but [famous company *x*] is doing it; *their* lawyers must think it is OK." I am now old enough to remember this line of questioning from my start-up clients when "famous company *x*" was Napster, and then Grokster. And we all know how that ended.

Equally important is that web businesses want to focus on business, not mediating notice and counter notices. Many entrepreneurs are shocked when I put together the basic legal documents they need for their site. In particular, they chafe at the formality of the "DMCA copyright page" as we call it. They are also concerned about the flood of notices that will likely come their way if they host user generated content, and the requirement to register an agent with the Copyright Office. The natural response is to want to monitor the site, but this brings its own costs and downsides as mentioned earlier.

Accordingly, no one seems to be happy with notice and takedown. Service providers are certainly thankful for the safe harbor. But the burden it creates on them is significant, especially for small to medium service providers that cannot afford a compliance staff. At the same time, artists, content owners, and others in the creative industries are burdened with the seemingly impossible task of protecting their lifeblood works through endless takedown notices. Most problematic is the unintended consequences: the current state of safe harbors may be contributing to the free-for-all attitude among service providers as there is little downside for turning a blind eye and a lot of upside.

---

[5] And set up your registered agent with the Copyright Office. Privacy policies are recommended too, although this gets more complicated as to form and content.

[6] The exception is for offensive or obscene material (unless of course that is the point of the site).

[7] This is similar to a certain strain of advice from patent attorneys for patent applicants who want to do a "prior art" search to see what is out there that might affect the patentability of their invention. Because of the duty of candor to the U.S. Patent and Trademark Office (USPTO) for patentees and their patent agents/attorneys, the applicant must disclose to the USPTO any relevant prior art that it is aware of. But it is under no duty to undertake a prior art search. Thus, for some patent agents/attorneys, the less they and their clients know about the prior art, the better. There is no upside for disclosing, while there is significant downside risk that the very thing you disclose will be the art the examiner rejects your application on. The attitude is "let the examiner do the prior art search."

[8] This is of course a play on the "information wants to be free" ethic.

2. Original purpose of the Safe Harbors versus current online service provider protections

For context and potential solutions, it is important to recall where this all started. The safe harbors were carefully negotiated compromises among different interest groups solving specific Internet issues of the 1990s. But, as Bruce Boyden notes, that makes them a "twentieth century solution to a twenty-first century problem."[9] In particular, there were two kinds of internet service providers that sought a safe harbor: telecommunications companies that provided access to the Internet, and websites that "distributed" content by hosting it on their servers. The former arguably had the stronger claim to a safe harbor. Both are discussed in the following sections.

A. The common carrier doctrine and Internet open access

In the earliest days of public access to the Internet, users' access was somewhat limited. I remember having my first email and Internet access as a grad student in the early 1990s, which was a typical starting point for Internet users in those days. Those affiliated with universities, the military or government, and some large businesses, had reasonably easy (and free or low cost) access. Others had to find relatively obscure Internet service providers. Users were few, and the online community was small.

As commercial providers such as America Online became more widespread, however, there was a question of who they would, and should, accept as customers. The government started calling for open access (similar to requirements for access in the earlier telecommunications revolution of widespread telephone service). Indeed, open access to any paying member of the public seemed ideal for both business and the growth of the Internet. However, service providers balked at one implication of open access: If they could not choose their subscribers, they had limited avenues for ensuring good behavior online, and thus feared liability for that bad behavior.

The solution to this concern was an update on the common carrier doctrine that had served reasonably well in transportation and other regulated industries. If access to a carrier must be open to all, then the carrier should not have liability for the potential bad acts of those granted access. But this was generally held to apply only where the carrier was not directly involved in the activities and instead merely provided the conduit or vehicle.

This concept led to the safe harbors under the DMCA for Internet *access* providers under §§ 512 (a)-(b). These providers would not have material residing on their servers or on websites they hosted. Rather, they provided access to the pipeline through which subscribers would send and receive materials to/from other points on the Internet. Thus, the materials would be transitory through the providers' servers, routers, and networks. The safe harbor for this activity is under § 512 (a). Caching of frequently sent/received materials at nodes could speed up access and functioning of the Internet, and so this kind of temporary storage of materials solely for the caching function also was granted a safe harbor under § 512 (b).

B. Online service providers and content distributors

The common carrier logic did not apply as well to those providing websites hosting other people's content. First, there was no call for these firms or individuals to allow everyone to use their sites. In fact, from the earliest days until now there have been many limited access sites protected by passwords and/or firewalls. Second, the content on these sites was not just passing through on its way from Point A to Point B. It was staying there either directly visible through a browser or downloadable from an FTP directory.

Notwithstanding this, following the discussion of Internet bulletin board services' liability for user's postings in *Religious Technology Center v. Netcom On-Line Communication Services, Inc.,*[10] website operators who allowed users to post and download content argued that they were acting more as content distributors than publishers. Accordingly, even though they were not providing access *to* the Internet, they argued that they were still a kind of conduit *on* the Internet and should likewise enjoy a safe harbor. While this is a less compelling argument, in my opinion, a safe harbor was nonetheless included for service providers who stored content at users' direction and did not participate in decisions to post the content. Given the far lower speeds on Internet connections and smaller capacity of storage on users' computers, there was not much concern that users would be able to routinely post high quality digital images, much less audio or video back then. Therefore, it may have seemed a safer compromise from the artists' and content owners' perspective

[9] Boyden, *supra* Note 4.
[10] 907 F.Supp. 1361 (N.D. CA 1995).

to allow a safe harbor even for these online service providers who were not performing a critical Internet *access* function. Nonetheless, the common carrier rationale still did not apply, and so there was less of the quid pro quo that justified the safe harbors for access providers.

But the safe harbor for hosted materials was not a free pass to allow flagrant copyright infringement on one's site just because a user had posted it without the operator's participation. Instead, part and parcel with the safe harbor was the notice and takedown system so that copyright owners could let website operators know that infringing material had been posted. As the responsible party and ultimate controller of what could reside on the website, the operator was a natural party for such notice. Further, with the incidence of infringing posts assumed to be relatively low, this was not envisioned to be a frequently used procedure.

Today, by contrast, we have a number of tools to post large content files easily, whether we have rights to them or not.[11] This has resulted in a mind-boggling array of posts. Within these exist millions of clearly infringing content items. Notice and takedown, as a somewhat time-consuming task are not made for this kind of volume of infringement.[12] But the lesson we should learn from this problem is not that copyright is too expansive or that we should simply roll back notice and takedown to make service providers' jobs easier. Instead, the lesson we should take is that we need to find a way to reduce the amount of infringing posts. We do not live in a post-copyright world, and such a world would not be beneficial to service providers. It is easy to dismiss the importance of someone else's intellectual property, but one's own is a different matter. Innovative Internet start-ups hold intellectual property as core assets just as much as do creative industries firms. Accordingly, a solution to the overwhelmed notice and takedown system is in everyone's interest.

3. Proposed solutions

Radical solutions to the notice and takedown problem could include revisiting the whole safe harbor construct and/or eliminating notice and takedown altogether. However, those could have far-reaching and unintended consequences. Instead, we should focus on solutions that simply return some semblance of sanity to notice and takedown. I propose two solutions.

A. Proposal 1: "Notice and Stay-down"

The highest volume of notices seem to be for reposted works, i.e., ones that have already been taken down on notice, yet reappear within hours often on the same site. Further, many of these do not even purport to be transformative or non-infringing. They are not mash-ups, remixes, covers, etc. They are simply the original work reposted repeatedly by unauthorized persons. That the posters do not seem to believe they have any real rights to the works seems supported by the surprisingly low number of counter notices submitted (relative to the enormous number of takedown notices).

My first proposal has two stages. In the first stage, service providers should establish voluntary best practices to monitor for, and immediately remove, reposted works. We know that Content ID and other systems are reasonably effective at identifying copyright works generally. They could be even more effective when used to identify works that have been taken down under notice. The service provider knows what the work is now—because it has taken it down—and so it can add the work to the filter's catalog. Such a system could then automate a "notice and stay down" regime. This would have benefits for all parties as it would likely result in a dramatic downturn in infringing postings and, concomitantly, in notices sent. The time and money savings for all parties could allow them to focus more on the difficult situations where arguably some transformative use has occurred and fair use might apply.

The second stage would take place if service providers cannot agree to or implement a meaningful private ordering notice and stay-down system. Congress should then consider amending the DMCA to add an affirmative duty for online service providers to monitor for, and remove, reposted works that they had already received notice on. In fact, there is already an analog to this in the DMCA requiring termination of users' accounts that have been repeat infringers under § 512 (i)(1)(A). In other words, while we might allow more leeway for first time infringers, and first posts of infringing works, repeats should not require repeated notices from copyright owners. In its strongest version, the proposal would also have Congress amend the DMCA so that service providers who do not implement a system to remove reposted

[11] Note that the innovation that made YouTube famous was an easy to use solution to this exact problem. Users could effortlessly post relatively large video files that they could not before.

[12] *See* Boyden, *supra* Note 4.

works would be taken outside the safe harbor for any reposting of already noticed works.

B. Proposal 2: Reassert or strengthen "red flag" provisions

The "don't monitor" advice and glamorization of a piracy culture means that many websites are in fact turning a blind eye to extensive infringement on their sites. Courts have grappled with whether the common law concept of "willful blindness" as a kind of constructive knowledge is consistent with, or abrogated by, the DMCA red flag provisions.[13] The Court of Appeals for the Second Circuit recently found that the DMCA limited, but did not abrogate, the applicability of willful blindness to online service providers.[14] The district court on remand failed to find willful blindness or actual knowledge even where there was an extremely high volume of apparently infringing works on the defendant's site (YouTube). Other courts have failed to find actual knowledge or awareness of facts and circumstances indicating infringing activity even in situations where significant infringement was occurring.[15]

My second proposal, then, is that Congress consider amending the red flag provisions to codify a stronger version of willful blindness than courts are currently using. Willful blindness could be defined to include any institutionalized policy prohibiting monitoring of content or consistent discouraging of employee monitoring or investigation of content posts. Evidence could be internal memos, emails, or other communications establishing a de facto "do not look" culture or policy in the case where the service provider's site has already significant takedown notices.

CONCLUSION

The notice and takedown system is not working for anyone—except possibly those who are posting flagrantly infringing works for their own purposes. Start-up online service providers are hit particularly hard as they cannot afford significant compliance staff. Similarly, independent artists cannot begin to keep up with the volume of takedown notices they would need to send to keep infringing versions of their work off the Internet. Returning to the origins of the DMCA safe harbors reminds us that a major initial justification was the common carrier doctrine: if we wanted open access to the Internet, then we had to immunize access providers from the bad actions of their subscribers. But this perfectly good notion does not stretch to online service providers who are not obligated to give open access to their sites, and at any rate are not providing access to the Internet itself. Accordingly, two solutions were recommended. First, notice and takedown should mean notice and stay-down in which service providers must take steps to limit the flagrant reposting of works already taken down under notice. Second, the red flag provisions should be strengthened by codifying a strong version of the willful blindness doctrine. Together, these solutions should reduce the enormous volume of takedown notices, while strengthening copyright enforcement. This could help reverse the "post-copyright" mentality permeating the innovation industry ecosystem and help artists earn the money they deserve for their works. The value of *both* our innovation and creative industries is too important to allow them to continue in conflict over a system neither of them support (in its current form). We can fix this, and we should.

Mr. COBLE. Thank you, Professor.

Professor Bridy?

TESTIMONY OF ANNEMARIE BRIDY, ALAN G. SHEPARD PROFESSOR OF LAW, UNIVERSITY OF IDAHO COLLEGE OF LAW

Ms. BRIDY. Mr. Chairman and Members of the Subcommittee, thank you for the opportunity to appear before you today. I appreciate the opportunity to address the effectiveness of Section 512 of Title 17. I would like to make two points about Section 512 that I believe are important to bear in mind as the Committee con-

[13] *See* Viacom Int'l Inc. v. YouTube, Inc., 679 F.3d 19 (2d Cir. 2012).

[14] *Id.*

[15] *See, e.g.,* UMG Recordings, Inc. v. Shelter Capital Partners, LLC, 667 F.3d 1022 (9th Cir. 2011).

templates the scope and shape of what Register Pallante has called the Next Great Copyright Act.

My first point is that the balancing of interests struck in Section 512 is both sound copyright policy and sound innovation policy. Section 512 has three groups of beneficiaries: owners of copyrights in digital content, users of copyrighted digital content, and online intermediaries that act as conduits and repositories for that content. Over the years, all three groups have been well served by the nuanced enforcement framework embodied in Section 512.

The second point I will make and one that I think may not be shared by some in the room is that Section 512 has proven to be resilient in the face of the Internet's evolving culture and technology. No one doubts that the scale of copyright infringement online is massive or that willful infringers online are adept evaders of enforcement. But perfect copyright enforcement online is a chimera. It is technically impossible and economically infeasible.

I think what Section 512 facilitates is not perfect enforcement but fair and workable enforcement. The notice and takedown regime in Section 512(c) has scaled well for enforcing copyrights in the voluminous content hosted by online service providers. Corporate copyright owners and OSPs have cooperated to automate the notice-and-takedown process to the greatest extent possible, thereby lowering the significant costs associated with enforcement for both groups.

For copyright owners who can't afford automated systems, many of the larger online user-generated content platforms provide fillable forms that can be electronically submitted. I think it would be a good idea for this to be expanded beyond the larger online UGC platforms. It is true that Section 512 has scaled less well for enforcing copyrights over peer-to-peer networks. Statistics show recently, however, that usage of such networks has been declining as legal download and streaming services expand for both music and video.

Under the division of labor created in Section 512, copyright owners are responsible for investigating and identifying specific instances of infringement, and online service providers are responsible for removing or disabling access to infringing material when they know about it. The framework imposes significant costs and responsibilities on both parties, in recognition of the fact that online enforcement must be collaborative if it is to be effective.

The legislative history of the DMCA frames the statute as a means of ensuring the continued global growth of the Internet. If growth of the Internet is a metric by which we can gauge the success of Section 512, then Section 512 has been successful. Fifteen years after the DMCA's enactment, there are over 2.4 billion Internet users worldwide, a growth rate of over 550 percent between 2000 and 2012.

As the Internet has grown and thrived, so too have the copyright industries, which have successfully adapted their business models to meet robust consumer demand for music and films distributed online at reasonable prices in digital formats.

According to the IFPI, global revenue from digital music sales was $5.8 billion in 2012, which represented growth of 8 percent

over the previous year. There were 4.3 billion paid downloads, a 12 percent global increase.

If the music industry stumbled in its initial transition to online distribution, it has since returned to a very secure footing. Thanks in no small part to the workable balancing of interests accomplished by Section 512, copyright owners, OSPs, and the American public are all sharing in the fruits of the Internet's cultural and commercial flourishing.

Thank you.

[The prepared statement of Ms. Bridy follows:]

United States House of Representatives
113th Congress
Committee on the Judiciary
Subcommittee on Courts, Intellectual Property, and the Internet

Statement of Annemarie Bridy
Alan G. Shepard Professor of Law
University of Idaho College of Law

March 13, 2014

Hearing: *Section 512 of Title 17*

THE ENDURING SOUNDNESS OF SECTION 512

Introduction

Committee Chairman Goodlatte, Subcommittee Chairman Coble, Ranking Member Conyers, and members of the subcommittee, thank you for the opportunity to appear before you today. I am Annemarie Bridy, the Alan G. Shepard Professor of Law at the University of Idaho College of Law. I have a doctorate in English literature and a law degree, and I have taught copyright and Internet law since entering the legal academy seven years ago.

I appreciate the opportunity to address the effectiveness of § 512 of Title 17, which was enacted as Title II of the Digital Millennium Copyright Act of 1998 (DMCA). I would like to make two points about Section 512 that I believe are important to bear in mind as the Committee contemplates the scope and shape of what Register Pallante has called the Next Great Copyright Act. The first point is that the balancing of interests struck in Section 512 remains both sound copyright policy and sound innovation policy. Section 512 has three groups of beneficiaries: owners of copyrights in digital content, users of copyrighted digital content, and online intermediaries that act as conduits and repositories for that content. Over the years, all three groups have been well served by the nuanced enforcement framework embodied in § 512.

The second point is that Section 512 has proven to be remarkably resilient in the face of the Internet's evolving culture and technology. No one doubts that the scale of copyright infringement online is massive or that willful infringers online are adept evaders of enforcement. Perfect copyright enforcement online is a chimera, however; it is technically impossible and economically infeasible. What § 512 facilitates is not perfect enforcement but fair and workable enforcement. The notice-and-takedown regime in § 512(c) has scaled well for enforcing copyrights in the voluminous content hosted by online service providers (OSPs). Corporate copyright owners and OSPs have cooperated to automate the notice-and-takedown process to the greatest extent possible, thereby lowering the significant costs associated with enforcement for both groups. For copyright owners who cannot afford automated systems, many of the larger online user-generated content platforms provide fillable forms that can be electronically submitted. Section 512 has scaled less well for enforcing copyrights over peer-to-peer (P2P) networks, but usage of such networks has been declining significantly as legal download and streaming services expand for both music and video.[1]

Under the division of labor created in § 512, copyright owners are responsible for investigating and identifying specific instances of infringement, and OSPs are responsible for removing or disabling access to infringing material when they receive notice of it. The

[1] *See* Angela Moscaritolo, *Illegal Music File-Sharing "Declined Significantly" in 2012*, PC MAG, Feb. 26, 2013, http://www.pcmag.com/article2/0,2817,2415896,00.asp.

framework imposes significant costs and responsibilities on both parties, in recognition of the fact that online enforcement must be collaborative if it is to be effective. To the extent that the costs of enforcement fall more heavily on copyright owners, the allocation is a reasonable one, particularly when the OSPs in question are, as they very often are, startups with very limited resources. Imposing on Internet startups a larger share of the enforcement burden than § 512 now does would erect a potentially insurmountable barrier to entry.

The legislative history of the DMCA frames the statute as a means of ensuring the continued global growth of the Internet.[2] If growth of the Internet is a metric by which we can gauge the success of § 512, then § 512 has been wildly successful. Fifteen years after the DMCA's enactment, there are over 2.4 billion Internet users worldwide, a growth rate of over 550% between 2000 and 2012.[3] As the Internet has grown and thrived, so, too, have the copyright industries, which have successfully adapted their business models to meet robust consumer demand for music and films distributed online in digital formats. According to the International Federation for the Phonographic Industry (IFPI), global revenue from digital music sales was $5.8 billion in 2012, which represented growth of 8% over the previous year.[4] There were 4.3 billion paid downloads, a 12% global increase.[5] If the music industry stumbled in its initial transition to online distribution, it has since returned to a very sure footing. Thanks in no small part to the workable balancing of interests accomplished by § 512, copyright owners, OSPs, and the American public are all sharing in the fruits of the Internet's cultural and commercial flourishing.

Discussion

1. Section 512 Is Both Sound Copyright Policy and Sound Innovation Policy.

In the "Online Copyright Infringement Liability Limitation Act" (Title II of the Digital Millennium Copyright Act (the "DMCA"), now codified at 17 U.S.C. § 512), Congress attempted to strike a balance among the rights and obligations of three separate constituencies, each holding substantial, and often conflicting, interests in regard to the distribution of copyrighted works on the Internet: Copyright owners, fearing massive infringement of their protected works;[6] OSPs, concerned with uncertain and potentially astronomical liability under ordinary principles of direct and secondary copyright infringement;[7] and Internet users, seeking

[2] *See* S. Rep. No.105-190, at 1–2 (1998) ("The 'Digital Millennium Copyright Act of 1998' is designed to facilitate the robust development and world-wide expansion of electronic commerce, communications, research, development, and education in the digital age.").
[3] *See* Internet World Stats: Usage and Population Statistics, available at http://www.internetworldstats.com/stats.htm.
[4] *See* IFPI Facts and Stats, available at http://www.ifpi.org/facts-and-stats.php.
[5] *Id.*
[6] *See* S. Rep. No. 105-190 (1998), at 8.
[7] *See id.* ("[W]ithout clarification of their liability, service providers may hesitate to make the necessary investment in the expansion of the speed and capacity of the Internet").

to participate in a growing Internet containing content "as diverse as human thought,"[8] a rich array of entertainment, information, goods, services, and ideas that was becoming, as the Supreme Court described it at the time, "a unique and wholly new medium of worldwide human communication."[9]

Over the last fifteen years, the scheme that Congress implemented in the DMCA, as interpreted by the federal courts in a number of significant and high-profile cases, has been resoundingly successful at forging an equitable balance among these conflicting interests. OSPs have a clear and straightforward set of ground rules to follow, allowing them to conform their operations to the law and, thereby, to avoid the specter of potentially crushing liability. At the same time, copyright owners, through the notice-and-takedown process spelled out in § 512(c), have simple and cost-effective means to curtail large numbers of unauthorized and infringing uses of their protected expression.

The benefits that Internet users – *i.e.*, the public – have reaped from this compromise have been profound. Along with its companion provision in federal law, 47 U.S.C. § 230,[10] which similarly provides OSPs with a safe harbor from claims arising from their users' activities, the DMCA has fueled extraordinary and unprecedented growth in innovative Internet services based entirely on user expression. This explosion of participatory (often referred to as "user-generated content," or "Web 2.0") online services has, in turn, fueled the growth and evolution of the Internet itself as a truly global communications platform, one that has become, as news headlines continue to remind us, a powerful tool for grass roots democratic movements around the world.[11] Thousands of Internet businesses, many of which are now household names across the globe – *e.g.,* Facebook, Twitter, YouTube, Blogger, Craigslist, Pinterest, Tumblr, Flickr, and many, many others – have emerged over the past fifteen years sharing one common characteristic: they provide virtually no content of their own (copyrightable or otherwise), but rely instead entirely on their users to make their sites valuable, engaging, and attractive for other users. Internet users have responded to the Web 2.0 phenomenon in truly breathtaking numbers.[12]

---

[8] *Reno v. American Civil Liberties Union*, 521 U.S. 844, 870 (1997).

[9] *Id.* at 850.

[10] 47 U.S.C. § 230(c)(1) protects "provider[s] [of] interactive computer service(s)" against claims arising from "any information provided by another information content provider," and has been applied to immunize service providers against a wide range of federal and state law claims. *See, e.g., Zeran v. America Online, Inc.*, 129 F.3d 327 (4th Cir. 1997); *Chicago Lawyers' Committee for Civil Rights Under Law, Inc., v. Craigslist, Inc.*, 519 F.3d 666 (7th Cir. 2008). By its express terms, however, § 230 does not encompass any intellectual property claims, *see* 47 U.S.C. § 230(d)(2) – precisely the gap that Congress filled in 1998 in Title II of the DMCA.

[11] *See, e.g.,* Jennifer Preston, *While Facebook Plays a Star Role in the Revolts, Its Executives Stay Offstage*, NY TIMES, Feb. 15, 2011, at A10 (describing role of Facebook and other "social media" websites in the 2011 uprising in Egypt).

[12] For example, recent estimates put the volume of user uploads to the video-sharing site YouTube at 100 hours of video per minute. *See* YouTube Statistics, http://www.youtube.com/yt/press/statistics.html. The photo sharing site Flickr has an average of 3,000 photos uploaded by users per minute. *See* Statistic Brain, http://www.statisticbrain.com/social-networking-statistics/. And Facebook users share 70 billion pieces of content per month. *See id.*

It is difficult, if not impossible, to imagine this development in the absence of strong DMCA safe harbors. It is no coincidence that *all* of the service providers listed in the preceding paragraph are based here in the United States, where Congress had the foresight in the early days of the Internet to understand that unlimited or uncertain service provider liability for third-party conduct would have drastic, negative consequences for the realization of the Internet's full economic and cultural potential.[13] Without the limitations on liability provided by the DMCA's safe harbors, the legal exposure for a service provider relying upon legions of users freely sharing content with one another would be unmanageable;[14] a business built on such a foundation could hardly have attracted financing in any rational marketplace, given the scope of the potential liability.

At the same time, the DMCA safe harbors provide copyright owners with a direct, efficient, and effective remedy against infringing conduct on the massive scale made possible by participatory media platforms. Through the notice-and-takedown procedures set forth in § 512(c), millions of infringing works have been quickly removed from circulation over the Internet through a process that avoids costly and time-consuming adjudication while simultaneously providing due consideration of the interests of all parties involved.[15]

The DMCA also protects Internet users, whose expressive rights could be compromised by over-enforcement. Sections 512(f) and (g) indicate deep Congressional concern with the implications of the notice-and-takedown system for ordinary Internet users, who could easily find themselves caught between overly-assertive copyright owners on the one hand and overly-risk-averse OSPs on the other. Section 512(g) protects OSPs against claims arising from their "good faith disabling of access to, or removal of, material or activity claimed to be infringing."[16] In the case of removals pursuant to the notice-and-takedown procedures, this protection applies *only* if the OSP has both provided notice of the removal to the users responsible for posting the material[17] and afforded those users an opportunity to provide a "counter notification" stating their "good faith belief that the material was removed or disabled as a result of mistake or misidentification."[18] If the OSP receives such a counter notification, it can invoke the safe harbor

---

[13] *See* S. REP. NO. 105-190 (1998), at 40 (noting that the "liability of online service providers and Internet access providers for copyright infringements that take place in the online environment has been a controversial issue," and that the Title II of the DMCA was designed to "provide[ ] greater certainty to service providers concerning their legal exposure for infringements that may occur in the course of their activities").

[14] A copyright holder is entitled to "an award of statutory damages for all infringements [of] any one work, . . . in a sum of not less than $750 or more than $30,000 as the court considers just," which can be increased at the court's discretion to $150,000 in cases involving "willful infringement." *See* 17 U.S.C. § 504(c)(1) and (2). At the scale and volume at which many user-generated content websites are operating, the potential infringement liability for even a day's worth of activity can mount into the millions or billions of dollars.

[15] *See Viacom Int'l Inc. v. YouTube, Inc.*, 718 F. Supp. 2d 514, 524 (S.D.N.Y. 2010) (noting that "the present case shows that the DMCA notification regime works efficiently: when Viacom over a period of months accumulated some 100,000 videos and then sent one mass takedown notice on February 2, 2007, by the next business day YouTube had removed virtually all of them"), *aff'd in part and vacated in part*, 676 F.3d 19 (2d Cir. 2012).

[16] 17 U.S.C. § 512(g)(1).

[17] 17 U.S.C. § 512(g)(2)(A).

[18] 17 U.S.C. § 512(g)(3)(C).

only if it (a) "promptly provides . . . a copy of the counter notification" to "the person who provided the [takedown] notification"[19] (*i.e.,* the copyright holder who initiated the takedown), and (b) "replaces the removed material and ceases disabling access to it not less than 10, nor more than 14, business days following receipt of the counter notice,"[20] unless, in that intervening period, the copyright holder has informed the OSP that it has "filed an action seeking a court order to restrain the subscriber from engaging in infringing activity relating to the material on the service provider's system or network."[21] Finally, § 512(g) provides that OSPs that *replace* infringing material in compliance with the counter notice, like those that *remove* infringing material in compliance with the original takedown notice, are not liable for any claims arising from that action.[22]

Section 512(f), for its part, helps to ensure that all of the information being provided in this complex notice-and-counter-notice scheme is accurate and reliable. It imposes liability on anyone who "knowingly materially misrepresents… that material or activity is infringing" (in the copyright holder's takedown notice) or that "material or activity was removed or disabled by mistake or misidentification" (in the user's counter-notice).[23]

The scheme is carefully wrought and finely balanced. It contemplates a world in which copyright owners initiate infringement remediation through § 512(c)(1)(C) takedown notices, knowing that they will be responsible for any material misrepresentations contained therein.[24] OSPs, relying on the information provided in the takedown notice, may remove the material so identified and inform the users responsible for uploading the material that they have done so. If the OSP receives a counter-notice from a user (who is likewise subject to the § 512(f) prohibition on material misrepresentations) informing the OSP that the user has a good faith belief that the material is *not* infringing, the OSP informs the copyright holder of the counter-notice and restores the material in question, unless the copyright holder chooses to file suit to protect its rights. In that case, the OSP leaves the disputed material off-line.

The goal Congress was pursuing in §§ 512(f) and (g) is clear: Infringing material should be rapidly and permanently removed, but *non*-infringing material should remain available and accessible. Users and copyright owners are charged with acting in good faith in declaring works to be in one category or the other. If OSPs respond to notices and counter-notices within the parameters laid out by the statute, they are effectively insulated from having to adjudicate what are, in the end, disputes between copyright owners and users. By carrying out their duties, OSPs

---

[19] 17 U.S.C. § 512(g)(2)(B).
[20] 17 U.S.C. § 512(g)(2)(C).
[21] *Id.*
[22] *See* 17 U.S.C. § 512(g)(4) (A service provider's compliance with the notification and counter-notification procedures set forth in § 512(g)(2) "shall not subject the service provider to liability for copyright infringement with respect to the material identified in the [takedown] notice provided under [§ 512(c)(1)(C)].").
[23] 17 U.S.C. § 512(f).
[24] *See Lenz v. Universal Music Group*, 572 F. Supp. 2d 1150, 1154-55 (N.D. Cal. 2008).

can be assured of protection against claims that they are infringing copyright (when they replace material that has been removed) and against claims that they are violating the contractual rights of their users (when they remove material at the direction of copyright owners).

Section 512 thus balances the competing interests of copyright owners, users, and OSPs in a nuanced enforcement regime that requires each group to make a proportional investment of time and resources to ensure that unlawful content is removed from circulation and lawful content remains available online. While § 512 does not guarantee perfect enforcement, it has successfully protected the interests of copyright owners through their difficult transition from brick-and-mortar to online distribution, and it has successfully protected user-generated content platforms in the early stages of their development, when success is uncertain and resources are scarce.

2. *Section 512 Has Been Resilient in the Face of an Evolving Internet.*

To facilitate the goal of ensuring the continued growth of the Internet, the DMCA was crafted to minimize obstacles to growth for both copyright owners, who would not expand the digital distribution of their works without assurances that they would be protected from "massive piracy," and OSPs,[25] who would not expand their sites and networks without assurances that they would be protected from massive liability for copyright infringement.[26] In light of the legislative history's focus on promoting Internet growth, the DMCA can be understood as a mechanism for simultaneously scaling up online copyright enforcement and scaling back online copyright liability—a unified solution designed to give rights owners the security necessary to expand content distribution and OSPs the security necessary to expand applications and network infrastructure.

The DMCA scales up enforcement while scaling back liability through provisions in Title I that prohibit circumvention of technological protection measures[27] and provisions in Title II that create safe harbors for service providers, conditioned on their assisting rights owners in the expeditious resolution of online copyright infringement disputes.[28] There are two provisions from Title II on which copyright owners have relied heavily in their efforts to make enforcement scale

---

[25] In the statute, the term "service provider" is defined broadly to include both providers of Internet access (ISPs) and providers of online services. *See* 17 U.S.C. § 512(k).

[26] *See* S. REP. NO.105-190, at 8 ("Due to the ease with which digital works can be copied and distributed worldwide virtually instantaneously, copyright owners will hesitate to make their works readily available on the Internet without reasonable assurance that they will be protected against massive piracy. . . . At the same time, without clarification of their liability, service providers may hesitate to make the necessary investment in the expansion of the speed and capacity of the Internet.").

[27] *See* 17 U.S.C. § 1201.

[28] *See* 17 U.S.C. § 512(a)–(d). As Edward Lee has noted, Title I expands copyright liability, while Title II contracts it. Edward Lee, *Decoding the DMCA Safe Harbors*, 32 COLUM. J.L. & ARTS 233, 233 (2009).

for the digital environment: § 512(c), which establishes the notice-and-takedown framework,[29] and § 512(h), which allows rights owners to serve subpoenas on service providers outside of litigation to obtain the identities of alleged infringers.[30] Tacitly premised on the reality that litigation is not an efficient means of resolving the voluminous infringement claims that arise in the context of online services, § 512(c) and § 512(h) require service providers to act cooperatively with rights owners, without intervention from a court, to remove allegedly infringing content from their services and to identify those ostensibly responsible for its distribution.

Despite initial resistance from both groups, OSPs and rights owners have adapted quite well over the last fifteen years to doing business within the parameters defined by the DMCA's notice-and-takedown system.[31] On YouTube, for example, the § 512(c) notice process can be initiated with the click of a mouse following completion of a simple, fillable online form.[32] Facebook, Scribd, and Pinterest also offer standardized online notice forms that can be submitted electronically.[33] The forms are structured to comply with the requirements of § 512(c)(3)(A), so that even copyright owners lacking counsel or legal sophistication can easily seek redress. On the Internet's most popular content-sharing sites, the notice-and-takedown system has come to operate as a well-oiled, always-on copyright enforcement machine.

Notwithstanding this fact, corporate rights owners have argued since the DMCA's enactment, and more loudly since the dawn of Web 2.0, that the notice-and-takedown machinery in the DMCA is inadequate to protect their rights.[34] Viacom, for example, has pressed this argument in ongoing litigation against YouTube, now on appeal for the second time in the Second Circuit.[35] In its initial opinion granting YouTube's motion for summary judgment based

---

[29] *See* 17 U.S.C. § 512(c); *see also* Jennifer M. Urban & Laura Quilter, *Efficient Process or "Chilling Effects"? Takedown Notices under Section 512 of the Digital Millennium Copyright Act*, 22 SANTA CLARA COMPUTER & HIGH TECH. L.J. 621, 624–31 (2006) (giving a detailed explanation of the mechanics of notice and takedown under the DMCA).

[30] *See* 17 U.S.C. § 512(h) ("A copyright owner or a person authorized to act on the owner's behalf may request the clerk of any United States district court to issue a subpoena to a service provider for identification of an alleged infringer . . . . The request may be made by filing with the clerk . . . a copy of a notification described in subsection (c)(3)(A); a proposed subpoena; and a sworn declaration to the effect that the purpose for which the subpoena is sought is to obtain the identity of an alleged infringer and that such information will only be used for the purpose of protecting rights under this title.").

[31] *See* Jerome H. Reichman, Graeme B. Dinwoodie, & Pamela Samuelson, *A Reverse Notice and Takedown Regime to Enable Public Interest Uses of Technically Protected Copyrighted Works*, 22 BERKELEY TECH. L.J. 981, 994 (2007) (concluding that "the past decade of experience with the DMCA notice and takedown regime suggests that a relatively balanced and workable solution to this particular dual-use technology problem has been found.").

[32] *See* YouTube Copyright Infringement Notification, https://www.youtube.com/copyright_complaint_form.

[33] *See, e.g.*, Pinterest Copyright Infringement Notification, http://www.pinterest.com/about/copyright/dmca/.

[34] *See, e.g.*, Anthony Bruno, *RIAA to Google: Help Us Fight Piracy*, BILLBOARD.BIZ, Aug. 19, 2010, http://www.billboard.biz/bbbiz/content_display/industry/e3if6a7faa5026473498f596f5a73238fa5 (reproducing the text of a letter from the RIAA and other industry groups to Google CEO Eric Schmidt, in which the senders state that "[t]he current legal and regulatory regime is not working for America's creators"); Declan McCullagh, *RIAA: U.S. Copyright Law 'Isn't Working,'* CNET NEWS (Aug. 23, 2010), http://news.cnet.com/8301-13578_3-20014468-38.html (quoting RIAA president Cary Sherman).

[35] *See Viacom*, 940 F. Supp. 2d 110, 113 (S.D.N.Y. 2013) (granting summary judgment to YouTube on remand form the Second Circuit). In its complaint, Viacom accused Google of "shift[ing] the burden entirely onto copyright

on the company's consistent compliance with the terms of the DMCA's safe harbor provisions, the district court rejected Viacom's contention that the notice-and-takedown system is an enforcement failure.[36] On the contrary, the court concluded, evidence in the record suggested that the system is both functional and efficient: "Indeed, the present case shows that the DMCA notification regime works efficiently: When Viacom over a period of months accumulated some 100,000 videos and then sent one mass take-down notice on February 2, 2007, by the next business day YouTube had removed virtually all of them."[37]

Viacom's power to eliminate 100,000 instances of alleged infringement overnight, with a single notice, is a testament to the DMCA's success in making online enforcement scalable without creating growth-inhibiting burdens for online services whose business models are founded on content sharing. Although copyright owners continue to advocate interpretations of the DMCA that would require OSPs to be more proactive in their efforts to enforce third-party copyrights, the DMCA is quite clear that active monitoring for infringing content is not a burden that Congress saw fit to allocate to service providers when it balanced the need to make the Internet safe for copyright owners against the need to promote growth and innovation in online services. That allocative choice was reasonable in 1998, and it remains reasonable in 2014.

It is not the end of the story, however, to say that the DMCA's enforcement machinery has proven to be scalable with respect to service providers that host content for users. The DMCA has not scaled well for enforcing copyrights infringed by means of P2P file-sharing networks, because the statute was designed primarily to address infringements that occur when users upload copyrighted material to a provider's servers or link to infringing content posted by others.[38] When it enacted the DMCA, Congress did not anticipate the distributed nature of P2P networks or the correspondingly distributed nature of the infringement they would enable. High-volume infringement is relatively easy to detect and combat when the content in question is fixed on the servers of easily identifiable intermediaries with duly designated DMCA agents;[39] it becomes much harder to detect and combat when that content is in transit across a distributed network whose membership is anonymous and dynamic.

---

owners to monitor the YouTube site on a daily or hourly basis to detect infringing videos and send notices to YouTube demanding that it 'take down' the infringing works." Complaint for Declaratory and Injunctive Relief and Damages at ¶ 6, *Viacom*, 718 F. Supp. 2d 514 (No. 1:07CV02103). In reality, the law puts that burden squarely on rights owners like Viacom; the DMCA expressly does not condition eligibility for safe harbor on a service provider's monitoring its service for infringing content. *See* 17 U.S.C. § 512(m) (2006) ("Nothing in this section shall be construed to condition the applicability of subsections (a) through (d) on a service provider monitoring its service or affirmatively seeking facts indicating infringing activity . . . .").

[36] *Viacom*, 718 F. Supp. 2d at 524.

[37] *Id.*

[38] *See* Niva Elkin-Koren, *Making Technology Visible: Liability of Internet Service Providers for Peer-to-Peer Traffic*, 9 N.Y.U. J. LEGIS. & PUB. POL'Y 15, 41 (2006) ("[The DMCA] was designed to address a mainly centralized architecture . . . . Peer-to-peer architecture, by contrast, is decentralized and allows users to search for files stored in the libraries of other users.").

[39] *See* 17 U.S.C. § 512(c)(2) (requiring designation of an agent to receive notifications of claimed infringement).

The safe harbor provisions of § 512 cover four types of service provider functions: transitory digital network communications (i.e., routing and transmission), system caching, storage on behalf of users, and information location.[40] Service providers performing each of these functions, with the significant exception of routing and transmission, are required to comply with the notice-and-takedown framework in § 512(c).[41] The DMCA's primary focus on user-uploaded material residing on the systems of OSPs reflects the then-current state of the art in network architecture.[42] Before P2P file-sharing applications came onto the scene, the most copyright-relevant function an online service provider performed was storage on behalf of users—the function covered by the safe harbor in § 512(c).[43] In P2P networks, however, files are not uploaded to a provider's server; they remain instead on the users' own systems, from which other users directly retrieve them.[44] In this architecture, the most copyright-relevant functions a service provider performs are routing and transmission—the functions covered by the safe harbor in § 512(a).[45] Because the DMCA was designed to deal with providers serving a centralized file-storage function, it has proven a poor fit in cases involving P2P, where the service provider functions only as a pass-through or conduit for the transfer of infringing material.[46]

The DMCA's exemption of providers of routing and transmission services (a.k.a. "mere conduits") from the notice-and-takedown requirements in § 512(c) is entirely consistent with the fact that such providers do not store or control user content.[47] Nevertheless, the exemption has operated in the context of P2P file-sharing to negate the scalable enforcement mechanism that notice and takedown provides. Inasmuch as P2P file-sharing shifts the locus of infringing activity from the storage function to the transmission function, it places such activity beyond the knowledge and control of the OSP and thus beyond the reach of the enforcement scheme created by § 512(c).[48]

---

[40] *See id.* § 512(a)–(d).

[41] For providers of system caching, the requirement is found at § 512(b)(2)(E). For providers of storage on behalf of users, the requirement is found at § 512(c)(1)(C). For providers of information location tools, the requirement is found at § 512(d)(3). There is no corresponding requirement for providers of routing and transmission services.

[42] *See* Elkin-Koren, *supra* note 38, at 41.

[43] *See* Annemarie Bridy, *Graduated Response and the Turn to Private Ordering in Online Copyright Enforcement,* 89 OR. L. REV. 81, 97 (2010).

[44] *Id.* (citing A&M Records, Inc. v. Napster, Inc., 239 F.3d 1004, 1011 (9th Cir. 2001) (explaining how a P2P system works)).

[45] *Id.*

[46] *Id.*

[47] *See* Recording Indus. Assoc. of Am. v. Charter Commc'ns, Inc., 393 F.3d 771, 776 (8th Cir. 2005) (explaining that the absence of the notification and remove-or-disable-access provisions from § 512(a) "makes sense where an ISP merely acts as a conduit for infringing material . . . because the ISP has no ability to remove the infringing material from its system or disable access to the infringing material").

[48] Although in-network filtering and blocking technologies have greatly evolved since the passage of the DMCA, and broadband providers actively manage network traffic in ways that were not then possible, the statute presupposes a passive transit model; § 512(a) requires that material be transmitted through the qualifying provider's system "through an automatic technical process and without selection of the material by the service provider." 17 U.S.C. § 512(a)(2).

As a consequence of the exemption of conduit providers from the notice and takedown requirements of § 512(c), the expedited subpoena provision in the DMCA—§ 512(h)—has also been held inapplicable to these providers.[49] This is because the application for a subpoena under § 512(h) must include a copy of the notice described in § 512(c)(3)(A).[50] The notice described in § 512(c)(3)(A) must identify, among other things, "the material that is claimed to be infringing . . . and that is to be removed or access to which is to be disabled" by the service provider.[51] In reaching the conclusion that the subpoena power in § 512(h) cannot be held to extend to providers covered by § 512(a), the Courts of Appeals for the D.C. and Eighth Circuits found it dispositive that § 512(c)'s notice-and-takedown requirements do not apply on the face of the statute to providers that act simply as conduits for information.[52] After all, how can § 512(h), which expressly requires an applicant to submit a copy of a notice compliant with § 512(c), apply to providers that are not subject to § 512(c) in the first place?[53] It makes more sense to conclude, as these Circuits did, that the references to § 512(c) in § 512(h) restrict the applicability of § 512(h) to providers that are able to remove or disable access to specific material.[54] In short, courts have held, there is an assumption underlying § 512(h) that a subpoena recipient will actually be in a position to take down material identified as infringing.

It is possible, perhaps even probable, that § 512(h) would have been drafted differently if P2P technology had existed at the time.[55] In light of that possibility, rights owners have persuaded some judges that the subpoena provision should be held to apply to service providers covered by §512(a), despite the assumption underlying § 512(h) that subpoena recipients can remove or disable access to specific material.[56] In the face of unanticipated technological developments, these judges look past the letter of the DMCA to make it scale for P2P file-sharing. Such recuperative acts are plainly beyond the judiciary's competence, however, as the D.C. Circuit said in *Recording Industry Association of America, Inc. v. Verizon Internet Services*:

---

[49] *See Charter Commc'ns, Inc.*, 393 F.3d at 777; Recording Indus. Ass'n of Am., Inc. v. Verizon Internet Servs., 351 F.3d 1229, 1238 (D.C. Cir. 2003).
[50] *See* 17 U.S.C. § 512(h)(2)(A).
[51] 17 U.S.C. § 512(c)(3)(A).
[52] *See Charter Commc'ns, Inc.*, 393 F.3d at 776 (explaining that each safe harbor that covers a function allowing the ISP to remove or disable access to infringing material (i.e., storage, system caching, or linking) contains a remove-or-disable access provision); *Verizon Internet Servs., Inc.*, 351 F.3d at 1236–37 ("We agree that the presence in § 512(h) of three separate references to § 512(c) and the absence of any reference to § 512(a) suggests the subpoena power of § 512(h) applies only to ISPs engaged in storing copyrighted material and not to those engaged solely in transmitting it on behalf of others.").
[53] *Verizon Internet Servs., Inc.*, 351 F.3d at 1236–37. I have argued elsewhere that judicial interpretations of § 512(i)—the DMCA's repeat infringer provision, which applies to all types of providers seeking safe harbor under § 512—have potentially created a "back door" requirement for conduit providers to have in place a system for receiving and responding to notices of infringement sent by rights owners. *See* Bridy, *supra* note 43, at 98.
[54] *See Charter Commc'ns, Inc.*, 393 F.3d 771; *Verizon Internet Servs.*, 351 F.3d 1229. *But see* Lateef Mtima, *Whom the Gods Would Destroy: Why Congress Prioritized Copyright Protection Over Internet Privacy in Passing the Digital Millennium Copyright Act*, 61 RUTGERS L. REV. 627, 673 (2009).
[55] *See Verizon Internet Servs.*, 351 F.3d at 1238 ("Had the Congress been aware of P2P technology, or anticipated its development, § 512(h) might have been drafted more generally.").
[56] *See Charter Commc'ns, Inc.*, 393 F.3d at 778 (Murphy, J., dissenting) (asserting that § 512(h) should apply to conduit providers); Recording Indus. Ass'n of Am. v. Verizon Internet Servs., 240 F. Supp. 2d 24, 30 (D.D.C. 2003) (holding that § 512(h) applies to conduit providers seeking safe harbor under § 512(a)), *rev'd*, 351 F.3d 1229.

> It is not the province of the courts . . . to rewrite the DMCA in order to make it fit a new and unfor[e]seen [I]nternet architecture, no matter how damaging that development has been to the music industry or threatens being to the motion picture and software industries. The plight of copyright holders must be addressed in the first instance by the Congress . . . .[57]

In the absence of Congressional action to bring P2P file-sharing and the providers whose networks are used for it within the scope of §§ 512(c) and (h) of the DMCA, rights owners have been unable to avail themselves of the statute's mechanisms for making online copyright enforcement scalable by allowing it to operate outside of litigation.[58]

Fortunately, however, effective non-statutory mechanisms have been created to fill the vacuum in the P2P context. Conduit OSPs – § 512(a) providers of broadband Internet access – have cooperated with copyright owners outside the express framework of § 512. One solution they have jointly embraced is the Copyright Alert System (CAS).[59] In CAS, monitoring agents working for copyright owners identify and report in bulk to broadband providers the Internet Protocol addresses of alleged P2P file-sharers. The broadband providers then match the flagged addresses to customer accounts and send notices ("copyright alerts") to the account owners. If repeated notices prompt no change in behavior, the broadband provider eventually imposes a sanction. On many college and university campus networks, a similar, scalable solution has been implemented; information technology personnel have adopted the Automated Content Notification System (ACNS), which was developed by NBC Universal and Universal Music Group to facilitate and expedite the handling of P2P copyright infringement notices.[60] CAS and ACNS represent non-statutory solutions to the problem of infringement over P2P networks. Although Congress in § 512(h) did not anticipate (and, indeed, could not have anticipated) P2P technology, copyright owners and OSPs have collaborated in the broader spirit of § 512 to work around the limitation. Moreover, as usage of P2P networks for illegal file-sharing recedes in favor of legal download and streaming services, the file-sharing problem is also receding.

It is virtually impossible for any law, no matter how well crafted, to keep pace with rapid changes in computer and telecommunications technology. The growth of the Internet has disrupted the copyright system in ways that are still being revealed. Time has shown, however, that the equitable balancing of interests established in § 512 remains viable. Copyright owners,

---

[57] *Verizon Internet Servs.*, 351 F.3d at 1238; *see also* Recording Indus. Ass'n of Am. v. Univ. of N.C. at Chapel Hill, 367 F. Supp. 2d 945, 953 (M.D.N.C. 2005) ("While the RIAA's argument at first blush is tempting, the Court rejects it because it would necessarily amount to the rewriting of the statute.").

[58] *See* Annemarie Bridy, *Is Online Copyright Enforcement Scalable*, 13 VAND. J. ENT. & TECH. L. 695, 719-25 (2011) (explaining that some copyright owners fell back on mass John Doe litigation to try to identify and seek settlements from alleged P2P infringers).

[59] *See* Annemarie Bridy, *Graduated Response American Style: "Six Strikes" Measured Against Five Norms*, 23 FORDHAM INTELL. PROP., MEDIA & ENT. L.J. 1 (2012).

[60] *See* ACNS, ACNS Specifications, http://www.acns.net/spec.html (stating that "ACNS can be used to deliver notices for various environments, including P2P, cyberlockers, UGC sites, link sites, Usenet, and other environments").

OSPs, and users continue to evolve in their attitudes and practices with respect to online copyrighted content. Online piracy is waning with the expansion of innovative service offerings from copyright owners, who have come to embrace online distribution as a revenue opportunity instead of fearing it as an existential threat. Section 512 has provided a crucial foundation for the growth of the Internet and the development of innovative services for Internet users. It has allowed Web 2.0 startups to flourish, and it has spurred incumbent corporate copyright owners to imagine new ways of reaching audiences that are willing to pay in ever-increasing numbers for lawful, professionally developed content.

Mr. COBLE. Thank you, Professor Bridy.

Mr. Doda?

Mr. Doda, I think your mic is not activated.

TESTIMONY OF PAUL F. DODA, GLOBAL LITIGATION COUNSEL, ELSEVIER INC.

Mr. DODA. Thank you, Chairman Goodlatte, Chairman Coble, Ranking Member Conyers, Ranking Member Nadler, and Members of the Subcommittee. I appreciate this opportunity to address the Committee on Elsevier's behalf.

Elsevier is a 130-year-old publisher of books and journals. We also create technology-driven products that allow researchers to leverage massive amounts of data to pursue science and medical breakthroughs.

I have been a lawyer for 23 years, the past 7 at Elsevier. During that time, I have become familiar with the challenges that Elsevier faces addressing online infringements under the DMCA. There are many challenges for a company like Elsevier. With global content and a large portfolio of works to cover, we can't possibly search for all of our content all over the Internet. We focus on sites with the most Elsevier content.

The main challenges we face with these sites are a growing volume despite having issued notices for years, the need to repeatedly send notices for the same infringing works, and the speed at which infringing copies are re-uploaded. It has truly become impossible for Elsevier to keep pace.

Elsevier issued over 240,000 takedown notices for book infringements in 2013, with zero counter-notifications. That is because we take our DMCA responsibilities seriously. We take three steps to verify that entire copies of our books are being offered before issuing notices, but there is a cost for playing by the rules. It makes it more difficult to keep pace with the infringements.

Here are some examples from 2013. The main sites that comply with takedowns continue to have 500 to 1,000 infringements monthly without any significant drop-off. Many of these infringements are for the same books re-uploaded to the same sites. On a site called 4shared, we found a book re-uploaded 571 times, and another book 384 times. On a site called Uploaded, we found a book re-uploaded 231 times and another book 112 times. It takes, on average, seven to 9 days to have books taken down. During that time, the books are exposed to millions of users for download.

I have one final example beyond book piracy. It shows the damaging ripple effect that can occur from piracy. Elsevier publishes confidential exams used to prepare nursing students for national licensing requirements. In some instances, the exams have been stolen from schools and offered on the Internet. We have issued takedown notices to certain sites with little effect. We have not been able to prevent the stolen exams from being sold by the same sellers because takedowns have not been uniformly honored and repeat infringer policies have not been adequately enforced.

When stolen nursing exams are shared freely, it hurts not only Elsevier; it undermines the academic process itself. It also affects the quality of nurses trusted with patient care.

We think these examples show that the system is out of balance and breaking down. But the question, of course, is how can we make improvements to address these challenges without going too far, without stifling creativity and freedom of expression. We think the answer is in reasonable technical measures like filtering, which is not a new idea but one that we think should be revisited urgently by all good-faith stakeholders.

The most successful filtering solutions have resulted from collaboration between rights holders and sites with significant user-uploaded content. In the book publishing industry, we think the website Scribd is a good example of how targeted filtering can be applied in good faith and work in a fair and effective manner. Scribd uses fingerprinting that involves the creation of a digital reference database containing unique characteristics of copyrighted books. User uploads are checked for matches against the reference database. The fingerprint system uses best practices that we endorse. It only catches matches, and users are promptly notified so that they can dispute the rejection of their uploaded content.

But while Scribd is a good example of what works, we need more examples of collaboration in the publishing industry. That is why we would urge Congress to help bring together all relevant stakeholders to work on standard measures to reduce online infringement. Without that intervention and oversight, there are not sufficient incentives for the parties to come together in a timely way.

Elsevier remains concerned, however, that notwithstanding a government-mandated process to create voluntary measures, some sites that need them the most will drag their feet. If these sites refuse to consider reasonable measures that peer companies are adopting, it may be necessary for Congress and the courts to step in to provide remedies to copyright owners.

Today, Elsevier sends hundreds of notices to the same sites for the same books year after year. It does so in good faith in compliance with the DMCA as it exists today. If these sites will not meet us halfway, in fairness, we should not be left without a remedy.

Thank you for the opportunity to testify today.

[The prepared statement of Mr. Doda follows:]

Written Statement for the Record

By Paul F. Doda
Global Litigation Counsel
Elsevier Inc.

Hearing on "Section 512 of Title 17"

March 13, 2014

United States House of Representatives
Committee on the Judiciary
Subcommittee on Courts, Intellectual Property, and the Internet

Thank you Chairman Goodlatte, Chairman Coble, Ranking Member Conyers, Ranking Member Nadler and members of the Committee. My name is Paul Doda. I am the Global Litigation Counsel at Elsevier Inc. With our parent company, we have almost 15,000 US employees and Elsevier has major offices in New York, Pennsylvania, Missouri, California and Massachusetts. I appreciate this opportunity to provide the Committee with the perspective of a company that is both a 130-year old publisher of copyrighted content and a company that embraces the power of technology to fuel innovation. In addition to creating and publishing world class medical books, reference works and journals, Elsevier uses technology to create products that allow researchers and clinicians to leverage massive amounts of information to pursue science and medical breakthroughs.

Elsevier's statement will provide examples of the challenges it faces in relying on DMCA Section 512 to address the unauthorized distribution of its copyrighted works online and will urge actions under the current statute that can improve copyright protection without unreasonably burdening legitimate web sites, service providers and internet users.

Introduction

Since Congress enacted the Digital Millennium Copyright Act ("DMCA") in 1998, major technological advances – like the ability to connect billions of people around the world to information on the internet at increasingly faster speeds -- have had a positive impact on society and have opened a world of future possibilities for the internet. Technology has paved the way for new sites and service providers that did not exist fifteen plus years ago, many of them crucial to how we live today.

An unfortunate byproduct of these positive developments is that the unauthorized sharing of copyrighted works has grown exponentially. The notice and takedown system has become overtaxed by an explosion of sites and services globally and the increased speeds and methods by which they can allow copyrighted works to be shared. As a consequence, companies like Elsevier must send more notices to more sites globally, for the same infringing files, the same infringing works, and the same infringing users, in what has become a largely futile attempt to keep pace. The system is imposing increasing costs in time, resources and money for both conscientious "senders" and "receivers" of notices alike, but resulting in little to no effective protection of copyrighted works.

The problem is made worse by certain sites that do, in effect, harbor infringement. Some sites exploit weaknesses in the takedown system to profit from persistently uploaded and re-uploaded infringements. They rely on desirable copyrighted content to draw users to their sites (to whom they serve ads or charge premiums for faster downloads), with takedowns at best only temporary disruptions before unauthorized copyrighted works reappear or get replaced by other infringing material. As to these sites, copyright owners like Elsevier often provide notices concerning a particular work only to see a new unauthorized copy or link to the same work reappear on the same site right after it is taken down.

Elsevier's Specific Experiences with DMCA Takedowns

Specific details and examples from Elsevier's 2013 takedown program for infringing copies of books illustrate these challenges.

- Like most large publishers and other global distributors of copyrighted works, Elsevier employs a third party specialist to search for infringements and issue its takedown notices. In 2013, Elsevier issued an average of 20,537 takedown notices a month, a total of 246,441 notices. While this is a relatively large volume for a publisher, it is likely only a fraction of the infringements of Elsevier's works available on the internet because not all sites can be readily searched and there are limits to Elsevier's and its vendor's resources. It is also just a fraction of the tens of millions of notices sent to sites and service providers each month.[1]

- Month over month, the same sites with high volumes of Elsevier works that respond to takedowns have 500 to 1,000 infringements, suggesting that takedown notices, even when honored, have little to no effect on the steady overall volume of infringing works on the sites.

- The *same books* are repeatedly re-uploaded on the *same sites* hundreds of times after being taken down, such as

  a Genetics book *571 times* on www.4shared.com;

  a Human Anatomy book *384 times* from on www.4shared.com;

  an Ophthalmology book *298 times* on www.4shared.com;

  a Physiology book *281 times* on www.4shared.com;

  an Embryology book *245 times* on www.4shared.com;

  a Psychiatry book *231 times* on www.uploaded.net;

  a Neurology book *112 times* on www.uploaded.net;

  a Psychiatry book *373 times* on www.share-online.biz; and

  6 other book titles removed over *100 times each* from many other sites.

- Even the sites that are the most responsive to takedowns take on average *7 days* to remove works, with all others taking on average *9 days*, and this does not account for the time it takes Elsevier's agent to discover and verify the infringements. During this time, the books can be and are being downloaded by millions of users, again raising the question of whether takedowns have any meaningful remedial effect at all.

[1] Google alone receives over 20,000,000 takedown notices a month. See http://www.google.com/transparencyreport/removals/copyright/.

- Over a 3-month period in early 2013, one site removed 6,195 infringing links in response to takedown notices, but later re-enabled 6,024 of the links that were previously removed (without cause or valid counter-notice) (www.nakido.com).

- Another site with among the highest volume of infringements simply did not respond to approximately 8,500 notices sent to the site in 2013 (www.rus.ec).

- Finally, Elsevier publishes confidential nursing exams for proctored use by professional nursing schools to prepare students for national licensing requirements. Despite notifying several sites that such exams can never be offered for sale legally and that offers for them should be removed, many sites have not complied or have not invoked their repeat infringer policies, allowing the same anonymous sellers to continue to offer the stolen exams. This problem not only hurts Elsevier and other publishers of confidential exams that are meant to be administered and used strictly by educators, but also subverts the academic process itself and the quality and qualifications of students later entrusted with providing health care to patients.

An enormous number of takedown notices are sent every day by companies in the content industries and independently by authors, artists and musicians, but mistakenly issued notices are very rare. Elsevier received *no counter notices* for its book infringement takedown program in 2013.

We take great care to ensure that our takedown notices are only issued in clear instances of infringement. Elsevier's vendor uses both automated and manual procedures to make sure that it accurately identifies infringing content. It first searches for book "metadata" to identify infringements, then uses two *manual* reviews by trained staff to verify that a full copy of the work is involved. This process is followed for *every* instance of potential infringement to guard against "false positives." The time and resources it takes for this commitment to accuracy make it even more difficult to keep up with the constant wave of infringements. Moreover, not all publishers have the same resources as Elsevier, making it still more difficult for them to identify infringements or to address constant re-uploads of copyrighted works.

Despite the hundreds of thousands of notices Elsevier sends in good faith each year, Elsevier must unfortunately "compete" against thousands of sites that enable unauthorized access to free copies of virtually any of its copyrighted works, at any time. For Elsevier and other global distributors of copyrighted works, the infringements are simply becoming too widespread, too continuous, and too persistent to locate and efficiently address them, let alone to do so in a cost-effective manner with any lasting effect.

Reasonable Technical Measures

While the views of content providers and online service providers may differ radically regarding which parties should bear certain burdens in addressing large scale piracy, there should be no dispute that all parties who participate in the takedown system fairly and in good faith would benefit from reducing the volume of notices that must be sent and acted upon.

Elsevier believes the best way to accomplish that goal, and to address the constant reappearance of the same unauthorized works, is through the use of reasonable technical measures. Section 512(i) of the DMCA suggests that in 1998 Congress expected copyright owners and service providers to develop "standard technical measures" to identify and protect copyrighted works and envisioned a "multi-industry standards process" to develop a "broad consensus" on appropriate measures.

Congress' vision of the interested parties voluntarily coming together to collaborate on infringement issues in the digital age was a worthy goal, but the stakeholders have not made substantial progress toward devising or implementing reasonable technical measures in the past 15 years. To spur progress, Congress should direct that there be a broadly inclusive, multi-stakeholder, standards- setting process to recommend voluntary technical measures that can reduce online infringements without materially impeding the legitimate functionality of sites or unreasonably preventing legal uses of copyrighted works. We favor bringing all relevant stakeholders (including content owners, site and service providers, user advocacy groups and technology companies) together for this purpose under the guidance of an expert governmental agency with relevant technological expertise.[2]

Common Principles for Filtering

Elsevier believes that a good starting point for establishing standard technical measures are the *Principles for User Generated Content Services* (UGC Principles) developed several years ago by major technology companies and global distributors of copyrighted video and audio content for filtering of that content.[3] We think that, while more details need to be considered, the principles can apply equally or be adapted to address text-based content. Among those principles are:

- That *matching* copies of a copyrighted work are proper subjects for automatic content filtering on upload;
- That care must be taken to ensure that automatic content filtering *only* limits uploads that substantially match a copyrighted work;[4]
- That care must be taken to ensure that *users are promptly notified* and have *an opportunity to dispute* the filtering of content;
- That as meaningfully *enhanced filtering technologies* become available *on reasonable terms* they *should be adopted*; and

[2] Digital rights advocates have also suggested that Congress could enlist expert advisory bodies like the former Office of Technology Assessment to guide copyright reforms in response to challenges presented by new technologies. See Pamela Samuelson, *Is Copyright Reform Possible*, 126 HARV. L. REV. 740, 765-66 (2013).

[3] See Principles for User Generated Content Services at http://www.ugcprinciples.com/index.html.

[4] See Fair Use Principles for User Generated Video Content at https://www.eff.org/pages/fair-use-principles-user-generated-video-content, para. 2, suggesting that, for filtering purposes, only matching copies where "nearly the entirety (e.g., 90% or more)" of the challenged content is comprised of a single copyrighted work should be prevented or removed.

- That *infringement claims should not be brought against sites that adopt filtering technologies in good faith* for any copyrighted content that remains on the site despite good faith efforts.

"Fingerprinting" systems seem to be an appropriate and effective method to ensure that only copies that are complete or a substantially complete copy of a copyrighted work are prevented or removed by sites. Elsevier agrees with the goal of carefully ensuring that technical measures only prevent or remove clear infringements. That is essentially the same standard Elsevier and other publishers use to verify infringements for purposes of accurately issuing takedown notices.[5]

If well-intentioned sites and service providers have legitimate concerns that implementing certain technical measures would be unduly costly or would materially impact the legitimate functionality of their site or service, these concerns can and should be addressed in the multi-stakeholder standards-setting process. It is likely that the process will not yield a "one size fits all" approach. Rather, a range of recommended measures, including various filtering technologies, can likely be developed, taking into account the variety of sites at issue and their capabilities and functions.

Different measures may apply to different sites and the recommended measures will not apply to all sites. For example, not all sites are structured, intended or used for uploading or downloading content on a large scale. Technical measures may be unnecessary, impractical or unreasonable for such sites, and other approaches, like manual reviews of uploaded content, may even be preferred by low volume sites. The adoption of measures by these sites should be voluntary and they may appropriately choose to continue to primarily rely on notices and takedowns to address infringements.

There Should Be Incentives for the Adoption of Voluntary Technical Measures

Where technical measures are appropriate, adoption of them can dramatically reduce the challenges presented by large scale infringement. There are already successful examples like www.scribd.com, which has successfully used filtering mechanisms to reduce unauthorized uploads and re-uploads of infringing books, with good results: a sharp reduction of infringements without harm to the site's legitimate functionality, and reduced burdens and costs related to takedown notices.[6] Google's Content ID is another example, where one of the world's largest service providers created powerful and precise filtering technology that can readily distinguish between complete copies of works and partial copies or clips.

Stakeholders should discuss meaningful incentives for the implementation of technical measures to address constantly recurring infringements of the same works. As it stands now, there are possibly "perverse incentives" against adoption, such as the fear that using technical

[5] Automated content filtering systems do not currently seem suitable to address uploaded copies of works that might require more detailed infringement analysis or "Fair Use" analysis.

[6] Scribd uses a "fingerprint" system. "Fingerprinting" for books involves the creation of digital reference files by extracting unique characteristics from the digital content, which can be stored in a database and queried as content is uploaded to detect whether the content is infringing.

measures could create "red flag" knowledge of infringement that would expose a site to liability, or that adopting technical measures while competitors do not adopt them will be a competitive disadvantage. One way to incent standard technical measures is for copyright holders to adhere to the UGC Principle that infringement claims should not be brought against sites that adopt reasonable technical measures in good faith. Other means to create incentives should be explored by all relevant stakeholders.

Congress May Have to Incentivize the Adoption of Standard Technical Measures

On the other hand, as noted in Elsevier's examples, some sites are plagued by serial re-uploads of the same copyrighted works hundreds of times. Some form of "notice and stay down" for these works through the use of filtering mechanisms like www.Scribd.com would address this issue. If sites that need technical measures the most "drag their feet" or refuse to consider reasonable technical measures at all -- regardless of the precision of the tools, their cost-effectiveness, or recommendations by peer companies through a standards-setting process -- it may be necessary for Congress or the courts to step in and provide remedies to copyright owners.

One potential means for Congress to do that is through DMCA Section 512(i). Congress could make the adoption of standard technical measures a requirement for DMCA safe harbor protection for certain sites that have substantial serial re-uploading. Like the standard-setting process itself, we think this recommendation is consistent with Congress' intent in 1998 to deny safe harbor protection to sites that refused to accommodate standard technical measures relevant to that era, updated to treat today's non-compliant sites the same way if they refuse to adopt filtering while being overrun by the constant re-uploading of copyrighted works.

Another way for Congress to encourage the adoption of needed technical measures by these sites is to amend DMCA 512(j) to clarify that injunctive relief is available to prevent the reappearance of the same specific works on the sites. If repeated notices and takedowns do not prevent the same infringing works (for example, the 571 reappearances of Elsevier's Genetics book on www.4shared.com) from appearing on a site that refuses simple measures to address the problem, courts should not be handcuffed by the safe harbor from providing any relief whatsoever to the copyright owner.[7]

Sites that Refuse Takedowns and all other Measures

There are sites that simply refuse to comply with takedown notices or any statutory or judicial requirements, many times because they successfully hide their operator's identities and locations or are essentially beyond the reach of reasonable rights holder enforcement capabilities. The large scale infringement on these non-compliant sites cannot be addressed at all through notice and takedown measures, or through voluntary (or even court-ordered) reasonable technical measures. For these non-compliant sites, it is essential that copyright

[7] Cases in Germany against www.rapidshare.com decided under the EU safe harbor (as adopted in Germany) provide a model for this recommendation. In Germany, sites with business models and practices that in effect encourage infringement can be subject to injunctive relief imposing increased obligations to prevent recurring infringements of specific works in suit. After injunctions were imposed in those cases, Rapidshare terminated its "rewards" program and adopted a filter to limit infringements.

owners and the legitimate third-party services used by these non-compliant sites cooperate to address large scale infringements.

Elsevier is encouraged by efforts by certain groups of stakeholders to enter private agreements and to create "best practices" to prevent support for parties and sites engaged in piracy and counterfeiting, including voluntary efforts involving payment processors and advertising services.[8] These agreements and best practices, however, are not currently well suited to efficiently prevent support for large-scale piracy sites.

Elsevier believes that where a US court with jurisdiction over a site finds that the site is non-responsive and liable for copyright infringement for which no DMCA safe harbor is afforded, the court should have authority to enter orders requiring third parties located in the US that provide services to the site to suspend those services.

Improvements to Notice and Takedown and Repeat Infringer Practices

While Elsevier's primary focus is on the increasingly urgent need for technical measures to address large scale infringement and the consequences that should result for the bad faith refusal to adopt such measures or otherwise comply with legal requirements, there clearly is a continued role for the notice and takedown system. Among other purposes, the notice and takedown system will continue to address uploaded materials not appropriate for filtering systems because they do not meet "matching" requirements and for sites with little or no third party uploading or downloading activities that may continue to rely on notices and takedowns.

Elsevier agrees with the recommendations of the Association of American Publishers to improve the notice and takedown system, which were made in its Comments on the Department of Commerce "Green Paper." Those recommendations include efforts to standardize and streamline notices and submission processes to eliminate technically non-compliant notices and to prevent barriers to automated submissions of notices to sites. In addition, we agree with AAP's recommendations on improvements to DMCA repeat infringer requirements and practices, including specifically the need to require sites to properly identify and track the number of repeat infringements by users and to adhere to policies calling for termination of repeat infringers in appropriate circumstances.

Conclusion

Elsevier's experience demonstrates that the volume of necessary takedowns for its copyrighted works is growing, but that its good faith notices are having little, if any, impact on the problem. One contributing factor is the constant re-uploading of the same works to the same sites. Elsevier believes that standard technical measures like filtering could help address the problem and advocates a government-guided, multi-stakeholder, process to establish voluntary measures. Elsevier also advocates that if sites that need such measures the most because of large scale serial re-uploading on their sites unreasonably refuse to adopt such

[8] The International Anti-Counterfeiting Coalition, composed of payment processors and content and product owners, has created a "Payment Processor Portal" to prevent financial support for parties engaged in counterfeiting and piracy. The Interactive Advertising Bureau and ad networks have introduced "Best Practices Guidelines to Address Piracy and Counterfeiting."

measures, it may be necessary for Congress and the courts to create and impose legislative and legal remedies. For sites that currently fail to fulfill the requirements for safe harbor protection, Elsevier would like to see further development and compliance with best practices whereby third parties that support infringing sites would terminate support, and would welcome court-ordered remedies for the same purpose. Finally, Elsevier agrees with recommendations made by AAP to improve existing DMCA notice and takedown processes and repeat infringer policies and practices.

Thank you for allowing Elsevier to submit this written statement and for the opportunity to provide testimony. We look forward to responding to any questions or requests for further information you may have.

Respectfully submitted,

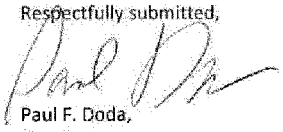

Paul F. Doda,
Elsevier Inc.

Mr. COBLE. Thank you, Mr. Doda.
Ms. Oyama?

TESTIMONY OF KATHERINE OYAMA,
SR. COPYRIGHT POLICY COUNSEL, GOOGLE INC.

Ms. OYAMA. Thank you, Chairman Coble, Ranking Member Nadler, Chairman Goodlatte, Ranking Member Conyers, for inviting me to testify today. It has never been a more exciting time for creativity on the Internet. With the Internet as a global distribution platform, more musicians, filmmakers and artists are creating more content than ever before. And with that in mind, I just want to emphasize two points today.

First, the technology sector has been the engine of U.S. economic growth and job creation. Online services have created new markets and generate billions of dollars for the content industry, and this has only been made possible because of the legal foundation that is provided by the DMCA.

And second, Google's experience shows that the DMCA's notice and takedown system of shared responsibilities strikes the right balance in promoting innovation and protecting creators' rights online.

The DMCA's key principle, that Internet platforms are not held liable for every comment, post or tweet by their users, is an essential feature on which every Internet company today relies. Before the DMCA became law in 1998, companies like Yahoo, Google, eBay, they faced the prospect of crushing statutory damages for providing their services. And today on YouTube, more than 1 million creators are earning revenue from their videos. And in the last several years, Google has sent more than $1 billion to the music industry alone, including new revenue streams for user-generated content. Companies like Netflix who use Spotify and Pandora have transformed the ability of creators to grow new audiences, and this is just the beginning. With more than 5 billion users coming online in the next decade, the market for digital entertainment is expanding rapidly.

The foresight Congress showed in crafting the DMCA has helped enable this economic success. The notice and takedown process creates legal certainty to incentivize venture capital investment and new services, and it protects rights holders. Only copyright owners know what material they own and where they want their works to appear, and when they send takedown notices, online platforms disable access to infringing content in response. This cooperative process allows for innovation and encourages investment, and hugely popular platforms like Facebook, Twitter, Pinterest would not be possible without these.

As for Google, we take our responsibilities under the DMCA very seriously. We have made our takedown process faster and easier for rights holders to use than any other online platform. And despite a dramatic increase in the volume of DMCA takedown notices that we receive, our average turnaround time for removing content from search results has actually decreased to less than 6 hours. And even now, the notices that we receive cover far less than 1 percent of all of the content that we index.

There are, unfortunately, abuses of the system, and we work hard to detect and reject them. Attempts to use the DMCA to censor criticism, attack a business competitor, or gain political advantage are relatively rare but are very important to guard against.

The legal certainty provided by the DMCA has allowed companies like Google to develop innovative systems that generate new revenue for rights holders. For example, YouTube's Content ID system enables rights holders to choose in advance whether they want to track, monetize, or remove user-uploaded videos that match their content. All of the major record labels and movie studios use Content ID, and most of our partners are choosing to monetize their content rather than having it all come down.

We are also devising new ways to highlight legal content in order to make it easier to find. When you Google a TV show like "Game of Thrones," or a film like "12 Years a Slave," we provide a prominent link on the right-hand panel for you to buy that show or movie instantly through services like Amazon and Google Play. If you search for a film playing in theaters, the first result you will likely see is going to include local show times, a link to purchase tickets, and other things like trailers.

We recognize that despite all these steps, piracy remains a serious problem. The most effective way to combat rogue sites is to attack their sources of revenue. For our part, we have expelled over 73,000 rogue sites from our advertising services over the past 2 years, mostly based on our own detection efforts.

In conclusion, I urge the Committee to preserve the current DMCA framework to ensure that the U.S. Internet industry remains at the forefront of the global economy, and we should incorporate DMCA-like safe harbors in our trade agreements to encourage the innovation and growth in other countries that the DMCA has enabled in the United States.

Thank you.

[The prepared statement of Ms. Oyama follows:]

Google

Testimony of Katherine Oyama, Sr. Copyright Policy Counsel, Google Inc.
House Judiciary Subcommittee on Courts, Intellectual Property, and the Internet
Hearing on "Section 512 of Title 17"
March 13, 2014

Chairman Coble, Ranking Member Nadler, and Members of the Subcommittee:

Thank you for the opportunity to testify today regarding Title II of the Digital Millennium Copyright Act of 1998 ("DMCA"), codified in Section 512 of title 17 of the U.S. Code.

The DMCA's 'safe harbors' for online service providers are one of the foundations of the modern Internet, which have allowed for an explosion of creativity and free expression. Today, the Internet enables more than $8 trillion in e-commerce every year.[1] The 'safe harbors' have been crucial not only to Google's many online products and services, but also to those of nearly every other Internet company.

The media landscape has evolved since the DMCA was enacted over 15 years ago. The traditional entertainment industries have begun to harness the power of the Internet to drive revenue for creators and develop new audiences. Digital platforms have quickly become a dominant form of distribution for music, movies, books, and all forms of creative media.

Music is a great example: in 2012, digital music grew to 59% of total industry revenues.[2] Music streaming services, such as Spotify, Pandora, or Google Play Music All Access, are seeing explosive growth around the world. Nielsen and Billboard reported that on-demand audio streams rose 103% in 2013, and they now factor in the popularity of music on YouTube when determining the ranking for songs on their charts.[3]

At the same time, more music, video, text, software, and all kinds of media are being created by more people than ever before. Every kind of creative endeavor, both amateur and professional, is

[1] McKinsey Global Institute, *Internet matters: The Net's sweeping impact on growth, jobs, and prosperity*, at 1 (May 2011), available at <http://goo.gl/aKXZJh>.
[2] Recording Industry Association of America, *Music Industry Continues To Lead the Way in Digital Adoption, With A Bit of Vinyl On The Side* (June 2013), available at <http://goo.gl/eDcMOT>.
[3] Nielsen, *Nielsen & Billboard's 2013 U.S. Music Report* (Jan. 8, 2014), available at <http://goo.gl/O4E2Sx>.

being transformed by the new opportunities and lower costs made possible by digital tools and online distribution. Online platforms are enabling new creators and new voices to connect with a global audience directly, without the traditional middlemen.[4]

Google and YouTube are now major contributors in this new ecosystem. Over the past few years, YouTube has generated over a billion dollars for the music industry alone. There are over a million partners making money from YouTube. And we now have partnerships with every major record label and movie studio to sell or stream music and movies on Google Play. We've made tremendous progress over the past several years and will continue to partner with the entertainment industry and creators of all kinds to bring entertainment and culture to the world.

The DMCA Has Enabled Economic Opportunities

These opportunities for creators are the direct result of the DMCA safe harbors. Congress rightly understood in 1998 that by establishing clearer copyright "rules of the road" for service providers, it could encourage investment in online services, while also providing copyright owners with new enforcement options online. The DMCA therefore established copyright "safe harbors" for four functions at the heart of the internet: providing internet access, providing caching services, hosting content on behalf of users, and linking.[5] In order to qualify for these safe harbors, online service providers are required to meet a number of requirements, including responding expeditiously when notified by copyright owners of infringing materials or activity on their networks.

In order to facilitate cooperation between copyright owners and service providers, Congress established a set of responsibilities to be shared between them. Congress put a notice-and-takedown process at the heart of the safe harbor structure. That process describes in detail what information a copyright owner or its representative must provide to a service provider when sending a takedown notice. In response, a service provider must expeditiously disable access to the infringing activity or material, or else forfeit the safe harbor. Service providers are also obligated, as a condition of the safe harbor, to terminate subscribers who are proven to be repeatedly using the service to infringe. Congress also included a number of safeguards intended to protect Internet users from abusive or unfounded copyright allegations.

The DMCA's shared responsibility approach works. Copyright holders identify infringement and, if they choose, request its removal. Upon notification, online service providers remove or disable access to the infringing material. This approach makes sense, as only copyright holders know what material they own, what they have licensed, and where they want their works to appear

[4] Techdirt, *The Sky is Rising!* (Jan. 2012), available at <http://goo.gl/eDN1n>.
[5] 17 U.S.C. § 512(a)-(d).

online. Service providers cannot by themselves determine whether a given use is infringing. A text, song, image, or video can infringe copyright in the context of one site but be legal on another, through license or in the context of criticism, political speech, or other legally protected use.

And increasingly, copyright owners welcome certain kinds of fan-driven uses, even if formally unauthorized, as an important part of viral marketing and promotional efforts. Accordingly, courts have repeatedly found that the initial responsibility of identifying infringing works online and notifying service providers properly falls on the copyright owner. After being notified, the DMCA shifts the burden to the service provider to disable access to the material promptly.

The careful balance struck by the DMCA safe harbors created the legal infrastructure for the Internet we know today, making possible online platforms like eBay, Amazon, YouTube, Facebook, and Twitter, which in turn have unleashed new sources of creativity, economic development, and jobs. Today, more than 66,000 service providers have registered DMCA copyright agents with the Copyright Office, providing a catalog of the diversity of the online activities protected by the safe harbors.[6] At the same time, the courts have made it clear that the DMCA safe harbors provide no shelter for illegitimate sites seeking to shirk their responsibilities.

Google's Experience with the DMCA Safe Harbors

Google relies on all four of the safe harbors established in Section 512. Google Fiber, which we hope will ultimately deliver gigabit residential broadband access in dozens of cities around the United States, relies on the 512(a) safe harbor for conduit functions necessary to provide internet access to subscribers. Google's Web Cache relies on the 512(b) safe harbor for its caching functions. There are a broad array of Google services that rely on 512(c)'s safe harbor for hosting content on behalf of users, including YouTube, Gmail, Drive, and Google Plus. And, finally, Google Search relies on the 512(d) safe harbor that applies to linking and information location tools generally. None of these services could exist in their current form without the DMCA safe harbors. Courts have repeatedly upheld the applicability of the safe harbors to Google services, recognizing that Google lives up to its obligations as a service provider under the statute.[7]

Google's experience with the DMCA's notice-and-takedown provisions dates back to 2002. In

[6] Comments of the Computer & Communications Industry Association (CCIA), Request for Comments on Department of Commerc Green Paper, Copyright Policy, Creativity, and Innovation in the Digital Economy, Dkt. No. 130927852–3852–01, filed Nov. 13, 2013, at 9, available at <http://goo.gl/S9HAxl>.

[7] *See Viacom Intern. Inc. v. YouTube, Inc.*, 2013 WL 1689071, 107 U.S.P.Q.2d 1157 (S.D.N.Y. 2013); *Perfect 10, Inc. v. Google, Inc.*, No. 04-9484, 2010 U.S. Dist. LEXIS 75071 (C.D. Cal. 2010); *Parker v. Google, Inc.*, 422 F. Supp. 2d 492 (E.D. Pa. 2006); *Field v. Google, Inc.*, 412 F.Supp. 2d 1106 (D. Nev. 2006).

March of that year, we received our first takedown notice for Search, sent by the Church of Scientology, seeking to remove links to documents posted as part of criticism of the church. In the years since, Google has seen the volume of DMCA takedown notices increase dramatically.

For example, in 2010, copyright owners asked us to disable access to approximately 3 million items across all of our products. In 2013, in contrast, we received takedown notices for approximately 230 million items. In other words, today we receive takedown notices for more items *every week* than we received in all of 2010. Despite the rapidly increasing volumes, Google has managed to reduce the average time to process takedown notices, which is a testament to the efforts Google has made to improve and scale its procedures. Today, for example, when we receive a copyright removal request for Search, our average turnaround time is less than 6 hours.

As far as we can ascertain, there are two forces behind the rapid increase in takedown notices. First, over the past 3 years, Google has made substantial investments in making the process more efficient. As the process has become more efficient, copyright owners have been increasingly willing to use it. It has sometimes been a challenge to meet the rising demand, and hundreds of Google employees are involved in the effort. Nevertheless, Google remains committed to making the DMCA process work smoothly, quickly, efficiently, and at no charge for copyright owners.

Second, volumes have increased because copyright owners and enforcement vendors have steadily upgraded their ability to detect copyright infringements online. Over the past three years, we have seen the emergence of a robust, competitive market aimed at providing enforcement services to copyright owners. Today, firms like Marketly, MarkMonitor, and Degban offer their detection services to copyright owners and their industry associations. This has made it cheaper and easier for copyright owners both large and small to send notices to service providers.

The increasing volume of takedown notices demonstrates the continued relevance and effectiveness of the DMCA's notice-and-takedown regime. Copyright owners are using the process ever more intensively, suggesting that they continue to find it valuable. As copyright owners and enforcement vendors continue to deploy new technologies to identify uses of their works online, we expect the cost per notice to continue to drop, and takedown volumes to concomitantly increase. This suggests that the notice-and-takedown aspect of the DMCA safe harbors will continue to be a vital part of the efforts to battle infringement online.

Google has also made extensive efforts to make it easy to submit takedown notices, whether on behalf of a multinational entertainment company or an individual artist. So, for example, Google maintains a public web form in multiple languages where anyone may submit DMCA takedown notices 24 hours a day by answering a simple set of interactive questions. This is supplemented by

"trusted submitter" programs to accommodate the needs of rightsholders and enforcement vendors who use automated means to submit large numbers of notices for products like Search, YouTube, Blogger, and Picasa. And, of course, Google has never charged copyright owners, whether large or small, to submit or process a DMCA takedown notice. As a result of these efforts to make the process easy to use for as many copyright owners as possible, during 2013, Google received DMCA notices from thousands of different submitters, from nearly every country on the globe, in 70 different languages.

Unfortunately, Google also has experience with abuses of the DMCA's notice-and-takedown system. Here are just a few examples:

- A poet sent repeated takedown notices targeting criticism and commentary relating to the poet's online copyright enforcement efforts.
- A physician claiming a copyright in his signature sent a takedown notice aimed at a document related to the suspension of his license to practice medicine.
- Major broadcast news networks sent takedown notices targeting videos from the McCain-Palin campaign that included brief excerpts from news footage, just weeks before the 2008 presidential election.
- A major soft drink company sent a takedown notice targeting a YouTube news channel for including excerpts from a commercial in its critical coverage of that commercial.

These are only a sample of the troubling takedown notices that Google receives, often repeatedly from the same vexatious submitters.

In enacting the DMCA safe harbors, Congress included provisions intended to deter abuse, including a "counternotice" process whereby a user could contest a takedown directed at his or her content and an affirmative cause of action against those who include misrepresentations in their notices. While those provisions are valuable, they have not proven sufficient to deter those who try to use DMCA notices, not to protect copyright interests, but instead as a pretext for censorship or to interfere with legitimate competitors.

As the volume of removal notices continues to rise, detecting inaccurate or abusive notices continues to pose a challenge. Google invests continuously in engineering and machine learning solutions to address this challenge. Our inclusion of data regarding the DMCA notices we receive in our Transparency Report has also proven useful in detecting abusive notices, enabling journalists, webmasters, and other interested members of the public to identify and respond to unfounded takedowns.

Beyond the DMCA Safe Harbors

While the DMCA safe harbors have proven themselves to be effective and valuable for service providers and copyright owners alike, they are not, by themselves, a complete solution to the problem of copyright infringement online. Piracy has been a challenge online, and Google takes that challenge seriously. Accordingly, Google has invested in many measures that go beyond the requirements of the DMCA.

For example, Google has invested more than $60 million to date on the development of Content ID on YouTube. With this system, rightsholders are able to identify user-uploaded videos that are entirely or partially their content, and choose, in advance, what they want to happen when those videos are found.

This is how it works: Rightsholders deliver to YouTube reference files (audio-only or video) of content they own, metadata describing that content, and policies describing what they want YouTube to do when it finds a match. YouTube compares videos uploaded to the site against those reference files. Our technology automatically identifies the content and applies the rightsholder's preferred policy: track, monetize, or block. Copyright owners have "claimed" more than 200 million videos on YouTube with the help of Content ID.

Thanks to the options that Content ID affords to copyright owners, it's not just an anti-piracy solution, but also a new business model for copyright owners and YouTube alike. The vast majority of the more than 4,000 partners using Content ID choose to monetize their claims, rather than block their content from appearing. Content ID is good for users as well. When copyright owners choose to monetize or track user-submitted videos, it allows users to remix and upload a wide variety of new creations using existing works.

While Google is proud to have developed and deployed Content ID, it is important to note that Content ID is not a one-size-fits-all solution for every sort of service or all kinds of service providers. So, for example, YouTube could never have launched as a small start-up in 2005 if it had been required by law to first build a system like Content ID. Nor does such a system work for a service provider that offers information location tools (like search engines and social networks) but does not possess copies of all the audio and video files that it links to. And, of course, Content ID is not perfect, sometimes mistakenly ascribing ownership to the wrong content and sometimes failing to detect a match in a video.

The DMCA safe harbors have succeeded precisely because they do not attempt to impose detailed technology mandates on the rapidly evolving world of online technologies and service providers. Instead, they provide a floor of legal certainty for service providers large and small, upon which content owners and service providers can build further voluntary measures.

For Search, Google is proud that, for the vast majority of media-related queries typed by users each day, our search results point to authorized content. This is a significant achievement considering that we receive more than a billion queries each day, in dozens of languages, and 15% of those queries have never been searched on Google before.

This nevertheless leaves the tiny proportion of infrequently typed queries where there is still more work to be done. As described above, the DMCA's notice-and-takedown procedure is one important element in the effort to address these remaining results. It is only with the help of copyright owners that we can identify which results are infringing and remove them.

In addition to removing pages from search results when notified by copyright owners, Google also factors in the number of valid copyright removal notices we receive for any given site as one signal among the hundreds that we take into account when ranking search results. As a result, sites with a relatively high number of valid removal notices may appear lower in search results. Google is the only search engine that has implemented such a demotion signal in its ranking algorithm, and we believe that this ranking change should help users find legitimate, quality sources of content more easily.

Our experience with the demotion signal, however, has taught us that it will only succeed if there are better, legitimate results to show above those that have been demoted. There is work to be done on this score, and we have been actively engaged with the motion picture and music industries to explore how we can encourage legitimate sites to take the necessary "search engine optimization" (SEO) steps to that will allow those sites to appear in search results above unauthorized sources. We look forward to continuing our work, in collaboration with other stakeholders, to further evolve and enhance the demotion signal.

We also believe that there are more effective ways to strike at the root causes of piracy online, in hopes of getting ahead of the whack-a-mole problem.

The best way to battle piracy is with better, more convenient, legitimate alternatives to piracy, as services ranging from Netflix to Spotify to iTunes have demonstrated. The right combination of price, convenience, and inventory will do far more to reduce piracy than enforcement can.

The music industry has demonstrated the effectiveness of this approach by licensing a variety of music services including free, advertising-supported streaming services (like Spotify and Pandora), download stores (like iTunes), and on-demand subscription products (like Google Play Music All Access). A survey recently released by the Swedish music industry shows that since 2009, the number of people who download music illegally in Sweden decreased by more than 25

percent after the introduction of new legal services such as Spotify.[8] Similar trends were seen in a 2013 survey from NPD Group.[9] And a recent study conducted by Spotify found that overall piracy rates in the Netherlands have declined dramatically, while the popularity of legitimate digital music services has greatly increased.[10]

Film and television have had success combating piracy with legitimate alternatives, as well. A recent study by Carnegie Mellon University researchers found that ABC's decision to add its television content to Hulu.com led to a nearly 20% drop in piracy for that media.[11] In a recent interview with Stuff magazine, Netflix's Chief Content Officer Ted Sarandos said that when Netflix launches in a new country, piracy rates in that country drop. In his opinion, the best way to reduce piracy is by "giving good options."[12] We were also excited to learn recently that Warner Bros. intends, for the first time, to release one of its major films simultaneously in theaters and online.[13] The best strategy for reducing the demand for unauthorized versions of movie content still in theaters is to provide consumers with authorized online movies for rent or purchase.

Google is not just waiting for others to do the work. Across our product line, we are also heavily invested in bringing new, authorized sources of content to consumers. Whether it is music videos and video rentals on YouTube, movie and TV downloads on the Google Play store, or unlimited on-demand streaming music on Google Play Music All Access, Google is racing to be part of the mix of compelling services that are luring consumers away from unauthorized alternatives.

Until these compelling legitimate alternatives have fully displaced pirate sites, however, there is more that needs to be done. We have long said that the most effective way to combat rogue sites that specialize in online piracy is to attack their sources of revenue. These sites are almost exclusively for-profit enterprises, and so long as there is money to be made by their operators, other anti-piracy strategies will be far less effective.

As a global leader in online advertising, Google is committed to rooting out and ejecting rogue sites from our advertising services. Google continues its efforts, both proactive and reactive, to detect and act against advertisers and web publishers who violate our policies against copyright infringement. Since 2012, we have ejected more than 73,000 sites from our AdSense program, the vast majority of those caught by our own proactive screens.

---

[8] Mediavision, *Music Sweden File Sharing & Downloading* (2011), available at <http://goo.gl/XTUVH>; Digital Trends, *Spotify Linked to Major Decline in Piracy* (September 29, 2011), available at <http://goo.gl/U7E9hy>.
[9] NPD Group, *Music File Sharing Declined Significantly in 2012* (Feb. 26, 2012), available at <http://goo.gl/apJVc>.
[10] Spotify, *Adventures in the Netherlands: Spotify, Piracy and the new Dutch experience* (July 17, 2013), available at <http://goo.gl/ImsYbB>.
[11] Brett Danaher et al., *Understanding Media Markets in the Digital Age: Economics and Methodology* (2013) <http://goo.gl/6ItxZW>.
[12] Luke Edwards, *Netflix's Ted Sarandos talks Arrested Development, 4K, and reviving old shows*, Stuff (May 1, 2013), available at <http://goo.gl/Q1rJg>.
[13] Ben Fritz, '*Veronica Mars' to Break the Mold for Movie Releases*, Wall Street Journal (Feb 21, 2014), available at <http://goo.gl/JB7pU5>.

In April 2011, Google was among the first companies to certify compliance in the Interactive Advertising Bureau's (IAB's) Quality Assurance Certification program, through which participating advertising companies will take steps to enhance buyer control over the placement and context of advertising and build brand safety. This program will help ensure that advertisers and their agents are able to control where their ads appear across the web.

In July 2013, Google worked with the White House's Office of the U.S. Intellectual Property Enforcement Coordinator (IPEC) and other leading ad networks to participate in Best Practices and Guidelines for Ad Networks to Address Piracy and Counterfeiting. Under these best practices, ad networks will maintain and post policies prohibiting websites that are principally dedicated to engaging in copyright piracy from participating in the ad network's advertising programs. By working across the industry, these best practices should help reduce the financial incentives for pirate sites by cutting off their revenue supply while maintaining a healthy Internet and promoting innovation.

Conclusion

The DMCA safe harbors are now more than 15 years old. While they are not perfect, they have proven to be a remarkable success at their stated aim — to encourage investment in internet technologies by reducing the uncertainties created by copyright law, while also giving copyright owners new tools to address infringement online.

There is also a new context. The entertainment and culture industries have begun to adapt to the digital environment and are partnering with technology companies to sell and distribute their media. Services like YouTube, iTunes, Netflix, Google Play, Amazon, Hulu, and hundreds other are making content available legally online. This would not have been possible if Internet platforms, the very companies helping drive digital revenue to the creative industries, had faced existential threats from copyright litigation.

In short, the balance struck by the DMCA is working: the legitimate online platforms made possible by the DMCA safe harbors are today driving billions of new dollars to the entertainment industries every year. There is every reason to think that this virtuous cycle will only be reinforced as today's fledgling internet startups become tomorrow's global online platforms.

Google, like many other service providers, has built additional voluntary measures to combat piracy on top of the requirements set down by the DMCA safe harbors. This combination of "rules of the road" and evolving voluntary initiatives has proven itself to be an engine of economic growth and technology innovation for more than 15 years, while simultaneously

affording rightsholders new ways to combat infringement online.

Today, we have an opportunity to build on the model that has allowed the U.S. digital economy to flourish. As Congress considers trade treaties and other agreements with countries across the world, it should advocate for provisions reflecting the safe harbors that have become a pillar of U.S. law. Continued commitment to the principles set out in the DMCA provisions are a key part of keeping the American internet industry at the forefront of the global economy in the 21st century.

Thank you for your attention and the opportunity to contribute our views.

Mr. COBLE. Thank you, Ms. Oyama.

Ms. Schneider?

TESTIMONY OF MARIA SCHNEIDER, GRAMMY AWARD WINNING COMPOSER/CONDUCTOR/PRODUCER, MEMBER OF THE BOARD OF GOVERNORS, NEW YORK CHAPTER OF THE RECORDING ACADEMY

Ms. SCHNEIDER. Chairman Goodlatte, Chairman Coble, Ranking Members Conyers and Nadler, and Members of the Subcommittee, my name is Maria Schneider. I am a composer, bandleader, and conductor based in New York City, a three-time Grammy-winner in the jazz and classical genres, and a board member of the Recording Academy's New York Chapter. The Recording Academy is the trade association representing individual music creators. I am deeply honored to speak with you this morning about my personal experiences with the notice and takedown provisions of the DMCA.

I come here as an independent musician in the prime of my career, grateful for a steadily growing fan base and critical acclaim. But my livelihood is threatened by illegal distribution of my work, and I cannot rein it in.

The DMCA creates an upside-down world in which people can illegally upload my music in a matter of seconds, but I must spend countless hours trying to take it down, mostly unsuccessfully.

It as a world where the burden is not on those breaking the law, but on those trying to enforce their rights. It is a world with no consequences for big data businesses that profit from unauthorized content, but with real-world financial harm for creators.

Like most artists, I love technology. I became a pioneer in online distribution when my release "Concert In the Garden" became the first Internet-only album to win a Grammy, and it also heralded the age of fan funding.

Yet today, I struggle against an endless number of Internet sites offering my music illegally. After I released my most recent album, I found it available on numerous file-sharing sites. I am an independent artist, and I put $200,000 of my own savings on the line and years of work for this release, so you can imagine my devastation.

Taking my music down from these sites is a frustrating and depressing process. The DMCA makes it my responsibility to police the entire Internet on a daily basis. As fast as I take my music down, it reappears again on the same site, like an endless whack-a-mole game.

The system is in desperate need of a fix, and I would like to propose three commonsense solutions.

First, creators of content should be able to prevent unauthorized uploading before infringement occurs. We know it is technologically possible for companies to block unauthorized works, as YouTube already does this through its Content ID program. But every artist should be entitled to this service, to register their music once and for all. Just like the successful "do not call" list, creators should be able to say "do not upload." If filtering technology can be used to monetize content, it can also be used to protect it.

Second, the takedown procedure should be more balanced. Most of my fans who upload my music probably have no intention of

harming me. But to upload my music, one simply has to click a box. On the other end of the transaction, I must jump through a series of hoops, preparing a notice for each site, certifying documents under penalty of perjury, and spending hours learning the sites' unique rules for serving the notice. Creators should have a more streamlined, consistent process to take content down.

Internet services should be required to put consumers through a series of educational steps to help them understand what content can be lawfully uploaded. If consumers had to go through a more robust process to upload others' content, the system would be more efficient for everyone.

Third, takedown should mean stay-down. Once a service has been notified of an infringement, there is simply no excuse for the same work to show up again and again on the same site.

Mr. Chairman, my fellow creators and I have an important job. We create art, the fabric of life for our citizens. It is our greatest ambassador to the world. Our Founding Fathers gave authors the right to copy and distribute their own work in order to incentivize creation. It is such a powerful concept that it is in our Constitution.

But I must tell you that the current environment does not fulfill that constitutional mandate. The majority of my time is now spent simply trying to protect my work online. Only a small fraction of my time is now available for the creation of music. So instead of the Copyright Act providing an incentive to create, it provides a disincentive. The simple changes I have outlined would make great strides in fixing a broken system.

Mr. Chairman, our Founding Fathers showed great wisdom in seeking to protect creators. I have hope that you and your colleagues will also show great wisdom in ensuring that this protection will soon apply to the digital age.

Thank you.

[The prepared statement of Ms. Schneider follows:]

Statement of

Maria Schneider

GRAMMY-Winning Composer/Conductor/Producer
Member of the Board of Governors,
New York Chapter of The Recording Academy

Before the
U.S. House of Representatives
Committee on the Judiciary
Subcommittee on Courts, Intellectual Property and the Internet

Hearing on
"Section 512 of Title 17"

March 13, 2014

Chairman Goodlatte, Chairman Coble, Ranking Members Conyers and Nadler, and Members of the Subcommittee. My name is Maria Schneider. I'm a composer, bandleader, and conductor based in New York, a three-time GRAMMY-winner in the jazz and classical genres, and a board member of the Recording Academy's New York Chapter. The Recording Academy is the trade association representing individual music creators. I'm very honored to speak with you this morning about my personal experiences with the notice and takedown provisions of the Digital Millennium Copyright Act, or the DMCA.

I come here as an independent musician in the prime of my career, grateful for a steadily growing fan base and critical acclaim. But my livelihood is being threatened by illegal distribution of my work that I cannot rein in.

The DMCA creates an upside down world in which people can illegally upload my music in a matter of seconds. But I, on the other hand, must spend countless hours trying to take it down, mostly unsuccessfully.

It's a world where the burden is not on those *breaking* the law, but on those trying to *enforce* their rights.

It's a world with no consequences for big data businesses that profit handsomely from unauthorized content, but with real-world financial harm for me and my fellow creators.

Like most artists, I love technology. I became a pioneer in online distribution when my release *Concert In the Garden* became the first Internet-only album to win a GRAMMY, and it also heralded the age of fan funding.

But I'm now struggling against endless Internet sites offering my music illegally. After I released my most recent album, *Winter Morning Walks*, I soon found it on numerous file sharing websites. Please understand, I'm an independent artist, and I put $200,000 of my own savings on the line and years of work for this release, so you can imagine my devastation.

Taking my music down from these sites is a frustrating and depressing process. The DMCA makes it my responsibility to police the entire Internet on a daily basis. As fast as I take my music down, it reappears again on the same site–an endless whac-a-mole game.

The system is in desperate need of a fix, and I would like to propose three common-sense solutions:

First: Creators of content should be able to prevent unauthorized uploading *before* infringement occurs. We know it's technically possible for companies to block unauthorized works, as YouTube already does this through its Content ID program. But *every* artist should be entitled to this service, to register their music once and for all, with no strings attached. Just like the successful "do not call" list, creators of content should

be able to say, "do not upload." If filtering technology can be used to *monetize* content, it can also be used to *protect* it.

Second: The takedown procedure should be more balanced. I am certain that most of my fans who upload my music have no intention of harming me – and probably no knowledge that they are doing so. But to upload my music on most sites, one simply has to click a box saying they acknowledge the rules. On the other end of the transaction, I, the harmed party, must jump through a series of hoops, preparing a notice for each site, certifying documents under penalty of perjury, and spending hours learning the sites' unique rules for serving the notice. Owners should have a more streamlined and consistent process to take content down.

But balance means Internet services have a responsibility too. They should better educate consumers who upload content, more clearly informing them that it is a violation of law to upload content they do not own. If consumers had to go through a more robust process to upload others' content, the system would be more balanced and fair.

Third: Take-down should mean "stay-down." Once a service has been notified of an infringing work, there is simply no excuse for the same work to show up again on the same site.

Mr. Chairman, my fellow creators and I have an important job – we create art that becomes the fabric of life for our own citizens and for people the world over. American music has become the world's music. Our founders had the foresight to give us the exclusive rights to our works in order to "promote the progress of science and useful arts." Authors were given the right to copy and distribute their own work in order to incentivize creation.

But I must tell you that the current environment does not fulfill that constitutional mandate. The *majority* of my time is now spent on activities that allow me some chance of protecting my work online. Only a fraction of my time is now available for the creation of music. So instead of the Copyright Act providing an *incentive* to create, it provides a *disincentive*. The simple changes I have outlined would make great strides in fixing this broken system.

Mr. Chairman, our founders showed great wisdom in seeking to protect creators. I have hope and confidence that you and your colleagues will also show great wisdom in ensuring this protection will continue in the digital age.

Thank you.

Mr. COBLE. Thank you, Ms. Schneider.
Mr. Sieminski?

TESTIMONY OF PAUL SIEMINSKI, GENERAL COUNSEL, AUTOMATTIC INC.

Mr. SIEMINSKI. Thank you, Mr. Chairman, Members of the Committee. I am General Counsel of Automattic and appreciate the opportunity to testify to you today about our experiences with the DMCA notice and takedown process. In particular, I would like to talk about ways that we have seen the DMCA process misused and how this misuse can harm companies like us, our users, and especially freedom of expression on the Internet.

Automattic is a small company that has a big impact on the Internet. We operate the popular WordPress.com publishing platform where anyone can create and publish a website for free in minutes. WordPress powers some of the largest media properties in the world, as well as millions of small business websites, law firm homepages, and family blogs that are used to share updates with friends and family. We host more than 48 million websites that receive over 13 billion page views a month, and we reach this huge audience with only 232 employees and one lawyer. That is me.

The DMCA's safe harbor provisions provide important legal protections to us as a small and growing company, and its systems work reasonably well overall. However, we have recently seen a troubling rise in the misuse of the DMCA takedown process.

The most egregious cases we have seen are notices from those who fraudulently misrepresent that they own a copyright at all in order to strike content from the Internet that they simply don't agree with. Other examples include DMCA notices sent by companies to remove articles that are critical of their products or copyright holders who send overly broad blanket DMCA notices to take down content even though it is being legally and fairly used.

At Automattic, we do our best to review and weed out abusive DMCA notices, and given our limited manpower, these efforts, on top of the time we spend processing our volume of legitimate notices, take resources away from other important pieces of our business. More importantly, DMCA abuse suppresses legitimate free expression and erodes trust in our system of copyright enforcement overall.

We certainly appreciate the frustrations that rights holders voice about the DMCA system. Piracy is a real issue on the Internet, but we see abuses by those who submit takedown notices as well.

The DMCA gives copyright holders a powerful and very easy-to-use weapon, the unilateral right to issue a takedown notice that a website operator like us must honor or risk legal liability. Under the DMCA safe harbors, the safe thing for an Internet service provider to do is to comply with the notices it receives with no questions asked. Unfortunately, this puts the full burden of defending content on users of Internet platforms who themselves are often small, independent artists, musicians, and amateur publishers. Very often, these individuals don't have the resources or the sophistication to fight back.

To make matters worse, unlike the large statutory damages that exist for copyright infringement, there are no real deterrents under

the law for misusing the DMCA. So most instances of abuse result in successful takedown of targeted content and on repercussions to the abuser.

The only counter-measure available is an action for misrepresentation under Section 512(f) of the DMCA. We recently joined with some of our users who were victimized by abuses in filing two such lawsuits. These suits were expensive to bring, time-consuming to prosecute, and we expect very little compensation in return. Still, they are the only resource available under the current statute, and the only deterrent that we saw to prevent future abuse.

In closing, the DMCA has succeeded in its goal of fostering a vibrant social Internet on a scale that no one could have imagined. Today you can create a Facebook page, Twitter account, or your very own WordPress website for free. These innovative tools allow anyone to publish a cooking blog, build a business as an independent publisher, or even organize a democratic, grassroots overthrow of an oppressive regime in the Middle East.

The Internet's communication and sharing tools are used by literally billions of people, and all of them grew up under the DMCA. For the most part, the statute has worked to encourage the growth of innovative platforms and businesses like ours, but we should be mindful of the ways that the law doesn't work for everyone and can be abused to suppress the freedom of expression that it has been so successful in fostering.

Automattic is very focused on trying to correct the issues we see in our own corner of the Internet, and I would urge the Committee to keep companies like us and our community of creators in mind as we think about the laws governing copyright on the modern Internet.

I thank you again for the opportunity to talk to you today and I look forward to your questions.

[The prepared statement of Mr. Sieminski follows:]

House of Representatives
Committee on the Judiciary
Subcommittee on Courts, Intellectual Property, and the Internet

Section 512 of Title 17

Testimony of Paul Sieminski
General Counsel
Automattic Inc.

MARCH 13, 2014

Mr. Chairman and members of the Committee, I am General Counsel of Automattic and I appreciate the opportunity to speak with you today about our experience with the notice and takedown provisions of the DMCA. From our point of view, the DMCA process works well overall, but we have also seen first hand how some shortcomings of the current system burden important rights of free expression online and create real costs for companies like Automattic.

About Automattic

Automattic is a small company that has a big impact on the internet. We're best known as the company behind WordPress, the most popular and fastest growing publishing platform on the internet. Our WordPress.com service allows anyone to create a website, for free, in minutes. It has proved very popular: Automattic now hosts more than 48 million websites on WordPress.com, which range from some of the largest media properties in the world to small personal and family blogs. Our sites attract approximately 400 million visitors and 13.1 billion page views each month. Automattic is able to reach this huge audience with only 231 employees (including only one lawyer), all of whom work in a distributed environment: Automattic employees live in more than 25 US states and almost 30 countries around the world. We work, collaborate and socialize in on online "office" that's busy 24 hours a day.

Automattic and the DMCA

Our users publish a massive amount of content to the websites on our network. The vast, vast, majority of this content is original work and not subject to any copyright infringement claims. Let me illustrate with some recent data. Last month (February 2014) WordPress.com users created more than 740,000 new websites, made almost 39 million posts to their blogs and webistes, and uploaded more than 22 million individual files (which include photos, videos, songs) in the process[1]. In that same month, we received 825 individual DMCA takedown notices - or about one DMCA notice for every 46,000 posts made to a WordPress website.

Though we don't see large scale copyright infringement on our platform, we fully appreciate and support the rights of copyright creators online. We're especially attuned to the rights of small, independent creators who make up the bulk of our user base and create troves of their own, original copyrighted content on WordPress.com everyday. As such, we devote a considerable amount of resources to addressing the copyright infringement claims that we do receive, and take great care to comply with our obligations under the DMCA's notice and takedown system.

From our perspective, the DMCA's notice and takedown system generally works in practice. The safe harbor provisions of the law are very important to us, and we, like hundreds of other internet service providers, rely on them in publishing the huge amount of online content that our users create. The DMCA provides important certainty that our hosting of user generated content will not lead to costly and crippling copyright infringement lawsuits.

To comply with our notice and takedown obligations, we have a team of seven people who focus on DMCA and copyright issues as part of their jobs. We aim to respond to all inbound DMCA requests within 48 hours, be fully transparent with all parties about the actions we're taking, and make the process of submitting DMCA notices and counter notices as simple and straightforward as possible.

[1] Further statistics on the usage of the WordPress publishing platform may be found at http://wordpress.com/stats

Having one in house lawyer (me) and this small team to address copyright issues puts us miles ahead of the majority of internet startups who are much smaller than Automattic, but who are also subject to the same DMCA regulations. I'd like to stress that a portion of the resources we put towards our DMCA program are aimed at combating the shortcomings of the notice and takedown system. For example, we spend significant effort reviewing and trying to weed out overbroad and abusive DMCA takedown notices, so that our users' speech isn't needlessly censored. This is a real cost to us, and diverts resources from more productive uses, like improving the products and services we offer our customers.

Though the system generally works in practice, we see, first hand, several shortcomings with the DMCA's copyright enforcement system.

In particular, the DMCA doesn't adequately protect important fair uses of content online and doesn't provide a level playing field for individuals who want to counter takedown notices they receive against their content. Importantly, the system fails to penalize abusive and fraudulent DMCA takedown requests. I can attest to how these flaws in the DMCA system place real burdens on us as an internet service provider, and more importantly, on the free expression rights of the many individuals who trust our services to help them run businesses, publish journalism or express their voices to the world.

DMCA Abuse

At Automattic, we've seen an increasing amount of abuse of the DMCA's takedown process. The DMCA's takedown process provides what can be an easy avenue for censorship: simply send in a DMCA notice claiming copyrights in a piece of content that you don't agree with. Regardless of whether you own the copyright, the service provider that hosts the content must take it down or risk being out of compliance with the DMCA.

Recent cases of abuse have been well documented. For example, we recently filed an amicus brief in support of Stephanie Lenz's lawsuit against Universal Music Group[2]. In that case, Ms. Lenz posted a home video of her young child dancing in their family kitchen to a song by the artist Prince. Soon after posting, Universal Music (Prince's record label) sent a DMCA takedown notice to remove the video, claiming it infringed on their copyright in the music playing in the background.

In our amicus brief, we, along with the internet companies who joined us, outlined many other recent examples of misuse of the DMCA that we've seen on our respective platforms. For example:

- A medical transcription training service using forged customer testimonials on their website submitted a takedown for screenshots of the fake testimonials in a blog post exposing the scam.

- A physician demanded removal of newspaper excerpts posted to a blog critical of the physician, by submitting a DMCA notice in which he falsely claimed to be a representative of the newspaper.

- A model involved in a contract dispute with a photographer submitted a series of DMCA notices seeking removal of images of the model for which the photographer was the rights holder.

- An international corporation submitted DMCA notices seeking removal of images of company

[2] Full text of our amicus brief available at https://www.eff.org/files/2013/12/13/osp_lenz_amicus_brief.pdf

documents posted by a whistleblower.

- A frequent submitter of DMCA notices submitted a DMCA notice seeking removal of a screenshot of an online discussion criticizing him for submitting overreaching DMCA notices.

But it was two recent cases of on WordPress.com that really opened our eyes to the issue of abuse.

First: Ivan Oransky and Adam Marcus are experienced science journalists who operate Retraction Watch (retractionwatch.com), a WordPress.com site that highlights and tracks situations where published scientific papers may not be everything they seem. One reader apparently disagreed with a critique published on Retraction Watch - so he copied portions of the Retraction Watch site, claimed the work as his own (by backdating his site to make it appear to be the original publisher) and issued a DMCA takedown notice against the true authors. Relying on the representations of copyright ownership in the DMCA notice, we processed the notice and disabled Retraction Watch's original content. Retraction Watch promptly filed a counter notice, but their content stayed down for a period of 10 days: the time period mandated by the DMCA, even after the legitimate publisher submits a valid counter notice.

Second: Oliver Hotham is a student journalist living in the UK. Oliver publishes investigative articles on his WordPress.com blog (oliverhotham.wordpress.com). The subject of one of his articles apparently had second thoughts about a press statement he gave to Oliver - so he turned to copyright law to censor Oliver's site. He submitted a DMCA notice to Automattic claiming copyrights in the press statement that he issued. We processed the DMCA notice and Oliver's post was removed. Oliver did not feel comfortable submitting to the jurisdiction of a US court and so the post remains disabled today.

These abuses inspired us to join with our users to take action. In November, 2013, Automattic, along with Oliver, Ivan, and Adam filed two lawsuits for damages under Section 512(f) of the DMCA, which allows for suits against those who "knowingly materially misrepresent" a case of copyright infringement[3].

While there are statutory damages for copyright infringement (even if very minor) there are no similar damages, or clear penalties of any kind, for submitting a fraudulent DMCA notice. The lawsuits that we filed represent the only recourse for abuse of the DMCA takedown process. The lawsuits were expensive to bring, time consuming to prosecute, and promise very little in the way of compensation in return. We brought these lawsuits, alongside our users, to protect their important free speech rights and send the message that abuse of the DMCA process has consequences (at least on WordPress.com). Cases like these are extremely rare, and I'm confident in saying that the users would not have the time, resources or sophistication to bring the suits on their own.

The DMCA system gives copyright holders a powerful and easy-to-use weapon: the unilateral right to issue a takedown notice that a website operator (like Automattic) must honor or risk legal liability. The system works so long as copyright owners use this power in good faith. But too often they don't, and there should be clear legal consequences for those who choose to abuse the system. I'd urge the

[3] *Automattic Inc., et al v. Steiner, No. 13-cv-5413 (N.D. Cal. Nov.21, 2013)*, and *Automattic Inc., et al v. Chatwal, No. 13-cv-5411 (N.D. Cal. filed Nov.21, 2013).*

Committee to add such penalties to the DMCA to deter and punish these types of abuses.

Fair Use

Another shortcoming we see in the current takedown regime is an inadequate protection for fair use of copyrighted materials.

The fair use doctrine allows for limited use of another's copyrighted works and underlies a significant amount of the content that's posted to WordPress.com, and across today's social internet. Anytime a blogger uses a portion of a copyrighted book in a book review, or incorporates a screenshot of a company's website in a criticism of that company's products, fair use is at play. This happens thousands of time across the internet and on WordPress.com each day. Fair use is fundamental to the sharing we see on WordPress.com and across the modern, social internet. Anyone has the ability to be a creator and creation on the internet often starts with fair use of another copyrighted work. Without fair use, sharing, creativity and conversation on the internet would be much less interesting and robust.

Unfortunately, fair uses are often the target of DMCA takedown notices. Many times, fair uses are unintentionally targeted by copyright holders (or their third party agents) who simply scan the internet for copyrighted images or text, and issue bulk takedown notices against files that match their database of materials, without regard to how those materials are used. Without adequate, human reviews, to determine if a copyrighted file is being legitimately and fairly used, such bulk notices can create significant collateral damage to freedom of expression. Even more concerning are companies who issue DMCA notices specifically against content that makes use of their copyrighted material as part of a criticism or negative review - which is classic fair use.

The damage done by takedown notices that target fair use is exacerbated by the fact that the counter notice system doesn't work for most internet users (more on that issue below). The end result is that there isn't an effective way, under the current system, for a user on the receiving end of a faulty notice to challenge the removal of their content and have it reinstated.

The DMCA's notice and takedown system should do a better job of taking account of fair use rights. There should be real requirements for copyright holders to consider fair use and meaningful penalties for those who abuse the DMCA takedown process by targeting fair uses of their works.

Counter Notices

To fight back against the faulty, overbroad, or fraudulent DMCA notices I described above, the DMCA provides that a user may challenge the removal of content by filing a counter notice. In our experience, however, this happens very rarely. In February 2014, we received 825 DMCA notices and only 4 counter notices. Other online services report similar statistics.[4]

One key deterrent to contesting a takedown notice is the prospect of statutory damages for infringement. Statutory damages mean that plaintiffs in copyright cases don't have to present any

[4] Twitter, for example, reported receiving more than 5,500 takedown notices over a six month period from January-June 2013. But in that time, it received only six counter notices challenging removal of content. https://transparency.twitter.com/copyright-notices/2013/jan-jun

evidence that they were harmed in order to receive a damages award. This makes damages for infringement highly unpredictable, and in many cases, far out of proportion to the damages caused by an innocent, non-commercial infringement of copyright. Statutory damages represent a deterrent to creativity on the internet, and prevent many internet users from contesting takedown notices against copyrighted content that they had every right to use and publish.

Another deterrent is that the counter notice form itself is complicated and legalistic - many users need to consult a lawyer before completing and submitting the form, and most don't have the time or resources to do that.

Additionally, in the process of submitting a counter notice, users are required to reveal their personal identity and address and agree to be sued in federal court. This doesn't work for the many anonymous bloggers that we host on WordPress.com, who speak out on sensitive issues like corporate or government corruption.

All these factors make filing a counter notice an uphill and potentially very expensive battle. The unfortunate result of this takedown notice power differential is that a massive amount of content is being permanently removed from the internet, even though much of it is lawfully and fairly used.

To address these issues, we should re-examine statutory damages in light of how copyrighted content is being used and shared by individual users on today's internet. Also, the counter notice process can be streamlined and improved.

Conclusion

When the DMCA originally passed In 1998, it wasn't possible to create a Facebook page, Twitter account or your own website, for free, in minutes like you can do on WordPress.com. These innovative tools allow anyone to communicate their vacation photos to the world, build a business as an independent publisher, or even organize a democratic, grass roots overthrow of an oppressive regime in the Middle East. The internet's communication and sharing tools are used by millions of people, and all grew up under the DMCA. For the most part, the statute has worked to encourage the growth of innovative platforms and businesses. The United States is now home to the most thriving and advanced internet companies in the world.

At the same time, there are some important flaws in the DMCA takedown process. Particularly, the DMCA doesn't adequately protect fair use rights that are a key driver of the growth of the modern social internet. Also, the DMCA doesn't provide average internet users or service providers adequate protections against abuse of the notice and takedown system - though copyright law does impose draconian statutory damages for even minor infringements.

From the point of view of the service provider, the safe thing to do is to process all DMCA takedown notices that we receive, without reviewing them for abuse or thinking about the possibility of fair use defenses. The DMCA provides an attractive legal safe harbor for service providers if we follow the takedown process to the letter. Unfortunately, this process puts the full onus on the user to assert their legal rights to content and very often, they choose not to do so because of the risks and expense involved. At Automattic, we do our best to review the takedown notices we receive and in some cases, question and push back on takedown demands that we see as outright abuse or clearly targeting a fair use of copyrighted content. The problem is that each time we question a DMCA notice, or delay our

processing of it to investigate further, we risk stepping outside of the DMCA's safe harbors and subjecting ourselves to a possible infringement claim.

In short, the copyright problem we see on WordPress.com isn't that too little copyrighted content is being removed from the internet. Instead, the huge amount of legitimate, user generated, original content we see on our platform has led to instances of overbroad copyright enforcement, as well as outright abuse of the DMCA. These flaws and abuses have the effect of limiting freedom of expression and we should all do our best to try to correct and prevent them.

Our users are small, indepenet creators, amatuer journalitsts and publishers of all types. A large and growing number of them are located outside of the United States. Many of these individuals do not enjoy freedom of expression in their home countries, but they're able to find it on WordPress.com and on hundreds of other US based services on the internet - all of which are subject to the provisions of the DMCA. We're very proud of the platform that we've created, and of the creators who are able to express their voice through our services. I'd urge the Committee to keep Automattic and our community of creators in mind as we think about the laws governing copyright on the modern internet.

Thank you again to the Committee for the opportunity to share my views on these important issues and I look forward to your questions.

* * * * * * * * * * * * *

Paul Sieminski is General Counsel for Automattic Inc., the company behind WordPress.com. As General Counsel, Paul oversees Automattic's global legal affairs, including copyright and intellectual property enforcement and policy. Paul received his B.S. in Business Administration from Georgetown University and law degree from the University of Virginia School of Law.

Mr. COBLE. I thank all of the witnesses for your contribution today. I commend you that you did not abuse the 5-minute rule, and for that we are appreciative. We will try not to abuse it on our end, as well.

I will start with Professor O'Connor. Professor, your testimony suggests several changes to Title 17 to modernize its impact. To the extent that changes are warranted, should such changes be written in detail or left to broad parameters in order to account for the future technological changes?

Mr. O'CONNOR. Yes, thank you for your question, Chairman Coble. I am always a little nervous about getting too detailed in a statute because, as you mentioned, technology will change. That is why in the first stage of my first proposal I suggested again that we have a voluntary stakeholder process to try to come up with it, and only if that doesn't happen to then move on to some changes. I know that the USPTO and the Copyright Office are both trying to work through some of these voluntary arrangements. It could very well be that Congress could do a change to the statute that would then authorize the Copyright Office to then do some regulations around it.

Mr. COBLE. I thank you, Professor.

Mr. Doda, should there be a numerical threshold of notices or other measures above which ISPs are required to undertake more action related to online infringement and below which ISPs' obligations should be more limited?

Mr. DODA. Thank you, Chairman Coble.

Mr. COBLE. Pull that mic a little closer to you, Mr. Doda, if you will.

Mr. DODA. We do not think there should be limits on the number of notices so long as, of course, the notices are issued in good faith and there is sufficient vetting that the copies are infringing. We would not support limits on the number of notices.

Mr. COBLE. I thank you, sir.

Mr. Sieminski, do you think that the provisions currently in Section 512(f), which create liability for damages, costs and attorney fees in the case of misrepresentations, is notice to adequately protect against the likelihood of abusive takedown notifications? How have courts interpreted this provision?

Mr. SIEMINSKI. Thank you for the question, Mr. Chairman. And I think the answer is we don't really know, and I think the reason is the volume of cases that have been brought under 512(f) have been so low. The reason for that is there is just a great imbalance of power between, I think, those that are sending the notices and those that are receiving them. By that I mean the companies that are sending takedown notices are often big corporations. The people on the receiving end are often individual users. So in order to bring a case, we have only seen a few of them, and I think we, as I mentioned in my testimony, brought a couple recently alongside our users. Without, I think, our intervention, those cases would not have been brought.

So I think the number of cases that we have seen and the amount of case law we have on 512(f) is just very small, so it is very hard to say.

Mr. COBLE. Thank you, sir.

Professor Bridy, should Congress create incentives for voluntary systems to be created to address infringement? And if so, what types of incentives would be most appropriate?

Ms. BRIDY. Thank you, Chairman. I think that the market has created sufficient incentives as evidenced by the fact that we have seen some really meaningful voluntary agreements entered into recently. I think also, at the behest of the Office of Intellectual Property Enforcement Coordinator, which has taken a role in trying to encourage these voluntary best practices agreements. One, as I think you may have mentioned, is the Copyright Alert System between copyright owners and ISPs, Internet access providers. We have also seen some voluntary best practices agreements with ad networks, as Ms. Oyama discussed. (Google has entered into that voluntary best practices agreement.) And also payment processors, online pharmacies.

So I think that the industries have been working together cooperatively without statutory incentives to do so. So I am not sure they would be necessary. Thank you.

Mr. COBLE. Thank you, Professor.

Ms. Schneider, are there other areas besides technical measures that Congress could create incentives to reduce infringement?

Ms. SCHNEIDER. I think that all I have come up with, my ideas, are the three points that I have put forth here, and I think those kind of measures, maybe lawyers are better equipped—we have five of them here—to come up with that. I don't know.

Mr. COBLE. Does anybody else want to weigh in on that?

[No response.]

Mr. COBLE. If so, I see the red light has been illuminated, so I will recognize the gentleman from New York, Mr. Nadler.

Mr. NADLER. Thank you, Mr. Chairman.

Ms. Oyama, we have heard that one of the biggest problems, maybe the biggest, certainly from the content provider's point of view, is the whack-a-mole problem. You serve notice on an infringing thing, it gets taken down, it reappears instantly, and this can go on over and over and over again, and you never catch up.

Professor O'Connor suggested a notice and stay-down procedure. Would you comment on that proposal as a solution or a possible solution to the whack-a-mole problem?

Ms. OYAMA. Yes, thank you. I think all service providers are also very sensitive to this issue because the service providers haven't done anything wrong, and we are also working extremely hard to rid our systems of any of this type of bad content. And I understand why the notion of a stay-down notice and stay-down might be attractive.

I think you really have to look across the products. I think Congress got it right. When they created the DMCA, they did not impose these types of pre-filtering and pre-monitoring obligations on service providers. So companies like Facebook, Twitter, Google, we can allow our users to post content in real time without having to filter every comment and tweet.

I also think we have to think about the scale of the entire Internet. So there are something like 60 trillion web addresses, and almost anything on the Internet can be copyrighted.

Mr. NADLER. Let me focus in a bit more. Ms. Schneider writes a song. That song is improperly posted. She sends you a takedown notice. You take it down. Somebody else immediately re-posts the exact same song. Is there the technology so that, having received a takedown notice on that song or that nursing exam or whatever and taken it down, that the moment someone re-posts exactly the same thing it can be automatically taken down again? That is what I take it you mean by "stay-down."

Ms. OYAMA. The notice and takedown system is the best system for that because the copyright owners themselves are the ones—they know what they own, not the service providers. They know where it is authorized and where it is not.

Mr. NADLER. They have notified you, somebody has notified you that this song is unauthorized. You have taken it down. The exact same song gets re-posted. You don't need a second notice. Is the technology available, and is it easy to use or terribly hard to use, so that you could say that the moment something that has already been taken down gets posted in exactly the same thing, it automatically doesn't go up or it gets taken down automatically without the necessity of a second takedown notice? Is that practical?

Ms. OYAMA. It depends on the platform. It is not practical as a technical mandate on all service providers because if somebody says this is my song and it can only be on two sites, everything else has to stay down, that does not account for fair uses in U.S. law. Members have content of news clips that go up on their websites. There is a lot of different uses for content, and the intermediaries in the middle don't actually know who are the rights owners and where is the content allowed to be.

So this notice of the cooperative approach, where we get a notice and it comes out as the right way, I think there have been some great models in the private sector. On YouTube, because we have Content ID, because these are hosted platforms, we have copies of all of the files that are uploaded, we have copies of reference files, businesses can build on top of that and build new systems.

In our hosted platforms, there is a way rights holders in advance can give us their files and tell us before anything goes up what they want to have happen.

Mr. NADLER. Okay. Thank you. Thank you very much.

Professor O'Connor, Congress also did allow for red-flag knowledge triggering obligations. So at what point should repeat notices trigger some obligation on providers' part? And in answering that question also, if you feel it is advisable, you might want to comment on Ms. Oyama's answer to my question about your proposal.

Mr. O'CONNOR. Thank you, thank you. The issue on the red flags is the way the courts have been addressing it is to use this doctrine of willful blindness, but willful blindness is not in the statute. So we are seeing quite a division among the courts. So I think that what would be very helpful is for Congress to decide on policy, on what willful blindness should mean, and then put it into the statute.

I would also then respond respectfully to Google about the situation with identifying content with my own anecdote, which is that I had videos where I was demonstrating copyright, about how songwriters should think about copyright, using my own guitar, al-

though not playing bluegrass but playing ZZ Top songs. I had posted it on YouTube, and very quickly it was taken down.

I was impressed. First I thought that it was because of my rendition of ZZ Top's La Grange the electronic algorithm picked it up, but I think it was because I also played a little recorded snippet.

So again, the important thing is that those kinds of fair use transformative uses, those are a different category. I think the technology—again, I am not at Google, so I certainly can't speak for them. But I believe, from my experience, the technology is strong enough to recognize that here is the entire song. So again, if it has been already noticed and taken down, then that could stay down.

Mr. NADLER. Thank you.

Mr. COBLE. The gentleman's time has expired.

Mr. GOODLATTE. Mr. Chairman?

Mr. COBLE. Chairman Goodlatte?

Mr. GOODLATTE. Thank you, Mr. Chairman, and I want to thank everyone on this panel. It is an excellent panel of witnesses and excellent presentation of a number of ideas.

About 16 or 17 years ago, then-chairman of the Judiciary Committee, Henry Hyde, asked a relatively junior Member of the Committee to sit in a very hot hearing room—it is no longer a hearing room; I think staff has to use that room now—with about 30 representatives of various interests on this issue, content community representatives and Internet service provider and technology community representatives, and some with a foot in both camps. I was that junior member, and I had literally no idea what I was getting into.

But my job was not to figure out how to solve this problem of getting great content onto the Internet in a digital format but to keep everyone in that room until we succeeded. All of these representatives succeeded in coming up with the notice and takedown provisions and the safe harbor, which were incorporated into the DMCA.

So now, nearly two decades later, how does one measure the success of Section 512? Is it by, as some might suggest, the number of notices sent, or is it, as some others might suggest, by the amount of infringing content that not only is taken down but stays down, or by some other measure?

Let me start with you, Professor O'Connor.

Mr. O'CONNOR. Thank you, Chairman Goodlatte. And again, I want to make very clear that we all very much appreciate the work that was done to put Section 512 in place in the first place. It has on many counts for many years been very successful.

Mr. GOODLATTE. I have a very limited amount of time, so can you get to the question? What is the best measure of success?

Mr. O'CONNOR. Okay. I think the best measure of success is whether it is a balance between the parties, whether you have artists feeling like they can, in fact, get their material taken down and it stays down and that they don't have to engage in the whack-a-mole.

Mr. GOODLATTE. Professor Bridy?

Ms. BRIDY. Thank you. I think the best measure of success is in terms of empirical numbers about the growth of the Internet and

the growth of the industries that distribute content over the Internet. I think those numbers are good news on both sides.

Mr. GOODLATTE. Ms. Oyama, I want to come at the issue that the gentleman from New York was asking about but from a different perspective. Should ISPs be required to respond differently to a takedown notice when it is the 50th or the 50,000th notice of the same content?

Ms. OYAMA. I think generally you want to have a consistent set of obligations. So we have YouTube. We have over 100 hours of content that is uploaded in an hour, a vast amount of content. We need to know each time whether the use is appropriate or not. So just looking at the specific quantity wouldn't be enough.

Mr. GOODLATTE. Mr. Doda?

Mr. DODA. Certainly in some circumstances. I think the key is that one size does not fit all, and I think my written statement and Google's written statement share that sentiment. Where sufficient matching can occur, I think it is appropriate for stay-down. So Google provides, as I understand it, flexibility through the Content ID system, that when sufficient matches occur, they can either be monetized or the rights holder can direct that they be taken down. So I think it is a question of collaboration and coordination in order to achieve that goal.

Mr. GOODLATTE. All right. And the last question I want to ask I will let all of you answer, and that is on this whole issue of whether appropriate penalties exist for those who abuse the notice and takedown system. So I will start with you, Mr. Sieminski. Do you think appropriate penalties exist? And if not, what should the penalties be?

Mr. SIEMINSKI. I would say, from our standpoint, I would say no, just because of the volume of these abusive notices that we are seeing and really just the fact that——

Mr. GOODLATTE. Do you have a solution? Because I am down to a minute, and I have five more people to answer.

Mr. SIEMINSKI. No. I mean, I think we have statutory damages for copyright infringement. We should have——

Mr. GOODLATTE. Something like that.

Ms. Schneider?

Ms. SCHNEIDER. I think that if the proper things are in place to keep improper uploading, once it is up and I say it is down and it goes down, we don't have to worry about punishing people because there are stops to bad Internet behavior.

Mr. GOODLATTE. But you would say there are not adequate penalties now?

Ms. SCHNEIDER. Absolutely not, because——*

Mr. GOODLATTE. Ms. Oyama?

Ms. OYAMA. I think we want to incentivize transparency. We have Google's copyright transparency report by showing actually which sites are targeted and who is sending them. That has helped, I think, everybody in the system figure out who are the best ven-

*The witness inserts the following text to complete her response:

. . . abuse of the current notice and takedown system is very rare and the issue is used as a distraction from the real issue of rampant online infringement. Congress should focus its efforts in this area of the law on making the notice and takedown process meaningful and effective for creators and copyrights owners.

dors here, how does automation help, and then who are the bad actors. News reporters have looked at this, as well. That constantly improves the system to make it more efficient and more accurate.

Mr. GOODLATTE. Mr. Doda?

Mr. DODA. First I think that it has to be placed into context. The number of abuses and mistaken notices are exceedingly, exceedingly rare.

Second, I think the statute itself, as I understand it through the counter-notification process, already provides that if a response to the counter-notice is not made, that in fact the content can be put back up.

In terms of 512(f), we are certainly in support of a level playing field in terms of abuses being addressed, whether it is in the nature of an abuse of a notice or an abuse of a counter-notice.

Mr. GOODLATTE. Mr. Chairman, I know my time has expired, but if we could allow Professor Bridy and Professor O'Connor, I would like to hear them.

Mr. COBLE. Without objection.

Ms. BRIDY. I think the remedies that currently exist are not adequate, and I think statutory damages or some enhanced measure of damages might be appropriate.

Mr. O'CONNOR. I think that they are adequate now for the abusive notices, as we have seen in some of these cases where services have denied actually taking down things.

Mr. GOODLATTE. Thank you very much.

Thank you, Mr. Chairman.

Mr. COBLE. The gentleman's time has expired.

The distinguished gentleman from Michigan, Mr. Conyers.

Mr. CONYERS. Thank you, Mr. Chairman.

I congratulate all of the witnesses on their testimony. It has been very important.

But since I don't question Grammy winners too often, I would like to ask Ms. Schneider and attorney Doda about 512 that places primary burden of finding online infringement on rights holders, and because of the rapid increase and availability of infringing material we have gone through some changes, and I noticed that we got two recommendations from Professor O'Connor, and then we had two more recommendations from Professor Bridy, and then we got three recommendations from Ms. Schneider.

What do you think of these? How do we ensure, especially for the smaller artists and musicians and businesses? Because those are the ones I am mostly concerned with, because the big corporations are going to usually take care of themselves. But give me any views that you have on this kind of an approach, and then I will open it up for everyone else.

Ms. SCHNEIDER. I would like to share with you what I encounter on the Internet when I find an abuse.

Mr. CONYERS. Please do.

Ms. SCHNEIDER. This is what it takes and what typically you see when you upload material. [Witness holds up poster.]

Now, you probably can't read it, and actually you can barely read it when you are on a computer either. It has a little thing you can click talking about Terms of Use or something. But basically, it says nothing about accountability whatsoever.

Now, when I find the abuse, this is what I am given. [Witness holds up poster.]

It is in larger print from the same site. I have not enlarged the print. This is telling me all the hoops I must jump through in order to take it down.

Mr. CONYERS. Quite a few?

Ms. SCHNEIDER. Yes, I will say so. It is pretty frustrating.

Now, I will say, I want to congratulate YouTube because the takedown procedure is such a relief now. It is just so much better, but there is one issue. I took down something the other day, and now this is what the link sends to you. [Witness holds up poster.]

Can you read it? It says, "This video is no longer available due to a copyright claim by Maria Schneider," and then there is a sad face. Now, I find that that is designed to turn animosity toward me. That is, you know, when you put something up on YouTube, all you have to do is put a user name. I don't know who the person is. And now suddenly I have been exposed as the meanie. I think this should absolutely be changed. But otherwise, I like their takedown procedure. It is much better. I think they need work when people upload. It needs to be very robust.

Mr. CONYERS. Attorney Doda? Thank you.

Mr. DODA. Thank you, Mr. Conyers. We accept that the onus is on the rights holder at the outset. I think one way to reconcile the relative burdens when you are dealing with a large corporation with resources or an individual creator obviously diverted from their creative endeavors if they have too much of a burden is, again, through the filtering process, and I would endorse what Ms. Schneider suggested, which is a contribution appropriately verifying that she owns a work, a contribution to a referential database, for example.

I think another factor would be if a notice is sent and there are no counter-notices or objections and it is deemed valid, that her work should stay down. In terms of the difficulties that individuals have in navigating the notice requirements and the shame, if you will, I think those types of issues are properly addressed in a process like the PTO, as I understand, is undertaking to discuss the nuts and bolts, if you will, of the takedown system and improvements that can be made.

Mr. CONYERS. Well, do you think, in closing, that the smaller artists, the non-Grammy winners, the musicians and businesses, aren't they even in a more restricted position than other more successful people in the field, Professor O'Connor?

Mr. O'CONNOR. Yes, I think they are. If you are a smaller artist, you are a small web startup, you don't have the compliance staff to try to get in the middle of the notice and takedown ping-pong match. That is why I do think that if we could have tools made available at reasonable cost to help them, again to stay-down the really infringing stuff, it would take down the volume and they wouldn't have to have a compliance staff of that magnitude.

Mr. CONYERS. That is where I am going to put my emphasis, out of all of the things that I have heard in this hearing, and I thank all of the witnesses.

I thank the Chairman.

Mr. COBLE. Thank you, Mr. Conyers. Your time has expired.

The gentleman from Ohio, Mr. Chabot, is recognized for 5 minutes.

Mr. CHABOT. Thank you very much, Mr. Chairman. I thank you for holding this hearing. I think it has been very good so far, and I want to applaud, first of all, the efforts of Google and other online service providers, what they have done to address the copyright infringement by voluntarily working with content providers. The development of the content idea in similar systems is a testament to a free-market solution, protecting the interests of copyright owners, certainly not perfect, and businesses alike.

This is a step in the right direction, but there is obviously still a lot more to be done, as we have heard here this morning. Only a collaborative effort between the content service providers, payment processors, and advertisers will ensure the development of a more finely-tuned technical system. It is my belief that the best solutions to this problem will be developed not by the government but rather by free-market collaboration.

Clearly, copyright infringement takes an economic toll on both content and service providers alike. For example, Ms. Oyama, you mentioned that YouTube could never even have launched as a startup back in 2005 if it had been required to implement a Content ID system. In what ways and methods has this negatively impacted your businesses and other startup-type companies, and how has copyright infringement stunted growth and development for other online startups? And finally, what collaborations do you hope to see as you move toward a technological solution in addressing copyright infringement?

Ms. OYAMA. Thank you. It is something that all providers face, as well as a challenge. It is something at Google we spend tens of millions of dollars investing systems to root out infringers and eject them from our services. But I think the overall picture is extremely positive, and the DMCA has provided a foundation of legal certainty that has allowed online services to thrive, and then it has also created an incentive to innovate, and we have a lot of mutual business incentives.

So today on YouTube, we have licenses with all the major labels and all of the studios, and we have worked together to build a system of Content ID where rights holders now, when a user uploads content, rights holders can decide what to do. So they can remove it or they can monetize it. Actually, more often than not, the majority will actually now choose to leave the content up and share in the revenue. So they get the majority of the revenue as the rights holder, and then the user gets to keep their content up, and the platforms are also doing well and able to share this.

So I think incentivizing those kind of business partnerships and collaborations so that everyone can kind of grow this pie together and get more content out there with users is the right way to go.

Mr. CHABOT. Let me ask you another question. You had mentioned that you had identified and gotten rid of 73,000 rogue sites. Over what time period was that again?

Ms. OYAMA. Those were in the last 2 years, ejected from our advertising programs.

Mr. CHABOT. The last 2 years? How many of those would you estimate were outside the U.S., originated outside the U.S. versus in the U.S.?

Ms. OYAMA. A large, large number are internationally based.

Mr. CHABOT. Okay, so outside the U.S.

Ms. OYAMA. It's a mixture.

Mr. CHABOT. The vast majority would you say?

Ms. OYAMA. I would have to go back and check on the percentage.

Mr. CHABOT. Okay. If you wouldn't mind at some point, I would be interested in seeing that.

Ms. OYAMA. Sure.

Mr. CHABOT. Ms. Schneider, let me ask you, if I can, I understand and sympathize very much with what you are saying. I think there are a lot of other people out there, maybe college students, maybe younger people, and older people as well, who sort of look like a lot of people in your position as being, well, they are really wealthy and they ride around in limos, and I am just a poor college student and I am really not hurting anybody, and this may be an opportunity for you—and you have, I think, quite eloquently thus far, but is there any message that you would like to say on the other hand, that there is another side to this?

Ms. SCHNEIDER. You mean about the young college student? First of all, I am not driving a limo, you know. I am still $100,000 in debt, and that three-time Grammy-winning album that I made that should have long paid for itself if it wasn't being pirated all over the Internet. And I do talk to young students all the time when I teach in business conferences at colleges. They ask how can I have what you have, and a lot of the conclusions that young musicians are coming to now is what is hurting us is that we are so diluted by being splashed all over the Internet.

So we are slowly, as a community, coming to the conclusion that all this exposure is not coming to us in money. What it is really doing is diluting us, and once somebody sees us all over YouTube in a dozen different performances, they aren't coming to our website and buying the record, and this is what people are finding, and they are hurting. Young people are really, really scared. I am telling you, I hear from them all the time. They ask me what can I do, and you know what I say? I say get educated, start advocating, and write to your congressman.

Mr. CHABOT. Thank you very much.

I yield back.

Mr. COBLE. I thank the gentleman, the gentleman from Ohio.

The gentle lady from California, Ms. Chu.

Ms. CHU. Thank you, Mr. Chair. Before I begin my questioning, I would like to submit two items into the record. First is the op-ed that was co-authored by myself and Congress Member Marino, a member of the Creative Rights Caucus, about the notice and takedown. This editorial came out in today's editorial section in The Hill, and it essentially talks about how our digital copyright system is not working for smaller and independent creators who are ultimately victims of theft but have to fight tooth and nail to protect their property and how we need to take a closer look to improve the notice and takedown notice under DMCA.

The second item I would like to submit is Chris Castle's article in The Trichordist that talks about how the safe harbor is not a loophole and documents five things that we could do right now to make notice and takedown work better for individual artists and creators.

Mr. COBLE. Without objection.

[The information referred to follows:]

THE HILL

Victims of IP theft need better protection

By Reps. Judy Chu (D-Calif.) and Tom Marino (R-Pa.) - 09/12/14 06:00 PM EDT

Christine Filipak is a graphic designer and background vocalist for the popular band Nox Arcana. In a perfect world, she would pour all of her energy into her music — instead, she acts as a de facto copyright enforcer for her band.

Though Nox Arcana's music has appeared in documentaries, television shows and even theme parks with the band's blessing, Christine also finds her music on hundreds of illegal sites, and spends an enormous amount of time issuing takedown notices. In fact, she has collected five gigabytes of screenshots and unanswered Digital Millennium Copyright Act (DMCA) notices on websites where the band's music has been copied and distributed illegally, often supported with advertising by major brands.

Christine is one of thousands of independent creators across the country frustrated by the inefficiencies of the "Notice and Takedown" process created by the DMCA. In principle, the process was created to provide copyright owners, like Nox Arcana, an easy way to notify online service providers when they discover their work is being infringed. At the same time, search engines and others were supposed be shielded from liability if they remove the material expeditiously and abide by the law's requirements.

But in practice, the process is cumbersome and favors non-compliance. It's not working for Nox Arcana and other independent artists. Some liken it to playing "whack-a-mole;" illegal websites get taken down only to pop up somewhere else.

Stopping IP theft should not be this difficult, or so costly, to the individual artist, who is ultimately the victim.

In the first six months of 2013, the largest search engine received more than 100 million DMCA takedown notices. The numbers are staggering, but don't reflect the reality that most indie and small creators struggle to keep up with issuing notices and have simply given up trying to prevent illegal profiting from their work. Independent artists cannot afford employing an entire legal department to monitor the unauthorized use of their content on a daily basis.

And the profits are staggering — a recent study by the Digital Citizens Alliance estimates that the top 596 pirate sites raked in $227 million in advertising revenues last year. These sites had a profit margin of between 80 and 94 percent. Content thieves rely on stealing the rights-protected work of others and distributing on low-cost sites. It's a low-risk, high-reward business.

This week, the House Judiciary subcommittee on Intellectual Property will examine the "Notice and Takedown" process, and to us, it is clear that a very hard look is necessary.

The DMCA was passed in 1998 when the Internet was still very much in its infancy. It was supposed to make things easier for all stakeholders by creating an ecosystem that protects creative works and promotes their dissemination, while also providing safe harbors for the Internet companies that play by the rules. Instead, the ecosystem has become imbalanced, as search engines appear to be turning a blind eye to the infringement on their sites rather than coming to the table to find meaningful solutions.

Permission-less innovation is not innovation at all. Artists should determine how and when their works are used. Yet, the current environment risks chilling artistic expression.

The American people deserve better. The Constitution directs us to promote the progress of art and science. To do so, we must ensure that laws like the DMCA allow for a more efficient compliance process that is practical and effective in a digital world.

It defies common sense that a search engine can receive notice after notice when the same work reappears and not have to do anything more than continue to respond to these notices. Doing the bare minimum is not how the law was intended to function. Search engines need to do more to implement reasonable repeat infringer policies, such as considering the number of notices and takedowns that a site has received when compiling the order of search results and stopping automatic reposting once a link has been disabled under a DMCA notice.

"Takedown" should mean "stay down."

As the Judiciary Committee looks at this issue and continues its review of copyright, we will work to ensure that the voices and views of all creators — including independents like Christine — are heard and respected.

Chu has represented California's 27th Congressional District since 2009. She sits on the Judiciary and the Small Business committees. Marino has represented Pennsylvania's 10th Congressional District since 2011. He sits on the Foreign Affairs, Homeland Security, and Judiciary committees.

TAGS: Computer law, Copyright law of the United States

The Hill, 1625 K Street, NW, Suite 900 Washington DC 20006 | 202-628-8500 tel | 202-628-8503 fax
The contents of this site are ©2014 Capitol Hill Publishing Corp., a subsidiary of News Communications, Inc.

The Trichordist

Artists For An Ethical and Sustainable Internet
#StopArtistExploitation

Safe Harbor Not Loophole: Five Things We Could Do Right Now to Make the DMCA Notice and Takedown Work Better[1]

By Chris Castle

There has been considerable discussion about how the DMCA notice and takedown procedures are "broken." We don't think that this is quite true—the procedures are manipulated, misunderstood and abused on a grand scale. That doesn't mean that the notice and takedown procedure is "broken" any more than the laws against burglary, theft and tax evasion are "broken." No statute can control unethical behavior by those who use the law as a flimsy excuse to get away with bad behavior.

Many Internet companies have interpreted the DMCA to permit bad behavior until the victim of the bad behavior notified the bad actor that they were behaving badly—each time they behaved badly. This "catch me if you can" interpretation of the DMCA was not at all what the Congress had in mind. We would go further and suggest that not only was it not what the Congress had in mind, it also wasn't what the participants in the discussions and negotiations and drafting of the statute had in mind, either.

A review of the history suggests that the true purpose of the DMCA notice and takedown procedure was to provide a *little* latitude to reasonable actors acting reasonably. There is nothing—*nothing*—in the legislative history that suggested that key legislative leaders were ever thinking that any one company would receive a million notices in a year, *much less a million notices in a week, week after week after week*. (Google recently announced that it receives a million notices a week *for search alone*.) [Editor's note: Since we first published this post in 2012, Google now receives more like ***FIVE*** MILLION NOTICES A WEEK!]

What is in the history is that the purpose of the DMCA was to provide a relatively low cost alternative to litigation for both creators and Internet companies when creators spot an

[1] From The Trichordist, September 10, 2012 currently available at http://thetrichordist.com/2012/09/10/safe-harbor-not-loophole-five-things-we-could-do-right-now-to-make-the-dmca-notice-and-takedown-work-better/

unauthorized use of their work which should be a rare occurrence—and we think *should* be accorded a little latitude if reasonable people are acting reasonably. That's what a safe harbor is for—and the DMCA was intended to create a safe harbor, not a loophole.

There is also a threshold qualification to getting the safe harbor in the first place: The site operators shouldn't actually know or have reason to know that there is infringement occurring on their premises. If they find that some users are repeat infringers, the site needs to take them off. Sounds fair, right?

Actual knowledge is the kind of thing that was documented in the *Viacom v. YouTube* and Isohunt discovery. Having reason to know is called "red flag" knowledge, that you have so many indications that infringement is going on that it's like someone is waiving a red flag in your face that anyone could see. Like if you got a million notices a week that infringing was going on.

Another problem is that we have heard that some companies take the position that in countries where there is no safe harbor, they "deem" US law to apply. Aside from the obvious cultural arrogance, if you ask the local courts and lawmakers, we seriously doubt they would be so accepting of US law, so let's not deem that US law applies. Also known as "pretending" that US law applies.

With this in mind, here are five things that could be done today to preserve the good in the DMCA without having to open up the legislation in a negotiation between artists and Big Tech—a process we think would lead to an extraordinarily mismatched negotiation given the tens—soon to be hundreds--of millions that Big Tech is spending on lobbying in the US alone. These would apply as appropriate to any of the various companies that take advantage of the DMCA safe harbors.

1. Stop Playing Games with Red Flag Knowledge: If you receive a million DMCA notices a week, you look pretty stupid if you deny you have actual knowledge, and you seem incapable of sequential thought if you deny you have red flag knowledge that infringing is occurring. A more plausible explanation of this extraordinary burden that such a system places on the economy is that the system is defective, like an exploding gas tank.

Just like a car with an exploding gas tank, the car may do a lot of good and may be useful to consumers. But not with that gas tank. That gas tank has to go. And one reason it has to go is that the car with the exploding gas tank creates an unacceptable level of risk and harm to innocent people who randomly come in its path.

What search companies should do when they consistently receive thousands of notices for a particular site is block that site from search results, not just push them down in search results and continue referring customers to them. The burden would then shift to that blocked site to prove that all those millions of DMCA notices were wrong—even though Google has acknowledged that 97% are accurate.

The reality is that these sites will slither off into the Internet to find something else to do.

2. Block the File, not the Link to the File: The point of the DMCA was to stop the infringement, that is, block the infringing material, not to stop one link to the infringement. It has been interpreted by many, if not all, offending sites or search engines to require a link by link notice, or to require that artists litigate each link to a final nonappealable judgment before the link can be disabled, much less the file can be deleted.

This is a ridiculous interpretation of the law and is solely designed to allow the site to profit from infringement for as long as possible in the hopes that the less-well heeled will simply give up.

Google is particularly well-suited to discover blocked files due to its ContentID system on YouTube. This is not a burdensome task.

3. Don't Treat Sites that Haven't Registered a DMCA Agent as Though They are Entitled to the Safe Harbor: You don't get DMCA protection if you haven't registered a DMCA agent with the Copyright Office. This costs about $150. Other countries have similar laws. Don't act as if a site that hasn't even registered an agent (as a threshold step to claiming the safe harbor) is the same as one that has. If search engines and ISPs act as if sites like Hotfile are entitled to the safe harbor without going through the required steps, this only protects the bad guys and trivializes the proper safe harbor protection for legitimate actors (like those same search engines and ISPs).

4. Don't Support Automatic Reposting: Don't support automatic reposting of links you disabled under a DMCA notice. This turns the entire process on its head because as soon as an artist goes through the expense of taking down an infringing link, the web site allows the link to be reposted automatically and then requires the artist to send the notice all over again. This is not only outside the intent of the law, it is sadistic. Another reason why major offenders need to be blocked from search results by search engines that want to be in the business mainstream.

5. Issue Google-Style Public Transparency Reports: Google's "transparency report" is commendable and provides useful information as far as it goes. Note that the millions of notices Google reports it has received are just from the "premium" web tools it provides to heavy users. Imagine what the numbers would look like if it included notices that were sent manually and included all Google properties.

If each major search engine prepared these public transparency reports, it would be possible to prepare a list of websites that were major offenders based on the number of accurate DMCA notices received. That way, the Department of Justice could have better information on which to determine where to allocate its prosecutorial resources.

Since Google is so interested in letting the world know about the DMCA notices it receives by releasing them through Chilling Effects, surely Google will not object to organizing this part of the world's information as well.

Ms. CHU. Okay. Thank you so much.

Well, MPAA did a study which showed that search engines are the main means by which people get pirated content, so I would like to ask Ms. Oyama some questions about this.

We felt that it was such a positive step in 2012 when you changed your algorithm by taking into account the number of takedown notices for any given site in the ranking system for search. This change could have resulted—it should have resulted, that is, in sites with high numbers of removal notices, takedown notices, appearing lower in the Google search results, therefore helping users find legitimate, quality sources of content more easily.

Yet, several months later, studies show that the sites for which Google received hundreds of thousands of infringement notices are still appearing at the top of search returns. Actually, while we were sitting here and I was listening to your testimony, I decided to see for myself whether I could watch "12 Years a Slave" for free, or "Frozen" for free. So I had my iPad here, and I just input into it on the Google search, and I input "watch 12," and I only got to "12" before something popped up that said "Watch 12 Years a Slave online free." So that was the number-two search term that came up.

And then I wanted to see if I could watch "Frozen" for free, and so I input "watch Frozen" and clicked that one on, and the number-one site that comes up is "Mega Share Info Watch Frozen Online Free," and the number-two site is "Watch Frozen Online, Watch Movies Online, Full Movies."

So there seems to be no real improvement in this algorithm change. Why do we continue to see your search engine ranking the illegitimate sites high?

Ms. OYAMA. Thank you for the question. I think there has been a lot of improvement. When we started working on this problem, what we heard from rights holders was they were concerned, when they were searching for movies and music content, that there were certain results that they were unhappy with. The vast, vast majority of users who are using Google search, they search for movie titles, they search for artists' names, they search for artists' song titles.

So if you go to Google Search Trends—it is a public, open database—you can actually type in the terms and you can see relatively how popular are certain queries. So if you go in and you type "12 Years a Slave," that is going to be a very highly, highly frequented query, and the results there, because of these signals and other things, working with rights holders, they are clean. They are to movie trailers. There are links to purchase, information about the film or its website.

You can also type into the Search Trends "12 Years a Slave, watch free." You can add those other terms that we are talking about. And I just want to make sure that we are informing this conversation with data and being very clear that there are still conversations happening about those very specific queries that end in "free" and "stream" and "watch" and "download." I think there is a lot of collaboration there. It involves a lot of technical steps about optimizing things that are legitimate, and part of that is working with retailers to make sure that the pages there have words like "stream" and "free" and "download" so that those will also surface.

But if you look at actually what users are looking for, the vast majority are looking for artists and songs. They are looking for the types of queries that you can go to Google today, look at those results, they are clean. We are talking about a very relatively small set of queries that we are still working on together.

For those queries, we need something legitimate to surface. So if a film is not available online, it is hard for us. We also lose money if someone goes to pirate sites. We have Google Play, where we would love to rent and——

Ms. CHU. Okay. I wanted to make this point. I didn't put the word "free" in any of my search terms. I just said "watch Frozen," or "watch 12 Years a Slave." So the "free" wasn't in there at all, and yet it came up as number one or two in the search results.

Ms. OYAMA. But the search engine will show what people actually look for, regardless of what you see in the auto-complete.

Ms. CHU. Okay. Well, then I would like to follow with this, which is what I understand your algorithm to be, which is that the takedown notices must exceed 5 percent of the total transactions on that site or there is no algorithm change. And that means that an infringing company could, say, have 500,000 movies uploaded for free. Five percent equals 25,000. So if the number of the takedown notices is less than that—say, 20,000 takedown notices—then it doesn't qualify for an algorithm change. And yet, to me, 20,000 takedown notices is a lot, and it would seem that it could qualify to at least go down on the search.

So my question is, does such a policy exist? And if so, how do smaller and independent creators with limited resources expect to have any impact when sending notices with regard to the search rankings?

Ms. OYAMA. There is no minimum threshold to trigger that part of data. So we are using as a constant feed the copyright removal notices that we get kind of into the algorithms. So there is no baseline threshold of a 5 percent. I think when we are talking about those smaller set of queries, we are actually talking about piracy, which is something we all want to prevent against. We are heartened to see more creativity online. We are heartened to see revenues for these industries increasing and for creators to be using the web tools.

But we also have to realize if we are actually talking about truly bad actors, if we are talking about sites that are popping up that are dedicated to illegal content, we also need to be targeting them at their source, and I think that is where some of the "follow the money" strategies and other things to get them off of the web are really going to be more effective. So targeting the problems, and then making sure we are all working together to direct consumers as much as we can to great content that they are happy to pay for.

Ms. CHU. Thank you. I yield back.

Mr. COBLE. The gentle lady's time has expired.

The gentleman from Texas, Mr. Farenthold.

Mr. FARENTHOLD. Thank you, Mr. Chairman.

I would like to start with Ms. Schneider. I appreciate that you own some songs and some rights. Let's say I want to put up a video of my cat and put some music behind it. How easy is it for me to get a license to put your music, or somebody else's music, under my

cat video? I mean, how many hoops are there to jump through on that?

Ms. SCHNEIDER. You know, anybody who wants to use my music for something, all they have to do is ask me for permission, and that is up to me to give you permission.

Mr. FARENTHOLD. Okay. So I then have to go Google your name, find out who you are. Then I have to go Google the performer and find out who they are. I mean, this is a very complicated process.

Ms. SCHNEIDER. Not really. Why don't you just go to MariaSchneider.com, my ArtistShare website? You can contact me there.

Mr. FARENTHOLD. I guess the point I am trying to make is we saw a dramatic drop—we actually saw Napster and some of these peer-to-peer really drop when legitimate music became much more viably available. Isn't there an opportunity for your industry and some of your artist groups to come up with a way to make it easier for innovators or somebody who wants to create derivative works to license your content and do it legally?

Ms. SCHNEIDER. That is legalese to figure out how to do it. But I am telling you that if my music is used in many different ways without my permission, that is violating my copyright.

Mr. FARENTHOLD. And I appreciate that, and I want to respect your copyright, but I might also want some music on my cat video.

Let me go to——

Ms. SCHNEIDER. Public domain.

Mr. FARENTHOLD.—Ms. Oyama. I am sorry if I got your name wrong.

I am a little bit concerned that search engines, not Google in particular but any search engine, is an enabler for copyright infringement, and I am wondering if your industry might be better served to take a lesson from the MPAA, the content creators. When Congress was threatening to go in and regulate movie content, they created the rating system voluntarily. Isn't a good corporate citizen something that maybe your industry should work together on and finding a way, especially on this whack-a-mole? I can get Shazam in a noisy room and identify a song. It seems like large companies like you guys and Bing, the big companies ought to have the technology to do something more about that and maybe not be required to but do it on a voluntary basis.

Ms. OYAMA. I think there is a lot of ways that we are always working to address this. One of the biggest things that we have done for search is use automation to improve this process so that rights holders can, as easily as possible, let us know. So we have very simple-to-use web-based complaint forms across all of our products.

For search, we are actually processing public information on the transparency page, more than 20 million notices per month, so that is every 30 days.

Mr. FARENTHOLD. I am just curious about the other side of that. Of that 20 million takedown notices you get, how many do you get a counter-notice on?

Ms. OYAMA. Small. We say on the transparency report that we process about 99 percent. So the remaining 1 percent were rejected

because they were either erroneous or because there was a counter-notice.

One more thing just on the search?

Mr. FARENTHOLD. Sure.

Ms. OYAMA. We absolutely agree with you on wanting to direct users to legitimate content. So if you look for something like "Frozen," you may also see at the top a very new feature that we have added, which would be some advertising services to direct people on one click to go purchase it. There are also the knowledge panels on the right, which is authorized content.

I just wanted to be clear, we do not want infringing links in search, and as much as possible we are always trying to direct them to YouTube or Play and platforms that make money for everybody involved.

Mr. FARENTHOLD. And I think we have to be careful as we draft regulations on this. Expecting something of a large company like Google is very different from expecting something from a small, independent website owner or even smaller ISP. On your YouTube platform you will have the technology and expertise to do this screening, but if I have a bulletin board up and somebody uploads a copyrighted photo, I don't think I would have the resources to go check to see whether or not that was copyrighted or not. I could easily deal with a takedown notice.

So again, I encourage the industry to cooperate with the artist to find a way to end that.

I am out of time. I had plenty more questions, but in respect for the 5-minute rule, I will yield back.

Mr. COBLE. I thank the gentleman from Texas.

The gentleman from Florida, Mr. Deutch, is recognized for 5 minutes.

Mr. DEUTCH. Thank you, Mr. Chairman. Mr. Chairman, I would like to request that a letter from the Copyright Alliance be submitted for the record.

Mr. COBLE. Without objection.

[The information referred to follows:]

Statement for the Record of Sandra Aistars, Chief Executive Officer, Copyright Alliance,

Committee on the Judiciary

Subcommittee on Courts, Intellectual Property and the Internet

U.S. House of Representatives

"Section 512 of Title 17"

March 13, 2014

Statement for the Record of Sandra Aistars, Chief Executive Officer, Copyright Alliance,
Section 512 of Title 17
Before the Judiciary Committee's Subcommittee on Courts, Intellectual Property and the Internet

March 13, 2014

The Copyright Alliance is a nonprofit, nonpartisan membership organization dedicated to promoting and protecting the ability of creative professionals to earn a living from their creativity. It represents the interests of individual authors and small businesses across a diverse range of creative industries – including for example, writers, musical composers and recording artists, journalists, documentarians and filmmakers, graphic artists and illustrators, photographers and software developers, as well as artist membership organizations, guilds and unions and corporations and organizations that support and invest in the work of these creative professionals.

The Copyright Alliance and its members embrace all of the new technologies that enable their work to be appreciated by the public in new and innovative ways, including those some may consider "disruptive" of traditional business models. We submit these comments to help the Subcommittee understand the challenges faced by the creative community when relying on the Digital Millennium Act (DMCA) to ensure vibrant and thriving outlets for our creative endeavors.

It is incontrovertible that roughly fifteen years after its passage, the DMCA is not working as intended either for the authors and owners of copyrighted works who rely on its notice and takedown and repeat infringer provisions to reduce infringement of their works, nor for the website operators who must respond to the notices sent. When authors are forced to send upwards of 20 million notices a month to a single company—often concerning the same works and the same infringers—something is amiss.[1]

Academics who have studied Section 512 notices conclude that they are "largely ineffective for most works. Even for the largest media companies with the most resources at their disposal, attempting to purge a site of even a fraction of the highest–value content is like trying to bail out an oil tanker with a thimble."[2]

---

[1] As of February 2014, Google stated it removes over 24 million URLs a month from its search engine as a result of DMCA takedown notices. https://www.google.com/transparencyreport/removals/copyright/.

[2] Bruce Boyden, *The Failure of the DMCA Notice and Takedown System: A Twentieth Century Solution to a Twenty-First Century Problem,* December 2013, available at http://cpip.gmu.edu/2013/12/05/the-failure-of-the-dmca-notice-and-takedown-system-2/.

For the hundreds of thousands of independent authors who lack the resources of corporate copyright owners, the situation is even more dire. These entrepreneurs cannot dream of the robust enforcement programs that larger companies can afford. Instead, they pursue issuing takedown notices themselves, taking time away from their creative pursuits, or give up enforcement efforts entirely.

Examples of this are well documented. Kathy Wolfe, owner of a small independent U.S. film-distribution company called Wolfe Video "found more than 903,000 links to unauthorized versions of her films" in a single year—this corresponds to an estimated loss of over $3 million in revenue in 2012 from her top 15 titles alone.[3] In addition to her lost revenues, Ms. Wolfe "spends over $30,000 a year – about half her profit – just to send out takedown notices for her titles."[4] This "very damaging trend" has forced her to halve her marketing budget, cut her employees' pay, and discontinue her own salary.[5]

Sadly, Ms. Wolfe's story is not an uncommon one.

Tor Hansen, co-president and co-founder of YepRoc Records/Redeye Distribution and board member of the American Association of Independent Music ("A2IM"), pointedly summarized this predicament for this Subcommittee earlier in this series of hearings:

> Unfortunately due to the ever-shrinking overall music market revenue base, [independent] music labels like mine as [small- and medium-sized music enterprises] simply do not have the financial means or resources to engage in widespread copyright monitoring on the Internet. The time and capital investment required for our community of like-minded, but proudly Independent small business people to monitor the web for usage and take subsequent legal action simply does not exist. [Independent] music labels do not have the financial means or resources to house a stable of systems people and lawyers to monitor the Internet and bombard users with DMCA takedown notices for seemingly endless illegal links to our musical copyrights. [We] have limited budgets and whatever revenues and profits [we] can eke out are directed toward [our] primary goals, music creation by their music label's artists and then the marketing and promotion of this music to the American public so they are able to continue this creation process.[6]

---

[3] Christopher S. Stewart, *As Pirates Run Rampant, TV Studios Dial Up*, The Wall Street Journal (Mar. 3, 2013).
[4] *Id.*
[5] *Id.*
[6] *Innovation in America: The Role of Copyrights: Hearing Before the Subcomm. on Intellectual Proper., Competition, and the Internet of the H. Comm. on the Judiciary*, 113th Cong. 6 (2013) (statement of Tor Hansen, Co-President/Co-Founder YepRoc Records/Redeye Distribution).

The situation is even worse for individual authors and artists. Any time spent fighting infringement of their works takes away from the time they would spend on creating new works for the public to enjoy, and the money needed to enforce must come out of their personal income or savings. As artist Lorene Leftwich Sisk noted in a letter to the Copyright Office, in order to prevent online infringements of her artwork, she either stops selling her art on the Internet, or she ends up sending 50 DMCA takedown notices per year; and in her words, "[I] don't have time to waste [on] all these infringements."[7]

Independent authors often find themselves in a never-ending battle with unscrupulous website operators who pay mere lip-service to obligations of the DMCA while enjoying its safe harbors. Author and publisher Morris Rosenthal testified in a submission to the Copyright Office that file-sharing networks "hide behind the DMCA and links to pirated books are often reposted on the same site within hours of processing a DMCA complaint."[8] He observed that "content farm" websites that post stolen content claim DMCA safe harbor protection while at the same time "syndicate the plagiarized material to hundreds or thousands of other sites, all of whom claim DMCA protection, making it impossible for an author to have all of the infringements removed."[9] In one instance, he "found [his] book . . . [online illegally] within a day of it being posted [for sale], and not only were there already a thousand downloads, there were over fifty comments posted by different people thanking the individual who posted the file."[10] Mr. Rosenthal told the Copyright Office that, as a result of the efforts required to fight the tsunami, he has "dropped all attempts at writing new books in an attempt to fight copyright infringements and preserve the core of [his] publishing business."[11]

Artist and designer Christine Filipak has had similar experiences. As the de facto copyright enforcer for popular gothic rock duo Nox Arcana, she has collected over five gigabytes of screenshots and unanswered DMCA notices over the past several years, showing hundreds of commercial websites where the band's music is copied and distributed illegally. Her experience demonstrates that the DMCA process has become far more difficult than it need be.

From these examples it is clear that the volume of infringement individual authors and small businesses must manage online is having a chilling effect on artistic expression. To make matters worse, many recipients of takedown notices, supported by organizations

---

[7] Letter from Lorene Leftwich Sisk, to U.S. Copyright Office (2012) (on file with U.S. Copyright Office) (submitted in response to solicitation from U.S. Copyright Office re copyright small claims).

[8] Letter from Morris Rosenthal, to U.S. Copyright Office, at 2 (2012) (on file with U.S. Copyright Office) (submitted in response to solicitation from U.S. Copyright Office re copyright small claims).

[9] *Id.* at 3.

[10] *Id.* at 2.

[11] *Id.* at 1.

such as the Electronic Frontier Foundation, attempt to intimidate and bully those artists who do stand up for their rights. The site Chillingeffects.org, for example, bills itself as a "clearinghouse" for DMCA notices. It publishes notices forwarded to the site by recipients such as Google, leaving intact information that directs readers to the infringing URLs. Until recently the site also publicized the names and personal information of any artist sending a notice to seek the removal of an infringing URL.

The activities of chillingeffects.org are repugnant to the purposes of Section 512. Data collected by high-volume recipients of DMCA notices such as Google, and senders of DMCA notices such as trade associations representing the film and music industries demonstrate that the overwhelming majority of DMCA notices sent are legitimate[12], yet the site unfairly maligns artists and creators using the legal process created by Section 512 as proponents of censorship. Moreover, by publishing the personal contact information of the creators sending notices (a practice which Chilling Effects only recently discontinued), it subjects creators to harassment and personal attacks for seeking to exercise their legal rights. Finally, because the site does not redact information about the infringing URLs identified in the notices, it has effectively become the largest repository of URLs hosting infringing content on the internet.

Several steps could be taken to improve the situation. First, stakeholders, including representatives of search engines, online service providers, website operators, vendors that issue DMCA notices on behalf of rightsholders, and rightsholders of all varieties (including representatives of individual artists and small businesses) should be required to confer with the encouragement of Congress or an expert agency with the goal of identifying technologically reasonable steps that can be taken to minimize the occurrence and recurrence of infringements online. These discussions should also include means of streamlining the sending and receipt of Section 512 notices so that the burden is reduced on both issuers and recipients of notices. The stakeholder consultation process the United States Patent and Trademark Office has announced it will begin next week offers a promising opportunity for having such discussions.

Second, these same entities should work cooperatively to elaborate repeat infringer policies. Some useful progress has already been made in this regard by multi stakeholder groups such as the Center for Copyright Information. Such efforts should be expanded to include other stakeholders and additional categories of creative works.

---

[12] MPAA, for example, reports that its companies sent a total of 25,235,151 notices regarding infringing URLs to site operators and search engines in the time period between March 2013 and August 2013. In response, they received a grand total of 8 counter notices. Bruce Boyden, *The Failure of the DMCA Notice and Takedown System: A Twentieth Century Solution to a Twenty-First Century Problem,* December 2013, available at http://cpip.gmu.edu/2013/12/05/the-failure-of-the-dmca-notice-and-takedown-system-2/.

Finally, Congress should question the motives of groups such as those that back Chilling Effects and attempt to shift focus away from the flood of takedown notices going to service providers to little effect and toward the rare and isolated notice sent in error or bad faith. Members of the Copyright Alliance and other good faith participants in the internet ecosystem want to minimize the need to send DMCA notices. No creator wishes to devote time directing notices at the wrong targets, especially when, as detailed above, they don't have enough time to go after all the right targets. The DMCA already provides relief for bad-faith takedowns.[13] There is simply no evidence that such takedowns warrant placing additional burdens on already overburdened creators.

The DMCA's goal of encouraging "service providers and copyright owners to cooperate to detect and deal with copyright infringements that take place in the digital networked environment" remains a vital one. The Copyright Alliance appreciates the efforts of this Subcommittee to ensure that the tools created by Section 512 can be used effectively, without fear of retaliation, and without imposing undue burdens either on those who send or those who receive such notices. We stand ready to assist in any stakeholder effort the Subcommittee or an expert agency may convene in this regard.

[13] 17 U.S. Code § 512(f).

Mr. DEUTCH. Thank you. I think this letter highlights some of the problems that creators have with the way that the DMCA is currently working. As we look at the strengths and weaknesses of the current system, it is important to keep in mind, as I think so much of this hearing has done, the experience of artists and creators, especially independent artists, Ms. Schneider, who rarely have access to the resources and infrastructure that are needed to keep up with this Internet piracy whack-a-mole. That is the difficulty that you face.

I agree with, I think, most of the witnesses that the balance struck by the DMCA to encourage cooperation and to preserve protections for technology companies acting in good faith is the right one. As many have already said today, without the DMCA protections, it would be hard to imagine the growth of the Internet and other digital services that we have seen over the past decade.

This hearing and the Committee's subsequent work examining copyright law will be a much needed opportunity to ensure that the current balance of the DMCA is working for creators and technology providers without imposing undue burdens on either side for takedown notices, and it is this balance that I am concerned about. I think the letter of the law was clear that the DMCA was designed to protect good-faith actors from liability but not to protect people who were benefitting financially from pirated content. But the reasonable division seems to have become obscured as courts have looked at it.

Ms. Oyama, I just wanted to ask you about that. It is my understanding—and I would like to give you the opportunity to help me understand how we are coming at this issue—that Google has intervened as a friend of the court in a number of cases, including those against infringing file-sharing and cyber locker sites, to press the view that the DMCA is available as a defense not only for innocent service providers but also for those who are actively inducing copyright infringement, which is surprising to me. As the Supreme Court defined inducement, it applies specifically to people who act with, and I quote, "an unlawful objective to promote infringement, and premises liability on purposeful, culpable expression and conduct."

In one of these cases, the district court described inducement liability and the safe harbor as inherently contradictory and how there is no such safe harbor for such conduct. But my understanding is that Google has strongly rejected that view, arguing instead that the DMCA protects qualifying service providers against all claims of infringement, including inducement.

So something would seem to be wrong if the safe harbor offers liability protection to people who are engaged in purposeful, culpable expression and conduct with an unlawful objective to promote infringement. I would like to hear your views on that. Help me understand where you are coming from to clarify the issue.

Ms. OYAMA. I am not aware of the specific briefs there, but I think the DMCA, the critical purpose there was to incentivize providers to participate in this cooperative process to give them legal certainty so that they can grow their services, and today we are seeing tremendous boost to the creative industries based on these platforms.

The case law that I am aware of has been very good in distinguishing bad actors, sites where they have been found to be committed to engaging in piracy, things like the Hot Files, from legitimate services like YouTube and Google. We have also been targeted by these types of lawsuits. We have had to spend a lot of money defending ourselves, and today these are the platforms that are helping more than a million different creators earn revenue, sending more than a billion dollars just back to the music industry.

Mr. DEUTCH. So the law shouldn't be used to shield those engaged in copyright infringement and inducement from liability. That is not the purpose of the law, is it?

Ms. OYAMA. No. The law should be—if you are a good actor and you are abiding by the DMCA in your responsibilities, I think you don't want to be the target of litigation. If you are not, there are bad sites that don't operate within the DMCA, they are pursuing——

Mr. DEUTCH. I just want to be clear, though. It is not a question of operating within the DMCA. It is whether the purpose of the site is to induce infringement of copyright. Then that site and those site operators shouldn't be entitled to the safe harbor provisions of the DMCA whether they are technically falling within them or not.

Ms. OYAMA. That sounds reasonable. Sometimes in amicus briefs there are many different issues that come up. I would be happy to follow up with you on that.

Mr. DEUTCH. In the last few seconds I have, if others on the panel have thoughts on this? Professor?

Mr. O'CONNOR. Well, I think one thing that should be clear here is that there are mechanisms, then, to allow content to be legitimately licensed. So I think the issue is that we should not be using the safe harbor to shield people who are just putting up clearly, blatantly infringing material. There are easy ways to get at it legally.

Mr. DEUTCH. Thank you.

Thank you, Mr. Chairman. I yield back.

Mr. COBLE. I thank the gentleman. The gentleman's time has expired.

The distinguished gentleman from Pennsylvania, Mr. Marino.

Mr. MARINO. Thank you, Chairman, and thank the panel members for being here.

I hear dozens and dozens of war stories from creators who have come to personally see me and they have shared their nightmares with me, almost exactly the way Ms. Schneider has genuinely and eloquently stated what she has been going through. So with that in mind, Mr. Sieminski, I see that you mentioned in your statement that you have seven people that are devoted to addressing the notice and takedown requests full time. So pursuant to that, if you receive hundreds of notices and takedown requests for content posted by the same user on your site, is there a process of how you can interact with that user? Number one.

Number two, do you put a hold on their account? Number two.

And number three, do you relay some sort of warning against posting more content in the future?

And if you need me to repeat any of those, just tell me.

Mr. SIEMINSKI. Thank you for the question. To answer your question, yes, as required by the law, we have a repeat infringer policy, as most websites do, and if a user does receive over a certain amount of notices for their site, their account is suspended permanently. So the answer is yes.

Mr. MARINO. All right. Thank you.

Ms. Oyama, you and I had the opportunity a couple of weeks ago to talk about many issues, this being one of them, and it was very enlightening. I mean, you showed me a lot of what was being done. I guess I am looking at this from a proactive approach. We talked about the red light/green light system a little bit by which a provider would denote in a search result those sites which may have been tagged as likely to contain infringing content with a yellow or red light or some explanation.

Would you be willing to create with the providers that you can work with, or you at Google create a method to implement this type of system? And further, would you be willing to move these authorized, legitimate results to the top of the page?

Ms. OYAMA. I think we always want to have authorized, legitimate results appear. We have done a lot of great work, especially using the signal and other things, working with rights holders to make sure that for the vast majority of queries that are related to media and entertainment content, the ones that I discussed earlier about looking for films, that the legitimate results are surfacing.

I think the red light/green light concept that we talked about was in the context of kind of flagging for users that sites might be good or they might be bad. I think we just have to remember that DMCA applies to all service providers. There are 66,000 or more.

Mr. MARINO. I understand that, but I am really one that does not want the Federal Government to get involved in what it is involved in now. I am a states' rights guy, and I want to see less Federal Government in my life. But we need to ramp this up a little bit, and I am looking toward the industry. I am having some faith, for the time being, in the industry and the providers to come up with methods. I mean, Google, you are a smart operation over there. I am very impressed. But I am looking to you to create a system whereby people like Ms. Schneider are not damaged as they are.

For example, when someone types in a "movie free," can you not do something? I can't believe you cannot. I think we can. If we can put a man on the moon and we can transplant a heart, we certainly can say that when someone shows up "free," do something about that. Help me out. Give me some suggestions, please.

Ms. OYAMA. Yes, okay. So I think we cannot strike the word "free" from search. There is a lot of legitimate free music and movies, and that is good for everybody. It is good for consumers. Some artists, the first thing they want is they want people to know about who they are. They want to get their name recognition out, and from there they use popularity. Songs go viral. They go number one on iTunes. They travel the world. These are good things to have the Internet available to have distribution of music.

I think the key place here that we all can continue to work together is how do we surface legitimate content. So if we want to fight piracy, we need to increase the availability of legitimate offerings.

Mr. MARINO. Let me stop you there for a moment. I mean, there has got to be a process by which, when certain words come up—"free," "I don't want to have to pay for it"—that that can be flagged.

Ms. OYAMA. Right, yes.

Mr. MARINO. My 18-year-old daughter, my 14-year-old son make these little programs to do some things that I just can't believe they are doing.

Ms. OYAMA. One of the places we have had some good conversations with folks about is if you want legitimate pages to surface for a query for "free," the pages should have the word "free." So you could say "free music sample," anything with that word "free" that would help it surface.

We are also trying to use additional space in search on the knowledge panel and the advertising to get customers to purchase.

Mr. MARINO. Let me get to another question concerning mobile apps. Malicious and——

Mr. COBLE. Very briefly. The gentleman's time has expired, but one more question would be fine.

Mr. MARINO. The mobile app.

Thank you, Chairman.

There have been quite a few high-risk Android apps and growing, from 6,000 in the first quarter of 2012 to 1,100,000 in 2013. Malware in apps is a huge concern. What can we do about it?

Ms. OYAMA. Apps is a tremendous space. We have Google Play. As folks move to mobile, being able to purchase legitimate content, we are really hopeful that is going to grow opportunities for artists, from independent creators to the biggest companies. We are super, super excited about the direction of mobile.

For apps, the biggest thing there I can just tell you in terms of DMCA, we have notice and takedown procedures. We kicked out about 20,000, 25,000 apps last year under this notice and takedown system.

Mr. MARINO. Chairman, thank you.

Mr. COBLE. You are welcome. The gentleman's time has expired.

For the information of all the Members, we will have 5 additional days for the Members to submit appropriate questions and for the witnesses as well to respond, so nobody is being cut off.

The gentleman from Louisiana, Mr. Richmond.

Mr. RICHMOND. Thank you, Mr. Chairman.

Let me just say that, especially in my time in the state legislature, sometimes we are forced to act, and I acknowledge that we are probably not the best people to act on this because technology changes so fast. But if we are forced to act, I don't think anybody is going to like what we do because it wouldn't be a comprehensive solution. So I would suggest that stakeholders get together and figure it out.

But let me just start with you, Ms. Oyama. You mentioned the auto-complete. I guess my question is can you all manipulate or manage the auto-complete? Because someone who is just going to Google about "12 Years a Slave," once you get to "12 Years" and you see all of them come up, and one says "free" or "watch for free," then you are pushing them to that space even if they didn't want to go there.

I am thinking of my mother, who is probably not an Internet sophisticated person. So if I can get her to go Google "12 Years a Slave," and she sees "free," you kind of are enticing her to go that way. So can you all manipulate auto-complete at all?

Ms. OYAMA. I just want to be clear on the interaction between auto-complete and search results. You can go into Google Search Trends today and you can actually see what real users are actually typing in, and you can see that it is the movies and artists. You can go into Google, type those queries, and there are clean results. On any links that are a problem, we will take them out. We take out more than 23 million——

Mr. RICHMOND. No, no, I understand the results. But I am strictly speaking of the auto-complete.

Ms. OYAMA. The policy that we have, actually, it has been a good ongoing conversation with rights holders. So our policy is we will accept terms. If rights holders are concerned that these terms are closely associated with piracy, we have accepted them. We have actually accepted almost every term we have received.

But a word like "free," you can't strike. A word like "music," things like that, there is actually a lot of legitimate content offerings. But if they pass that threshold, there has been a good amount of coverage on this. There are definitely terms and words, services that have been removed, and it is not a finished conversation. So if there are more words that are concerning to folks, that should be an open conversation. There are always new services popping up or new bad actors, and we want to make sure that that does stay updated in real time.

Mr. RICHMOND. Well, let me ask your opinion on something. I represent New Orleans, which is a hotbed of creativity, whether it is independent filmmakers, whether it is musicians, and whether it is small authors who self-publish. What advice would you give them in terms of protecting their copyright, considering they are probably not a big corporation and they are just someone who loves music and would like to earn a living singing, whatever they are singing about?

Ms. OYAMA. Yes. You know, some of the advice I actually get from them, which is how excited they are about the web and how important it is for them to be looking at new distribution models. So I think 5 years ago if we were having this conversation, everyone, probably even in the industry, was very focused on takedown, things we don't want on the web, or we want total control, and today we are seeing tremendous opportunities. When users are getting excited about music, that is awesome for the original creator, and they are, in turn, being able to monetize that, get revenue, grow their audience.

So I would really encourage them to stay focused on the enforcement, and different people are more focused on that than others, but to also think about the other ways that they can use the Internet to enable their businesses. There was an op-ed that I read this morning by Jo Dee Messina, a really well-known country artist, and it was titled "How the Internet Saved My Career." It is about how she used things like analytics that would show her where users are based who are watching her videos or listening to her music, and you can actually add those to your tours. So for the cre-

ators that you are working with there, they may not even realize that there was a population of fans in Canada, and they could add that city to their tour, things like that, things about collaboration.

So different artists working together on the web and joining different fan bases together, figuring out I think pretty quickly what it is you want as your monetization strategy. So for YouTube, we have the ability to run advertising around the content so that the rights holder gets the majority.

Mr. RICHMOND. Right. But I would just ask that you use your legal mind and pretend that the artist is your client and think about how you would advise them in protecting their copyright and making sure that others are not making money off of something that they shouldn't, especially when you look at the investment sometimes that people put out in life savings. We don't want others to just come in and take it.

Ms. OYAMA. Absolutely.

Mr. RICHMOND. So it is a delicate balance, and I would just ask that everybody look at it from the other person's side so that we can get to a good place here where everybody is maybe not happy but content and pleased that we are understanding each other.

With that, Mr. Chairman, I yield back.

Mr. COBLE. I thank the gentleman.

The gentleman from Missouri, Mr. Smith.

Mr. SMITH OF MISSOURI. Thank you, Mr. Chairman.

Mr. Chairman, I want to express my thanks again for holding these copyright hearings. It has been very beneficial and helpful to get down to the point.

And I want to thank all of you for appearing here today.

And I also want to thank all the stakeholders for working together to help solve this problem outside of this room, and I think you can do a lot of that upon your own work.

But my question is for Mr. Doda. In your written testimony, you mention the need for the private entities to enter into voluntary agreements to help combat infringement in some sense, and I definitely agree with you, as I mentioned earlier. I tend to be a fan of less government involvement in most of our way of life, but we have already seen some of these agreements, and for that I applaud the parties involved in those agreements.

But I would like for you to briefly elaborate on some of the key components of what you think these agreements should look like.

Mr. DODA. Thank you for the opportunity, Congressman. We are encouraged at Elsevier by some of the voluntary private agreements, particularly with respect to ad services and payment providers. The difficulty we see with some of those agreements are that they, in effect, are a bit cumbersome to accomplish their task. I could follow up in more detail, but my recollection of the voluntary agreement with respect to ad services, for example, essentially imposes another layer of notifications. So that would be one issue.

The voluntary measure that I am aware of in the payment sector is one that unfortunately is not well suited to a problem that we experienced with these host sites that are overrun with user-uploaded content. That mechanism, by virtue of the way that pro-

gram operates, would not, in fact, we think, adequately capture those types of sites in terms of stopping the payment processing.

Mr. SMITH OF MISSOURI. All right. Thank you.

Ms. Oyama?

Ms. OYAMA. Yes.

Mr. SMITH OF MISSOURI. We heard a lot today about Google's Content ID program. Could you briefly highlight for us how and why this tool was able to be produced, and do you think there are ways of improving on it?

Ms. OYAMA. Yes, thank you. I think the DMCA played a big role in providing the foundation for companies like YouTube to develop really great tools like Content ID. So YouTube is a well-known brand today, but it did start also as a couple of guys in their garage with a great idea, and what the DMCA does is it provides this playing field, it provides a system that if you are a new company and you are launching your service, you are launching your start-up, you can be clear on what the rules of the road are. You can get investment and you can start to build, and then over time maybe your business gets bigger and maybe you become more well known, it becomes more sophisticated. When YouTube became a part of Google, we really injected a huge amount of effort, so more than $60 million, more than 50,000 engineering hours went into building this system.

What it does today is it allows us to get fingerprint files from rights holders. So they will give us the technical fingerprint of their film or their song, and then that allows us, when users are uploading their content, we scan more than 15 million fingerprints, and if there is a match we go back to the rights holder and we ask them what they would like to do. They can take it down if they want, they can track and use analytics, or they could monetize. The vast majority actually choose to monetize.

We sent more than a billion dollars just back to the music industry alone in the last couple of years. But many more independent creators are also making easily six figures on this through those channels. This is the way that they grow their audience, the way that they reach new fans, and actually how they get revenue.

So from people like songwriters to artists to filmmakers alike, they are using this system extremely well.

Mr. SMITH OF MISSOURI. All right. Thank you.

Thank you, Mr. Chairman.

Mr. COBLE. I thank you, sir.

The gentle lady from Washington.

Ms. DELBENE. Thank you, Mr. Chair.

And thanks to all of you for being here today.

One thing we haven't quite talked about as much yet is that there are really no borders on the Internet, and we know that as we discuss what we do here domestically, we still are going to be impacted and content will be impacted internationally.

So I wanted to get feedback from all of you on what you think might be doing well in other places, what issues we should be aware of as we look at the impact we are going to have from international laws, international content or people, international websites and how they deal with content.

So I just wanted to start with you, Ms. Oyama, since you deal with this already, on how you see what the challenges we face or what we need to keep in mind.

Ms. OYAMA. Thank you. So on the enforcement side, a couple of places. One is when we know that sites are based in foreign countries, sometimes they are with countries where we don't have very good diplomatic relationships. Other times we actually do. They could be an allied country. So I think figuring out how to better apply and coordinate some international diplomatic pressure to target bad actors would be a good place. We have also endorsed "follow the money" strategies, that if we can actually get to those foreign sites, drying up any U.S. ties or any incentives to help them with their revenue is super smart. We are really happy to have the ad networks best practices in place.

There are actually hundreds of other ad networks in the ecosystem. So although the leading ones have now stepped up, we love to see that spread further so that the real financial incentives of those business models isn't just to get a new ad network but actually to have no advertising.

The third thing I would add on the foreign policy side is I think there is an increasing awareness that there are tremendous amounts of the U.S. economy that are economically reliant on these other parts of U.S. law. So the exclusive rights have been extremely important for creators. We want to continue to press on them. But things like fair use and these safe harbors, many U.S. companies, every Internet company relies on these to exist. So if we see those safe harbors threatened or eroded in foreign countries, that means we wouldn't be able to deliver our services like Play or YouTube into those countries. That wouldn't be good for the creators for making revenue or for the American companies.

So I think having that ongoing conversation with new companies that are starting to build up their Internet policy frameworks would be fantastic.

Ms. DELBENE. Ms. Schneider, how about you in terms of I don't know if you have had any interaction there.

Ms. SCHNEIDER. Well, one thing I would say is that sometimes I hear people say, oh, we don't have to do anything really because the whole world is such a mess, and I just feel like we should set the bar as an example to the world about how to go ahead protecting artists. I mean, a company that is making billions on their own patents, thousands of patents, and on artists' intellectual property, now look at me and my community and what we represent. We are hemorrhaging red ink on our intellectual property. There has to be something that brings these two sides together and makes it sustainable.

I want to feel good about this whole world. I want it to benefit me. I don't want it just to benefit the big players. And like Ms. Oyama said, there was somebody on YouTube that did so great and had millions of views. That is like going into a poor neighborhood and finding one person that won the lottery and saying, wow, look, you won the lottery, while everybody else is suffering. So that is my view.

Ms. DELBENE. Thank you.

Professor O'Connor, you talked about the kind of blurriness between what we think of as content creators and providers. So as we look around the world, do you have feedback on what we need to do and what we need to keep in mind and not have just pure categories of industry players who are either just content creators or are just service providers?

Mr. O'CONNOR. Yes, thank you for that question. As Ms. Oyama was saying, there are a lot of exciting platforms now for artists to try to promote their careers, so more and more artists are stepping over into being entrepreneurs themselves. So what we need to do, though, is to allow them an environment in which they do know that they can do the right thing, respect rights, and not be taken advantage of by people who then will just relentlessly repost.

So, in other words, if we don't give them the right space and tools to be able to do the right thing, then they will have to start acting like the other side that just relentlessly infringes.

Ms. DELBENE. Thank you.

My time has expired. I yield back, Mr. Chair.

Mr. COBLE. I thank the gentle lady.

The gentleman from Georgia, Mr. Collins.

Mr. COLLINS. Well, thank you, Mr. Chairman.

You know, we are talking about songs and your deep love of bluegrass. I am from the north Georgia mountains, and also remember that you helped a gentleman named Earl Scruggs. Here you go, Mr. Chairman, here is some bluegrass.

[Music.]

Mr. COBLE. Pardon my immodesty, but I was invited to present Earl Scruggs with his Grammy Award, oh, I guess five or 6 years ago, and I will never forget. He reached over and touched my shoulder. He said, "Thank you, man, for coming out here." Thank you for that.

Mr. COLLINS. I wanted to bring back good memories for you, Mr. Chairman.

As many of you know, I try to bring it back to what the bottom line is. That is the user and that is the person, that is the creator, that is the formats. And again, that is just from our Chairman's perspective, but we all have those memories.

Ms. Bridy, I have a question for you. In your written testimony you say that it is reasonable for cost of enforcement to fall more heavily on content owners. But what about the individual songwriters and the independent filmmakers? They often have limited or no technical expertise or software at their disposal to ease some of these costs to make enforcement meaningful.

We met with the Directors Guild, 15,000 independent directors, true creative incubators. These are small players who can't afford to absorb those costs with those practical mechanisms to operate within the DMCA framework.

How do you address the small creator issue?

Ms. BRIDY. I think it is a great question, and I think it really is important to remember on all sides of this issue that the different actors are differently situated, right? There are large corporate rights owners and small creators; there are also large Internet service providers—online platforms like Google, and then also very much smaller ones.

So I think that one key would be to make it easier for people like Ms. Schneider to navigate the takedown process by having fillable forms like Google does. I think it is probably not that expensive for most smaller Internet companies to just have a fillable form for DMCA compliance so that there can be electronic submission of takedown notices. I think that is probably a fairly easy place to start.

But I think it is also important to remember that companies like Google have the money to be able to make the investments to have these really sophisticated tools. We also have to be careful to think about the startups that don't have that money and to be careful when we are imposing burdens to make sure that they are not going to be felt disproportionately by small Internet companies.

Mr. COLLINS. And I appreciate that because that is a concern.

Ms. Oyama, we have talked before, and I am glad you are here, and these are interesting issues. But in a follow-up to that discussion, again concerned about the smaller creator in this, you mentioned just a few moments ago that YouTube was once a small startup; Google was as well. Now it has grown to the point where my folks in northeast Georgia have the world literally at their fingertips as far as access not only to your platform but others.

Because of your success, we need your continued help with the Internet ecosystem. The small creator needs your help, and I don't want Congress to have to legislate. It has been talked about that this is something that we can work on. I want the industry to be able to use voluntary agreements to effectively fight online piracy, and you guys are doing a pretty good job at that. But I am afraid the volunteer agreements may not be taking into account the quieter voices of some of the smaller creators.

Is there anything that Google can do to help navigate Section 512? And I have a follow-up to that, as well.

Ms. OYAMA. Sure. I actually really very much agree with what Professor Bridy said. So making this process as simple and automated and low cost as possible for everyone I think is a place where automation can play a big role, so the web forms that we have across our products.

The second piece would be there is actually a very thriving vendor market in this space, so people that are becoming very specialized in sending these notices. So no one is touching keyboards. It is automated on one side, it is automated on the other side, and many different people can use those services. Those folks that have specialties in this area are getting smarter and faster about it because it is their expertise.

So if we can also bring them into the conversation, if they have tips and tools about how to find piracy and how to quickly send so it is quickly removed.

Mr. COLLINS. And very quickly, most of your requests are taken down within a matter of hours, but there is a small percentage that do not get taken down quickly, and one of the reasons given is you need additional information. While we are talking about this, what is the additional information? And if we are looking at making changes here, how could we incorporate that into the discussion here? Why is there an additional information lag?

Ms. OYAMA. I think the web forms have a pretty simple place to fill those out. So if they are rejected because of a lack of information, it would be a deficiency that someone hasn't filled in the basic requirements of the form. So one example could be if you were unclear about who was the owner of the copyright.

So the notice and takedown regime I think rightly, as Congress set it up, gives rights holders, the creators, the owners of the work the ability to send, but you wouldn't want somebody else in the public saying what to do with Ms. Schneider's work.

So if it is not clear, you are not saying you are the authorized person——

Mr. COLLINS. And we are just trying to figure out how can we help make it clear to say this is what you need to do. But I appreciate it.

Thank you, panel.

Mr. Chairman, I yield back, Earl Scruggs and everything.

Mr. COBLE. I want to say to the gentleman from Georgia, thank you for that intro.

And for the benefit of the uninformed, the late Earl Scruggs, the late North Carolinian Earl Scruggs was generally recognized as the world's premier five-string banjoist.

Thank you again, sir.

The gentleman from New York.

Mr. JEFFRIES. Thank you, Mr. Chairman.

Let me thank the witnesses for what I think has been a very informative discussion.

Let me begin with Professor Bridy. The Supreme Court in the 1975 decision—I believe it was written by Potter Stewart—*20th Century Music Corporation v. Akin*, made the statement, "The immediate effect of our copyright law is to secure a fair return for an author's creative labor. But the ultimate aim by this incentive is to stimulate artistic creativity for the general good," a statement made by the Supreme Court about the underpinnings of our copyright law.

Would you agree with the sentiment that was expressed by the Court in this opinion?

Ms. BRIDY. I do very much agree with that. I think that it is very important to secure to creators a return on their investment so that they are incentivized to create more creative content for the public, but that ultimately the system is designed to deliver creative works to the public. So I very much agree with that statement, and I think that the DMCA has really worked a good balance to try to help that policy objective to thrive in the digital environment.

Mr. JEFFRIES. Now, I agree with your observation that the DMCA should be or is correctly about promoting a balance between sound copyright policy on the one hand and sound innovation policy on the other. And in the context of sound innovation policy, is it fair to say that a robust safe harbor provision is important to allowing for innovation to continue to flourish in the digital age?

Ms. BRIDY. I think it is crucial. I think there is no question.

Mr. JEFFRIES. Now, as it relates to the applicability of the safe harbor provision to Internet companies, it is my understanding that if there is either actual knowledge or red-flag knowledge of in-

fringement activity, then that safe harbor provision is no longer applicable; correct?

Ms. BRIDY. That is right. It puts them outside the safe harbor.

Mr. JEFFRIES. Now, in the context of how courts have defined red-flag knowledge, could you provide for us some clarity as to what the current state of the law is in this area?

Ms. BRIDY. Sure. I think we are going to get some more guidance in not very long from the Second Circuit on this issue because the *Viacom v. YouTube* case is on appeal for the second time in the Second Circuit, and one of the issues that is live before the Circuit now is what the interaction is between red-flag knowledge and this doctrine of willful blindness about which Professor O'Connor spoke earlier.

So I think that most of the courts that have decided this issue have said that red-flag knowledge is knowledge of facts or circumstances from which infringing activity is apparent and that the knowledge in question can't just be generalized knowledge. It has to be red-flag knowledge of specific instances of infringement on a service provider's system.

Mr. JEFFRIES. Thanks.

Now, Professor O'Connor, in your view, have the courts provided either sufficient guidance as it relates to red-flag knowledge? And, as they have defined this area, has it been sufficiently robust to make this particular provision meaningful?

Mr. O'CONNOR. Thank you, Representative Jeffries. Respectfully, I don't think they have adequately taken care of the doctrine. I think that, as Professor Bridy is saying, they really are limiting it. Well, she might not be saying that, but to where you have actual knowledge of that particular work. So it gets narrowed and narrowed, so that even if you have a sense that there is lots of infringement going on, you can still essentially turn a blind eye to it, and I don't think that was the intent.

So I do again suggest respectfully that Congress could consider setting the policy on what willful blindness should be. If you are aware there is infringement going on on your site, you should take some steps to mitigate it.

Mr. JEFFRIES. Now, I would note that in other areas of the law, you have a commonly understood principle of either actual knowledge or constructive knowledge. The term "constructive knowledge" doesn't appear in the DMCA, but presumably that is part of what Congress had intended in terms of bringing this particular provision to life.

But, Ms. Oyama, I would also note that perhaps there is a reasonable argument that the Internet context is different. In the fraud instance, for instance, constructive knowledge requires a duty of inquiry which it appears the DMCA explicitly did not impose in this particular instance.

What are your views as it relates to whether red-flag knowledge should be more broadly defined?

Ms. OYAMA. I think, actually, the Internet context makes the requirement of knowledge of specific infringing acts even more important because of the diversity and the ecosystem and the different ways that creators are engaging with content.

So just because—imagine we were even able to say this is a song and this is all the places that it appears. Artists have very different standards on where they want it to appear, who they are authorizing, who is not allowed, who is allowed, and so that is why we need that cooperative process where they specifically tell us this one is okay, this one is not okay, this one I didn't know about but actually that is really cool, that one can stay up.

I think you want to make sure that we are not giving the wrong incentives to online services and platforms to build and innovate in this space. So if you narrow the safe harbors and you make it more risky for providers to be innovating in this space or building on their own above the law, filtering and monitoring and things like Content ID, you are going to make everybody very fearful that they are going to hit up against this legal liability. So I think creating a very clear and certain platform that then allows people to experiment and build better systems so that all of the businesses can be licensing and earning revenue from the content is the right direction to go.

You don't want to inject a lot of fear and confusion into the ecosystem, especially with small companies that are trying to get investment. They don't want to get sued out of existence. If you start to impute more things of you might be taking actions and this will show you are willfully blind, no one understands what those standards are. They are very vague. That is going to be the wrong incentive, because they are not going to be trying to fix these problems voluntarily.

Mr. JEFFRIES. Mr. Chair, if I could just ask one brief follow-up question.

At the beginning of my remarks I referenced the Supreme Court decision that notice and principles, laws that can be boiled down to fair return and stimulating artistic creativity as underpinnings of our copyright law. Would you agree that those still remain, even in the Internet context?

Ms. OYAMA. Absolutely.

Mr. JEFFRIES. The value of the innovation economy is a strong thing for us to consider?

Ms. OYAMA. Yes. I think incentivizing creativity is the place that we should all be looking toward and kind of working backwards from in terms of policies that we would support. It is an exciting time. There are more creators that are able to gain access to the tools of creation, to distribution, and to monetization. These industries are changing, but I think that is an exciting thing. There is more creativity out there than ever before.

Mr. JEFFRIES. Thank you, Mr. Chair.

Mr. MARINO [presiding]. You are welcome.

The Chair recognizes the Congressman from Texas, Judge Poe.

Mr. POE. I thank the Chairman.

Thank you all for being here.

As a former judge, I don't like stealing, sneaking around and taking somebody else's property. It is just bad, especially car thieves. My Jeep was stolen, and I was mad until they found the outlaw who stole it. But that is what we are dealing with in this whole thing, Internet thievery, piracy, if you will. It is a little different than most crimes in that generally in criminal situations you have

law enforcement involved. Here, we are trying to solve this problem through the private sector. I think that is the biggest difference. And hopefully we can move down the road so people quit stealing from Ms. Schneider and Willie Nelson and everybody else.

I have some questions for all of you. I will just see how far I can go before he gavels me.

I want to thank Ms. Oyama and Google for what you have done on Internet trafficking issues and what you have done on the sites and helping stop this scourge, especially of child trafficking. Google and others are to be commended for this because it is just dastardly, and I hope we can solve that issue and catch those folks.

Going to a specific thing while we are here, apparently we have all been on our iPhones looking up things on the Internet while this has been going on. I preferred to go to "House of Cards" to see, fantasy House of Cards. How does Google rank people who are—I think I am a typical person that uses the Internet. You go to one of the first three sites, you don't even have to go to the second page, and it seems to me like the first, maybe the first one was valid, but the second two I was kind of suspicious.

Is there a way you can do this with your algorithms to make sure that the bad guys aren't at the top of the page when you look up House of Cards?

Ms. OYAMA. Yes. I think the system that Congress set in place, the notice and takedown system, is extremely well suited for that, because as soon as we are alerted, link 2 and 3 were bad, those are gone. So our average turnaround time is——

Mr. POE. How did they get to be 2 and 3 to begin with? That is my question.

Ms. OYAMA. Well, I think "House of Cards" is a great example. It feeds into the conversation we were talking about, what types of results are showing up. So if you Google "House of Cards," take a look at what is there, it is going to be legitimate stuff. It is going to be the show's website and hopefully the knowledge panel and things about the actors.

Just in terms of kind of feeding back into the Search Trends conversation——

Mr. POE. Just a second. Let me interrupt, because you have already lost me. I pull up "House of Cards," I think I see the valid "House of Cards," but I think I see some thievery going on, like the 2nd and 3rd, maybe the 4th one. How does that happen? Is there a way to prevent that from ever getting to be in those places without having to take them down? That is my question.

Ms. OYAMA. You could attack the people that are putting that up at their source. So sometimes it is a mistake, and I think the notice and takedown process is a good place there.

Mr. POE. Okay. I am a thief. I am stealing "House of Cards." How do I get it to be number 2 when you pull up "House of Cards?" That is my question.

Ms. OYAMA. It is not number 2.

Mr. POE. Okay, 3, 4, right up near the top.

Ms. OYAMA. It is not near the top for "House of Cards."

Mr. POE. Those are all legitimate sites.

Ms. OYAMA. They are going to be legitimate results, and "House of Cards" is something like 121 times more popular than "Watch

House of Cards." So my point is the users are searching for "House of Cards." Those are the types of shows they look for, and then you can look in Google search results. Those are legitimate, clean sites because they are popular and we have done a lot of strong work there.

If it is a really bad actor, so if it is a company that is dedicated to spreading this kind of content and that is what has appeared, there is a role for intermediaries, and we are always working on building better and faster tools so that those will be removed. All we need to know is know that there is a problem, there is a link, we will take that out very quickly, 6 hours or less. You don't have to go to a court. It is a very special power.

But if there is really a rogue actor out there that is determined to just keep resurfacing these, we have to figure out how to also direct our strategy to the source of the problem so that all of the service providers aren't in the same situation as the rights holders. We are all here together trying to scrub this stuff out. You have to disincentivize them and strike their business model or use civil law enforcement.

Mr. POE. I am going to reclaim my time. I have two more questions.

Seventy-three thousand takedowns in 2 years; is that right?

Ms. OYAMA. Just out of the advertising system. Total, it is about 230 million last year.

Mr. POE. Okay. How much does that cost? How much does that cost? Make it so I can understand it.

Ms. OYAMA. It is pretty much unquantifiable because we have hundreds of folks that work on it. We have invested tens of millions of dollars into these systems. It is a huge burden.

Mr. POE. So you don't know.

Ms. OYAMA. A total number, no. It is lots of people and lots of——

Mr. POE. Okay. Take 6 hours to take down one site. How many people do you have reviewing those sites to take them down within 6 hours?

Ms. OYAMA. That is a great question. So for the most part at this point, because of the engineering effort that we have invested in, the tools, the bulk submission tools, trusted users, where we realize 95 percent of the requests that we were getting are actually from a fairly limited number, like 50 major rights holders, we have developed faster tools to do that better.

Across the company we have hundreds of people that work on these things, from engineering to legal, developing our policies, making them really clear. We prohibit infringement on our products. We don't want that. We have the same incentive as the content industry and the rights holders in that we are building businesses like Google Play and YouTube that are licensed. They are licensed with the studios, the labels. Independent creators can use these. We share revenue if creators are getting revenue. No one is making any money if somebody clicks on something in search and they are going to a bad place. So we are all losing money there.

Mr. POE. You don't know how many people, just hundreds of people?

Ms. OYAMA. Hundreds of folks, yes.

Mr. POE. Okay. Well, I hope you all can figure out a way to solve the problem without really getting a whole lot of government involved in this. Sometimes the government makes it worse, not better, no examples to be used. So I understand the problems and I hope we can figure out a way to solve this so people like Ms. Schneider stay in business and the thieves quit stealing.

And I will yield back to the Chairman, who has let me go over. I appreciate it. Thank you.

Mr. MARINO. Thank you.

The Chair now recognizes the gentleman from Rhode Island, Congressman Cicilline.

Mr. CICILLINE. Thank you, Mr. Chairman, and thank you to the witnesses.

I think that protecting the creative products of artists and creators and the long-term success of the Internet and technology are more closely aligned than maybe we all realize. So navigating through these issues I think is particularly important. I am new to this Committee, so this hearing was very useful to me.

But one thing I wondered is, in the very creation of Section 512, I mean, I have seen in the past safe harbor provisions that are created often after an actor is required to try to do something and has tried in good faith but has been unsuccessful, and so they are offered safe harbor. Section 512 doesn't require that at all.

So I guess one remedy would be to add a section that says the service provider has engaged in a good-faith or reasonable effort to prevent infringement of copyright. I think the reason that that was included—and I wasn't here—was we wanted to protect the certainty and the growth of the Internet and not put that burden on the service provider, and I think for all good reasons.

But in light of what we have seen over the last several hours of testimony and what we know, it seems as if this kind of re-posting problem has made the notice and takedown provision a bit of a mockery. While there has been a lot of conversation about how we have improved it to make it easier to file it and quicker to respond to it, if you can just re-post it instantaneously, that is all well and good but it is not really having the effect we would want.

So I suppose one other remedy we could provide is in this Subsection C where it says "obtaining such knowledge or awareness, acts expeditiously to remove or disable access to the material," and we could add "and prevent its re-posting." So that is another mechanism that would seem to me an obvious solution.

I recognize that it is much better if the industry figures this out, and I hear that from artists, and I hear that from creators, and I hear that obviously from technology entrepreneurs. But it does seem to me that if the technology exists when notice is provided that this is a copyright infringement, that we ought to have the ability not only to have it taken down but to prevent it from reoccurring. That doesn't solve all the problems, but I think it is what Professor O'Connor spoke about, Mr. Doda spoke about. But isn't that the responsibility of the industry to figure out how you, as Judge Poe said, not put all of this burden on the victim of the crime? And isn't it at least saying once you go through the burden of identifying it, notifying us, we will at least honor your request by not requiring you to do that non-stop all day?

I don't know who wants to respond to that, but it seems to me like a pretty obvious solution.

Ms. SCHNEIDER. May I again make these points? Okay, I think what could really solve and save companies like YouTube a lot of takedown is just to have for the person uploading some educational steps that they go through, not just clicking one box but asking them certain—are you sure? Is this something you wrote? Okay, if not, et cetera. Who knows? I mean, that has to be worked out.

Mr. CICILLINE. Right.

Ms. SCHNEIDER. And then the streamlined, I applaud definitely the streamlined takedown. But, you know, the other thing is the Content ID, stopping it before it is there, like they do. I mean, if you didn't have Content ID for those big companies, I can't even imagine how big your takedown numbers would be. They would be insane. So imagine if Content ID worked for everybody and if we all then could find other ways to either stop or monetize.

Mr. CICILLINE. Thanks.

Mr. Doda?

Mr. DODA. Thank you, Congressman. I think hand in hand with what you identified is that many times the re-uploaders are repeat infringers. So another way that we can attack the problem is to have strengthened repeat infringer policies, clearer policies, clearer parameters around tracking repeat infringers and ensuring that those actors are kept out, because they contribute substantially to the re-upload problem.

Mr. CICILLINE. Professor O'Connor?

Mr. O'CONNOR. I want to follow up on Ms. Schneider's comment and make it clear, too, that one of the educations that could be done would be directing people who want to upload things to copyright clearance centers, licenses. There are a number of mechanisms that, as Representative Farenthold was curious about before, is it hard? Do they have to contact Ms. Schneider directly? There are many mechanisms to do this legally to put up the content you want.

Mr. CICILLINE. Ms. Oyama, I just want to say thank you for all the work that Google has done in this area. I know that there is—while you are not the only one, there are obviously thousands and thousands of providers and search engines, but certainly the leadership of Google matters a lot, and I hope this is an issue that you will take on and lead to really figure out how we prevent this sort of re-posting and protect the creative products of artists and musicians and writers in a more effective way, and this sort of re-posting problem, which has really been identified as a serious one, I hope Google will help be part of the leadership that solves this problem.

Ms. OYAMA. Thank you. I think the education points you made are really well taken. It is something we worked really hard on. We have a YouTube Copyright School. If you get a strike against you, we send you to Copyright School to kind of learn some of the basics and earn your strike off. We have a very strong repeat infringer policy where if you are a repeat infringer you get ejected.

I just do want to flag, I think some of the language that you read in the beginning, I can understand why that would sound attractive to impose on all service providers this requirement to prevent

re-posting, but those service providers, they don't know if it is infringing or not if they don't hear from the rights holder. So that kind of duty, if it was enacted into legislation, it would require a service provider who has linking or comments or tweets on their system to somehow, before that user is able to add a link and a comment, somehow filter that out, know who was the rights holder, who was authorized. It would really chill the same services that are sending hundreds of thousands and hundreds of millions of dollars back into the content industry.

So I just think we need to be careful when we are thinking about what those types of words would do on innovation.

Mr. CICILLINE. No, I think that is exactly right, which is why I think all of us are very hopeful that the industry will come together with all the stakeholders and develop good standards and good, responsible actions so that we don't attempt to try to solve this problem, because I think you are right, we may do more harm than good in the end.

I thank all the witnesses and yield back.

Mr. MARINO. The Chair recognizes the gentle lady from California, Congresswoman Lofgren.

Ms. LOFGREN. Thank you very much, Mr. Chairman. I think this has been an instructive morning. I am thinking back to when we crafted the DMCA, and clearly, without safe harbor notice and takedown, there would not be an Internet. It wouldn't exist. So I think it is important that we recognize that and, as with the doctors, first do no harm.

Thinking about what Google has done with YouTube, it is really impressive to spend that amount of money, $60 million, 50,000 hours of engineering time, so that you can actually give a tool to artists to protect themselves. I want to commend you for that. Not all the artists know about that. So there may be some efforts that you might want to make to further publicize the opportunity, because sometimes I meet artists and they don't know.

But the other thing that I think is interesting is that you own the data. I mean, you own YouTube, and you can take the fingerprint, and you can match it against your files, and that is entirely different than search and information that is out there. So as I am thinking about Content ID, I mean, it is a trivial matter to make a minor change to encryption or something else on re-posting. There is no way technologically that you could use the Content ID system to automatically scan on re-posting, is there, Ms. Oyama?

Ms. OYAMA. In a context like search, no, because the basic differences between the hosted platforms and something like search, the hosted platforms, we have two sets of data. So we have the reference files from the rights holders.

Ms. LOFGREN. Right.

Ms. OYAMA. We have the user-uploaded content. For search, we don't have either of those. We definitely don't have the content of every website. We might have some text. We might be able to copy text on the pages, but we don't have the embedded videos or other content. So there is no match on that side.

And then without the cooperation of the rights holders, we wouldn't know what the rights are in this setting.

Ms. LOFGREN. But let's say you get a notice and takedown and you have the technological information on the file. You could just re-encrypt and upload and that would defeat the information that you were provided. Isn't that correct?

Ms. OYAMA. Yes, and that is why on the notice and takedown system it is important to continue to work on how to make that easier, more simple, faster, better for everyone. But that cooperative, kind of shared risk/responsibility piece, it is a delicate balance and incorporates a lot of different equities and has been the foundation for the Internet economy.

Ms. LOFGREN. Well, I remember when we went into the SOPA battle. One of the things that it is important for us to keep in mind is to not suggest things that are technologically impossible and that might actually destroy the inner workings of the Internet, some of which have been discussed here today.

I want to talk also about Google is a big company with lots of money. You spend a lot of money to deal with piracy. I thank you for that. I think you are probably going to do more. I thank you for that, as well.

On the other hand, WordPress has 48 million websites. I think, according to your testimony, in the month of February, 740,000——

Mr. SIEMINSKI. New sites.

Ms. LOFGREN [continuing]. New sites were established. The idea that you could provide the same kind of scrutiny—I mean, each post, it could be part of a poem, it could be a link to—I mean, how would you possibly accomplish what YouTube has done with millions and millions of people who are also creators? They are creating websites, commentaries, poems and the like. How would you address that?

Mr. SIEMINSKI. That is a great question. Thank you. I think, number one, it is important to point out that YouTube, as you said, did great work in developing Content ID with $60 million and with hundreds of engineers, which is many times the size of our entire company. So what they can do technologically I think is very different than what we can do technologically, and there are thousands of companies that are much smaller than us that are also subject to the DMCA.

But to your second point, I think that is a very important one, because even if we could develop technology to identify a file as copyrighted or what-have-you, that doesn't answer the question of fair use or other rights that someone may have to post that to your website. You can't answer that question with technology.

Ms. LOFGREN. Let me just do a final question because there was testimony both from Ms. Oyama and also you, sir, about abuse of notice and takedown. When we wrote the DMCA, that was an issue that I talked about publicly because if you are the ISP and you get a notice and takedown, you don't have an incentive to stand up for the First Amendment rights of the people whose stuff you are taking down. Your entire incentive is just to take it down and not cause a problem. I saw from your testimony that you have seen cases where, for example, someone criticized a poem, and the poet who didn't like the criticism did a notice and takedown which was improper.

What percentage are you seeing of those kind of improper uses, both Ms. Oyama and yourself, and do you think that some kind of—I mean, there is a disincentive that is financial for someone who flouts the notice and takedown. Should there be the same kind of financial disincentive for somebody who blatantly abuses it from a fair use point of view?

Mr. SIEMINSKI. Yes. I think the answer is yes to your second question. As I mentioned, there is statutory damages for copyright infringement, but there is no penalty at all for the other side of that equation. So, yes, I think there should be those penalties.

We do see—it is not by any means the majority of the notices we get. It is a small handful. But even a little bit of censorship isn't okay in our opinion, and I think that relative to the kind of whack-a-mole problem or the other large-scale, the other types of issues we have been hearing about on the panel today, we don't see any of that on our platform because we are not a filing-sharing platform. We are like most other sites on the Internet where we are providing a platform for people to post original content, and in that context the problem that we see is these abusive notices. It is not the majority of them, but it is the majority of the issues that we see.

Ms. LOFGREN. Thank you, Mr. Chairman.

Mr. MARINO. The Chair recognizes the gentleman from California, Congressman Issa.

Mr. ISSA. Thank you, Mr. Chairman. This is an important hearing, and sometimes these hearings are d?j? vu all over again. We have been here before, and I am sure we are going to be here again. But let me go through a couple of questions that I think will help make at least this moment in time accurate to the status quo.

Professor O'Connor, happy St. Patrick's Day.

Mr. O'CONNOR. Thank you.

Mr. ISSA. But more importantly, you are a law professor. I assume you went through law school some years ago?

Mr. O'CONNOR. Yes.

Mr. ISSA. Did you ever get a Xerox copy of something that was presented to you as a student?

Mr. O'CONNOR. You mean from my professor?

Mr. ISSA. Yes, a photocopy at a class.

Mr. O'CONNOR. Yes.

Mr. ISSA. And if he gave it to everybody in the class and it was a substantial portion of a copyrighted material, isn't that a copyright violation?

Mr. O'CONNOR. Well, there are interesting questions about classroom use and fair use, and I have to be quite honest that I don't think I ever got something that was the majority of, say, a book. It was usually just a few pages or an article, so I don't know that, especially my being a law student then, that I had the ability to say whether it was classroom fair use or not.

Mr. ISSA. Okay. But you went through law school or to undergraduate school in the 1980's or 1990's? When was it?

Mr. O'CONNOR. Eighties.

Mr. ISSA. Eighties. So at that time, there was no Google, right?

Mr. O'CONNOR. Correct.

Mr. ISSA. Well, let's just bring ourselves up to date a little bit.

Ms. Oyama, if today in the online world the equivalent is occurring—in other words, somebody is using it in an online class, they are posting it on a website, et cetera—and let's just say that the professor here now wants to find out if somebody is doing the right or wrong thing, isn't to a great extent what Google provides to the copyright community a virtually unlimited instantaneous ability to find copyright or potential copyright violations or abuses in the open web?

Ms. OYAMA. I think that is right. Actually, there is this vibrant market that is growing of vendors that specialize in this. Sometimes I think they use these same tools to find where the problem is so they can then go on and attack them.

Mr. ISSA. Well, Ms. Schneider, obviously as a composer, I would sort of do the same thing, a composer, writer, producer. You are much younger, of course, than the professor, but three or four decades ago you wouldn't have known that somebody was ripping off your music unless somebody happened to report because they could photograph it, photocopy it. I can remember that the Catholic Church and other churches finally got called on using sheet music by simply mimeographing it and handing it out, but for generations they had not been held accountable to pay, and it wasn't fair use but they would have implied that giving everyone in the choir a copy of somebody's sheet music was okay. Do you remember hearing about that?

Ms. SCHNEIDER. Do I remember hearing about that?

Mr. ISSA. Yes.

Ms. SCHNEIDER. Yes.

Mr. ISSA. So a vast amount of this was going on, and for the most part it was impossible to track. Do you agree that today one of the disadvantages that leads to takedown is that it is fairly inexpensive for people to put things on the Internet? But isn't one of the advantages the fact that you now can quickly, you or a service can quickly find infringers on the Internet where you couldn't have found them, they were just copying for church on Sunday in Tuscaloosa?

Ms. SCHNEIDER. You know, the digital age opened it up to such an expansive point. And I would like to point out that you were saying three or four decades ago. I mean, I don't know, maybe we were talking about cassettes at a certain point, which weren't very good quality, and then——

Mr. ISSA. I want you to know I was selling 8-tracks in college, so please do not lecture me on how bad they were. [Laughter.]

But they were great in trucks when you couldn't hear anyway.

But the point is you are arguing that somehow this new opportunity, which is, of course, creating a huge amount of sales—the majority of songs soon will, if they are not already, be sold online. Aren't we dealing with a balance of takedown allows for somebody to be essentially tried and convicted by an accuser? That is the current law, that you accuse. I am the copyright holder, I want to take him down. You get an immediate adjudication, effectively, and takedown, and yet I am being asked periodically to do more. SOPA and PIPA obviously was a discussion about doing more, having the Justice Department go out and criminalize this and do the work for copyright owners and so on.

Isn't it today, unlike 10 years ago, 20 years ago, 30 years ago, the fact that you now can find and instantaneously, even automated, find and potentially accuse infringers and cause takedown notice? Isn't that the status quo? I just want to establish not right or wrong, not whether there could be more done, but isn't that really the status quo, that when the professor was in school, nobody knew whether his professor was making copies under fair use or not? It just wasn't available. The music, those 8-tracks, the bootleg 8-track industry, nobody knew how many were sold and whether a truck stop had legal or not legal.

You know, or at least have the ability to know, don't you?

Ms. SCHNEIDER. I can tell you that—I am just going to take a little step back.

Mr. ISSA. But the only thing I want you to do is——

Ms. SCHNEIDER. The answer is no, it is not good, because there is so much of my music out there now compared to 8-track cassettes.

Mr. ISSA. Ma'am, I only wanted you to answer the question, and then you can talk as long as the Chairman lets you.

Ms. SCHNEIDER. Okay.

Mr. ISSA. Isn't it true you now can find that out, where you couldn't have when the 8-track was being sold at Pop's Truck Stop 30 or 40 years ago?

Ms. SCHNEIDER. Of course that is true. I can find it now.

Mr. ISSA. Okay.

Ms. SCHNEIDER. But the quantity that is out there is just so vast. Now, I will tell you, in 2003 when this thing started, I happened to be—I consider myself the most well-equipped musician I know in the age of the Internet because I just happened to get on-board as the first artist with this company called ArtistShare. The whole idea was that we are going to connect directly with our fans. I am going to make a record, fan funding, and I am going to share my process.

So I am a very insulated artist compared to most artists because I have established these questions. But even amidst this, with all these sites, there is so much of my content out there. The other night, in 20 minutes, I found 11 sites with just endless songs of mine that popped up again and again and again.

So the ease and the scope at which people can do things now, it is impossible to rein it in, and it is so financially damaging to us. One point I want to make about this is that the vast, vast majority of artists now are paying for their own records. In the age of recording companies, the good part of recording companies is that when they invest, they took on the financial risk of a record. Now we are taking on the financial risk. All the record companies are done, and we are trying to pay back our loans, our mortgages on our houses, whatever we are doing to make these records in an age when everybody is stealing. It is really—I can't tell you how impossible it is to negotiate this.

Something has to change, and I am asking, please, Congress, do something to change this.

Mr. ISSA. Mr. Chairman, if I could ask Ms. Oyama if she had anything to comment on, on the ability, the speed of takedown and the automation, if she has an answer to that.

Mr. MARINO. The Chair recognizes her for 30 seconds.

Ms. OYAMA. I think we are seeing the volumes of takedowns going up because the World Wide Web is expanding, but the takedowns are going down. The turn-around times are going down, and that is the place where you want to incentivize more folks to do the right thing when they can develop automation and things like that.

Mr. ISSA. Thank you, Mr. Chairman.

Mr. MARINO. The Chair now recognizes the gentle lady from Texas, Congresswoman Lee.

Ms. JACKSON LEE. Again, I would like to as well acknowledge this hearing as a very important hearing.

Ms. Schneider, let me thank you for framing a very large issue for not only yourself but so many talented artists. Those of us who have served on this Committee for a period of time, we can recollect traveling to places such as Italy and Spain and China with then-Chairman Hyde on the issue of the question of intellectual property, and at that time it was in films and music.

So I think this panel is very good because we have an appropriate balance and we have contributors to a solution to what you have just assessed. I want to find a solution.

We are blessed to be in a new age, and I think I have heard quite a bit of compliments for Google. I will add mine because we need the continued technological inquiry to be able to keep moving and to find ways to address the respect for intellectual property, as well as for the new technology that we have.

And that is why I want to go to Professor O'Connor and have him lay out for us, in Stage 2 of your first proposed solution that was in your testimony, you would have Congress add an affirmative duty to monitor for and remove re-posted works. Can you expound on that solution for a moment?

I want to come back to Ms. Oyama again for a very exciting—I would just like to hear how it would work. The monetizing thing is a very exciting concept. Will it grow? Will you look for new technology to make it even more refined and more accessible? Because as I listen to the sophistication of Ms. Schneider, she is indicating that there may be rooms full of individuals that are not that sophisticated.

But, Professor O'Connor, if I could.

And I have a question for you, Mr. Sieminski, as well.

Yes, Professor O'Connor?

Mr. O'CONNOR. Thank you, Representative Jackson Lee. I appreciate this opportunity. I want to point out a couple of things. One is that we live in a digital world now, and so the content can be reproduced so much more quickly that simple mimeographs, as Representative Issa was talking about, really is not the world we live in now. So the reason why I want to have the red-flag provisions strengthened is because I believe that for the things that are the entire work and they are just being flagrantly re-posted, and because we do have Content ID, but as I mentioned before, it picked up even my song when I was playing a small snippet of a ZZ Top song, that is impressive technology.

So I believe that we can do this. Again, let's just target the flagrantly infringing material and try to get that taken down, lower the volume of takedown notices.

Ms. JACKSON LEE. And who are you going against when you do that? Because we have to be sympathetic to the providers versus those who have content. Where is that going to be focused?

Mr. O'CONNOR. So I think everyone would agree that we really want to get the people who are posting in the first place. But at the same time, why I focus on strengthening willful blindness is because we can't have this culture of copyright contempt where even startups are saying, look, I guess this is the game. The game is that I have to just turn a blind eye and let everyone post whatever they will. I can't monitor or I will get myself into trouble. I think we have set up the incentives exactly backwards.

Ms. JACKSON LEE. So I think what we would want is a really intense discussion listening from both sides of that.

Ms. Oyama, you have made—well, let me just say, you all have looked for answers, as we understand it. So how far can we take that monetized approach that you are using, which I think is very interesting? I like the billion-dollar number. I like the partnership. How far can we take that?

Ms. OYAMA. I think the sky is the limit. We are seeing a really big uptick in the number of consumers globally, so not just in U.S. consumers but globally that are trending toward mobile and other devices. So as markets expand, as there are more users, more consumers of music, movies, other types of content, the question I think we are all grappling with is how do you direct legitimate content to those users. So one of the things that we have really always believed is the best way to fight piracy is to increase the availability of legitimate offerings.

So there are data that show in markets where Spotify has entered the market, rates of piracy have dropped like 25 percent. So those are the kind of things that we want to harness, how do we figure out our services. But there are also great innovations in the TV and film space that are getting into the home entertainment as well. How do we encourage rights holders to be comfortable getting their content into the digital space? How do we make consumers aware of it in compelling ways? And how do we all grow the pieces together?

I think the one, just bringing it back to the safe harbors, these services are providing new and really tremendous opportunities for the industries. Their revenue continues to grow, as well as creators who can now access these types of tools that they wouldn't have been able to independently. They can now do that on their own at lower cost.

So we have to think broadly about what kind of policies stimulate more services like that, more license services that will be paying rights holders, that will be feeding revenue back to the content industry. The safe harbors there, they have been critical for every U.S. Internet company that exists. And in other countries, places like Europe, they don't have the startup economy that we have. Southeast Asia, same thing. Silicon Valley is a precious part of the U.S. economy because of Congress' foresight in the DMCA.

So I would just urge folks to be very careful when we think about whether or not we would want to start tinkering with that very careful balance.

Ms. JACKSON LEE. Mr. Sieminski, if I might, you indicated that your company received in the neighborhood of 825 takedown notices last month. How many counter-notices did you receive as a result of that?

Mr. SIEMINSKI. We received four last month on those 825.

Ms. JACKSON LEE. How do you assess that?

Mr. SIEMINSKI. I think——

Ms. JACKSON LEE. Because you are here to solve a problem.

Mr. SIEMINSKI. Yes. I think the counter-notice system has many of the same problems that we see with the notice system. I think the counter-notice procedures are very difficult to navigate, especially for the average user, and I think a big problem with it is even if you receive a notice for content that you legally have the right to post, if a website takes that down, and even if you go through the counter-notice process, there is a 10-day period when that content is down for good under the statute.

So the notice process provides for content to be taken down for at least 10 days, and then there is a complicated process for counter-noticing that most people can't navigate.

Ms. JACKSON LEE. I have just a follow-up question, Mr. Chairman, for Professor O'Connor, if I might, and I will conclude with Ms. Schneider on a yes-or-no answer.

I wanted Mr. Sieminski to speak because he indicated that there are no damages available for those who misuse the notice process. While there may not be statutory language in 512(c), the statute does provide for damages and fees if someone is found to have abused the process.

Mr. O'CONNOR. Courts can craft remedies, yes.

Ms. JACKSON LEE. So is there a damage process, or do we need to make that more clear? Or do you believe there should be one, or believe there is one?

Mr. O'CONNOR. I think it is not clear enough, and I think we should make sure that we can take care of the abuses if they are happening, although they should be happening on a relatively small scale.

Ms. JACKSON LEE. I just want to read this and conclude with Ms. Schneider. I think it is important. You may have said this, Ms. Oyama, but this sort of crafts the difficulty that we are in.

This is really, really a good one in terms of the experience of notice and takedown. A physician claiming a copyright in his signature sent a takedown notice aimed at a document related to the suspension of his license to practice medicine. So I wanted to leave us on that note because this is in your testimony about takedown notices, that sometimes it can get really off center.

But I want to agree with Ms. Schneider and simply say as you listen here to the testimony around the table, monetize, talking about trying to find a balance, are you seeing that as being helpful to you by looking at a way to balance these issues?

Ms. SCHNEIDER. The takedown notices?

Ms. JACKSON LEE. No, not the takedown notices, just the idea of the utilization of your intellectual property monetized as a technology, looking at clarifying the law. Is that going to be helpful to you?

Ms. SCHNEIDER. No, because it is such small quantities of money for so many views, advertising on Google and various things. I mean, the thing that is frustrating from a musical standpoint is that if you imagined music here with this much volume of money that was coming in, we refer to it now as content, and the content is being used by a number of companies on the Internet to draw people, to draw eyeballs, and the more eyeballs they get, the more data they collect, the higher paying the advertising is.

Ms. JACKSON LEE. So your answer is what? Your final answer is what, to the solution?

Ms. SCHNEIDER. For me, the solution is that DMCA has to have a more robust upload, stay-down means takedown, and there should be a Content ID for every company so that everything is filtered, so that at least I can control what is being illegally uploaded out there.

Ms. JACKSON LEE. Mr. Chairman, thank you for your indulgence and courtesies, and to the Ranking Member as well. I do think there is a call for us to work together.

I yield back.

Mr. MARINO. This concludes this hearing. I want to thank all our witnesses for attending. I want to thank our guests in the gallery for being here.

Without objection, all Members will have 5 legislative days to submit additional written questions for the witnesses or additional materials for the record.

This hearing is now adjourned. Thank you.

[Whereupon, at 12:29 p.m., the Subcommittee was adjourned.]

APPENDIX

Material Submitted for the Hearing Record

What the uploader sees:

Important: By sharing, you confirm that your sounds comply with our Terms of Use and don't infringe anyone else's rights. If in doubt, check our Copyright Information pages and FAQs before uploading.

What the creator sees:

Procedure for Reporting Copyright and other Infringements for Rights Owners in the United States

1. SOUNDCLOUD encourages USER to notify SOUNDCLOUD of any Content that USER believes to be in violation of copyright, trademark, any other intellectual property rights, or any other applicable law, or of any Content that contains undesirable texts or images of, or links or references to, pornography, violence, racism, or content that is otherwise discriminatory or objectionable.
2. If you are a copyright owner or an agent of a copyright owner and believe that any USER Content or other content that has been made available on or through the Website infringes upon your copyrights, you may send a written notice of claimed copyright infringement ("Notice") to our Copyright Agent via email or postal mail with the following information:
    1. a statement that you have identified material on the Website which infringes your copyright or the copyright of a third party on whose behalf you are entitled to act;
    2. a description of the copyrighted work that you claim has been infringed;
    3. a description specifying the material that you claim is infringing and the location of the material on our (including, for example, a URL and/or screen shot);
    4. your full name, telephone number and email address on which you can be contacted;
    5. a statement by you that you have a good faith belief that the disputed use of the material is not authorized by the copyright owner, its agent, or the law;
    6. a statement by you that the information in the Notice is accurate, and under penalty of perjury, that you are authorized to act on behalf of the owner of the exclusive right that is allegedly infringed; and
    7. an electronic or physical signature (which may be a scanned copy) of a person authorized to act on behalf of owner of the work that is allegedly infringed.
3. Counter-Notice. If you believe that the content you uploaded and that was removed (or to which access was disabled) is not infringing, or that you have the authorization from the copyright owner, the copyright owner's agent, or pursuant to the law, to post and use the Content you uploaded on our Website, you may send a counter-notice containing the following information to our Copyright Agent:
    1. Your physical or electronic signature;
    2. Identification of the content that has been removed or to which access has been disabled and the location at which the content appeared before it was removed or disabled;
    3. A statement that you have a good faith belief that the content was removed or disabled as a result of mistake or a misidentification of the content; and
    4. Your name, user name, address, telephone number, and email address.

include a statement that you consent to the jurisdiction of the federal court in Los Angeles, California, and a statement that you will accept service of process from the person who provided notification of the alleged infringement.

Please contact us at copyrightagent@soundcloud.com if you have questions regarding the location of the claimant against your Content.

If a counter-notice is received by the Copyright Agent, SOUNDCLOUD may send a copy of the counter-notice to the original complaining party informing that person that it may replace the removed content or cease disabling it in ten (10) business days. Unless the copyright owner files an action seeking a court order against the content provider, member or user, the removed content may be replaced, or access to it restored, in ten (10) to fourteen (14) business days or more after receipt of the counter-notice, at SOUNDCLOUD's sole discretion.

SOUNDCLOUD's Copyright Agent for notice of claims of copyright infringement can be reached at the following address:

By postal mail:

Copyright Agent SoundCloud Ltd.
Rosenthaler Str. 13
10119 Berlin
Germany

Attention of: William B. Colitre, Esq. c/o Music Reports, Inc.
21122 Erwin Street
Woodland Hills, CA 91376
USA

T: 818 558 1400
F: 818 558 3848

By email: copyrightagent@soundcloud.com.

Please only send infringement notices to the Copyright Agent; any other communications, e.g. feedback, comments, requests for technical support should be sent to SOUNDCLOUD's customer service at http://help.soundcloud.com.

Date: June 30, 2010

"Maria Schneider Orchestra -..." This video is no longer available due to a copyright claim by Maria Schneider.
Sorry about that.

Material submitted by the Honorable Darrell E. Issa, a Representative in Congress from the State of California, and Member, Subcommittee on Courts, Intellectual Property, and the Internet

PUBLIC.RESOURCE.ORG ~ *A Nonprofit Corporation*

Public Works for a Better Government

May 30, 2013

Hon. Philip Gunn
Speaker of the House
Mississippi House of Representatives
PO Box 1018
Jackson, MS 39215

Hon. Jim Hood
Attorney General
State of Mississippi
P.O. Box 220
Jackson, MS 39205

Dear Speaker Gunn and Attorney General Hood:

I am pleased to enclose for your consideration a George Washington USB Thumb Drive containing a scanned version of the Mississippi Code as well as XML-encoded versions of the code. Our purpose in making these statutes available is to promote access to the law by citizens and to promote innovation in ways the statutes are made available so that public servants, members of the bar, citizens, and members of the business community have ready access to the laws that govern them.

Access to the law is a fundamental aspect of our system of democracy, an essential element of due process, equal protection, and access to justice. The Supreme Court of the United States has repeatedly reaffirmed this principle, stating for example in Banks v. Manchester (128 U.S. 244, 1888) that "the authentic exposition and interpretation of the law, which, binding every citizen, is free for publication to all, whether it is a declaration of unwritten law, or an interpretation of a constitution or a statute."

The fact that there is no copyright in the law has been affirmed as a statement of policy by the United States Copyright Office which stated "Edicts of government, such as judicial opinions, administrative rulings, legislative enactments, public ordinances, and similar official legal documents are not copyrightable for reasons of public policy. This applies to such works whether they are Federal, State, or local as well as to those of foreign governments."

I would be pleased to answer any questions you may have and look forward to better access to the law by the citizens of Mississippi.

Sincerely yours,

Carl Malamud
Public.Resource.Org

carl@media.org 1005 GRAVENSTEIN HIGHWAY NORTH, SEBASTOPOL, CALIFORNIA 95472 • PH: (707) 827-7290 • FX: (707) 829-0104

STATE OF MISSISSIPPI

JIM HOOD
ATTORNEY GENERAL

October 7, 2013

Carl Malamud
Public.Resource.Org
1005 Gravenstein Highway North
Sebastopol, CA 95472

CERTIFIED MAIL
RETURN RECEIPT REQUESTED
NO. 7001 1940 0000 3122 2314

Re: Letter of May 30, 2013 Addressed to Hon. Philip Gunn and Hon. Jim Hood

Dear Mr. Malamud:

The Legislature of the State of Mississippi, and specifically the Joint Legislative Committee on Compilation, Revision, and Publication of Legislation ("Committee"), has received your material and correspondence of May 30, 2013 addressed to the Hon. Philip Gunn and the Hon. Jim Hood. The Committee has requested the Office of the Attorney General to respond and to take all appropriate actions. I am intellectual property counsel for and represent the Attorney General and have been specifically requested to respond.

The State of Mississippi appreciates your interest and efforts to provide access to the law for all citizens, including those of Mississippi. Its purpose has been and is always to make the state's statutes available so that the public has the unfettered ability to study, utilize, and access the law at any time.

To that end, the Legislature has for years contractually agreed with LexisNexis, the publisher of the Mississippi Code of 1972 Annotated, as amended, modified, and revised from time to time ("Code"), to have the latter publish an unannotated version of the Code on the publisher's Internet website at no cost to the Committee, the State, or the public. The Code is a compilation of the public statutory laws of the State of Mississippi organized by specific chapters, sections, and titles. Mississippi provides the published unannotated version of its Code through the LexisNexis website and accessible links to the site from the websites of the Mississippi Legislature, the Attorney General, the Mississippi Secretary of State, and the Mississippi Supreme Court, all at no cost to the public.

POST OFFICE BOX 1850 • JACKSON, MISSISSIPPI 39215-1850
TELEPHONE (601) 359-7600 • TELEFAX (601) 359-7774

The Committee is cognizant of U.S. copyright law as it applies to the Code and operates within the guidelines set out within the law and expects all citizens to do the same. The Code includes annotations including, but not limited to, source and reference annotations, editor's notes and amendments, and administrative and judicial decision annotations, all of which are original works of authorship that include synopses, interpretations, and analyses of research references and cross references, Attorney General opinions, and administrative and judicial decisions.

The annotations are created for the Committee contractually by LexisNexis and by others employed with the Mississippi Legislature and/or the Committee. The annotations are produced over time and through significant creative efforts. These annotations are original works of the creators that are entitled to protection under U.S. copyright law. The unannotated version of the Code published by LexisNexis does not include the annotations and original works of authorship created by the publisher and by others. LexisNexis timely provides updates of the unannotated version of the Code on its website. The annotated Code is likewise always available to the public at the State Law Library and any public facility that maintains an updated set of Code volumes.

With respect to publication of the unannotated version of the Code, the Committee subscribes to the 2007 Open Government Working Group's 8 Principles of Open Government Data that promulgate that government data should be complete, primary, timely, accessible, machine processable, and license-free; that access to such data be non-discriminatory; that formats of such data be non-proprietary; and that compliance with such principles be reviewable. The Committee has been and is always available to address any matters relevant to the published unannotated version of the Code.

The published unannotated version of the Code is a complete, current, and official version of the law itself and does not include copyright-protected material which does not comprise the law. The Mississippi Legislature enacts only the law itself, not the annotations, summaries, and analyses. Moreover, it publishes only the law itself in the unannotated version (no cost basis) and publishes both the law itself and the annotations, summaries, and analyses in the annotated version (cost basis). Thus, the Mississippi Code of 1972 Annotated is also a complete, current, and official version of the law of the State and includes the law itself and copyright-protected material. The annotated version of the Code is the product and result of an independent commercial effort by the publisher to (1) copy the state statutes, i.e., the law itself, and (2) compile the law, on a for-profit basis, with additional copyright-protected annotations, summaries, and analyses that belong to the State under U.S. copyright law. Copyright in materials can reside with the State and the copyright to such annotations, summaries, and analyses is owned and will be enforced by the State. Although published with the law, such annotations, summaries, and analyses within the annotated version of the

Code are not the law. As mentioned, absolutely no restriction exists on the use of or access to the current law itself.

The Committee is of the opinion and believes in good faith that the annotated version of the Code involves original works entitled to the rights of copyright protection and has requested the Attorney General, by statute, to take any and all actions necessary to enforce such rights. The contractual agreement between the Committee and LexisNexis, or any publisher, provides the State of Mississippi and the Legislature the practical ability to provide and maintain a quality and accurate Code at a reasonable cost to the taxpayers. The Committee is committed to ensuring full and complete copyright protection of the Code.

The Committee is likewise committed to providing accurate and publicly accessible statutory law and has provided ample assurance that such is and will continue to be timely updated and published. The Committee's position is that the annotated Code that you have copied and published is comprised of copyright-protected material. The Committee therefore requests that you immediately remove the annotated version of the Mississippi Code of 1972 Annotated from any and all of your website(s) and from all sites and all types of written and electronic media over which you have control. The Committee further requests that you respond in writing to me within five (5) days of the receipt of this letter that such action has been taken and include written assurance that the annotated version of the Code will not be published or provided to any individual or entity in any format in the future by you and will not be published on any such website(s) or provided by you through written, electronic, or any type of media whatsoever.

Thank you for your prompt attention to this matter. All correspondence should be directed to me at the Office of the Attorney General via the address shown below.

Sincerely,

Larry A. Schemmel
Special Assistant Attorney General
State of Mississippi

c: Ronny Frith, Co-Counsel, Joint Legislative Code Committee
Bubba Neely, Co-Counsel, Joint Legislative Code Committee
Anders Ganten, Senior Director Government Content Acquisition, LexisNexis
I:\larry\Copyright\MSLegislature\malamud.ltr1

POST OFFICE BOX 1850 • JACKSON, MISSISSIPPI 39215-1850
TELEPHONE (601) 359-7600 • TELEFAX (601) 359-7778

PUBLIC.RESOURCE.ORG ~ *A Nonprofit Corporation*

Open Source America's Operating System
"It's Not Just A Good Idea—It's The Law!"

October 11, 2013

Larry A. Schemmel
Special Assistant Attorney General
Office of the Attorney General
State of Mississippi
Post Office Box 1850
Jackson, Mississippi 39215-1850

Dear Mr. Schemmel:

I am in receipt of your letter of October 7 regarding your request that we "immediately remove the annotated version of the Mississippi Code of 1972 Annotated from any and all ... website(s) and from all sites and all types of written and electronic media." We respectfully decline to comply with this request for the reasons stated herein.

First, let me thank you for thoughtful letter. I especially appreciate your support for the 8 Principles of Open Government Data, which I helped draft with 30 of my colleagues in 2007. If I may take the liberty of paraphrasing your letter, it seems like you are making two main points:

- You state that the State of Mississippi makes the unannotated version of the Code available and that this is complete, current, and official. (Emphasis in the original letter.)
- You state that the annotated version of the Code is also an "official version of the law of the State and includes the law itself and copyright-protected material." (Emphasis in the original letter.)

Let me begin by addressing the question of availability of the unannotated version of the Code via your vendor's web site. As you know, the 8 Principles of Government Data require that access to government data—particularly public domain data such as we both agree includes the unannotated Code—should be license-free and machine processable.

As you will see in Exhibit A, access to the site is initially blocked by a popup which requires the user to agree the Terms and Conditions. Those Terms and Conditions, which are attached in Exhibit B, consists of an extensive license agreement spanning 5 pages of exceedingly technical language in fine print.

Some of the highlights of the agreement include fairly draconian prohibitions against effective use, including a prohibitions against the ability to "copy, modify, reproduce, republish, distribute, display, or transmit for commercial, non-profit or public purposes all or any portion of this Web Site."

carl@[illegible] 1005 GRAVENSTEIN HIGHWAY NORTH, SEBASTOPOL, CALIFORNIA 95472 • PH: (707) 827-7290 • FX: (707) 829-0104

The terms of use, in turn, refer to the Copyright Statement from your vendor, which states:

> No part of the materials including graphics or logos, available in this Web site may be copied, photocopied, reproduced, translated or reduced to any electronic medium or machine-readable form, in whole or in part, without specific permission (to request permission to use materials, continue to our Permission Request Form). Distribution for commercial purposes is prohibited.
>
> *Source: http://www.lexisnexis.com/terms/copyright.aspx*
> *Last Retrieved: October 10, 2013*

If the user has the courage to click through, they are presented with a navigational interface based on frames and an extensive amount of clicking by the user before they can reach the section they are looking for (See Exhibit C). Finally, the user is presented with a section of the Code, for example Exhibit D, shows § 1-1-8.

The user interface your vendor presents is full of links to various proprietary products, but there is a little print icon, which presents a semi-clean version of the text, as shown in Exhibit E. However, there is a huge flaw in the user interface, in that the URL that is presented does not allow a user to share what they are looking at with other users. If you mail the URL to a friend, you don't get the section of the Code, you get a screen from your vendor hawking proprietary products as shown in Exhibit F.

The lack of permanent URLs and a modern user interface are just the beginning of problems with this web site.

- As you can see from Exhibit G, the site is replete with HTML errors, errors which prevent the text from properly working on modern standards-based browsers (I have included only the first 10 pages of the 39 page error report).
- In addition, as shown in Exhibit H, the site is replete with CSS errors, as shown in Exhibit H, making the site work improperly in browsers (again, I have included only the first 10 pages of the 165 error report, which is a test of only one of several of the CSS files used).
- In addition, as shown in Exhibit I, the site does not meet the Section 508 accessibility requirements of the U.S. Rehabilitation Act, which makes information available to people with disabilities.
- Finally, as shown in Exhibit J, your vendor does not permit search engines to crawl their site, making the most common discovery method for users unavailable in the case of the Mississippi Code. People should be able to easily discover what the law is.

Perhaps the biggest issue is that the public access that is provided does not allow bulk access to the data. This means that other sites, which might provide better formatting or accessibility, are prohibited from providing this service by the terms of use. There is no requirement that the State or your vendor provide a good web site, but prohibiting others from doing so is a significant barrier to the rule of law and our rights to read, know, and speak the laws which we must all obey.

Let me turn briefly now to the issue of the Annotated Official Code. Exhibit K contains the marketing literature provided by your vendor. As you can see, any citizen and

certainly any lawyer would feel totally remiss in not using the the official annotated version of the Code. The marketing literature stresses that:

> **Be sure that the law you read is the law indeed**
> Official isn't just a word. It's a process. The Mississippi Joint Legislative Committee on Compilation, Revision and Publication of Legislation maintains careful editorial control over the publication of the official code, from the moment LexisNexis receives the acts to the final galley proofs of the finished product. Their strict supervision ensures that the published code and its supplements contain no errors in content, conform carefully to the numbering scheme, and publish in a timely manner.
>
> **Cite the code that's guaranteed to be right**
> Because it's official, you can rely on LexisNexis' Mississippi Code of 1972 Annotated for the correct statement of the law ...

As you can see, it is very clear that the Code is the official statement of the law as promulgated by the State. This is not some independent commercial endeavor, this is an official process under the direction of the State.

I have attached as Exhibit L the same section earlier attached from Exhibit D, this one being the annotated version. As you can see by comparing the two, the Annotated Code includes important cross references, research references, and Editor's Notes. The Editor's notes are not simply creative work, they are important materials. For example, the note to § 1-1-11 is a reference to a statement adopted by the Joint Legislative Committee on Compilation, Revision and Publication of Legislation. Statements such as these are part and parcel of the law, statements of the codifiers that add important information to the original statutes.

I appreciate the efforts you have taken to reach out to me and the informative nature of your letter. It is clear you have given the matter careful consideration. However, we believe that the Official Code as promulgated by the Joint Legislative Committee and bearing the official authorship of the Committee falls squarely in the category of the law, which all citizens have the right to read, know and speak.

We therefore respectfully decline to remove the materials. However, I would be more than happy to discuss the matter including traveling to Mississippi to discuss the technical points which I have raised with you and others.

Sincerely yours,

Digitally signed by Carl Malamud
DN: cn=Carl Malamud, o=Public.Resource.Org, ou, email=carl@media.org, c=US
Date: 2013.10.11 09:58:41 -07'00'

Carl Malamud

enc: Trodart 5208 Self-Inking Rubber Stamp, Red Ink
"IF A LAW ISN'T PUBLIC, IT ISN'T A LAW. JUSTICE STEPHEN BREYER"

EXHIBIT A

LexisNexis

Mississippi Code Of 1972 Unannotated - Free Public Access

This website is maintained by LexisNexis®, the publisher of the Mississippi Code Of 1972 annotated to provide free public access to the law. It is not intended to replace professional legal consultation or advanced legal research tools. To report errors regarding this website, please complete the Feedback Form.

Terms & Conditions

Your use of this service is subject to Terms and Conditions. Please indicate your agreement to the Terms and Conditions by clicking "I Agree" below.

I Agree

EXHIBIT B

Terms

- Annual Maintenance Fee Agreement for PCLaw® Time Matters® and Billing Matters®
- End User License Agreement
- Juris® Subscription Agreement
- Juris® Perpetual Software Agreement
- Juris Software Maintenance and Technical Support Agreement (November 2006)
- Juris® Software Maintenance and Technical Support Agreement (Prior to November 2006)
- Lexis® Billing Matters®
- Lexis® PCLaw®
- Lexis® Time Matters®
- LexisNexis® Digital Library Terms and Conditions
- LexisNexis® Matthew Bender® Master Agreement
- LexisNexis® Matthew Bender® print product
- LexisNexis® Matthew Bender® CD product
- LexisNexis Total Practice Advantage™
- Professional Services Agreement
- Software Policies and FAQ for Time Matters®, Billing Matters® and PCLaw®
- Terms of Sale for PCLaw®, Time Matters® and Billing Matters®

Terms & Conditions

Terms and Conditions of Use
January 7, 2013

YOUR USE OF THIS WEB SITE CONSTITUTES YOUR AGREEMENT TO BE BOUND BY THESE TERMS AND CONDITIONS OF USE.

This web site, including all of its features and content (this "Web Site") is a service made available by LexisNexis, a division of Reed Elsevier Inc., or its affiliates ("Provider") and all content, information, services and software ordered or provided on or through this Web Site ("Content") may be used solely under the following terms and conditions ("Terms of Use").

1. Web Site Limited License. As a user of this Web Site you are granted a nonexclusive, nontransferable, revocable, limited license to access and use this Web Site and Content in accordance with these Terms of Use. Provider may terminate this license at any time for any reason.

2. Limitations on Use; Third Party Communications.

2.1 Limitations on Use. The Content on this Web Site is for your personal use only and not for commercial exploitation. Notwithstanding the foregoing and to the extent this Web Site provides electronic commerce, such buying opportunities may be made available for group as well as personal purchasing, so long as you are authorized to make purchases on behalf of such group. You may not use the Content to determine a consumer's eligibility for: (a) credit or insurance for personal, family, or household purposes; (b) employment; or (c) a government license or benefit. You may not decompile, reverse engineer, disassemble, rent, lease, loan, sell, sublicense, or create derivative works from this Web Site or the Content. Nor may you use any network monitoring or discovery software to determine the site architecture, or extract information about usage, individual identities or users. You may not use any robot, spider, other automatic software or device, or manual process to monitor or copy our Web Site or the Content without Provider's prior written permission. You may not use this Web Site to transmit any false, misleading, fraudulent or illegal communications. You may not copy, modify, reproduce, republish, distribute, display, or transmit for commercial, non-profit or public purposes all or any portion of this Web Site, except to the extent permitted above. You may not use or otherwise export or re-export this Web Site or any portion thereof, or the Content in violation of the export control laws and regulations of the United States of America. Any unauthorized use of this Web Site or its Content is prohibited.

2.2 Third Party Communications. Provider disclaims all liability for any Third Party Communications you may receive or any actions you may take or refrain from taking as a result of any Third Party Communications. You are solely responsible for assessing and verifying the identity and trustworthiness of the source and content of any Third Party Communications. Provider assumes no responsibility for verifying, and makes no representations or warranties regarding, the identity or trustworthiness of the source or content of any Third Party Communications. As used herein, "Third Party Communications" means any communications directed to you from any third party directly or indirectly in connection with this Web Site.

3. Not Legal Advice. Content is not intended to and does not constitute legal advice and no attorney-client relationship is formed, nor is anything submitted to this Web Site treated as confidential. The accuracy, completeness, adequacy or currency of the Content is not warranted or guaranteed. Your use of Content on this Web Site or materials linked from this Web Site is at your own risk.

4. Intellectual Property Rights.

4.1 Except as expressly provided in these Terms of Use, nothing contained herein shall be construed as conferring on you or any third party any license or right, by implication, estoppel or otherwise, under any law (whether common law or statutory law), rule or regulation including, without limitation those related to copyright or other intellectual property rights. You agree that the Content and Web Site are protected by copyrights, trademarks, service marks, patents or other proprietary rights and laws. For further information see Copyright.

4.2 This Web site contains interactive areas which includes, without limitation, any blogs, wikis, bulletin boards, discussion boards, chat rooms, email forums, and question and answer features (the "Interactive Areas"). You grant to Provider an irrevocable, non-exclusive, royalty-free, perpetual, worldwide license to use, authorize use of and have used on its behalf any ideas, expression of ideas, text, graphics, messages, blogs, links, data, information and other materials you submit (collectively, "Postings") to this Web Site. Said license is without restrictions of any kind and without any payment due from Provider to you or permission or notification, to you or any third party. The license includes, the right to make, use, sell,

reproduce, publish, modify, adapt, prepare derivative works from, combine with other works, translate, distribute -, display, perform and sublicense Postings- in any form, medium, or technology now known or hereafter developed.

4.3. You certify and warrant that the Postings, (i) are your original works or that the owner of such works has expressly granted to Provider a perpetual worldwide royalty-free irrevocable, non-exclusive license for said works with all of the rights granted by you in section 4.2 of these Terms of Use and (ii) do not violate and will not violate the rights of any third party including any right of publicity, right of privacy , copyright, patent or other intellectual property right or any proprietary right.

4.4. You acknowledge and agree that your submitting Postings to this Web Site does not create any new or alter any existing relationship between you and Provider.

4.5. If you have submitted a photo to your profile on lawyers.com you agree that this photo may be included in the Interactive Areas, including with your Postings. If you have not submitted a photo then Provider may, but is not obligated to, display a stock photo or legal image with your Postings. You hereby consent to the use of such stock photos or images in the Interactive Areas.

4.6. By submitting Postings to this Web Site, you acknowledge and agree that Provider may create on its own ideas that may be, or may obtain submissions that may be, similar or identical to Postings you submit. You agree that you shall have no recourse against Provider for any alleged or actual infringement or misappropriation of any proprietary or other right in the Postings you provide to Provider.

4.7. Provider shall have the exclusive option to purchase from you and acquire all right, title and interest in any Postings containing patentable subject-matter that you submit to this Web Site. The option shall be exercisable by Provider from the date you submit such Posting until one year from that date. If Provider exercises its option under this section 4.6, you agree to accept payment in the amount of $1,000.00 USD or value in kind at Provider's discretion as full and sufficient consideration for such purchase, and you agree to execute, acknowledge and deliver any and all instruments required to transfer legal ownership of Postings to Provider. Such instruments include, but are not limited to, assignments and declarations executed by you.

4.8. Additional Intellectual Property Terms for Ask A Lawyer

4.8.1 Notwithstanding the licenses granted in these Terms of Use, Attorneys who participate in Ask A Lawyer ("AAL") agree that their Postings, and all intellectual property rights therein, including, without limitation, all copyrights and moral rights, (collectively, "IP Rights") will be owned exclusively by Provider. You agree that Provider has commissioned you to provide such Postings, and that the Postings are works made for hire. To the extent ownership of Your Postings does not vest in Provider as a work made for hire, you hereby assign to Provider all IP Rights in and to the Postings. You also agree to promptly execute, acknowledge, and deliver to Provider any additional assignments or other documents that may be reasonably requested by Provider to effectuate the intent of the foregoing sentences. You acknowledge and agree that Provider, its parent and affiliated companies and their licensees and assigns, may use the Postings in any manner that deems appropriate without any attribution or payment to you of any sort. This paragraph will survive any termination of your participation in AAL.

4.8.2 Provider grants you a nonexclusive, nontransferable limited license to use your Postings within your Social Media Syndication. Your Social Media Syndication includes your firm's website, blog, Facebook, LinkedIn, and Twitter accounts and may include any other appropriate social media site you use for professional purposes. This limited license refers to the specific content which represents the questions to which you responded via AAL and your Postings (the "Designated Content") under the following terms and conditions:

4.8.2.a. Each use of the Designated Content includes a hyperlink to the most recent AAL Q&A or other pages in AAL as designated by Provider, and

4.8.2.b. Each use of the Designated Content is solely for the purposes of promoting and marketing AAL and/or your contribution of the Designated Content (collectively the "Purpose").

4.8.2.c. The Marks, Link and Designated Content shall not be used in any media or for which benefits any Provider competitor.

4.8.2.d. You represent that (i) you shall comply with all policies and terms established by Provider for hyperlinking, use of Marks, or use of any Provider content, including the Designated Content including but not limited to Provider's positioning, messaging, and trademark and logo usage policies, as may be communicated from time to time; (ii) you shall only use the Mark provided to you by Provider according to these Terms Of Use, and you will not use any other mark without Provider's prior written consent; (iii) you shall not to create any combination mark with any Provider Mark; and (iv) you do not acquire any rights to Provider copyrights, marks, or any other intellectual property under these Terms of Use except the limited rights necessary to fulfill the Purpose for the service under these Terms of Use.

4.8.3. Provider may immediately terminate, in whole or with regard to a specific use, your license to use any Mark if Provider determines in its sole discretion that such use dilutes, diminishes, or blurs the value of the any of the Marks or does not comply with Provider's usage policies. Upon Provider's request you agree to remove the Designated Content, Marks and Links within 14 days of Provider's notice to you.

4.8.4. You authorized Provider to publish or distribute, at its sole discretion, advertising or promotional materials including your firm name, personal name, trademarks, service marks, logos, image, and photos, for the purpose of promoting the Interactive Areas of this Web Site.

5. Digital Millennium Copyright Act - Notification of Alleged Copyright Infringement. Provider has registered an agent with the United States Copyright Office in accordance with the terms of the Digital Millennium Copyright Act (the "Act") and avails itself of the protections under the Act. Provider reserves the right to remove any Content that allegedly infringes another person's copyright. Provider will terminate, in appropriate circumstances, subscribers and account holders of Provider's system or network who are repeat infringers of another person's copyright. Notices to Provider regarding any alleged copyright infringement should be directed to the LexisNexis Chief Legal Officer via mail or courier at 9443 Springboro Pike, Miamisburg, Ohio 45342, via fax at 937-865-1211 or via email at legalnotices@lexisnexis.com.

6. Linking to this Web Site. You may provide links to this Web Site, provided that (a) you do not remove or obscure, by framing or otherwise, any portion of this Web Site, including any advertisements, terms of use, copyright notice, and other notices on this Web Site, (b) you immediately deactivate and discontinue providing links to this Web Site if requested by Provider, and (c) Provider may deactivate any link(s) at its discretion.

7. No Solicitation. You shall not distribute on or through this Web Site any Postings containing any advertising, promotion, solicitation for goods, services or funds or solicitation for others to become members of any enterprise or organization without the express written permission of Provider. Notwithstanding the foregoing, in any interactive areas of this Web Site, where appropriate you at may list along with your name, address and email address, your own web site's URL and b) may recommend third party web sites, goods or services so long as you have no financial interest in and receive no direct or indirect benefit from such recommended web site, product or service or its recommendation. In no event may any person or entity solicit anyone with data retrieved from this Web Site.

8. Advertisers. This Web Site may contain advertising and sponsorship. Advertisers and sponsors are responsible for ensuring that material submitted for inclusion on this Web Site is accurate and complies with applicable laws. Provider will not be responsible for the illegality of or any error or inaccuracy in advertisers' or sponsors' materials or for the acts or omissions of advertisers and sponsors.

9. Registration. Certain sections of this Web Site require you to register. If registration is requested, you agree to provide accurate and complete registration information. It is your responsibility to inform Provider of any changes to that information. Each registration is for a single individual only, unless specifically designated otherwise on the registration page. Provider does not permit a) anyone other than you to use the sections requiring registration by using your name or password, or b) access through a single name being made available to multiple users on a network or otherwise. You are responsible for preventing such unauthorized use. If you believe there has been unauthorized use, you must notify Provider immediately by emailing legalnotices@lexisnexis.com.

10. Postings in Interactive Areas of this Web Site.

10.1. Postings to be Lawful. If you participate in interactive Areas on this Web Site, you shall not post, publish, upload or distribute any Postings which are unlawful or abusive in any way, including, but not limited to, any Postings that are defamatory, libelous, pornographic, obscene, threatening, invasive of privacy or publicity rights, exclusive of hate speech, or would constitute or encourage a criminal offense, violate the rights of any party, or give rise to liability or violate any local, state, federal or international law, or the regulations of the U.S. Securities and Exchange Commission, any rules of any securities exchange such as the New York Stock Exchange, the American Stock Exchange, or the NASDAQ, either intentionally or unintentionally. Provider may delete your Postings at any time for any reason without permission from you.

10.2. Postings to be in Your Name. Your Postings shall be accompanied by your real name and shall not be posted anonymously. Notwithstanding the previous sentence, if the applicable registration page for your participation in any of the Interactive Areas allows you to create a screen name, you may also select and use an appropriate screen name that is not your real name, provided that you use your real name when registering for participation in the Interactive Area and attorneys agree their real name may always be posted. Participants in Interactive Areas shall not misrepresent their identity or their affiliation with any person or entity.

10.3. Postings shall not contain protected health information. You are strictly prohibited from submitting Postings that are considered protected health information under the Health Accountability and Portability Protection Act of 1996 (HIPAA) or the Health Information Technology for Economic and Clinical Health Act of 2009 (HITECH).

10.4. No Monitoring of Postings. Provider has no obligation to monitor or screen Postings and is not responsible for the content in such Postings or any content linked to or from such Postings. Provider however reserves the right, in its sole discretion, to monitor Interactive Areas, screen Postings, edit Postings, name Postings not to be posted, published, uploaded or distributed, and remove Postings, at any time and for any reason or no reason.

10.5. Non-Commercial Use only of Interactive Areas. Interactive Areas are provided solely for your personal use. Any unauthorized use of the Interactive Areas of this Web Site, its Content, or Postings is expressly prohibited.

11. Errors and Corrections. Provider does not represent or warrant that this Web Site or the Content or Postings will be error-free, free of viruses or other harmful components, or that defects will be corrected or that it will always be accessible. Provider does not warrant or represent that the Content or Postings available on or through this Web Site will be correct, accurate, timely, or otherwise reliable. Provider may make improvements and/or changes in its features, functionality or Content or Postings at any time.

12. Third Party Content. Third party content (including, without limitation, Postings) may appear on this Web Site or may be accessible via links from this Web Site. Provider shall not be responsible for and assumes no liability for any infringement, mistakes, misstatements of law, defamation, slander, libel, omissions, falsehood, obscenity, pornography or profanity in the statements, opinions, representations or any other form of content contained in any third party content appearing on this Web Site. You understand that the information and opinions in the third party content is neither endorsed by nor does it reflect the belief or opinion of Provider. Further, information and opinions provided by employees and agents of Provider in Interactive Areas are not necessarily endorsed by Provider and do not necessarily represent the beliefs and opinions of Provider.

13. Attorney Ethics Notice; Posting Rules. If you are an attorney participating in any aspect of this Web Site, including but not limited to Interactive Areas, a) you agree not to provide specific legal advice in any of your Postings and to draft Postings which are appropriate, educational, and in accordance with attorney ethics requirements, b) you represent and warrant that you are an attorney in good standing with a license to practice law in at least one of the 50 United States of America or the District of Columbia, c) you agree to promptly notify Provider of any grievance, claim, reprimand, or censure brought against you, as well as resignation or other loss of license, d) you acknowledge that the Rules of Professional Conduct of the jurisdictions where you are licensed ("Rules") apply to all aspects of your participation and that you will abide by these Rules. These Rules include, but are not limited to, the rules relating to advertising, solicitation of clients, rules regarding the establishment of attorney-client relationships, failure to maintain client confidences, unauthorized practice of law, and misrepresentations of fact. Provider disclaims all responsibility for your compliance with these Rules. You further agree and acknowledge that when you participate in any of the Interactive Areas on this Web Site, that you will not offer legal advice, but will only provide general information. Provider highly recommends that you include a disclaimer at the end of every Posting regarding the aforementioned advertising and ethics issues. Provider will have no liability to you arising out of or related to your compliance or noncompliance with such laws and rules, or related to Provider's inclusion or failure to include a disclaimer in the Interactive Areas.

14. Additional Terms for Attorney's Participating in Ask A Lawyer

14.1. You agree that your participation is as an unpaid, volunteer, and that the purpose of such participation is to provide public education on legal matters and to provide you and your firm national exposure. You may terminate your participation in AAL at any time for any reason or no reason by providing Provider with notice of termination at least three days prior to the effective date of termination at mhcr@martindale.com.

14.2. Your name will be associated with each of your Postings in AAL when one of your Responses is included in the "Most Recent Q&A" section of AAL. Each question and corresponding Response may be archived and searchable on AAL and in other site searches associated with Lawyers.com and Provider's media outlets. Visitors currently have the ability to view these archives, but such public access to the archives is not guaranteed. Provider, at its discretion, may associate your name with your archived Responses; however Provider is not required to do so.

14.3. You are prohibited from responding to questions via personal and professional email, telephone or otherwise. You will not directly contact visitors who post questions on AAL prior to posting your response on AAL and any contact should be in compliance with attorney ethics requirements. All Responses must be submitted through the Administrative Page.

14.4. You represent and warrant to Provider that (a) you will perform your duties for the Ask a Lawyer service in a highly professional manner, (b) except for public domain materials, your Responses will not infringe any third party rights, (c) your Responses will be your original work not previously published and will not contain libelous, obscene, or unlawful material, (d) the Responses will not invade anyone's privacy rights, and (e) your participation in the Ask a Lawyer service presents no conflicts of interest for you, and You assume all liability for any claims, suits, or grievances filed against you, including any and all damages related, due to your participation as a National Attorney Panelist.

15. Assumption of Risk. You assume all liability for any claims, suits or grievances filed against you, including all damages related to your participation in any of the Interactive Areas.

16. DISCLAIMER. THIS WEB SITE, THE INTERACTIVE AREAS, THE CONTENT, AND POSTINGS ARE PROVIDED ON AN "AS IS, AS AVAILABLE" BASIS. PROVIDER EXPRESSLY DISCLAIMS ALL WARRANTIES, INCLUDING THE WARRANTIES OF MERCHANTABILITY, FITNESS FOR A PARTICULAR PURPOSE AND NON-INFRINGEMENT. PROVIDER DISCLAIMS ALL RESPONSIBILITY FOR ANY LOSS, INJURY, CLAIM, LIABILITY, OR DAMAGE OF ANY KIND RESULTING FROM, ARISING OUT OF OR ANY WAY RELATED TO (A) ANY ERRORS IN OR OMISSIONS FROM THIS WEB SITE, THE INTERACTIVE AREAS, THE CONTENT, AND THE POSTINGS INCLUDING, BUT NOT LIMITED TO, TECHNICAL INACCURACIES AND TYPOGRAPHICAL ERRORS, (B) THIRD PARTY COMMUNICATIONS, (C) ANY THIRD PARTY WEB SITES OR CONTENT THEREIN DIRECTLY OR INDIRECTLY ACCESSED THROUGH LINKS IN THIS WEB SITE, INCLUDING BUT NOT LIMITED TO ANY ERRORS IN OR OMISSIONS THEREFROM, (D) THE UNAVAILABILITY OF THIS WEB SITE, THE INTERACTIVE AREAS, THE CONTENT, THE POSTINGS, OR ANY PORTION THEREOF, (E) YOUR USE OF THIS WEB SITE, THE INTERACTIVE AREAS, THE CONTENT, OR THE POSTINGS, OR (F) YOUR USE OF ANY EQUIPMENT OR SOFTWARE IN CONNECTION WITH THIS WEB SITE, THE INTERACTIVE AREAS, THE CONTENT, OR THE POSTINGS.

17. LIMITATION OF LIABILITY. PROVIDER SHALL NOT BE LIABLE FOR ANY LOSS, INJURY, CLAIM, LIABILITY, OR DAMAGE OF ANY KIND RESULTING FROM YOUR USE OF THIS WEB SITE, THE CONTENT, THE POSTINGS, THE INTERACTIVE AREAS, ANY FACTS

OR OPINIONS APPEARING ON OR THROUGH ANY OF THE INTERACTIVE AREAS, OR ANY THIRD PARTY COMMUNICATIONS. PROVIDER SHALL NOT BE LIABLE FOR ANY SPECIAL, DIRECT, INDIRECT, INCIDENTAL, PUNITIVE OR CONSEQUENTIAL DAMAGES OF ANY KIND WHATSOEVER (INCLUDING, WITHOUT LIMITATION, ATTORNEYS' FEES) IN ANY WAY DUE TO, RESULTING FROM, OR ARISING IN CONNECTION WITH THE USE OF OR INABILITY TO USE THIS WEB SITE, THE INTERACTIVE AREAS, THE CONTENT, THE POSTINGS, OR ANY THIRD PARTY COMMUNICATIONS. TO THE EXTENT THE FOREGOING LIMITATION OF LIABILITY IS PROHIBITED OR FAILS OF ITS ESSENTIAL PURPOSE, PROVIDER'S SOLE OBLIGATION TO YOU FOR DAMAGES SHALL BE LIMITED TO $100.00.

18. Indemnification: You agree to indemnify, defend and hold Provider, its officers, directors, employees, agents, licensors, suppliers and any third party information providers to this Web Site harmless from and against all claims, losses, expenses, damages and costs, including reasonable attorneys' fees, resulting from any violation of these Terms of Use by you or arising from or related to any Postings uploaded or submitted by you.

19. Third Party Rights. The provisions of paragraphs 14 (Disclaimer), 15 (Limitation of Liability), and 16 (Indemnification) are for the benefit of Provider and its officers, directors, employees, agents, licensors, suppliers, and any third party information providers to this Web Site. Each of these individuals or entities shall have the right to assert and enforce those provisions directly against you on its own behalf.

20. Unlawful Activity; Termination of Access. Provider reserves the right to investigate complaints or reported violations of our Terms of Use and to take any action we deem appropriate including but not limited to reporting any suspected unlawful activity to law enforcement officials, regulators, or other third parties and disclosing any information necessary or appropriate to such persons or entities relating to user profiles, e-mail addresses, usage history, posted materials, IP addresses and traffic information. Provider may discontinue any party's participation in any of the Interactive Areas at any time for any reason or no reason.

21. Remedies for Violations. Provider reserves the right to seek all remedies available at law and in equity for violations of these Terms of Use, including but not limited to the right to block access from a particular internet address to this Web Site and any other Provider web sites and their features.

22. Governing Law and Jurisdiction. The Terms of Use are governed by and construed in accordance with the laws of the State of New York and any action arising out of or relating to these terms shall be filed only in state or federal courts located in New York and you hereby consent and submit to the personal jurisdiction of such courts for the purpose of litigating any such action.

23. Privacy. Except with respect to Martindale-Hubbell Connected, your use of this Web Site is subject to Provider's Privacy Policy. With respect to Martindale-Hubbell Connected, your use of such Web Site is subject to this Privacy Policy.

24. Additional Terms for LexisNexis Services. Your use of the LexisNexis Online Services, case law, legal forms and other related legal materials ("LexisNexis Services") is also governed by the General Terms and Conditions for Use of the LexisNexis Services, and if applicable the LexisNexis Services Supplemental Terms for Specific Materials, (collectively the "Provider Services Terms") which are provided during the registration process for these LexisNexis Services, all of which are incorporated by reference herein. Your completion of the LexisNexis Services registration process constitutes your acceptance of the Provider Services Terms. If you do not agree with any Provider Services Terms, you are not permitted to access the LexisNexis Services.

25. Severability of Provisions. These Terms of Use incorporate by reference any notices contained on this Web Site, the Privacy Policy and the Provider Services Terms and constitute the entire agreement with respect to access to and use of this Web Site, the Interactive Areas, and the Content and Postings. If any provision of these Terms of Use is unlawful, void or unenforceable, or conflicts with the Provider Services Terms then that provision shall be deemed severable from the remaining provisions and shall not affect their validity and enforceability. Notwithstanding anything to the contrary in these Terms of Use, if you have a separate signed written agreement with a Provider that applies to your use of any of that Provider's Content, that agreement constitutes the entire agreement between you and that Provider with respect to the affected Content subject thereto (the "Otherwise Covered Content"), and these Terms of Use shall be treated as having no force or effect with respect to the Otherwise Covered Content.

26. Modifications to Terms of Use. Provider reserves the right to change these Terms of Use at any time. Updated versions of the Terms of Use will appear on this Web Site and are effective immediately. You are responsible for regularly reviewing the Terms of Use. Continued use of this Web Site after any such changes constitutes your consent to such changes.

Copyright © 2013 LexisNexis. All rights reserved.

EXHIBIT C

View TOC 1 - 79 of 79

Copyright © 2013 by The State of Mississippi;. All rights reserved.

Mississippi Code of 1972 Unannotated View Tutorial | Help

Terms and Connectors Natural Language

Search: Full-text of source documents Table of Contents (TOC) only Search Advanced

Search Selected Only

Clear All Selections | Hide Book Headers

- **TITLE 1. LAWS AND STATUTES**
  - CHAPTER 1. CODE OF 1972
    - IN GENERAL
      - §§ 1-1-1 through 1-1-6. Repealed
      - § 1-1-7. Contents
      - § 1-1-8. Official code; recognition as evidence of public statute laws; restrictions on use of certain words or ...
      - § 1-1-9. Copyright; use of code material
      - § 1-1-11. Distribution of the Code of 1972
      - § 1-1-12. Binding and identification of state-owned copies of Code of 1972
      - § 1-1-13. When Code of 1972 to take effect
      - § 1-1-15. Repealed
      - § 1-1-17. Appropriations
      - § 1-1-19. Repeal of former statutes -- Effect of Code of 1972 upon laws enacted at same session or before Code ...
      - § 1-1-21. Effect of repeals by Code of 1972 upon former rights
      - § 1-1-22. Prior rights or actions involving taxes unaffected
      - § 1-1-23. Effect of adoption of Code of 1972 upon offenses committed prior to effective date of Code
      - § 1-1-24. Prior violations of law and civil causes of action unaffected
      - § 1-1-25. No revival of repealed laws
      - § 1-1-27. Vacation of offices by adoption of Code of 1972
      - § 1-1-29. Effect of adoption of Code of 1972 upon private and local laws
      - § 1-1-31. Severability provision of Code of 1972
      - § 1-1-33. Code of 1972 supplied to officers
      - § 1-1-35. Revised manuscript declared to be official Code of the state of Mississippi
      - § 1-1-37. Enrollment of the Code of 1972
      - § 1-1-39. Deposition and preservation of enrolled draft
    - SUPPLEMENTATION OF CODE OF 1972 AND UPDATE OF COMPUTER TAPES
    - JOINT LEGISLATIVE COMMITTEE ON COMPILATION, REVISION AND PUBLICATION OF LEGISLATION
  - CHAPTER 3. CONSTRUCTION OF STATUTES
  - CHAPTER 5. SESSION LAWS AND JOURNALS
- **TITLE 3. STATE SOVEREIGNTY, JURISDICTION AND HOLIDAYS**
- **TITLE 5. LEGISLATIVE DEPARTMENT**
- **TITLE 7. EXECUTIVE DEPARTMENT**
- **TITLE 9. COURTS**

- TITLE 11. CIVIL PRACTICE AND PROCEDURE
- TITLE 13. EVIDENCE, PROCESS AND JURIES
- TITLE 15. LIMITATIONS OF ACTIONS AND PREVENTION OF FRAUDS
- TITLE 17. LOCAL GOVERNMENT; PROVISIONS COMMON TO COUNTIES AND MUNICIPALITIES
- TITLE 19. COUNTIES AND COUNTY OFFICERS
- TITLE 21. MUNICIPALITIES
- TITLE 23. ELECTIONS
- TITLE 25. PUBLIC OFFICERS AND EMPLOYEES; PUBLIC RECORDS
- TITLE 27. TAXATION AND FINANCE
- TITLE 29. PUBLIC LANDS, BUILDINGS AND PROPERTY
- TITLE 31. PUBLIC BUSINESS, BONDS AND OBLIGATIONS
- TITLE 33. MILITARY AFFAIRS
- TITLE 35. WAR VETERANS AND PENSIONS
- TITLE 37. EDUCATION
- TITLE 39. LIBRARIES, ARTS, ARCHIVES AND HISTORY
- TITLE 41. PUBLIC HEALTH
- TITLE 43. PUBLIC WELFARE
- TITLE 45. PUBLIC SAFETY AND GOOD ORDER
- TITLE 47. PRISONS AND PRISONERS; PROBATION AND PAROLE
- TITLE 49. CONSERVATION AND ECOLOGY
- TITLE 51. WATERS, WATER RESOURCES, WATER DISTRICTS, DRAINAGE, AND FLOOD CONTROL
- TITLE 53. OIL, GAS, AND OTHER MINERALS
- TITLE 55. PARKS AND RECREATION
- TITLE 57. PLANNING, RESEARCH AND DEVELOPMENT
- TITLE 59. PORTS, HARBORS, LANDINGS AND WATERCRAFT
- TITLE 61. AVIATION
- TITLE 63. MOTOR VEHICLES AND TRAFFIC REGULATIONS
- TITLE 65. HIGHWAYS, BRIDGES AND FERRIES
- TITLE 67. ALCOHOLIC BEVERAGES
- TITLE 69. AGRICULTURE, HORTICULTURE, AND ANIMALS
- TITLE 71. LABOR AND INDUSTRY
- TITLE 73. PROFESSIONS AND VOCATIONS
- TITLE 75. REGULATION OF TRADE, COMMERCE AND INVESTMENTS
- TITLE 77. PUBLIC UTILITIES AND CARRIERS
- TITLE 79. CORPORATIONS, ASSOCIATIONS, AND PARTNERSHIPS
- TITLE 81. BANKS AND FINANCIAL INSTITUTIONS
- TITLE 83. INSURANCE
- TITLE 85. DEBTOR-CREDITOR RELATIONSHIP
- TITLE 87. CONTRACTS AND CONTRACTUAL RELATIONS
- TITLE 89. REAL AND PERSONAL PROPERTY
- TITLE 91. TRUSTS AND ESTATES
- THE CONSTITUTION OF THE STATE OF MISSISSIPPI
- TITLE 93. DOMESTIC RELATIONS
- TITLE 95. TORTS
- TITLE 97. CRIMES
- TITLE 99. CRIMINAL PROCEDURE

1 - 79 of 79

Key:

- Click to expand level.*
- Click to collapse level.*
- Click to expand document subheadings.*
- Click to collapse document subheadings.*
- Click link to display full text of document.*
- Click to generate a TOC linking url.

Hover your cursor over this icon to display the Multiple Level Expand Navigation menu.

View TOC 1 - 79 of 79

LexisNexis® About LexisNexis | Privacy Policy | Terms & Conditions | Contact Us
Copyright © 2013 LexisNexis, a division of Reed Elsevier Inc. All rights reserved.

EXHIBIT D

FOCUS™ Terms Search Within Original Results (1 - 1) Go Advanced...
View Tutorial
View Full 1 of 1
Book Browse

Miss. Code Ann. § 1-1-8 (Copy w/ Cite) Pages: **2**

Miss. Code Ann. § 1-1-8

MISSISSIPPI CODE of 1972

** Current through the 2013 Regular Session and 1st and 2nd Extraordinary Sessions ***

TITLE 1. LAWS AND STATUTES
CHAPTER 1. CODE OF 1972
IN GENERAL

Miss. Code Ann. § 1-1-8 (2013)

§ 1-1-8. Official code; recognition as evidence of public statute laws; restrictions on use of certain words or names in title of codes other than official version

(1) The Mississippi Code of 1972 Annotated, as amended, modified and revised from time to time, that is published by the company with which the Joint Legislative Committee on Compilation, Revision and Publication of Legislation has contracted under Section 1-1-107(a):

(a) Is the official code of the public statute laws of the State of Mississippi that are enacted by the Legislature; and

(b) Shall be used, received, recognized and referred to as the official code of the public statute laws of the State of Mississippi, and shall be considered as evidence of the public statute laws of the State of Mississippi, in all courts of the State and by all public officers, offices, departments and agencies of the state and its political subdivisions, and in all other places or instances where the public statute laws of the State may come into question. However, if there is any conflict between the language of any statute as it appears in the Mississippi Code of 1972 Annotated and in the General Laws of Mississippi, the language in the General Laws shall control; and if there is any conflict between the language of any statute as it appears in the General Laws of Mississippi and in the original enrolled bills enacted by the Legislature, the language in the enrolled bills shall control.

(2) No publisher of a code of the public statute laws of the State of Mississippi, other than the publishing company with which the Joint Legislative Committee on Compilation, Revision and Publication of Legislation has contracted under Section 1-1-107(a), shall be authorized to use as the name, title or designation of the code that is published, the words "Mississippi Code of 1972," "Mississippi Code 1972," "Mississippi Code of 1972 Annotated," "Mississippi Code 1972 Annotated," "Annotated Mississippi Code of 1972," "Annotated Mississippi Code 1972," or any other combination of words containing "Code of 1972," "Code 1972" or "1972 Code." The joint committee may seek injunctive relief, or authorize the publisher of the official code to seek injunctive relief on behalf of the joint committee, against any person or entity to enforce the provisions of this subsection.

HISTORY: SOURCES: Laws, 1999, ch. 310, § 2, eff from and after passage (approved Mar. 8, 1999)

View 1 of 1

Book Browse

Miss. Code Ann. § 1-1-8 (Copy w/ Cite)

LexisNexis® About LexisNexis Privacy Policy Terms & Conditions Contact Us
Copyright © 2013 LexisNexis, a division of Reed Elsevier Inc. All rights reserved.

EXHIBIT E

Miss. Code Ann. § 1-1-8

MISSISSIPPI CODE of 1972

** Current through the 2013 Regular Session and 1st and 2nd Extraordinary Sessions ***

TITLE 1. LAWS AND STATUTES
CHAPTER 1. CODE OF 1972
IN GENERAL

Miss. Code Ann. § 1-1-8 (2013)

§ 1-1-8. Official code; recognition as evidence of public statute laws; restrictions on use of certain words or names in title of codes other than official version

(1) The Mississippi Code of 1972 Annotated, as amended, modified and revised from time to time, that is published by the company with which the Joint Legislative Committee on Compilation, Revision and Publication of Legislation has contracted under Section 1-1-107(a):

(a) Is the official code of the public statute laws of the State of Mississippi that are enacted by the Legislature; and

(b) Shall be used, received, recognized and referred to as the official code of the public statute laws of the State of Mississippi, and shall be considered as evidence of the public statute laws of the State of Mississippi, in all courts of the State and by all public officers, offices, departments and agencies of the state and its political subdivisions, and in all other places or instances where the public statute laws of the State may come into question. However, if there is any conflict between the language of any statute as it appears in the Mississippi Code of 1972 Annotated and in the General Laws of Mississippi, the language in the General Laws shall control; and if there is any conflict between the language of any statute as it appears in the General Laws of Mississippi and in the original enrolled bills enacted by the Legislature, the language in the enrolled bills shall control.

(2) No publisher of a code of the public statute laws of the State of Mississippi, other than the publishing company with which the Joint Legislative Committee on Compilation, Revision and Publication of Legislation has contracted under Section 1-1-107(a), shall be authorized to use as the name, title or designation of the code that is published, the words "Mississippi Code of 1972," "Mississippi Code 1972," "Mississippi Code of 1972 Annotated," "Mississippi Code 1972 Annotated," "Annotated Mississippi Code of 1972," "Annotated Mississippi Code 1972," or any other combination of words containing "Code of 1972," "Code 1972" or "1972 Code." The joint committee may seek injunctive relief, or authorize the publisher of the official code to seek injunctive relief on behalf of the joint committee, against any person or entity to enforce the provisions of this subsection.

HISTORY: SOURCES: Laws, 1999, ch. 310, § 2, eff from and after passage (approved Mar. 8, 1999)

LexisNexis® About LexisNexis Privacy Policy Terms & Conditions Contact Us
Copyright © 2013 LexisNexis, a division of Reed Elsevier Inc. All rights reserved.

EXHIBIT F

Lexis® Total Research System Sign In 10/9/13 6:13 PM

Select another LexisNexis® service Go

Lexis® Total Research System

Welcome

Lexis® Research System provides the most expansive collection of online content available anywhere and the tools you need to extract the essentials from the overwhelming amount of information available. Spend less time searching, more time developing your strategies with LexisNexis.

New User?

- Take a tour
- Create a Custom ID
- Training Resources
- Request Telephonic Training
- Go to LexisNexis Store

Sign In

ID

Forgot ID?

Password

Forgot password?

Remember me? What's this?

Change password
Sign-in tips
System requirements

Sign In

Use of this service is subject to terms & conditions.

New user? Already have a Custom ID?

Create a Custom ID | Custom ID Manager

Customer Support: 1-800-543-6862

Law Student?

Already have a Lexis Advance® ID?

SIGN IN TO LEXIS ADVANCE®

Lexis Advance® makes legal research faster and easier and ensures you have the critical resources you need to tackle all legal matters that come your way.

Don't have a Lexis Advance® account? Shop in our store or talk with a sales person:
888-253-3901

LexisNexis® | LexisNexis Home | About LexisNexis | Privacy Policy | Terms & Conditions
Copyright © 2013 LexisNexis. All rights reserved.

https://www.lexisnexis.com/start/signin/service=lexis&contractUR...C0-0256706DA973_k9B444501-7D12-A37C-FF17-208B20D9611E&event=form Page 1 of 1

EXHIBIT G

W3C Markup Validation Service

Check the markup (HTML, XHTML, ...) of Web documents

Jump To: Notes and Potential Issues Validation Output

Errors found while checking this document as HTML 4.01 Transitional!

Result:	83 Errors, 34 warning(s)

Source :	`<html>`
	`<head>`
	`<meta name="viewport" content="width=device-width, initial-scale=1.0, maximum-scale=1.0;" />`
	`<link rel="stylesheet" type="text/css" href="/ri/newUIGlobal_05-OCT-2013.css"></link>`
	
	`<LINK REL="stylesheet" TYPE="text/css" HREF="/ri/starpag_05-OCT-2013.css" >`
	`<LINK REL="stylesheet" TYPE="text/css" HREF="/ri/ldcPopUp_05-OCT-2013.css">`

Encoding :	utf-8 (detect automatically)
Doctype :	HTML 4.01 Transitional (detect automatically)
Root Element:	html

W3C VALIDATOR Suite

Try now the W3C Validator Suite™ premium service that checks your entire website and evaluates its conformance with W3C open standards to quickly identify those portions of your website that need your attention.

mozilla

The W3C validators are developed with assistance from the Mozilla Foundation, and supported by community donations. 4430

Donate and help us build better tools for a better web.

Options

Show Source | Show Outline | List Messages Sequentially / Group Error Messages by Type

Validate error pages | Verbose Output | Clean up Markup with HTML-Tidy

Help on the options is available | Revalidate

Notes and Potential Issues

The following notes and warnings highlight missing or conflicting information which caused the validator to perform some guesswork prior to validation, or other things affecting the output below. If the guess or fallback is incorrect, it could make validation results entirely incoherent. It is *highly recommended* to check these potential issues, and, if necessary, fix them and re-validate the document.

Unable to Determine Parse Mode!

The validator can process documents either as XML (for document types such as XHTML, SVG, etc.) or SGML (for HTML 4.01 and prior versions). For this document, the information available was not sufficient to determine the parsing mode unambiguously, because:

- in *Direct Input* mode, no MIME Media Type is served to the validator
- No known Document Type could be detected
- No XML declaration (e.g `<?xml version="1.0"?>`) could be found at the beginning of the document.
- No XML namespace (e.g `<html xmlns="http://www.w3.org/1999/xhtml" xml:lang="en">`) could be found at the root of the document.

As a default, the validator is falling back to SGML mode.

No DOCTYPE found! Checking with default HTML 4.01 Transitional Document Type.

No DOCTYPE Declaration could be found or recognized in this document. This generally means that the document is not declaring its Document Type at the top. It can also mean that the DOCTYPE declaration contains a spelling error, or that it is not using the correct syntax.

The document was checked using a default "fallback" Document Type Definition that closely resembles "HTML 4.01 Transitional".

Learn how to add a doctype to your document from our FAQ.

No Character encoding declared at document level

No character encoding information was found within the document, either in an HTML `meta` element or an XML declaration. It is often recommended to declare the character encoding in the document itself, especially if there is a chance that the document will be read from or saved to disk, CD, etc.

See this tutorial on character encoding for techniques and explanations.

Using Direct Input mode: UTF-8 character encoding assumed

Unlike the "by URI" and "by File Upload" modes, the "Direct Input" mode of the validator provides validated content in the form of characters pasted or typed in the validator's form field. This will automatically make the data UTF-8, and therefore the validator does not need to determine the character encoding of your document, and will ignore any charset information specified.

If you notice a discrepancy in detected character encoding between the "Direct Input" mode and other validator modes, this is likely to be the reason. It is neither a bug in the validator, nor in your document.

Validation Output: 83 Errors

Line 2, Column 1: **no document type declaration; implying "<!DOCTYPE HTML SYSTEM>"**

`<html>`

The checked page did not contain a document type ("DOCTYPE") declaration. The Validator has tried to validate with a fallback DTD, but this is quite likely to be incorrect and will generate a large number of incorrect error messages. It is highly recommended that you insert the

proper DOCTYPE declaration in your document -- instructions for doing this are given above -- and it is necessary to have this declaration before the page can be declared to be valid.

Line 4, Column 91: NET-enabling start-tag requires SHORTTAG YES

```
ewport" content="width=device-width, initial-scale=1.0, maximum-scale=1.0;" />
```

For the current document, the validator interprets strings like `<foo />` according to legacy rules that break the expectations of most authors and thus cause confusing warnings and error messages from the validator. This interpretation is triggered by HTML 4 documents or other SGML-based HTML documents. To avoid the messages, simply remove the "/" character in such contexts. NB: If you expect `<foo />` to be interpreted as an XML-compatible "self-closing" tag, then you need to use XHTML or HTML5.

This warning and related errors may also be caused by an unquoted attribute value containing one or more "/". Example: `<a href=http://w3c.org>W3C</a>`. In such cases, the solution is to put quotation marks around the value.

Line 4, Column 92: character data is not allowed here

```
ewport" content="width=device-width, initial-scale=1.0, maximum-scale=1.0;" />
```

You have used character data somewhere it is not permitted to appear. Mistakes that can cause this error include:

- putting text directly in the body of the document without wrapping it in a container element (such as a aragraph), or
- forgetting to quote an attribute value (where characters such as "%" and "/" are common, but cannot appear without surrounding quotes), or
- using XHTML-style self-closing tags (such as <meta ... />) in HTML 4.01 or earlier. To fix, remove the extra slash ('/') character. For more information about the reasons for this, see Empty elements in SGML, HTML, XML, and XHTML.

Line 5, Column 86: end tag for element "LINK" which is not open

```
rel="stylesheet" type="text/css" href="/ri/newUIGlobal_05-OCT-2013.css"></link>
```

The Validator found an end tag for the above element, but that element is not currently open. This is often caused by a leftover end tag from an element that was removed during editing, or by an implicitly closed element (if you have an error related to an element being used where it is not allowed, this is almost certainly the case). In the latter case this error will disappear as soon as you fix the original problem.

If this error occurred in a script section of your document, you should probably read this FAQ entry.

Line 13, Column 64: required attribute "TYPE" not specified

```
_05-OCT-2013.js" language="JavaScript"></script><script src="/ri/browser_05-OC…
```

The attribute given above is required for an element that you've used, but you have omitted it. For instance, in most HTML and XHTML document types the "type" attribute is required on the "script" element and the "alt" attribute is required for the "img" element.

Typical values for `type` are `type="text/css"` for `<style>` and `type="text/javascript"` for `<script>`.

Line 13, Column 136: required attribute "TYPE" not specified

```
_05-OCT-2013.js" language="JavaScript"></script><script src="/ri/ldcDom_utils_…
```

The attribute given above is required for an element that you've used, but you have omitted it. For instance, in most HTML and XHTML document types the "type" attribute is required on the "script" element and the "alt" attribute is required for the "img" element.

Typical values for `type` are `type="text/css"` for `<style>` and `type="text/javascript"` for `<script>`.

Line 13, Column 213: required attribute "TYPE" not specified

```
_05-OCT-2013.js" language="JavaScript"></script><script src="/ri/attoo_nas_05-…
```

The attribute given above is required for an element that you've used, but you have omitted it. For instance, in most HTML and XHTML document types the "type" attribute is required on the "script" element and the "alt" attribute is required for the "img" element.

Typical values for `type` are `type="text/css"` for `<style>` and `type="text/javascript"` for `<script>`.

Line 13, Column 287: required attribute "TYPE" not specified

```
_05-OCT-2013.js" language="JavaScript"></script><script src="/ri/dom_et3_ni_05…
```

The attribute given above is required for an element that you've used, but you have omitted it. For instance, in most HTML and XHTML document types the "type" attribute is required on the "script" element and the "alt" attribute is required for the "img" element.

Typical values for `type` are `type="text/css"` for `<style>` and `type="text/javascript"` for `<script>`.

Line 13, Column 362: required attribute "TYPE" not specified

```
_05-OCT-2013.js" language="JavaScript"></script><script src="/ri/us_me_ui_05-O…
```

The attribute given above is required for an element that you've used, but you have omitted it. For instance, in most HTML and XHTML document types the "type" attribute is required on the "script" element and the "alt" attribute is required for the "img" element.

Typical values for `type` are `type="text/css"` for `<style>` and `type="text/javascript"` for `<script>`.

Line 13, Column 435: required attribute "TYPE" not specified

```
_05-OCT-2013.js" language="JavaScript"></script><script src="/ri/dom_me_ui_05-…
```

The attribute given above is required for an element that you've used, but you have omitted it. For instance, in most HTML and XHTML document types the "type" attribute is required on the "script" element and the "alt" attribute is required for the "img" element.

Typical values for `type` are `type="text/css"` for `<style>` and `type="text/javascript"` for `<script>`.

Line 13, Column 509: required attribute "TYPE" not specified

```
_05-OCT-2013.js" language="JavaScript"></script><script src="/ri/commonscript_…
```

The attribute given above is required for an element that you've used, but you have omitted it. For instance, in most HTML and XHTML document types the "type" attribute is required on the "script" element and the "alt" attribute is required for the "img" element.

Typical values for `type` are `type="text/css"` for `<style>` and `type="text/javascript"` for `<script>`.

Line 13, Column 586: required attribute "TYPE" not specified

```
_05-OCT-2013.js" language="JavaScript"></script><script src="/ri/browser_05-OC…
```

The attribute given above is required for an element that you've used, but you have omitted it. For instance, in most HTML and XHTML document types the "type" attribute is required on the "script" element and the "alt" attribute is required for the "img" element.

Typical values for `type` are `type="text/css"` for `<style>` and `type="text/javascript"` for `<script>`.

Line 13, Column 658: required attribute "TYPE" not specified

```
_05-OCT-2013.js" language="JavaScript"></script><script src="/ri/ldc_navbar_05…
```

The attribute given above is required for an element that you've used, but you have omitted it. For instance, in most HTML and XHTML document types the "type" attribute is required on the "script" element and the "alt" attribute is required for the "img" element.

Typical values for `type` are `type="text/css"` for `<style>` and `type="text/javascript"` for `<script>`.

Line 13, Column 733: required attribute "TYPE" not specified

```
_05-OCT-2013.js" language="JavaScript"></script><script src="/ri/ldc_gnsm_ui_0…
```

The attribute given above is required for an element that you've used, but you have omitted it. For instance, in most HTML and XHTML document types the "type" attribute is required on the "script" element and the "alt" attribute is required for the "img" element.

Typical values for `type` are `type="text/css"` for `<style>` and `type="text/javascript"` for `<script>`.

Line 13, Column 809: required attribute "TYPE" not specified

```
…pt><script src="/ri/ldc_gnsm_ui_05-OCT-2013.js" language="JavaScript"></script>
```

The attribute given above is required for an element that you've used, but you have omitted it. For instance, in most HTML and XHTML document types the "type" attribute is required on the "script" element and the "alt" attribute is required for the "img" element.

Typical values for `type` are `type="text/css"` for `<style>` and `type="text/javascript"` for `<script>`.

Line 15, Column 33: required attribute "TYPE" not specified

```
<SCRIPT language="JavaScript1.2">
```

The attribute given above is required for an element that you've used, but you have omitted it. For instance, in most HTML and XHTML document types the "type" attribute is required on the "script" element and the "alt" attribute is required for the "img" element.

Typical values for `type` are `type="text/css"` for `<style>` and `type="text/javascript"` for `<script>`.

Line 127, Column 8: required attribute "TYPE" not specified

```
<script></script>
```

The attribute given above is required for an element that you've used, but you have omitted it. For instance, in most HTML and XHTML document types the "type" attribute is required on the "script" element and the "alt" attribute is required for the "img" element.

Typical values for `type` are `type="text/css"` for `<style>` and `type="text/javascript"` for `<script>`.

Line 132, Column 35: there is no attribute "TOPMARGIN"

```
<body bgcolor="#FFFFFF" topmargin=0 leftmargin=0 rightmargin=0 ID="body"
```

You have used the attribute named above in your document, but the document type you are using does not support that attribute for this element. This error is often caused by incorrect use of the "Strict" document type with a document that uses frames (e.g. you must use the "Transitional" document type to get the "target" attribute), or by using vendor proprietary extensions such as "marginheight" (this is usually fixed by using CSS to achieve the desired effect instead).

This error may also result if the element itself is not supported in the document type you are using, as an undefined element will have no supported attributes; in this case, see the element-undefined error message for further information.

How to fix: check the spelling and case of the element and attribute, (Remember XHTML is all lower-case) and/or check that they are both allowed in the chosen document type, and/or use CSS instead of this attribute. If you received this error when using the <embed> element to incorporate flash media in a Web page, see the FAQ item on valid flash.

Line 132, Column 48: there is no attribute "LEFTMARGIN"

```
<body bgcolor="#FFFFFF" topmargin=0 leftmargin=0 rightmargin=0 ID="body"
```

You have used the attribute named above in your document, but the document type you are using does not support that attribute for this element. This error is often caused by incorrect use of the "Strict" document type with a document that uses frames (e.g. you must use the "Transitional" document type to get the "target" attribute), or by using vendor proprietary extensions such as "marginheight" (this is usually fixed by using CSS to achieve the desired effect instead).

This error may also result if the element itself is not supported in the document type you are using, as an undefined element will have no supported attributes; in this case, see the element-undefined error message for further information.

How to fix: check the spelling and case of the element and attribute, (Remember XHTML is all

lower-case) and/or check that they are both allowed in the chosen document type, and/or use CSS instead of this attribute. If you received this error when using the <embed> element to incorporate flash media in a Web page, see the FAQ item on valid flash.

Line 132, Column 62: there is no attribute "RIGHTMARGIN"

```
<body bgcolor="#FFFFFF" topmargin=0 leftmargin=0 rightmargin=0 ID="body"
```

You have used the attribute named above in your document, but the document type you are using does not support that attribute for this element. This error is often caused by incorrect use of the "Strict" document type with a document that uses frames (e.g. you must use the "Transitional" document type to get the "target" attribute), or by using vendor proprietary extensions such as "marginheight" (this is usually fixed by using CSS to achieve the desired effect instead).

This error may also result if the element itself is not supported in the document type you are using, as an undefined element will have no supported attributes; in this case, see the element-undefined error message for further information.

How to fix: check the spelling and case of the element and attribute, (Remember XHTML is all lower-case) and/or check that they are both allowed in the chosen document type, and/or use CSS instead of this attribute. If you received this error when using the <embed> element to incorporate flash media in a Web page, see the FAQ item on valid flash.

Line 133, Column 14: there is no attribute "MARGINHEIGHT"

```
marginheight=0 marginwidth=0  onResize="resizeHandler()" onLoad="changeFont();l…
```

You have used the attribute named above in your document, but the document type you are using does not support that attribute for this element. This error is often caused by incorrect use of the "Strict" document type with a document that uses frames (e.g. you must use the "Transitional" document type to get the "target" attribute), or by using vendor proprietary extensions such as "marginheight" (this is usually fixed by using CSS to achieve the desired effect instead).

This error may also result if the element itself is not supported in the document type you are using, as an undefined element will have no supported attributes; in this case, see the element-undefined error message for further information.

How to fix: check the spelling and case of the element and attribute, (Remember XHTML is all lower-case) and/or check that they are both allowed in the chosen document type, and/or use CSS instead of this attribute. If you received this error when using the <embed> element to incorporate flash media in a Web page, see the FAQ item on valid flash.

Line 133, Column 28: there is no attribute "MARGINWIDTH"

```
marginheight=0 marginwidth=0  onResize="resizeHandler()" onLoad="changeFont();l…
```

You have used the attribute named above in your document, but the document type you are using does not support that attribute for this element. This error is often caused by incorrect use of the "Strict" document type with a document that uses frames (e.g. you must use the "Transitional" document type to get the "target" attribute), or by using vendor proprietary extensions such as "marginheight" (this is usually fixed by using CSS to achieve the desired effect instead).

This error may also result if the element itself is not supported in the document type you are using, as an undefined element will have no supported attributes; in this case, see the element-undefined error message for further information.

How to fix: check the spelling and case of the element and attribute. (Remember XHTML is all lower-case) and/or check that they are both allowed in the chosen document type, and/or use CSS instead of this attribute. If you received this error when using the <embed> element to incorporate flash media in a Web page, see the FAQ item on valid flash.

Line 133, Column 40: there is no attribute "ONRESIZE"

```
…arginheight=0 marginwidth=0  onResize="resizeHandler()" onLoad="changeFont();l…
```

You have used the attribute named above in your document, but the document type you are using does not support that attribute for this element. This error is often caused by incorrect use of the "Strict" document type with a document that uses frames (e.g. you must use the "Transitional" document type to get the "target" attribute), or by using vendor proprietary extensions such as "marginheight" (this is usually fixed by using CSS to achieve the desired effect instead).

This error may also result if the element itself is not supported in the document type you are using, as an undefined element will have no supported attributes; in this case, see the element-undefined error message for further information.

How to fix: check the spelling and case of the element and attribute. (Remember XHTML is all lower-case) and/or check that they are both allowed in the chosen document type, and/or use CSS instead of this attribute. If you received this error when using the <embed> element to incorporate flash media in a Web page, see the FAQ item on valid flash.

Line 133, Column 95: document type does not allow element "BODY" here

```
…arginwidth=0  onResize="resizeHandler()" onLoad="changeFont();loadHandler();" >
```

The element named above was found in a context where it is not allowed. This could mean that you have incorrectly nested elements -- such as a "style" element in the "body" section instead of inside "head" -- or two elements that overlap (which is not allowed).

One common cause for this error is the use of XHTML syntax in HTML documents. Due to HTML's rules of implicitly closed elements, this error can create cascading effects. For instance, using XHTML's "self-closing" tags for "meta" and "link" in the "head" section of a

EXHIBIT H

The W3C CSS Validation Service

W3C CSS Validator results for TextArea (CSS level 3)

Jump to: Errors (156) Warnings (47) Validated CSS

W3C CSS Validator results for TextArea (CSS level 3)

Sorry! We found the following errors (156)

URI : TextArea

119	.term, .thTerm	Value Error : cursor hand is not a cursor value : hand
126	.pmterm	hand is not a cursor value : hand
140	.helpLHideN	Value Error : visibility hide is not a visibility value : hide
140	.helpLHideN	Property zindex doesn't exist : 1
141	.helpL0N	Value Error : visibility hide is not a visibility value : hide
141	.helpL0N	Property zindex doesn't exist : 1
142	.helpL1N	Value Error : visibility hide is not a visibility value : hide
142	.helpL1N	Property zindex doesn't exist : 2
143	.helpL2N	Value Error : visibility hide is not a visibility value : hide
143	.helpL2N	Property zindex doesn't exist : 3
144	.helpL3N	Value Error : visibility hide is not a visibility value : hide
144	.helpL3N	Property zindex doesn't exist : 4
145	.txtHide	Value Error : visibility hide is not a visibility value : hide
147	.txt#tagDel	Value Error : visibility hide is not a visibility value : hide
148	.txt#tagDelS	Value Error : visibility show is not a visibility value : show
149	.txt#tagSrc	Value Error : visibility hide is not a visibility value : hide
150	.txt#tagSrcS	Value Error : visibility show is not a visibility value : show
165	.tocexpandNS	Value Error : visibility hide is not a visibility value : hide
168	.tocexpandNS	Property layer-background-color doesn't exist : #FFFFCC

174	.tocposNS	Value Error : visibility hide is not a visibility value : hide
175	.tocposShowNS	Value Error : visibility show is not a visibility value : show
182	.tocexpandIE	Property layer-background-color doesn't exist : #FFFFCC
191	.CALyr	Property layer-background-color doesn't exist : #FFFFCC
220	.tocScrollDiv	Value Error : height only 0 can be a length. You must put a unit after your number : 100
221	.tocScrollDiv	Value Error : width only 0 can be a length. You must put a unit after your number : 380
227	.tocScrollDivNS	Value Error : height only 0 can be a length. You must put a unit after your number : 100
228	.tocScrollDivNS	Value Error : width only 0 can be a length. You must put a unit after your number : 380
296	.hpOpt	Value Error : width "162px" is not a width value : "162px"
320	.fpMenuCell	Value Error : cursor normal is not a cursor value : normal
327	.fpMenuCellHover	Value Error : cursor hand is not a cursor value : hand
373	.tabActive, .tabInactive	hand is not a cursor value : hand
406	.menu a:visited	Value Error : color 0 is not a color value : 0
410	.menu a:hover	Value Error : color 0 is not a color value : 0
415	td.menu	Value Error : color 0 is not a color value : 0
445	td.disabled	Value Error : color 999966 is not a color value : 999966
450	td.disabled	Property font-color doesn't exist : 999966
469	.InPopupStyle	Property layer-background-color doesn't exist : #DFDFDF
482	.CRNTrailStyle	Property layer-background-color doesn't exist : #DFDFDF
574	a.rtMenuItem:hover	Value Error : cursor hand is not a cursor value : hand
608	tr.trActive	Value Error : cursor hand is not a cursor value : hand
620	span.imgInactive	Property ackground-image doesn't exist : url(/ri/arrow_black.gif)
631	img.meDocHand	Value Error : cursor hand is not a cursor value : hand
797	a.dftintraInk	Value Error : color Unknown dimension 3300cc

888	.hpTopLk2	hand is not a cursor value : hand
932	.smallsans	Value Error : font-family Parse Error : , Arial, Helvetica, sans-serif
935	.smallsansInact	Value Error : font-family Parse Error : , Arial, Helvetica, sans-serif
943	.trGNSMActive	Value Error : font-family Parse Error : , Arial, Helvetica, sans-serif
953	.trGNSMInactive	Value Error : font-family Parse Error : , Arial, Helvetica, sans-serif
960	table.tableMenu	Value Error : cursor hand is not a cursor value : hand
963	span.disabledLink	Value Error : color 999999 is not a color value : 999999
1035	tr.SStrActiveClass	Value Error : cursor hand is not a cursor value : hand
1073	.ssrchDocSel	Value Error : width only 0 can be a length. You must put a unit after your number : 285
1077	.ssrchDocSel	Value Error : border Unknown dimension 2pxinset
1104	.tsppopupclose	Value Error : cursor hand is not a cursor value : hand
1140	#tsppopup	Parse Error duration=1)
1176	.scBlackTerm	Value Error : color #black is not a valid color 3 or 6 hexadecimals numbers : #black
1183	.spellCheckFakeDivIE	none is not a overflow-x value : none
1298	.SS_popmenu	Parse Error -HEIGHT: 1.1em
1349	.SS_popmenubar A	hand is not a cursor value : hand
1438	tr.SS_headerblack td	Value Error : padding only 0 can be a length. You must put a unit after your number : 3 3 3 3
1445	tr.SS_subheaderdkgray td	Value Error : padding only 0 can be a length. You must put a unit after your number : 3 3 3 3
1451	tr.SS_noshadewhite td	Value Error : padding only 0 can be a length. You must put a unit after your number : 3 3 3 3
1469	table.SS_tableborder	Value Error : width only 0 can be a length. You must put a unit after your number : 750
1473	table.SS_tablenoborder	Value Error : width only 0 can be a length. You must put a unit after your number : 750

1700	.pgheader	Property font-color doesn't exist : #000000
1903	input.editButton, input.browseButton	Value Error : cursor hand is not a cursor value : hand
1916	input.selectSourcesButton	Value Error : cursor hand is not a cursor value : hand
1967	.rbcTitleBar	Value Error : font-family 11px is not a font-family value : 11px Verdana,Arial,Helvetica,sans-serif
1989	.rbcFormHeading	Value Error : font-size only 0 can be a length. You must put a unit after your number : 11
1995	.rbcFormSelect	Value Error : font-size only 0 can be a length. You must put a unit after your number : 11
1995	.rbcFormSelect	Value Error : width only 0 can be a length. You must put a unit after your number : 200
2003	input.rbcFormSelect	Parse Error onfocus="newcodeopt.checked='checked';"
2007	.rbcGoImage	Value Error : vertical-align null is not a vertical-align value : center
2011	#rbcInput1	Value Error : width only 0 can be a length. You must put a unit after your number : 20
2038	.panebarselectedtab	Value Error : background #FFFFF is not a background-color value : #FFFFF url(/ri/TabMiddleWhite.gif) repeat-x
2149	input.invButtonWidget	Value Error : height only 0 can be a length. You must put a unit after your number : 30
2150	input.invButtonWidget	Value Error : width only 0 can be a length. You must put a unit after your number : 49
2153	input.invButtonWidget:hover	Value Error : height only 0 can be a length. You must put a unit after your number : 30
2154	input.invButtonWidget:hover	Value Error : width only 0 can be a length. You must put a unit after your number : 49
2240	input.bentArrowButton	Value Error : cursor hand is not a cursor value : hand
2261	input.tpCheckmarkRedButton	Value Error : cursor hand is not a cursor value : hand
2497	#sourceList input	Value Error : cursor ptr is not a cursor value : ptr
2502	#sourceList label	Value Error : cursor ptr is not a cursor value : ptr
2577	input.addButton	Value Error : cursor hand is not a cursor value : hand

2598	input.removeButton	Value Error : cursor hand is not a cursor value : hand
2619	input.moveUpButton	Value Error : cursor hand is not a cursor value : hand
2640	input.moveDownButton	Value Error : cursor hand is not a cursor value : hand
2781	*	Parse Error *html div#fas_content .header span.right { margin: -3px 3px 0 0; }
3022	.l3Bold1	Value Error : padding-right only 0 can be a length. You must put a unit after your number : 2
3058	*	Parse Error *html img.marketingBlurb { width:187px; height:234px; border:0px; padding-left:5p; margin-right:220px; }
3071	*	Parse Error *html img.quickSearchMarketingBlurb { width:188px; height:167px; border:0px; padding-left:5p; margin-right:220px; }
3080	*	Parse Error *html td.lastQSRow { padding-top:7; padding-left:12px; padding-bottom:10px; }
3105	.qsTabActive, .qsTabInactive	Value Error : cursor hand is not a cursor value : hand
3146	*	Parse Error *html div#quickSearchByRcntSrc a.formfld {position:relative; top:-3px;}
3220	div#deliveryLinks ul	Property bottom-padding doesn't exist : 2px
3312	ul#topnav li	Value Error : font-size normal is not a font-size value : normal
3399	ul#topnav li .sub, #subnavdiv .sub, #header .ddsub	Value Error : left only 0 can be a length. You must put a unit after your number : -90
3627	li.LeftSelectedTab	Value Error : background-position only 0 can be a length. You must put a unit after your number : 0 0,50% 23,right 0
3683	#subnavdiv a.disabled	Property visibilty doesn't exist : hidden
3804	.primary	Parse Error color=#000000)
3934	.buttonGetAndFind	Parse Error *margin-right:3px;
3935		Unknown pseudo-element or pseudo-class :bold
3937		Parse Error [85% Verdana; } html:not([dummy]) .buttonGetAndFind]

3946	.buttonShepards	Parse Error *margin-right:3px;
3947		Unknown pseudo-element or pseudo-class :relative
3947	position	Parse Error relative;
3955		Parse Error [:6px; *position:none; *bottom:0px; padding-top:6px !important; padding-bottom:6px !important; padding-left:2px; } html:not([dummy]) .buttonShepards]
3970	.buttonLexis	Parse Error *position:none;
3971	*	Parse Error *bottom:0px;
3975		Parse Error [:6px !important; padding-bottom:6px !important; } html:not([dummy]) .buttonLexis]
4024	html:not([dummy]) .scrollDivTable	Value Error : padding-left only 0 can be a length. You must put a unit after your number : 10
4161	.alertsHeader	Value Error : border-color cccccc is not a border-color value : cccccc
4176	div.alertsOuter	Value Error : border-left-color cccccc is not a border-left-color value : cccccc
4177	div.alertsOuter	Value Error : border-right-color cccccc is not a border-right-color value : cccccc
4182	div.alertsOuter	Value Error : clear all is not a clear value : all
4185	div.alertsOuter	Value Error : border-top-color b0012d is not a border-top-color value : b0012d
4195	div.alertsBody	Value Error : border-color cccccc is not a border-color value : cccccc
4199	div.alertsBody	Value Error : clear all is not a clear value : all
4209	div.alertsBodyGw	Value Error : border-color cccccc is not a border-color value : cccccc
4250	.alertsLinkInactive	Value Error : color Too many values or values are not recognized : dark blue
4324	.alertsLeftTabSpacer	Value Error : border-bottom-color cccccc is not a border-bottom-color value : cccccc
4335	.alertsTabSpacer	Value Error : border-bottom-color cccccc is not a border-bottom-color value : cccccc

4349	.alertsRightTabSpacer	Value Error : border-bottom-color cccccc is not a border-bottom-color value : cccccc
4541	.selectedtabstyle	Property size doesn't exist : 10
5074	*	Parse Error *html input.invSrchFrmAjaxButton, button.invSrchFrmAjaxButton { width:auto; _width:100px; }
5088	#mainLayer li:hover	Value Error : text-decoration unerline is not a color value : unerline
5161	*	Parse Error *html fieldset { padding:5px 0 10px 0; }
5164	*	Parse Error *html div.searchForm fieldset { width:650px; }
5170	*	Parse Error *html div.searchFormNoSpellCheck fieldset#semantic_restrDate { width:580px; }
5190	*	Parse Error *html div.searchForm { margin-left:3px; }
5193	*	Parse Error *html div.searchFormNoSpellCheck { margin-left:3px; }
5223	*	Parse Error *html form#boolForm fieldset#bool_termsEntry, *html form#freeForm fieldset#free_termsEntry { width:500px; _width:490px; }
5281	*	Parse Error *html form#boolForm fieldset#boolFormOptions, *html form#freeForm fieldset#freeFormOptions { left:4px; }
5300	*	Parse Error *html div.searchFormOption { overflow-y: hidden; overflow-x: hidden; }
5325	*	Parse Error *html div.searchFormOptionActive { overflow-y: hidden; overflow-x: hidden; position:relative; left:5px; height:20px; margin-left: -5px; _width:145px; }
5345	*	Parse Error *html input.invSrchFrmButton, button.invSrchFrmButton { font: 11px Verdana,Arial,Helvetica,sans-serif; text-decoration:none; color:#004b91; background:transparent; border:0; padding:0 2px 0 0; margin:0; width:105px; height:auto; text-align:left; }
5364	*	Parse Error *html form#sourceSearchForm fieldset#formOptions{ padding-bottom:0px; }
5459	*	Parse Error *html div#semInputHelp { padding-left:135px; width:579px; }

5464		Parse Error [:]
5531	*	Parse Error *html fieldset#bool_tocSearchWithin input, fieldset#free_tocSearchWithin input { margin: -3px 0px 0px; }
5543	*	Parse Error *html div#bool_tocSelectedNodes input.khakiButton, *html div#free_tocSelectedNodes input.khakiButton { float:right; margin-right:90px; }
5620	*	Parse Error *html div#featuredContent.fc_truncDisplay input#fc_viewAll, *html div#featuredContent.fc_selectDisplay input#fc_viewAll { margin-left:5px; }
5750	div#freeHelpPod a	Value Error : font inherit is not a font value : inherit Verdana,Arial,Helvetica,sans-serif
5755	div#easyHelpPod a	Value Error : font inherit is not a font value : inherit Verdana,Arial,Helvetica,sans-serif
5759	div#semHelpPod a	Value Error : font inherit is not a font value : inherit Verdana,Arial,Helvetica,sans-serif
5802	*	Parse Error *html div#formPageErr { width:550px; }
5820	.edit	Parse Error color=#000000)
6006	*	Parse Error *html iframe#disablePage { position:absolute; filter:alpha(opacity=60); top: expression((topval=document.body.scrollTop)+'px'); height: expression((heightval=document.body.clientHeight)+'px'); width: expression((widthval=document.body.clientWidth)+'px'); }
6011	html > body iframe#disablePage	Parse Error opacity=60)
6050	*	Parse Error *html body div#bool_searchTerms_fake, *html body div#free_searchTerms_fake { width:390px; height:130px; }
6235	.dedupeBottom	Property maring-top doesn't exist : 5px
6302	#transDiv	Parse Error opacity=40)
6513	#transitionDiv	Parse Error = 0)
6572	.tabletBGheader	Value Error : background-image top is not a color value)

6741	a.tabletOptionTabs	Value Error : background-image top is not a color value)
6766	.fifolabelsel	Property align doesn't exist : left

I ♥ VALIDATOR

The W3C validators rely on community support for hosting and development.
Donate and help us build better tools for a better web.

4430

Warnings (47)

URI : TextArea

84		Family names containing whitespace should be quoted. If quoting is omitted, any whitespace characters before and after the name are ignored and any sequence of whitespace characters inside the name is converted to a single space.
88		Family names containing whitespace should be quoted. If quoting is omitted, any whitespace characters before and after the name are ignored and any sequence of whitespace characters inside the name is converted to a single space.
91		Family names containing whitespace should be quoted. If quoting is omitted, any whitespace characters before and after the name are ignored and any sequence of whitespace characters inside the name is converted to a single space.
96		Family names containing whitespace should be quoted. If quoting is omitted, any whitespace characters before and after the name are ignored and any sequence of whitespace characters inside the name is converted to a single space.
216	.tocScrollDiv	Same color for background-color and border-top-color
216	.tocScrollDiv	Same color for background-color and border-right-color
216	.tocScrollDiv	Same color for background-color and border-bottom-color
216	.tocScrollDiv	Same color for background-color and border-left-color

224	.tocScrollDivNS	Same color for background-color and border-top-color
224	.tocScrollDivNS	Same color for background-color and border-right-color
224	.tocScrollDivNS	Same color for background-color and border-bottom-color
224	.tocScrollDivNS	Same color for background-color and border-left-color
1181	.spellCheckFakeDivIE	Same color for background-color and border-top-color
1181	.spellCheckFakeDivIE	Same color for background-color and border-right-color
1181	.spellCheckFakeDivIE	Same color for background-color and border-bottom-color
1181	.spellCheckFakeDivIE	Same color for background-color and border-left-color
1291	.SS_popmenu	Same color for background-color and color
1719	input.saBtn	Same color for background-color and color
2652	hr.tabEditSectionDivider	Same color for background-color and color
3400	#header .ddsub	Same color for background-color and border-top-color
3400	#header .ddsub	Same color for background-color and border-top-color
3400	#header .ddsub	Same color for background-color and border-top-color
3801	.primary	Same color for background-color and border-top-color
3801	.primary	Same color for background-color and border-right-color
3801	.primary	Same color for background-color and border-bottom-color
3801	.primary	Same color for background-color and border-left-color
5078		Property _width is an unknown vendor extension
5114	.priErr	Same color for background-color and border-top-color
5114	.priErr	Same color for background-color and border-right-color
5114	.priErr	Same color for background-color and border-bottom-color
5114	.priErr	Same color for background-color and border-left-color

EXHIBIT I

http://www.lexisnexis.com/hottopics/mscode/ - Section 508

Scan completed: 10/10/2013 2:03:22 PM

Group	All issues
Section 508	7

Section 508 guidelines for web applications as described at the US Access Board web site.

- 1194.22(a)

  A text equivalent for every non-text element shall be provided (e.g., via "alt", "longdesc", or in element content).

  - a.1 All IMG elements are required to contain either...

    The ALT or LONGDESC attribute is used by user agents to supply information about an image when images cannot be shown.

    - Non-decorative IMG element contains empty ALT attribute.
      - http://www.lexisnexis.com/hottopics/mscode/bann...
        - Line 40, column 33, IMG element, SRC = "http://www.lexi...ottopics/mscode/images/20x20.gif"
    - Page does not have IMG elements.
      - http://www.lexisnexis.com/hottopics/mscode/
      - http://www.lexisnexis.com/hottopics/mscode/blan...
      - http://www.lexisnexis.com/hottopics/mscode/layo...
  - a.2 All APPLET elements are required to contain bot...

    APPLET elements provide functionality that is not available to all users. Either the element content or the ALT attribute are used to describe the purpose of the applet, depending on the user agent.

    - No APPLET elements found.
      - http://www.lexisnexis.com/hottopics/mscode/
      - http://www.lexisnexis.com/hottopics/mscode/bann...
      - http://www.lexisnexis.com/hottopics/mscode/blan...
      - http://www.lexisnexis.com/hottopics/mscode/layo...
  - a.3 When EMBED elements are used, the NOEMBED eleme...

    EMBED elements present functionality not available to all users. The NOEMBED element can be used to provide a description.

    - Page does not have EMBED elements.
      - http://www.lexisnexis.com/hottopics/mscode/
      - http://www.lexisnexis.com/hottopics/mscode/bann...
      - http://www.lexisnexis.com/hottopics/mscode/blan...
      - http://www.lexisnexis.com/hottopics/mscode/layo...
  - a.4 All OBJECT elements are required to contain ele...

    OBJECT elements typically use technologies that are not available to all users. The element content is used to describe the purpose of the object/applet.

    - Page does not have OBJECT elements.
      - http://www.lexisnexis.com/hottopics/mscode/
      - http://www.lexisnexis.com/hottopics/mscode/bann...
      - http://www.lexisnexis.com/hottopics/mscode/blan...
      - http://www.lexisnexis.com/hottopics/mscode/layo...
- 1194.22(d)

  Documents shall be organized so they are readable without requiring an associated style sheet.

  - d.2 Failure of Success Criterion 1.4.3, 1.4.6 and 1...

    Users with vision loss or cognitive challenges often require specific foreground (text) and background color combinations. For instance, many people with low vision find it much easier to see a Web page that has white text on a black background, so they may have set their user agent to create this contrast. If the author specifies that the text must be black, then it may override the settings of the user agent and render a page that has black text (specified by the author) on black background (that was set in the user agent). This principle also works in reverse. If the Webmaster forces the background to be white, then the white background specified by the author

would be the same color as the white text (which was set in the user agent) rendering the page unusable to the user. Therefore, if the author specifies a foreground (text) color then they should also specify a background color which has sufficient contrast (link) with the foreground and vice versa.

- Element specifies background color but not specify foreground (text) color
  - http://www.lexisnexis.com/hottopics/mscode/bann...
    - Line 40, column 9, TD element
    - Line 40, column 33, IMG element, SRC = "http://www.lexi...ottopics/mscode/images/20x20.gif"
  - http://www.lexisnexis.com/hottopics/mscode/layo...
    - Line 31, column 1, TABLE element
    - Line 32, column 3, TR element
    - Line 33, column 5, TD element
    - Line 35, column 3, TR element
    - Line 38, column 3, TR element
    - Line 39, column 4, TD element
    - Line 39, column 28, BR element
    - Line 40, column 303, A element, HREF = "http://www.lexi...com/hottopics/mscode/support.htm"
    - Line 40, column 359, BR element
    - Line 40, column 365, BR element
    - Line 41, column 5, STRONG element
    - Line 41, column 40, BR element
    - Line 42, column 44, A element, HREF = "http://www.lexisnexis.com/terms"
    - Line 42, column 167, A element, HREF = "http://www.lexisnexis.com/terms"
    - Line 44, column 3, TR element
    - Line 45, column 5, TD element
    - Line 48, column 3, TR element
    - Line 49, column 5, TD element
    - Line 52, column 1, DIV element
- Page contain no elements that specific foreground color but no background color or vice versa
  - http://www.lexisnexis.com/hottopics/mscode/
  - http://www.lexisnexis.com/hottopics/mscode/blan...

- 4.1 Organize documents so they may be read without ...

  Organize documents so they may be read without style sheets. For example, when an HTML document is rendered without associated style sheets, it must still be possible to read the page.

  - Page uses an external style sheet. Verify that the page can be read without it.
    - http://www.lexisnexis.com/hottopics/mscode/bann...
    - http://www.lexisnexis.com/hottopics/mscode/layo...
  - Page does not use style sheets.
    - http://www.lexisnexis.com/hottopics/mscode/
    - http://www.lexisnexis.com/hottopics/mscode/blan...
- 4.3 Making the DOM order match the visual order
  - Elements displayed with absolute positioning may be out of logical DOM order
    - http://www.lexisnexis.com/hottopics/mscode/layo...
      - Line 30, column 1, DIV element
  - Page does not use absolute positioning
    - http://www.lexisnexis.com/hottopics/mscode/
    - http://www.lexisnexis.com/hottopics/mscode/bann...
    - http://www.lexisnexis.com/hottopics/mscode/blan...

- 1194.22(i)

  Frames shall be titled with text that facilitates frame identification and navigation

  - .1 All IFRAME elements are required to contain ele...

    IFRAME elements provide functionality that is not available to all users. The element content should describe the purpose of the IFRAME.

    - IFRAME element does not have element content.
      - http://www.lexisnexis.com/hottopics/mscode/layo...
        - Line 24, column 9, IFRAME element, SRC = "http://www.lexi....com/hottopics/mscode/banner.htm"
        - Line 27, column 43, IFRAME element
    - Page does not have IFRAME elements.
      - http://www.lexisnexis.com/hottopics/mscode/
      - http://www.lexisnexis.com/hottopics/mscode/bann...
      - http://www.lexisnexis.com/hottopics/mscode/blan...
  - .2 All FRAME elements are required to contain the ...
    - FRAME element does not contain a TITLE attribute.
      - http://www.lexisnexis.com/hottopics/mscode/
        - Line 17, column 3, FRAME element, SRC = "http://www.lexi....com/hottopics/mscode/layout.htm"
        - Line 18, column 3, FRAME element, SRC = "http://www.lexi...s.com/hottopics/mscode/blank.htm"
      - http://www.lexisnexis.com/hottopics/mscode/layo...

- Line 24, column 9, IFRAME element, SRC = "http://www.lexi....com/hottopics/mscode/banner.htm"
- Line 27, column 43, IFRAME element

- No FRAME elements found in document body.
  - http://www.lexisnexis.com/hottopics/mscode/bann...
  - http://www.lexisnexis.com/hottopics/mscode/blan...
- .3 All FRAMESET elements will be checked for the N...

  Pages with frames are not available to all users. The NOFRAMES element should used to provide an alternative.

  - Outer FRAMESET does not have NOFRAMES.
    - http://www.lexisnexis.com/hottopics/mscode/
  - Page does not have FRAMESET elements.
    - http://www.lexisnexis.com/hottopics/mscode/bann...
    - http://www.lexisnexis.com/hottopics/mscode/blan...
    - http://www.lexisnexis.com/hottopics/mscode/layo...

- 1194.22(c)

  Web pages shall be designed so that all information conveyed with color is also available without color; for example from context or markup.

  - c.1 Ensure that all information conveyed with color:...

    This check identifies pages that potentially require color for visual checking.

    - Page references an external style-sheet. Visual check required.
      - http://www.lexisnexis.com/hottopics/mscode/bann...
      - http://www.lexisnexis.com/hottopics/mscode/layo...
    - Page does not specify color information.
      - http://www.lexisnexis.com/hottopics/mscode/
      - http://www.lexisnexis.com/hottopics/mscode/blan...
- 1194.22(g)

  Row and column headers shall be identified for data tables.

  - g.1 For data tables, identify row and column headers

    This check identifies data tables that do not have any TH elements. Data tables are recognised as having a border attribute greater than 0. Tables with no border require a visual check, unless they contain input, image or child table elements, or cells with long text, indicating they are most likely layout tables.

    - Possible data table does not use TH element.
      - http://www.lexisnexis.com/hottopics/mscode/bann...
        - Line 41, column 34, TABLE element
      - http://www.lexisnexis.com/hottopics/mscode/layo...
        - Line 22, column 1, TABLE element
    - Page contains no tables.
      - http://www.lexisnexis.com/hottopics/mscode/
      - http://www.lexisnexis.com/hottopics/mscode/blan...
- 1194.22(j)

  Pages shall be designed to avoid causing the screen to flicker with a frequency greater than 2 Hz and lower than 55 Hz.

  - j.2 Until user agents allow users to control blinki...
    - Page may contain elements that cause blinking.
      - http://www.lexisnexis.com/hottopics/mscode/
      - http://www.lexisnexis.com/hottopics/mscode/bann...
      - http://www.lexisnexis.com/hottopics/mscode/layo...
    - Page does not contain elements that can cause blinking.
      - http://www.lexisnexis.com/hottopics/mscode/blan...
  - j.1 Pages are required not to contain the BLINK ele...
    - Page does not contain a BLINK element.
      - http://www.lexisnexis.com/hottopics/mscode/
      - http://www.lexisnexis.com/hottopics/mscode/bann...
      - http://www.lexisnexis.com/hottopics/mscode/blan...
      - http://www.lexisnexis.com/hottopics/mscode/layo...
- 1194.22(k)

  A text-only page, with equivalent information or functionality, shall be provided to make a web site comply with the provisions of this part, when compliance cannot be accomplished in any other way. The content of the text-only page shall be updated whenever the primary page changes.

  - k.1 Check for a 'Text Only Version' link that provi...

If a Text Only Equivalent of a page is provided it must be updated every time the primary content changes. This checkpoint typically gets marked N/A because there are sufficient techniques for making complex web content accessible. This checkpoint may need to be customized.

- Verify if text only version is necessary for page
  - http://www.lexisnexis.com/hottopics/mscode/
  - http://www.lexisnexis.com/hottopics/mscode/bann...
  - http://www.lexisnexis.com/hottopics/mscode/blan...
  - http://www.lexisnexis.com/hottopics/mscode/layo...

- 1194.22(l)

When pages utilize scripting languages to display content, or to create interface elements, the information provided by the script shall be identified with functional text that can be read by assistive technology.

- l.1 Verify information provided by scripts shall be...
  - Verify that script is invokable or have textual representation
    - http://www.lexisnexis.com/hottopics/mscode/
    - http://www.lexisnexis.com/hottopics/mscode/bann...
    - http://www.lexisnexis.com/hottopics/mscode/layo...
  - No scripts used on page
    - http://www.lexisnexis.com/hottopics/mscode/blan...

- 1194.22(p)

When a timed response is required, the user shall be alerted and given sufficient time to indicate more time is required.

- p.2 Allow users to complete an activity without any...

The objective of this technique is to provide users with all the time they need to complete an activity. This technique involves providing a specified activity which does not require timed interaction. Users are allowed as much time as they need to interact with the activity.

  - Verify purpose of timeout. Usability test to ensure that user can complete activity without time limit
    - http://www.lexisnexis.com/hottopics/mscode/
      - Line 7, column 1, SCRIPT element, SRC = "http://www.lexi...jslib/jquery/jquery-1.2.6.min.js"
    - http://www.lexisnexis.com/hottopics/mscode/bann...
      - Line 7, column 1, SCRIPT element, SRC = "http://www.lexisnexis.com/clients/jslib/utils.js"
    - http://www.lexisnexis.com/hottopics/mscode/layo...
      - Line 9, column 1, SCRIPT element, SRC = "http://www.lexisnexis.com/clients/jslib/utils.js"
  - Page does not contain timeouts
    - http://www.lexisnexis.com/hottopics/mscode/blan...
- p.1 Pages are required not to use the META element ...

Until user agents provide the ability to stop the refresh, do not create periodically auto-refreshing pages.

  - Page does not contain the META element.
    - http://www.lexisnexis.com/hottopics/mscode/
    - http://www.lexisnexis.com/hottopics/mscode/bann...
    - http://www.lexisnexis.com/hottopics/mscode/blan...
    - http://www.lexisnexis.com/hottopics/mscode/layo...

- 1194.22(e)

Redundant text links shall be provided for each active region of a server-side image map.

- e.2 No INPUT element should contain the USEMAP attr...
  - No INPUT element contains an USEMAP attribute.
    - http://www.lexisnexis.com/hottopics/mscode/layo...
  - Page does not contain INPUT elements.
    - http://www.lexisnexis.com/hottopics/mscode/
    - http://www.lexisnexis.com/hottopics/mscode/bann...
    - http://www.lexisnexis.com/hottopics/mscode/blan...
- e.1 Locate any IMG element that contains the ISMAP ...

If you must use a server-side image map, provide redundant text links for each active region. You should use client-side image maps where possible.

  - Page does not use server-side maps.
    - http://www.lexisnexis.com/hottopics/mscode/
    - http://www.lexisnexis.com/hottopics/mscode/bann...
    - http://www.lexisnexis.com/hottopics/mscode/blan...

- http://www.lexisnexis.com/hottopics/mscode/layo...

- 1194.22(f)

  Client-side image maps shall be provided instead of server-side image maps except where the regions cannot be defined with an available geometric shape.

  - f.2 No IMG element should contain the ISMAP attribute
    - No IMG element contains an ISMAP attribute.
      - http://www.lexisnexis.com/hottopics/mscode/bann...
    - Page does not contain IMG elements.
      - http://www.lexisnexis.com/hottopics/mscode/
      - http://www.lexisnexis.com/hottopics/mscode/blan...
      - http://www.lexisnexis.com/hottopics/mscode/layo...
  - f.3 No INPUT element should contain the ISMAP attri...
    - No INPUT element contains an ISMAP attribute.
      - http://www.lexisnexis.com/hottopics/mscode/layo...
    - Page does not contain INPUT elements.
      - http://www.lexisnexis.com/hottopics/mscode/
      - http://www.lexisnexis.com/hottopics/mscode/bann...
      - http://www.lexisnexis.com/hottopics/mscode/blan...
  - f.1 All AREA elements are required to have the ALT ...

    Client-side image maps present functionality that is not available to all users. The ALT attribute can be used for AREA elements to provide a text equivalent.

    - Page has no AREA elements.
      - http://www.lexisnexis.com/hottopics/mscode/
      - http://www.lexisnexis.com/hottopics/mscode/bann...
      - http://www.lexisnexis.com/hottopics/mscode/blan...
      - http://www.lexisnexis.com/hottopics/mscode/layo...

- 1194.22(n)

  When electronic forms are designed to be completed on-line, the form shall allow people using assistive technology to access the information, field elements, and functionality required for completion and submission of the form, including all directions and cues.

  - n.5 Ensure that all LABEL 'FOR' attributes match an...
    - LABEL element 'FOR' attribute has unique ID's and matches all controls.
      - http://www.lexisnexis.com/hottopics/mscode/
      - http://www.lexisnexis.com/hottopics/mscode/bann...
      - http://www.lexisnexis.com/hottopics/mscode/blan...
      - http://www.lexisnexis.com/hottopics/mscode/layo...
  - n.1 Identify all LABEL elements used within FORM el...

    Until user agents support explicit associations between labels and form controls, for all form controls with implicitly associated labels, ensure that the label is properly positioned.

    - Page does not contain FORM elements.
      - http://www.lexisnexis.com/hottopics/mscode/
      - http://www.lexisnexis.com/hottopics/mscode/bann...
      - http://www.lexisnexis.com/hottopics/mscode/blan...
      - http://www.lexisnexis.com/hottopics/mscode/layo...
  - n.2 All INPUT elements are required to contain the ...

    All visible INPUT elements must have a label, either by using a linked or containing LABEL element, or by using the ALT or TITLE attribute. Buttons are considered to be self-labeling.

    - No relevant INPUT elements found in document.
      - http://www.lexisnexis.com/hottopics/mscode/
      - http://www.lexisnexis.com/hottopics/mscode/bann...
      - http://www.lexisnexis.com/hottopics/mscode/blan...
      - http://www.lexisnexis.com/hottopics/mscode/layo...
  - n.3 Associate labels explicitly with their controls...

    All SELECT elements must have a label, either by using a linked or containing LABEL element, or by using the TITLE or ALT attribute.

    - No SELECT elements were found.
      - http://www.lexisnexis.com/hottopics/mscode/
      - http://www.lexisnexis.com/hottopics/mscode/bann...
      - http://www.lexisnexis.com/hottopics/mscode/blan...
      - http://www.lexisnexis.com/hottopics/mscode/layo...

- h.4 Associate labels explicitly with their controls...

  All TEXTAREA elements must have a label, either by using a linked or containing LABEL element, or by using the TITLE or ALT attribute.

  - No TEXTAREA elements were found.
    - http://www.lexisnexis.com/hottopics/mscode/
    - http://www.lexisnexis.com/hottopics/mscode/bann...
    - http://www.lexisnexis.com/hottopics/mscode/blan...
    - http://www.lexisnexis.com/hottopics/mscode/layo...

- 1194.22(b)

  Equivalent alternatives for any multimedia presentation shall be synchronized with the presentation.

  - b.1 Identify all OBJECT Elements that have a multim...

    For any time-based multimedia presentation (e.g., a movie or animation), synchronize equivalent alternatives (e.g., captions or auditory descriptions of the visual track) with the presentation.

    - Page does not have OBJECT elements.
      - http://www.lexisnexis.com/hottopics/mscode/
      - http://www.lexisnexis.com/hottopics/mscode/bann...
      - http://www.lexisnexis.com/hottopics/mscode/blan...
      - http://www.lexisnexis.com/hottopics/mscode/layo...
  - b.2 Identify all OBJECT Elements that have a DATA a...
    - Page does not contain OBJECT elements using known multimedia file extensions.
      - http://www.lexisnexis.com/hottopics/mscode/
      - http://www.lexisnexis.com/hottopics/mscode/bann...
      - http://www.lexisnexis.com/hottopics/mscode/blan...
      - http://www.lexisnexis.com/hottopics/mscode/layo...
  - b.3 Identify all EMBED elements that have a SRC att...
    - Page does not contain EMBED elements using a known multimedia file extension.
      - http://www.lexisnexis.com/hottopics/mscode/
      - http://www.lexisnexis.com/hottopics/mscode/bann...
      - http://www.lexisnexis.com/hottopics/mscode/blan...
      - http://www.lexisnexis.com/hottopics/mscode/layo...
  - b.4 Identify all links that have an HREF attribute ...

    For any time-based multimedia presentation (e.g., a movie or animation), synchronize equivalent alternatives (e.g., captions or auditory descriptions of the visual track) with the presentation.

    - Page does not contain links referring to any known multimedia file extension.
      - http://www.lexisnexis.com/hottopics/mscode/
      - http://www.lexisnexis.com/hottopics/mscode/bann...
      - http://www.lexisnexis.com/hottopics/mscode/blan...
      - http://www.lexisnexis.com/hottopics/mscode/layo...

- 1194.22(h)

  Markup shall be used to associate data cells and header cells for data tables that have two or more logical levels of row or column headers.

  - h.1 For data tables that have two or more logical l...

    Describe the table structure using the SUMMARY attribute. Identify structural groups of rows using THEAD, TFOOT, TBODY, COLGROUP and COL. Label table elements with the "scope", "headers", and "axis" attributes to assist user agents.

    - Page does not contain complex data tables.
      - http://www.lexisnexis.com/hottopics/mscode/
      - http://www.lexisnexis.com/hottopics/mscode/bann...
      - http://www.lexisnexis.com/hottopics/mscode/blan...
      - http://www.lexisnexis.com/hottopics/mscode/layo...

- 1194.22(m)

  When a web page requires that an applet, plug-in or other application be present on the client system to interpret page content, the page must provide a link to a plug-in or applet that complies with §1194.21(a) through (l).

  - m.1 All pages that have links to files that require...

    This checkpoint may require customization.

    - Page does not contain links to files known to require a special reader.
      - http://www.lexisnexis.com/hottopics/mscode/
      - http://www.lexisnexis.com/hottopics/mscode/bann...

- http://www.lexisnexis.com/hottopics/mscode/blan...
- http://www.lexisnexis.com/hottopics/mscode/layo...

- 1194.22(o)

A method shall be provided that permits users to skip repetitive navigation links.

- o.1 Pages should contain a bookmark link to skip na...

This checkpoint may require customization.

- Page has no links.
  - http://www.lexisnexis.com/hottopics/mscode/
  - http://www.lexisnexis.com/hottopics/mscode/bann...
  - http://www.lexisnexis.com/hottopics/mscode/blan...
  - http://www.lexisnexis.com/hottopics/mscode/layo...

Total	7

EXHIBIT J

Google | Mississippi Code 1-1-8. Official code; recognition as evidence of public statute law

Web Images Maps Shopping More Search tools SafeSearch

Official code; recognition as evidence of public statute laws
https://law.resource.org/pub/us/code/ms/ms.xml.... 1/.../1-1-8/index.html
2010 **Mississippi Code** TITLE 1 - **LAWS** AND **STATUTES** Chapter 1 - Code of 1972. §- **1-1-8** - **Official code; recognition as evidence of public statute laws**; ...

[PDF] **Official** Version of the State **Statutes/Code** - National Conferenc...
www.ncsl.org/documents/lss/Official_Version_Statutes.pdf
Mississippi Code of 1972. Editor's note. See § **1-1-8**. **Official code; recognition** as **evidence of public statute laws**; restrictions on use of certain words or names in ...

Chapter 1 - **Code** of 1972 :: 2010 **Mississippi Code** :: US **Codes** an...
law.justia.com/... > TITLE 1 - LAWS AND STATUTES
1-1-8 - **Official code; recognition as evidence of public statute laws**; restrictions on use of certain words or names in title of **codes** other than official version. 1-1-9 ...

Results for similar searches

65 ILCS 5/ Illinois Municipal **Code** - Illinois General Assembly
www.ilga.gov/legislation/ilcs/ilcs5.asp?ActID=802&ChapterID=14
If the source note at the end of a Section of the **statutes** includes a **Public** Act that has not ... with the general election **law** and except where a provision in this **Code** is stated to apply ... **1-1-8**) Sec. **1-1-8**. Whenever this **Code** requires or authorizes the submission of a ... (1) hearing testimony and accepting **evidence** that is ...
More results for:
mississippi code 1 1 8 official code recognition as evidence of public statute laws

Ads related to **Mississippi Code 1-1-8. Official code** ...

Mississippi code
www.findlaw.com/State-Laws
Search Popular **State**-Specific **Laws**, Regulations, **Codes** & Practice Areas. Leases and Rental Agreements - Probate Laws - Minimum Wage - Find a Lawyer

Statute Codes
www.ask.com/Statute+Codes
Search for **Statute Codes**. Look Up Quick Results now!

Goooooogle >
1 2 3 4 5 6 Next

EXHIBIT K

Close

LexisNexis PRINT PAGE

1999

Mississippi Code of 1972 Annotated

$613.00

Your Price: $613.00

Publisher: Michie
Format: 32 volumes, hardbound, with current supplement , BOOK
ISBN: 9780327096283

Description

Note: The price displayed for this product is for customers residing in Mississippi. Out-of-State customers please call 1-800-223-1940 for specific pricing information.

Be sure that the law you read is the law indeed
Official isn't just a word. It's a process. The Mississippi Joint Legislative Committee on Compilation, Revision and Publication of Legislation maintains careful editorial control over the publication of the official code, from the moment LexisNexis receives the acts to the final galley proofs of the finished product. Their strict supervision ensures that the published code and its supplements contain no errors in content, conform carefully to the numbering scheme, and publish in a timely manner.

Cite the code that's guaranteed to be right
Because it's official, you can rely on LexisNexis' Mississippi Code of 1972 Annotated for the correct statement of the law, whether you get it on CD, in print, or online through LexisNexis at lexis.com. Cite it with confidence; it's the original source supported by the state and guaranteed to be the accepted authority in the state court system. Don't bet on derivative sources created outside and distant from the process.

Rely on over 150 years of code publishing experience
The lawyer-editors who prepare the Mississippi Code of 1972 Annotated work in close cooperation with the Legislative Committee to provide you with the most accurate, comprehensive, and current statutory language available. They read and analyze every Mississippi and federal case construing the statutes and court rules, as well as opinions of the Attorney General and other administrative and regulatory agencies. They then create concise annotations that interpret the statutes, giving you insight into how courts apply your case's facts. Their efforts save you valuable research time by focusing only on cases that are on point, current, and relevant.

Table of Contents

27 volumes plus current cumulative supplement
The official state statutes, fully annotated
Mississippi Court Rules Annotated (replaced annually and supplemented semiannually)
Advance Legislative Service (ALS)
Advance Code Service (ACS)
Annotation Citator (Provides Shepard's treatment for all cases cited in annotations)
Brand new Index in 1999 - comprehensive, revised annually
Fully annotated cumulative supplements published annually within 90 days of receipt of all Acts.
Annotations based on:
All Mississippi Cases and Federal Cases arising in Mississippi
State Law Reviews
American Law Reports (ALR)
Attorney General Opinions
All case citations Shepardized for accuracy

Mississippi Code
Title 1. Laws And Statutes
Title 3. State Sovereignty, Jurisdiction And Holidays

Title 5. Legislative Department
Title 7. Executive Department
Title 9. Courts
Title 11. Civil Practice And Procedure
Title 13. Evidence, Process And Juries
Title 15. Limitations Of Actions And Prevention Of Frauds
Title 17. Local Government: Provisions Common To Counties And Municipalities
Title 19. Counties And County Officers
Title 21. Municipalities
Title 23. Elections
Title 25. Public Officers And Employees; Public Records
Title 27. Taxation And Finance
Title 29. Public Lands, Buildings And Property
Title 31. Public Business, Bonds And Obligations
Title 33. Military Affairs
Title 35. War Veterans And Pensions
Title 37. Education
Title 39. Libraries, Arts, Archives And History
Title 41. Public Health
Title 43. Public Welfare
Title 45. Public Safety And Good Order
Title 47. Prisons And Prisoners; Probation And Parole
Title 49. Conservation And Ecology
Title 51. Waters, Water Resources, Water Districts, Drainage; And Flood Control
Title 53. Oil, Gas, And Other Minerals
Title 55. Parks And Recreation
Title 57. Planning, Research And Development
Title 59. Ports, Harbors, Landings And Watercraft
Title 61. Aviation
Title 63. Motor Vehicles And Traffic Regulations
Title 65. Highways, Bridges And Ferries
Title 67. Alcoholic Beverages
Title 69. Agriculture, Horticulture, And Animals
Title 71. Labor And Industry
Title 73. Professions And Vocations
Title 75. Regulation Of Trade, Commerce And Investments
Title 77. Public Utilities And Carriers
Title 79. Corporations, Associations, And Partnerships
Title 81. Banks And Financial Institutions
Title 83. Insurance
Title 85. Debtor-Creditor Relationship
Title 87. Contracts And Contractual Relations
Title 89. Real And Personal Property
Title 91. Trusts And Estates
Title 93. Domestic Relations
Title 95. Torts
Title 97. Crimes
Title 99. Criminal Procedure

To order or for current pricing go to.
www.lexisnexis.com/store/us or call 1-800-223-1940

Price subject to change. Shipping, handling, and sales tax will be added where applicable. LexisNexis, the Knowledge Burst logo, and lexis.com are registered trademarks of Reed Elsevier Properties Inc., used under license. Matthew Bender is a registered trademark of Matthew Bender properties Inc. Other products or services may be trademarks or registered trademarks of their respective companies. Copyright 2013 LexisNexis, a division of Reed Elsevier Inc. All rights reserved. No part of these materials including graphics or logos, may be copied, photocopied, reproduced, translated or reduced to any electronic medium or machine-readable form, in whole or in part, without specific written permission of LexisNexis. Distribution for commercial purposes is prohibited.

EXHIBIT L

RESEARCH REFERENCES

CJS. C.J.S. Statutes §§ 270-272.

§ 1-1-8. Official code; recognition as evidence of public statute laws; restrictions on use of certain words or names in title of codes other than official version.

(1) The Mississippi Code of 1972 Annotated, as amended, modified and revised from time to time, that is published by the company with which the Joint Legislative Committee on Compilation, Revision and Publication of Legislation has contracted under Section 1-1-107(a):

(a) Is the official code of the public statute laws of the State of Mississippi that are enacted by the Legislature; and

(b) Shall be used, received, recognized and referred to as the official code of the public statute laws of the State of Mississippi, and shall be considered as evidence of the public statute laws of the State of Mississippi, in all courts of the State and by all public officers, offices, departments and agencies of the state and its political subdivisions, and in all other places or instances where the public statute laws of the State may come into question. However, if there is any conflict between the language of any statute as it appears in the Mississippi Code of 1972 Annotated and in the General Laws of Mississippi, the language in the General Laws shall control; and if there is any conflict between the language of any statute as it appears in the General Laws of Mississippi and in the original enrolled bills enacted by the Legislature, the language in the enrolled bills shall control.

(2) No publisher of a code of the public statute laws of the State of Mississippi, other than the publishing company with which the Joint Legislative Committee on Compilation, Revision and Publication of Legislation has contracted under Section 1-1-107(a), shall be authorized to use as the name, title or designation of the code that is published, the words "Mississippi Code of 1972," "Mississippi Code 1972," "Mississippi Code of 1972 Annotated," "Mississippi Code 1972 Annotated," "Annotated Mississippi Code of 1972," "Annotated Mississippi Code 1972," or any other combination of words containing "Code of 1972," "Code 1972" or "1972 Code." The joint committee may seek injunctive relief, or authorize the publisher of the official code to seek injunctive relief on behalf of the joint committee, against any person or entity to enforce the provisions of this subsection.

SOURCES: Laws, 1999, ch. 310, § 2, eff from and after passage (approved Mar. 8, 1999)

Cross References — Revised manuscript for Mississippi Code of 1972 declared to be official code of the State of Mississippi, see § 1-1-35.

Approval and acceptance of manuscript, see § 1-1-53.

Advance sheets; contract for publication; distribution; provision of information to publisher, see § 1-1-58.

General power and duties of Joint Legislative Committee on Compilation, Revision and Publication of Legislation, see § 1-1-107.

Authority of Joint Legislative Committee on Compilation, Revision, and Publication of Legislation relating to preparation of legislative acts for publication, see § 1-1-109.

Approval by Joint Legislative Committee on Compilation, Revision and Publication of Legislation of manuscripts of supplements and replacement volumes prepared by publishing company, see § 1-1-111.

RESEARCH REFERENCES

Law Reviews. Pre-1900 Mississippi Legal Authority, 73 Miss. L.J. 195, Fall, 2003.

§ 1-1-9. Copyright; use of code material.

(1) Copyrights of the Mississippi Code of 1972 and the notes, annotations, and indexes thereof, shall be taken by and in the name of the publishers of the compilation who shall thereafter promptly assign the same to the State of Mississippi and be owned by it.

(2) All parts of any act passed by the Mississippi Legislature, or of any code published or authorized to be published by the Joint Committee on Compilation, Revision and Publication of Legislation, including, without limitation, catchlines or frontal analyses; numbers assigned to sections, articles, chapters and titles; historical citations or source lines; editor's notes; amendment notes; cross references; annotations; and summaries of judicial decisions and Attorney General's opinions, shall become and remain the exclusive property of the State of Mississippi, to be used only as the joint committee may direct.

(3)(a) If any person or entity uses any part of any act passed by the Mississippi Legislature, or any part of any code published or authorized to be published by the joint committee, in any manner other than as authorized by the committee, the person or entity shall be subject to a civil penalty of not less than One Thousand Dollars ($1,000.00) for each violation, and each day upon which a violation occurs shall be deemed a separate and additional violation.

(b) If the joint committee suspects that any person or entity is violating or has violated this section, the Attorney General shall investigate the matter upon the request of the joint committee. If the Attorney General determines, after investigation, that the person or entity is violating or has violated this section, the Attorney General shall institute an action to impose a civil penalty against the person or entity, or seek injunctive relief against the person or entity to prevent further violations of this section, or both, as requested by the joint committee.

(c) Civil penalties may be recovered in a civil action brought by the Attorney General in the Chancery Court of the First Judicial District of Hinds County, Mississippi, or in the chancery court of the county of residence of the person or entity against whom the penalty is sought. If the person or entity is a nonresident of the State of Mississippi, the action shall be brought in the Chancery Court of the First Judicial District of Hinds County, Mississippi.

(d) All civil penalties recovered shall be deposited into the State General Fund.

SOURCES: Codes, 1942, § 8; Laws, 1942, ch. 318; Laws, 1996, ch. 502, § 8; Laws, 1998, ch. 546, § 2, eff from and after July 1, 1998.

Editor's Note — At its meeting on May 20, 1998, the Joint Legislative Committee on Compilation, Revision and Publication of Legislation adopted the following statement:

"It is not the intent of Section 1-1-9(2) to prohibit any person from citing or referring to Code section numbers, articles, chapters or titles, or to require any person to obtain permission of the joint committee before citing or referring to Code section numbers, articles, chapters or titles. If there is any concern that Section 1-1-9(2) does require such advance permission of the committee, the committee hereby authorizes any person to cite or refer to any Code section number, article, chapter or title at any time after June 30, 1998, without specific permission of the committee being required for such usage."

RESEARCH REFERENCES

CJS. C.J.S. Copyrights and Intellectual Property §§ 20, 27, 93.

§ 1-1-11. Distribution of the Code of 1972.

(1) Except as provided in subsection (2) of this section, the Joint Committee on Compilation, Revision and Publication of Legislation shall distribute or provide for the distribution of the sets of the compilation of the Mississippi Code of 1972 purchased by the state as follows:

Fifty-seven (57) sets to the Mississippi House of Representatives and forty (40) sets to the Mississippi Senate for the use of the Legislative Reference Bureau, Legislative Services Offices, staffs and committees thereof.

Ten (10) sets to the Governor's Office; nine (9) sets to the Secretary of State; and twenty (20) sets to the Auditor's Office.

One (1) set to each of the following: the Lieutenant Governor; each member of the Legislature; the Treasurer; each district attorney; each county attorney; each judge of the Court of Appeals and each judge of the Supreme, circuit, chancery, county, family, justice and municipal courts; each Mississippi Senator and Mississippi Representative in Congress; State Superintendent of Education; Director of the Department of Finance and Administration; six (6) sets to the Performance Evaluation and Expenditure Review (PEER) Committee, three (3) sets to the Director of the Legislative Budget Office; the Commissioner of Agriculture and Commerce; each Mississippi Transportation Commissioner; six (6) sets to the Department of Corrections; the Insurance Commissioner; the Clerk of the Supreme Court; the State Board of Health; each circuit clerk; each chancery clerk in the State for the use of the chancery clerk and the board of supervisors; each sheriff in the State for the use of his office and the county officers; and each county for the county library (and an additional set shall be given to each circuit clerk, chancery clerk, sheriff and county library in counties having two (2) judicial districts).

Two (2) sets to the Department of Archives and History; two (2) sets to the State Soil and Water Conservation Commission; sixty-eight (68) sets to the

Attorney General's Office; six (6) sets to the Public Service Commission; four (4) sets to the Public Utilities Staff; thirty-six (36) sets to the State Tax Commission; two (2) sets to the State Personnel Board; six (6) sets to the State Law Library; one (1) set to the Library of Congress; ten (10) sets to the University of Mississippi Law School; one (1) set each to the Mississippi School for the Deaf and the Mississippi School for the Blind; one (1) set each to the University of Mississippi, Mississippi State University, Mississippi University for Women, University of Southern Mississippi, Delta State University, Alcorn State University, Jackson State University, Mississippi Valley State University, and the Board of Trustees of State Institutions of Higher Learning; and one (1) set to the Supreme Court judges' conference room. In furtherance of the State Library's reciprocal program of code exchange with libraries of the several states, the joint committee shall, at the direction and only upon the written request of the State Librarian, distribute or provide for the distribution of sets of the code to such libraries.

One (1) set to each state junior or community college; three (3) sets to the Department of Wildlife, Fisheries and Parks; two (2) sets to the Department of Environmental Quality; two (2) sets to the Department of Marine Resources; two (2) sets to the Mississippi Ethics Commission; six (6) sets to the Mississippi Workers' Compensation Commission; four (4) sets to the State Department of Rehabilitation Services; and seven (7) sets to the Department of Human Services. One (1) set to each of the following: State Textbook Procurement Commission; University Medical Center; State Library Commission; Department of Agriculture and Commerce; Forestry Commission; and seventeen (17) sets to the Department of Public Safety. Also, one (1) set to each of the following: Adjutant General, Department of Economic and Community Development, Department of Banking and Consumer Finance, Bureau of Building, Grounds and Real Property Management, the State Educational Finance Commission, the Mississippi Board of Vocational and Technical Education, Division of Medicaid, State Board of Mental Health, and Department of Youth Services.

The joint committee is authorized to distribute or provide for the distribution of additional sets of the Mississippi Code, not to exceed three (3) sets, to the office of each district attorney for the use of his assistants.

The joint committee shall provide to the Mississippi House of Representatives and the Mississippi Senate the annual supplements to the Mississippi Code of 1972 for each set of the code maintained by the House and Senate.

The set of the Mississippi Code of 1972 to be provided to each member of the Legislature shall be provided unless specifically waived by such legislator in writing.

An elected or appointed officeholder in the State of Mississippi, except for a member of the Legislature, shall deliver to his successor in office, or to the joint committee if there is no successor, the set of the Mississippi Code of 1972 provided the officeholder under this section.

Before the joint committee delivers or provides for delivery of a copy of the Mississippi Code of 1972 to an individual officeholder, the joint committee shall

prepare and submit a written agreement to the officeholder. The agreement shall, among other provisions, state that the code is the property of the State of Mississippi, that it shall be transferred to the officeholder's successor in office, that the officeholder has an obligation to make such transfer and that the officeholder shall be responsible for the failure to deliver the code and for any damage or destruction to the code, normal wear and tear excepted. The joint committee shall execute the agreement and forward it to the officeholder for execution. The joint committee shall not deliver or provide for delivery of the code to the officeholder until the executed agreement is received by the committee. The joint committee may include in the agreement such other provisions as it may deem reasonable and necessary. In addition to damages or any other remedy for not transferring a set of the code to his successor, an officeholder who does not transfer his set of the code shall be guilty of a misdemeanor and shall, upon conviction, pay a fine of One Thousand Dollars ($1,000.00). Upon request of the joint committee, the Attorney General shall assist the joint committee in taking such actions as necessary to require an officeholder to transfer the set of code provided under this section to his successor, or to the joint committee if there is no successor, and to recover reimbursement or damages from any officeholder for the loss of or damage or destruction to any volumes of the set of the code provided under this section, other than normal wear and tear.

Replacement of missing, damaged or destroyed sets or volumes of the code provided by this chapter may be obtained from the code publisher through the joint committee at the established state cost, the cost to be borne by the recipient.

No more than one (1) set of the Mississippi Code of 1972 shall be furnished to any one (1) individual, regardless of the office or offices he may hold.

(2) The joint committee, in its discretion, may determine whether electronic access to the Mississippi Code of 1972 is available and a sufficient substitute for actual bound volumes of the code and, if so, may omit furnishing any one or more sets otherwise required by this section.

SOURCES: Codes, 1942, § 7; Laws, 1942, ch. 318; Laws, 1944, ch. 314; Laws, 1966, ch. 395, § 1; Laws, 1973, ch. 425, § 1; Laws, 1974, ch. 377; Laws, 1978, ch. 458, § 4; Laws, 1981, ch. 536, § 1; Laws, 1988, ch. 486, § 1; Laws, 1988, ch. 518, § 14; Laws, 1990, ch. 402, § 1; Laws, 1991, ch. 530, § 6; Laws, 1992, ch. 543, § 11; Laws, 1993, ch. 430, § 8; Laws, 1993, ch. 518, § 8; Laws, 1997, ch. 385, § 1; Laws, 1998, ch. 325, § 1; Laws, 1998, ch. 546, § 3; Laws, 1999, ch. 310, § 1; Laws, 2000, ch. 511, § 1; Laws, 2003, ch. 551, § 1, eff from and after July 1, 2003.

Editor's Note — Section 7-7-2 provides that the words "State Auditor of Public Accounts," "State Auditor," and "Auditor" appearing in the laws of this state in connection with the performance of Auditor's functions shall mean the State Fiscal Officer.

Section 27-104-6 provides that whenever the term "State Fiscal Officer" appears in any law it shall mean "Executive Director of the Department of Finance and Administration".

Section 37-43-2 provides that the State Board of Education shall assume all power, authority, duties and functions of the State Textbook Procurement Commission.

Section 37-45-3 provides that the State Educational Finance Commission shall be abolished and functions and duties transferred to the State Board of Education. Section 37-45-3 further provides that all references in laws of the state to "State Educational Finance Commission" or "commission", when referring to the Educational Finance Commission, shall be construed to mean the State Department of Education.

Laws, 1993, ch. 518, § 45, provides as follows:

"Section 32 of this act shall take effect and be in force from and after its passage and the remainder of this act shall take effect and be in force from and after July 2, 1993, or the date it is effectuated under Section 5 of the Voting Rights Act of 1965, as amended and extended, whichever is later."

The United States Attorney General, by letter dated July 13, 1993, interposed no objection, under Section 5 of the Voting Rights Act of 1965, to the amendment of this section by Laws, 1993, ch. 518, § 8.

The United States Attorney General, by letter dated August 17, 1995, interposed no objection, under Section 5 of the Voting Rights Act of 1965, to the amendment of this section by Laws, 1995, ch. 486, § 1.

Section 1 of ch. 325 Laws, 1998, effective from and after July 1, 1998 (approved March 12, 1998), amended this section. Section 3 of ch. 546, Laws, 1998, effective July 1, 1998 (approved April 1, 1998), also amended this section. As set out above, this section reflects the language of Section 3 of ch. 546, Laws, 1998, pursuant to Section 1-3-79 which provides that whenever the same section of law is amended by different bills during the same legislative session, and the effective dates of the amendments are the same, the amendment with the latest approval date shall supersede all other amendments to the same section approved on an earlier date.

Amendment Notes — The 2003 amendment substituted "three (3) sets" for "two (2) sets" preceding "to the Director of the Legislative Budget Office" in the fourth paragraph of (1).

Cross References — Purchase and distribution of pocket part supplements and replacement bound volumes by Secretary of State, see § 1-1-57.

Imposition of standard state assessment in addition to all court imposed fines or other penalties for any misdemeanor violation, see § 99-19-73.

§ 1-1-12. Binding and identification of state-owned copies of Code of 1972.

The sets of the Mississippi Code of 1972 purchased by the State to be distributed by the joint committee according to the designation in Section 1-1-11 shall be bound in a different color binding from that used in binding sets offered for sale to private purchasers. In addition to the distinctive color, the binding of each volume shall have stamped thereon in a contrasting color the words "Property of the State of Mississippi." Each of such sets of the Code as distributed shall be for use of the official in his official business and shall be returned to the state when the official vacates the office or when the office is abolished, as provided in Section 1-1-11. However, none of the provisions of this section shall apply to those sets to be distributed to members of the Legislature.

SOURCES: Codes, 1942, § 7.5; Laws, 1972, ch. 412, § 1; Laws, 1973, ch. 425, § 2; Laws, 1998, ch. 546, § 19, eff from and after July 1, 1998.

§ 1-1-13. When Code of 1972 to take effect.

The Mississippi Code of 1972, except as expressly provided, shall take effect on the first day of November, one thousand nine hundred and seventy-three, and from that day it shall be received in use, and shall supersede all prior statutes and clauses therein revised, and hereby repealed.

SOURCES: Codes, 1857, ch. 1, art. 2; 1871, § 8; 1880, § 2; 1892, § 2; Laws, 1906, § 2; Laws, 1930, § 2; Laws, 1942, § 13.

JUDICIAL DECISIONS

1. In general.

Former statute making it an offense to keep, have in possession, sell or give away intoxicating liquor, and providing for gradation of punishment for repeating offenders, notwithstanding repeal under this section, must be considered by way of aid to a proper construction or interpretation of the revised abridgment which took its place. Millwood v. State, 190 Miss. 750, 1 So. 2d 582 (1941), aff'd, 6 So. 2d 619 (Miss. 1942).

Words omitted in the publication of the code, and which are contained in the copy on file in the office of the secretary of state, must control in the construction of the statute. Nugent v. Mayor of Jackson, 72 Miss. 1040, 18 So. 493 (1895).

A purely local act, devised to meet the needs of a single community, was not repealed by a similar provision (Code of 1892). Jones v. Melchoir, 71 Miss. 115, 13 So. 857 (1893); Adams v. Dendy, 82 Miss. 135, 33 So. 843 (1903).

RESEARCH REFERENCES

Am Jur. 73 Am. Jur. 2d, Statutes §§ 252 et seq.

CJS. C.J.S. Statutes §§ 388, 390.

§ 1-1-15. Repealed.

Repealed by Laws, 1999, ch. 310, § 3, eff from and after March 8, 1999.

[Codes, 1857, ch. 1, art. 13; 1871, § 12; 1880, § 9; 1892, § 9; Laws 1906, § 9; Laws 1930, § 9; Laws 1942, §§ 9, 20; Laws, 1942, ch. 318]

Editor's Note — Former § 1-1-15 provided that the Mississippi Code of 1972, when published pursuant to the contract authorized by § 1-1-1, was evidence of the statute laws of this State. For present provisions, see § 1-1-8.

§ 1-1-17. Appropriations.

The cost of the recodification of the laws of Mississippi will be provided by appropriations to implement the purposes of Sections 1-1-1, 1-1-3 and 1-1-5.

SOURCES: Codes, 1942, § 21-04; Laws, 1970, ch. 465, § 4, eff from and after passage (approved April 6, 1970).

Editor's Note — Section 1-1-1 referred to in this section was repealed by Laws, 1996, ch. 502, § 21, eff from and after passage (approved April 11, 1996).

Cross References — For another section derived from same 1942 code section, see § 1-1-7.

§ 1-1-19. Repeal of former statutes — Effect of Code of 1972 upon laws enacted at same session or before Code takes effect.

From and after the effective date of the Mississippi Code of 1972, subject to any express provisions relating thereto which may be found in the Mississippi Code of 1972, all acts or parts of acts, all sections or parts of sections of the Mississippi Code of 1930, and all sections or parts of sections of the Mississippi Code of 1942, Recompiled, the subjects whereof are revised, consolidated and re-enacted in the Mississippi Code of 1972, or repugnant to the provisions contained therein, shall be, and the same are hereby, repealed, but with respect to statutes brought forward in the Mississippi Code of 1972, that code shall be deemed to be a continuation and not a new enactment. It is especially provided, however, that no curative or validation statute, of any nature or kind whatsoever, shall be affected by the adoption of the Mississippi Code of 1972, in so far as the curative or validation provisions or portions of any such statute are concerned.

Notwithstanding the provisions of the first paragraph of this section, no section or provision of the Mississippi Code of 1972 shall supersede or repeal by implication any law passed at the same session of the legislature at which the Mississippi Code of 1972 is adopted, or passed after the adoption of the Mississippi Code of 1972 but before it shall have taken effect; and an amendatory law passed at such session or at any subsequent session before the Mississippi Code of 1972 takes effect shall not be deemed repealed, unless the contrary intent clearly appears.

Any amendment to any section or sections of the Mississippi Code of 1942, Recompiled, or to any part or parts of acts, the subjects of which are revised, consolidated and enacted in the Mississippi Code of 1972, passed at the same session at which the Mississippi Code of 1972 is adopted, or passed after the adoption of the Mississippi Code of 1972 but before it shall take effect, shall be deemed to amend the corresponding section or sections of the Mississippi Code of 1972.

SOURCES: Codes, 1857, ch. 1, art. 3; 1871, § 9; 1880, § 3; 1892, § 3; Laws, 1906, § 3; Laws, 1930, § 3; Laws, 1942, § 14.

JUDICIAL DECISIONS

1. In general.

Where statute, authorizing circuit judge to determine, in vacation, appeals from county court, was omitted, because considered unconstitutional, from Code taking effect subsequent to statute, though statute and Act adopting Code were approved by Governor on same day, statute held not in force after effective date of Code. Rackley v. State, 166 Miss. 287, 146 So. 459 (1933).

Laws in force at the time of the adoption of the Code of 1892, having been revised, consolidated and re-enacted in that code, are repealed. State v. Jenkins, 73 Miss. 523, 19 So. 206 (1895); Nugent v. Mayor of Jackson, 72 Miss. 1040, 18 So. 493 (1895).

Under § 3 Code of 1892, which repeals the acts and parts of acts, "subjects" whereof are revised, consolidated and re-enacted in said code, the subject matter is to be determined with reference to the

PUBLIC.RESOURCE.ORG ~ *A Nonprofit Corporation*

Public Works for a Better Government

May 30, 2013

Hon. David Ralston
Speaker of the House
Georgia House of Representatives
332 State Capitol
Atlanta, GA 30334

Mr. Wayne R. Allen, Legislative Counsel
Office of Legislative Counsel
Georgia General Assembly
3021 State Capitol
Atlanta, GA 30334

Dear Speaker Ralston and Mr. Allen:

I am pleased to enclose for your consideration a George Washington USB Thumb Drive containing a scanned version of the Official Code of Georgia Annotated as well as XML-encoded versions of the code. Our purpose in making these statutes available is to promote access to the law by citizens and to promote innovation in ways the statutes are made available so that public servants, members of the bar, citizens, and members of the business community have ready access to the laws that govern them.

Access to the law is a fundamental aspect of our system of democracy, an essential element of due process, equal protection, and access to justice. The Supreme Court of the United States has repeatedly reaffirmed this principle, stating for example in Banks v. Manchester (128 U.S. 244, 1888) that "the authentic exposition and interpretation of the law, which, binding every citizen, is free for publication to all, whether it is a declaration of unwritten law, or an interpretation of a constitution or a statute."

The fact that there is no copyright in the law has been affirmed as a statement of policy by the United States Copyright Office which stated "Edicts of government, such as judicial opinions, administrative rulings, legislative enactments, public ordinances, and similar official legal documents are not copyrightable for reasons of public policy. This applies to such works whether they are Federal, State, or local as well as to those of foreign governments."

I would be pleased to answer any questions you may have and look forward to better access to the law by the citizens of Georgia.

Sincerely yours,

Carl Malamud
Public.Resource.Org

carl@media.org 1005 GRAVENSTEIN HIGHWAY NORTH, SEBASTOPOL, CALIFORNIA 95472 • PH: (707) 829-5290 • FX: (707) 829-0104

The General Assembly

Atlanta, Georgia 30334

July 25, 2013

Carl Malamud
Public.Resource.Org
1005 Gravenstein Highway North
Sebastopol, California 95472

VIA CERTIFIED MAIL

Dear Mr. Malamud:

On behalf of the Georgia Code Revision Commission, we are writing to notify you that your unlawful copying of the Official Code of Georgia Annotated infringes upon the exclusive copyright of the State of Georgia. Accordingly, you are hereby directed to

CEASE AND DESIST ALL COPYRIGHT INFRINGEMENT.

The State of Georgia, acting through the Georgia Code Revision Commission, is the owner of a copyright in various aspects of the Official Code of Georgia Annotated. Under United States copyright law, the State of Georgia's copyright has been in effect since the original date of creation of such official Code in 1983. All copyrightable aspects of the Official Code of Georgia Annotated are copyrighted under United States copyright law. The state asserts no copyright in the statutory text itself or in the numbering of the Code sections.

We received your letter dated May 30, 2013, to Honorable David Ralston, Speaker of the House of Representatives of Georgia, and Mr. Wayne Allen, Legislative Counsel for the Georgia General Assembly, containing notice that you have scanned the Official Code of Georgia Annotated, as evidenced by the USB Thumb Drive which was enclosed with the letter. It has also come to our attention that such files can be freely accessed from the internet (https://law.resource.org/pub/us/code/ga/georgia.scan.2012/) with no restrictions to its access.

Therefore, we demand that you immediately: (a) cease and desist your unlawful copying of the Official Code of Georgia Annotated; (b) remove any and all files containing the Official Code of Georgia Annotated from the internet; (c) destroy any and all files containing the Official Code of Georgia Annotated from the internet; and (d) provide us with prompt written assurance within 10 days of receiving this letter that all such steps have been taken and that you will cease and desist from any further infringement of the copyrighted Official Code of Georgia Annotated.

If you do not comply with this cease and desist demand within this time period, the State of Georgia, through the Georgia Code Revision Commission, is entitled to use your failure to comply as evidence of willful infringement and seek monetary damages and equitable relief for your copyright infringement.

For your information, the unannotated Georgia Code, including Code section designations and headings, is available to the public at no charge at www.legis.ga.gov.

If you are represented by legal counsel, please direct this letter to your attorney immediately and have your attorney notify us of such representation.

Sincerely,

Chairman Josh McKoon
Georgia Code Revision Commission

cc: Code Commission members

The General Assembly

Atlanta, Georgia 30334

August 15, 2013

Carl Malamud
Public.Resource.Org
1005 Gravenstein Highway North
Sebastopol, California 95472

VIA CERTIFIED MAIL

Dear Mr. Malamud:

We have received your response dated July 30, 2013, refusing to comply with the cease and desist letter sent on behalf of the Georgia Code Revision Commission on July 25, 2013, regarding your unlawful copying of the Official Code of Georgia Annotated. The response received was unacceptable.

Your response includes a misstatement or misunderstanding of federal copyright law. As indicated in the prior letter, the State of Georgia already makes the entire body of statutory law in Georgia available to the public at no charge at www.legis.ga.gov. This is wholly different from the product produced by Lexis, the state's publisher, which includes additional value-added material which is subject to copyright protection.

Therefore, we again demand that you immediately: (a) cease and desist your unlawful copying of the Official Code of Georgia Annotated; (b) remove any and all files containing the Official Code of Georgia Annotated from the internet; (c) destroy any and all files containing the Official Code of Georgia Annotated from the internet; and (d) provide us with prompt written assurance within 5 days of receiving this letter that all such steps have been taken and that you will cease and desist from any further infringement of the copyrighted Official Code of Georgia Annotated.

If you fail to comply with this letter, the Georgia Code Revision Commission intends to pursue all available remedies, including but not limited to, preliminary and permanent injunctions, damages, and costs and attorney's fees associated with defending the state's rights for copyright violation under the Copyright Act of 1976.

Sincerely,

Chairman Josh McKoon
Georgia Code Revision Commission

cc: Code Commission members

HAWLEY TROXELL

ATTORNEYS AND COUNSELORS
Hawley Troxell Ennis & Hawley LLP
877 Main Street, Suite 1000
P.O. Box 1617
Boise, Idaho 83701-1617
208.344.6000
www.hawleytroxell.com

BRADLEE R. FRAZER
ADMITTED TO PRACTICE LAW IN IDAHO
EMAIL: bfrazer@hawleytroxell.com
DIRECT DIAL 208.388.4875
DIRECT FAX 208.954.5216

July 12, 2013

Via Facsimile to: (707) 829-0104 and
Via Email to: carl@media.org and
Via U.S. Mail, Certified, Return Receipt Requested

Carl Malamud, President
Public.Resource.Org, Inc.
1005 Gravenstein Hwy. N
Sebastopol, CA 95472

RE: *DMCA Notice of Copyright Infringement at Public.Resource.Org*

Dear Mr. Malamud:

We act as intellectual property counsel to the State of Idaho, its agency the Idaho Code Commission and the Secretary of State, a constitutional executive officer of the State of Idaho (collectively, "**Idaho**") and write to you relative to acts of copyright infringement on a website that is either on your servers, in your network, or within your control. This letter is directed to you as the ostensible Digital Millennium Copyright Act ("**DMCA**") Designated Agent for sites located under the domain name resource.org, based on filings here: http://www.copyright.gov/onlinesp/agents/p/publicresorg.pdf and information here: https://public.resource.org/copyright_policy.html. This is, accordingly, a Take-Down Notice issued pursuant to 17 U.S.C. Section 512(c)(3), which is part of the DMCA.

By way of background, Idaho owns the copyright in and to certain statutory compilations and the associated and accompanying analyses, summaries and reference materials (collectively, the "**Idaho Code**"). We discovered[1] that unauthorized PDFs containing scans of the Idaho Code

[1] Our discovery was admittedly aided by your May 30, 2013, letter, a copy of which is here: https://law.resource.org/pub/us/code/id/idaho.letter.pdf.

appear, *inter alia*, in directories located at https://law.resource.org/pub/us/code/id/idaho.scan.2012/. A specific example of one such scan may be found at https://law.resource.org/pub/us/code/id/idaho.scan.2012/gov.law.id.code.07.13.s.2012.pdf. For illustration, selected pages from that file are enclosed herewith as Exhibit One.

You will note that certain specific sections in Exhibit One are enclosed within red boxes; the rest are not. The portions within red boxes illustrate the underlying, native statutory content that Idaho acknowledges may be used under license.[2] The other content not within red boxes and similar content located in each corollary file contained in the directory at https://law.resource.org/pub/us/code/id/idaho.scan.2012/ constitute the analyses, summaries and reference materials mentioned above. To be clear, Idaho claims copyright in both the native statutory content and the analyses, summaries and reference materials contained in the linked directories (defined above as the Idaho Code) and as to which Exhibit One acts as an exemplar, and both are subject to this Notice.[3]

Accordingly, pursuant to the DMCA, we hereby provide Resource.org as the DMCA Service Provider and you as the DMCA Designated Agent with the following notification:

> (1) Certain infringing content residing on your servers or within your network has infringed and continues to infringe copyrighted works, specifically, the above-defined Idaho Code, to which Idaho owns the exclusive right to reproduce, adapt, display and distribute;
>
> (2) Exact scans of the Idaho Code are currently reproduced, adapted, displayed and distributed through the public.resource.org site as set forth above, all of which are literal or substantially similar copies of works to which Idaho owns exclusive rights to reproduce, adapt, display and distribute;
>
> (3) We believe in good faith that: (a) the material described in subparagraph (2) above infringes the copyrights in the materials described in subparagraph (1) above, and that (b) neither your nor public.resource.org's reproduction, adaptation, display and distribution of the materials described in subparagraph (1) above is authorized by Idaho, its agents or the law;

---

[2] We understand your position to be that such is not subject to copyright protection at all.

[3] To the extent similar content is contained in the .xml files located in the directories here: https://law.resource.org/pub/us/code/id/idaho.scan.2012/ and here: https://law.resource.org/pub/us/code/id/idaho.xml.2012/, such content is also covered by this Notice.

(4) The undersigned states that the information in this notification is accurate, and under penalty of perjury, that the undersigned is authorized to act on behalf of Idaho, who owns the exclusive rights to reproduce, adapt, display and distribute the infringed material described in subparagraph (2) above; and

(5) You may contact me at the address stated above.

Pursuant to the DMCA, your expeditious removal of or prevention of access to the Idaho Code, as defined, may result in limiting your liability for your possible direct involvement in and/or contribution to the above-described acts of copyright infringement. We look forward to your compliance herewith by expeditiously suspending or disabling access to the Idaho Code, as required by the DMCA. Please provide your response to me (if anything other than the required "expeditious" removal action) within five (5) business days of the date of this letter.

Please know that we would grant a royalty-free copyright license to Resource.org to reproduce and display the native, underlying statutory code content such as that which is found here: http://legislature.idaho.gov/idstat/TOC/IDStatutesTOC.htm and that which is within the red boxes in Exhibit One, and we can provide the electronic files to permit you to post that code. Having said that, the continuing reproduction and display of the Idaho Code as defined here, including the analyses, summaries and reference material, will not be tolerated, and Idaho reserves its rights to seek redress in federal court against the recipients of this letter to protect its intellectual property rights. In any such action, Idaho may seek to recover actual or statutory damages, attorney's fees and injunctive relief.

Sincerely,
HAWLEY TROXELL ENNIS & HAWLEY LLP

/S/ BRADLEE R FRAZER ELECTRONIC
SIGNATURE FOR EMAIL PDF COPY

Bradlee R. Frazer

BRF/bf
cc: Client

Enclosures

Carl Malamud
July 12, 2013
Page 4

EXHIBIT ONE

2012 CUMULATIVE POCKET SUPPLEMENT

IDAHO CODE

Compiled Under the Supervision of the
Idaho Code Commission

RICHARD F. GOODSON
R. DANIEL BOWEN JEREMY P. PISCA
COMMISSIONERS

MAX M. SHEILS, JR.
EXECUTIVE SECRETARY

TITLES 7-13

Place this supplement in the pocket of the corresponding volume of the set

MICHIE

701 East Water Street
Charlottesville, VA 22902

www.lexisnexis.com

Customer Service: 1-800-833-9844

LexisNexis and the Knowledge Burst logo are registered trademarks, and MICHIE is a trademark of Reed Elsevier Properties Inc., used under license. Matthew Bender is a registered trademark of Matthew Bender Properties Inc.

© 2012 State of Idaho
All rights reserved.

5058311

ISBN 978-0-672-83888-0 (Set)
ISBN 978-1-4224-6373-4

PUBLISHER'S NOTE

Amendments to laws and new laws enacted since the publication of the bound volume down to and including the 2012 regular session are compiled in this supplement and will be found under their appropriate section numbers.

This publication contains annotations taken from decisions of the Idaho Supreme Court and the Court of Appeals and the appropriate federal courts. These cases will be printed in the following reports:

Idaho Reports
Pacific Reporter, 3rd Series
Federal Supplement, 2nd Series
Federal Reporter, 3rd Series
United States Supreme Court Reports, Lawyers' Edition, 2nd Series

Title and chapter analyses, in these supplements, carry only laws that have been amended or new laws. Old sections that have nothing but annotations are not included in the analyses.

Following is an explanation of the abbreviations of the Court Rules used throughout the Idaho Code.

I.R.C.P.	Idaho Rules of Civil Procedure
I.R.E.	Idaho Rules of Evidence
I.C.R.	Idaho Criminal Rules
M.C.R.	Misdemeanor Criminal Rules
I.I.R.	Idaho Infraction Rules
I.J.R.	Idaho Juvenile Rules
I.C.A.R.	Idaho Court Administrative Rules
I.A.R.	Idaho Appellate Rules

If you have any questions or suggestions concerning the Idaho Code, please write or call toll free 1-800-833-9844, fax toll free at 1-800-643-1280, or email us at customer.support@bender.com.

Visit our website at http://www.lexisnexis.com for an online bookstore, technical support, customer service, and other company information.

LexisNexis
Attn: Customer Service
1275 Broadway
Albany, NY 12204-2694

ALWAYS CONSULT THE LATEST SUPPLEMENT IN CONNECTION WITH THE PERMANENT VOLUME

Carl Malamud
July 12, 2013
Page 7

TITLE 7

SPECIAL PROCEEDINGS

CHAPTER.
6. Contempts. § 7-602.

CHAPTER 4

WRITS OF PROHIBITION

7-402. When and how issued.

JUDICIAL DECISIONS

Adequacy of Other Remedy.
Idaho department of land's motion to dismiss the attorney general's writ of prohibition was granted, as there was a plain, speedy, and adequate remedy in the ordinary course of law, such that an extraordinary writ of prohibition would be improper. Injunctive relief would be at least as effective as issuance of the writ, if not more so. State v. Idaho State Bd. of Land Comm'rs (In re Verified Petition), 150 Idaho 547, 249 P.3d 346 (2010).

CHAPTER 6

CONTEMPTS

SECTION.
7-602. Reentry of dispossessed person on real property — Procedure upon conviction.

7-602. Reentry of dispossessed person on real property — Procedure upon conviction. — Every person dispossessed or ejected from or out of any real property by the judgment or process of any court of competent jurisdiction, and who, not having right so to do, reenters into or upon, or takes possession of, any such real property, or induces or procures any person not having right so to do, or aids or abets him therein, is guilty of a contempt of the court by which such judgment was rendered, or from which such process issued. Upon a conviction for such contempt the court shall immediately issue an alias process directed to the proper officer, and requiring him to restore the party entitled to the possession of such property under the original judgment or process, to such possession.

History.
C.C.P. 1881, § 831; R.S., R.C., & C.L., § 5156; C.S., § 7384; I.C.A., § 13-602; am. 2012, ch. 20, § 2, p. 66.

STATUTORY NOTES

Amendments.
The 2012 amendment, by ch. 20, substituted "the court shall immediately" for "or justice of the peace must immediately" near the beginning of the last sentence.

Carl Malamud
July 12, 2013
Page 8

7-610. Judgment — Penalty.

JUDICIAL DECISIONS

Inherent Power of Court.

When appellants' minor daughter was placed on probation for petit theft, the magistrate court violated appellants' Fourth Amendment rights by requiring appellants to submit to random urine testing for drugs. While the magistrate had the authority to impose a probation condition under subsection (1)(j) of § 20-520, a violation of the probation was punishable by criminal contempt under § 7-601 and the exclusionary rule applied. Requiring appellants to undergo urinalysis testing constituted a search that was presumptively invalid without a warrant. State v. Doe, 149 Idaho 353, 233 P.3d 1275 (2010).

CHAPTER 7

EMINENT DOMAIN

7-701. Uses for which authorized.

RESEARCH REFERENCES

A.L.R. — Validity of extraterritorial condemnation by municipality. 44 A.L.R.6th 259.

Zoning scheme, plan, or ordinance as temporary taking. 55 A.L.R.6th 635.

7-702. Estates subject to taking.

RESEARCH REFERENCES

A.L.R. — Validity of extraterritorial condemnation by municipality. 44 A.L.R.6th 259.

7-711. Assessment of damages.

RESEARCH REFERENCES

A.L.R. — Elements and measure of compensation in eminent domain proceeding for temporary taking of property. 49 A.L.R.6th 205.

Zoning scheme, plan, or ordinance as temporary taking. 55 A.L.R.6th 635.

7-717. Possession by plaintiff — Payment of damages — Appointment of commissioners.

JUDICIAL DECISIONS

Appeals.

Appellate court denied condemnee's motion to dismiss the state's appeal because the appeal was not moot even though the state tendered a check to the condemnee in satisfaction of the judgment before filing its appeal. If the appellate court determined that the jury rendered a verdict in excess of just compensation and ordered the condemnee to refund to the state funds in excess of that amount, the appeal would not be moot because the judicial determination would have a practical effect on the outcome, in that the state would recover some of its money. State Ex Rel. Winder v. Canyon Vista Family Ltd. P'ship, 148 Idaho 718, 228 P.3d 985 (2010).

Carl Malamud
July 12, 2013
Page 9

TITLE 8

PROVISIONAL REMEDIES IN CIVIL ACTIONS

CHAPTER.
5. Attachments and Garnishments, § 8-507C.
7. Deposit in Court, § 8-706.

CHAPTER 1

ARREST AND BAIL

8-106. Time of making and contents of order.

JUDICIAL DECISIONS

Authority of Sheriff.

County commissioners' supervisory authority to control other constitutional officers did not extend to the sheriff's bail procedures. The commissioners' statutory duties under §§ 20-622 and 31-1503 do not encompass control of bail, which is a matter within the sheriff's authority under this section and §§ 19-817 and 31-2202(6). Allied Bail Bonds, Inc. v. County of Kootenai, 151 Idaho 405, 258 P.3d 340 (2011).

CHAPTER 5

ATTACHMENTS AND GARNISHMENTS

SECTION.
8-507C. Forms.

8-507C. Forms. — The notice of exemptions, instructions to debtors and third parties, and the claim of exemption shall be in a form substantially similar to the form hereinafter provided. The forms shall be made available in English and Spanish language translations in the offices of each county sheriff. Notice, written in Spanish, of the availability of these documents in Spanish translation shall be set forth on the notice of exemptions.

IMPORTANT LEGAL NOTICE/NOTICIA LEGAL IMPORTANTE

MONEY/PERSONAL PROPERTY BELONGING TO YOU MAY HAVE BEEN TAKEN OR HELD IN ORDER TO SATISFY A COURT JUDGMENT. YOU MAY BE ABLE TO GET YOUR MONEY/PROPERTY BACK SO READ THIS NOTICE CAREFULLY.

SI SOLAMENTE HABLA ESPANOL PUEDE OBTENER UNA FORMA EN ESPANOL EN EL DEPARTAMENTO DEL SHERIFE.

The enclosed writ of execution and/or notice of garnishment has directed the sheriff to take custody by levying on your money and/or personal property in order to satisfy a court judgment.

The sheriff has levied on your money and/or personal property. You have

PUBLIC.RESOURCE.ORG ~ *A Nonprofit Corporation*

Public Works for a Better Government

July 15, 2013

Hon. Ben Ysura
Secretary of State
State of Idaho
PO Box 83720
Boise ID 83720-0080

Hon. Brent Hill
President Pro Tempore of the Senate
Idaho State Legislature
1010 South 2nd East
Rexburg, Idaho 83440

Hon. Scott Bedke
Speaker of the House
Idaho State Legislature
P.O. Box 89
Oakley, ID 83346

Idaho Code Commission
P.O. Box 388
Boise, ID 83701

Dear Secretary Ysura, President Pro Tempore Hill, Speaker Bedke, and Members of the Idaho Code Commission:

Public.Resource.Org is in receipt of the communication of July 12, 2013 from Mr. Bradlee R. Frazer of Hawley Troxell Ennis & Hawley LLP concerning your notice under 17 U.S.C. § 512(c)(3), the Digital Millennium Copyright Act. Your notice claims copyright infringement for the publication of the Idaho Code without having secured from you first a "royalty-free copyright license ... to reproduce and display the native, underlying statutory code content." In addition, your letter claims additional rights, for which you apparently will not grant any license, for all text which falls outside of the red boxes you drew on the Idaho Code, constituting what you describe as "analyses, summaries and reference materials."

We respectfully decline to remove the Idaho Code and respectfully reject the distinction between "native" code and additional materials, as both are integral part and parcel of the only official Idaho Code, such material constituting the official laws of Idaho as published by the state.

[illegible] 1005 GRAVENSTEIN HIGHWAY NORTH, SEBASTOPOL, CALIFORNIA 95472 • PH: (707) 823-7290 • FX: (707) 829-0104

It is a long-held tenet of American law that there is no copyright in the law. This is because the law belongs to the people and in our system of democracy we have the right to read, know, and speak the laws by which we choose to govern ourselves. Requiring a license before allowing citizens to speak the law would be a violation of deeply-held principles in our system that the laws apply equally to all.

This principle was strongly set out by the U.S. Supreme Court under Chief Justice John Marshall when they stated "the Court is unanimously of opinion that no reporter has or can have any copyright in the written opinions delivered by this Court, and that the judges thereof cannot confer on any reporter any such right." Wheaton v. Peters, 33 U.S. (8 Pet.) 591 (1834). The Supreme Court specifically extended that principle to state law, such as the Idaho Code, in Banks v. Manchester (128 U.S. 244, 1888) , where it stated that "the authentic exposition and interpretation of the law, which, binding every citizen, is free for publication to all, whether it is a declaration of unwritten law, or an interpretation of a constitution or a statute."

This principle has become embedded clearly throughout our country. The Court of Appeals for the Sixth Circuit has stated that "any person desiring to publish the statutes of a state may use any copy of such statutes to be found in any printed book, whether such book be the property of the state or the property of an individual." Howell v. Miller, 91 F. 129, 137 (6th Cir. 1898) (Harlan, J.).

These strong precedents are reflected in the official policy statement of the U.S. Copyright Office:

> "Edicts of government, such as judicial opinions, administrative rulings, legislative enactments, public ordinances, and similar official legal documents are not copyrightable for reasons of public policy. This applies to such works whether they are Federal, State, or local as well as to those of foreign governments."

U.S. Copyright Office, Compendium II: Copyright Office Practices § 206.01 (1984)

The principle that there is no copyright in the law, and that no license is therefore needed, has been fundamental to the evolution of our legal system. West Law could never have built that magnificent edifice of American jurisprudence, the Federal Reporter, if each court had required a license to publish. If citizens are required to obtain a license before repeating the law, does that not strike at the very heart of our rights of free speech under the First Amendment? If ignorance of the law is no excuse, how can we restrict promulgation of those laws?

The distinction between "native" content ("the law") and additional materials perhaps would have some bearing if the publication in question were the independent commercial endeavor of a publication firm. If such a firm were to copy the state statutes and compile that information with additional analyses and summaries and were to do so as a strictly commercial endeavor, we understand and respect that this material would be their private property.

However, the publication in question is not by some independent endeavor, it is by the Idaho Code Commission and the document is clearly labeled as the official Idaho Code. Your vendor states in its marketing materials that this document is "the only official

source" for Idaho law. The Idaho Code is a publication of the State and it is the definitive statement by the State of the law. Any lawyer would ignore this publication any of its components at his or her peril. Any citizen wishing to read the Official Idaho Code would have trouble distinguishing between the material you outlined in red and those materials outside the box. No matter how you slice that cheese, it all looks the same. The Official Idaho Code, every component of it, is the law.

A similar situation occurred in the great state of Oregon when we received a Cease and Desist notice on April 7, 2008 for publishing online the Oregon Revised Statutes. As with the present situation, lawyers for that state demanded licenses as a condition to publication and attempted to make a distinction between the law and the additional organization of that material by the Legislative Counsel of Oregon.

I am pleased to tell you that the State of Oregon decided that this was an issue that should be decided by the people of Oregon and their elected officials. The Speaker of the House and the Senate President called a hearing of the Legislative Counsel Committee, listened to citizens and to their own legislative counsel, kindly invited us to speak, and at the end of the day unanimously waived any assertion of copyright in the Oregon Revised Statutes.

Not only was copyright waived, something very special happened. With the restrictions on use of the Oregon Revised Statutes lifted, a law student at the Lewis & Clark Law School was able to take this material and develop a vastly better version of the Oregon Revised Statutes for the people of his state to use. Restricting use of the codes restricts innovation, making it harder to use the materials. Restrictions on the Idaho Code hurts democracy and the citizens of Idaho by making their laws less accessible.

In Oregon, the assertion of copyright dated back to the 1940s and the state had carried that policy forward. When the people of Oregon looked at the issue in the light of our modern era, the decision was very clear. Let us not forget that Section 73-210 of the Idaho Code, asserting copyright in the Idaho Code, was added in 1949 and this right was authorized and empowered in the Session Laws of 1947. Is it not time, in light of developments such as the Internet, to revisit those restrictions?

Our publication of the Idaho Code should be encouraged, not threatened. Our publication of the Idaho Code is the clean potato, not one that should be prosecuted by expensive law firms in federal courts. I would be more than happy to come to Idaho to discuss the matter with you, and would strongly encourage you to discuss the issue with the people of Idaho.

Sincerely yours,

Carl Malamud
Public.Resource.Org

CERTIFICATE

By Authority Of
THE UNITED STATES OF AMERICA
Legally Binding Document

By the Authority Vested By Part 5 of the United States Code § 552(a) and Part 1 of the Code of Regulations § 51 the attached document has been duly INCORPORATED BY REFERENCE and shall be considered legally binding upon all citizens and residents of the United States of America. *HEED THIS NOTICE*: Criminal penalties may apply for noncompliance.

Document Name: ASTM F2412-2005: Standard Test Methods for Foot Protection

CFR Section(s): 29 CFR 1910.136

Date of Action: 74 FR 40447, Aug. 11, 2009

APPROVED

Official Incorporator:
THE EXECUTIVE DIRECTOR
OFFICE OF THE FEDERAL REGISTER
WASHINGTON, D.C.

Designation: F 2412 – 05

Standard Test Methods for Foot Protection[1]

This standard is issued under the fixed designation F 2412; the number immediately following the designation indicates the year of original adoption or, in the case of revision, the year of last revision. A number in parentheses indicates the year of last reapproval. A superscript epsilon (ε) indicates an editorial change since the last revision or reapproval.

INTRODUCTION

For more than sixty years, the predecessor to these test methods, ANSI Z41, established the performance criteria for a wide range of footwear to protect from the hazards that affect the personal safety of workers. The value of these standards was recognized early in the history of the Occupational Safety and Health Administration (OSHA) and incorporated as a reference standard in the Code of Federal Regulation (CFR) Section 1910.

These test methods contains test protocols developed in conjunction with ANSI Z41 as well as other ASTM standards that are used to evaluate the performance of footwear when exposed to a variety of hazards: *(1)* impact resistance for the toe area of footwear; *(2)* compression resistance for the toe area of footwear; *(3)* metatarsal impact protection that reduces the chance of injury to the metatarsal bones at the top of the foot; *(4)* conductive properties that reduces hazards that may result from static electricity buildup and reduce the possibility of ignition of explosives and volatile chemicals; *(5)* electric shock resistant non-conductive; *(6)* static dissipative (SD) properties to reduce hazards due to excessively low footwear resistance that may exist where SD footwear is required; *(7)* puncture resistance of foot bottoms; *(8)* chain saw cut resistance hazards; and *(9)* dielectric hazard.

1. Scope

1.1 These test methods measure the resistance of footwear to a variety of hazards that can potentially result in injury.

1.2 These test methods may be used to test for compliance to minimum performance requirements in established safety standards.

1.2.1 By agreement between the purchaser and the supplier, or as required by established safety standards, these test methods can be used to determine any one, or all of the following: *(1)* impact resistance, *(2)* compression resistance, *(3)* metatarsal impact resistance, *(4)* resistance to electrical conductivity, *(5)* resistance to electric shock, *(6)* static dissipative performance, *(7)* puncture resistance of outsoles, *(8)* chain saw cut resistance, and *(9)* dielectric insulation.

1.3 The values stated in SI units are to be regarded as the standard. The values given in parentheses are for information only.

1.4 *This standard does not purport to address all of the safety concerns, if any, associated with its use. It is the responsibility of the user of this standard to establish appropriate safety and health practices and determine the applicability of regulatory limitations prior to use.*

2. Referenced Documents

2.1 *ASTM Standards:* [2]

B 117 Practice for Operating Salt Spray (Fog) Apparatus

F 1116 Test Method for Determining Dielectric Strength of Dielectric Footwear

F 1458 Test Method for Measurement of Cut Resistant to Chainsaw of Foot Protective Devices

2.2 *CSA Standard:* [3]

CAN/CSA Z195 Protective Footwear

3. Terminology

3.1 *Definitions:*

3.1.1 *footwear, n*—wearing apparel for the feet (such as shoes, boots, slippers, or overshoes), excluding hosiery.

3.1.1.1 *Discussion*—This term can refer to either left foot or right foot units or pairs.

[1] These test methods are under the jurisdiction of ASTM Committee F13 on Pedestrian/Walkway Safety and Footwear and are the direct responsibility of Subcommittee F13.30 on Footwear.

Current edition approved March 1, 2005. Published March 2005.

[2] For referenced ASTM standards, visit the ASTM website, www.astm.org, or contact ASTM Customer Service at service@astm.org. For *Annual Book of ASTM Standards* volume information, refer to the standard's Document Summary page on the ASTM website.

[3] Available from Canadian Standards Association (CSA), 178 Rexdale Blvd., Toronto, ON Canada M9W1R3.

Copyright © ASTM International, 100 Barr Harbor Drive, PO Box C700, West Conshohocken, PA 19428-2959, United States.

Copyright ASTM International
Provided by IHS under license with ASTM Int'l (all rights reserved);
No reproduction or networking permitted without license from IHS
Not for Resale, 04/13/2005 18:52:42 MDT
See www.PUBLICSOURCE.COM, WHERE
Single User, Unlimited Use per License Agreement with Kathe Hodges (IHS Account); Mon Apr 4 13:52:42 EDT 2005

3.1.2 *insert*, *n*—footbed normally made of a foam product with leather or fabric cover shaped to cover the entire insole which can be inserted between the foot and insole board.

3.1.3 *insole*, *n*—foundation of the shoe; the inner sole of the shoe which is next to the foot, under the sock liner or insert, onto which the upper is lasted.

3.1.4 *last*, *n*—solid hinged form, in the general shape of a foot, around which footwear is constructed.

3.1.5 *lasting*, *v*—building of footwear around a specific foot form.

3.1.6 *lining*, *n*—term used to describe all components that can be used to construct the interior of the upper portion of the footwear.

3.1.7 *outsole and heel*, *n*—exterior bottom platform of the footwear; the bottom surface.

3.1.8 *product category*, *n*—description for a type of footwear designed and manufactured for a specific hazard or hazards.

3.1.9 *product classification*, *n*—footwear manufactured to meet a minimum performance requirement for a specific hazard or hazards.

3.1.10 *protective footwear*, *n*—footwear that is designed, constructed, and classified to protect the wearer from a potential hazard or hazards.

3.1.11 *protective toe cap*, *n*—component designed to provide toe protection that is an integral and permanent part of the footwear.

3.1.12 *quarter*, *n*—entire back portion of the footwear upper.

3.1.13 *size*, *n*—length and breadth measurements of footwear determined by using a specific grading; the American system of footwear grading.

3.1.14 *sockliner*, *n*—material placed over the insole which is imprinted with a brand name or other designation.

3.1.15 *specimen, for protective footwear*, *n*—footwear units evaluated for various hazards.

3.1.15.1 *Discussion*—Footwear units may be a left foot, a right foot, or a matched pair. The exact number and type of footwear units is indicated by test method.

3.1.16 *upper*, *n*—parts of a shoe or boot that are above the sole.

4. Significance and Use

4.1 The purpose of these test methods is to provide measurable criteria for various hazards.

4.2 The protection that can be demonstrated by evaluation of footwear includes the following:

4.2.1 The effectiveness of impact resistant footwear to eliminate or diminish the severity of injury to the toe area of the foot when subjected to a falling object.

4.2.2 The effectiveness of compression resistant footwear to eliminate or diminish the severity of injury to the toe area of the foot when subjected to a compressive force.

4.2.3 The effectiveness of metatarsal protective footwear to eliminate or diminish the severity of injury to the metatarsal area adjacent to where the toes and the bones of the upper foot intersect.

4.2.4 The effectiveness of conductive footwear to safely reduce the buildup of static electricity from wearer to ground so as to reduce the possibility of ignition of explosives and volatile chemicals.

4.2.5 The effectiveness of electric shock resistant footwear to provide resistance to electric shock when accidental contact is made with live wires.

4.2.6 The effectiveness of static dissipative footwear to reduce the hazards due to excessively low footwear electrical resistance that may exist where SD footwear is required.

4.2.7 The effectiveness of puncture resistant footwear to reduce the possibility of puncture injury to the bottom of the human foot.

4.2.8 The effectiveness of chain saw cut resistant footwear to reduce the chance of injury when exposed to a running power chain saw.

4.2.9 The effectiveness of dielectric insulative footwear to reduce the possibility of injury when exposed to a high voltage charge.

5. Impact Resistance

5.1 *Summary of Method*:

5.1.1 Footwear with a protective toe cap is impacted with a specified force.

5.1.2 After impact, the height of the clay cylinder is measured.

5.2 *Apparatus*:

5.2.1 The apparatus as shown in Fig. 1 consists of a frame structure that permits the impactor to be constrained to fall along a known and repeatable path.

5.2.1.1 The impactor consists of a steel weight having a mass of 22.7 ± 0.23 kg (50 ± 0.5 lb). The nose of the impactor is a steel cylinder having a diameter of 25.4 ± 0.8 mm (1 ± 0.03 in.) and length of 50.8 mm (2.0 in.). The impact side of the cylinder has a smooth spherical surface with a radius of 25.4 ± 0.127 mm (1.00 ± 0.005 in.). The longitudinal centerline of the cylinder is parallel and coincident with 3.175 mm (0.125 in.) to the symmetry of its vertical axis.

5.2.1.2 Apparatus incorporates a means of measuring the velocity at impact with a tolerance of ±2 %. The use of a velocity metering system allows for determining the time required for a 25.4-mm (1-in.) wide blade to pass completely through a beam of light prior to the impactor striking the specimen. The result, referred to as gate time, is measured in ms. The speed in in./s can be calculated using the following formula:

$$V = \frac{1000}{t_g} \quad (1)$$

where:

V = velocity in in./s, and

t_g = gate time in ms.

5.2.2 The base of the apparatus consists of a steel plate with a minimum area 0.3 m^2 (1 ft^2) and minimum thickness of 25.4 mm (1 in.). The base is anchored to a structure having a minimum mass of 909.1 kg (2000 lb) to provide sufficient stability to the apparatus before, during, and after testing.

5.3 *Sampling*:

Copyright ASTM International
Provided by IHS under license with ASTM Int'l (all rights reserved);
No reproduction or networking permitted without license from IHS
Licensee=Kathe Hodges (KATHE HODGES Account); Mon Apr 4 13:52:42 EDT 2005

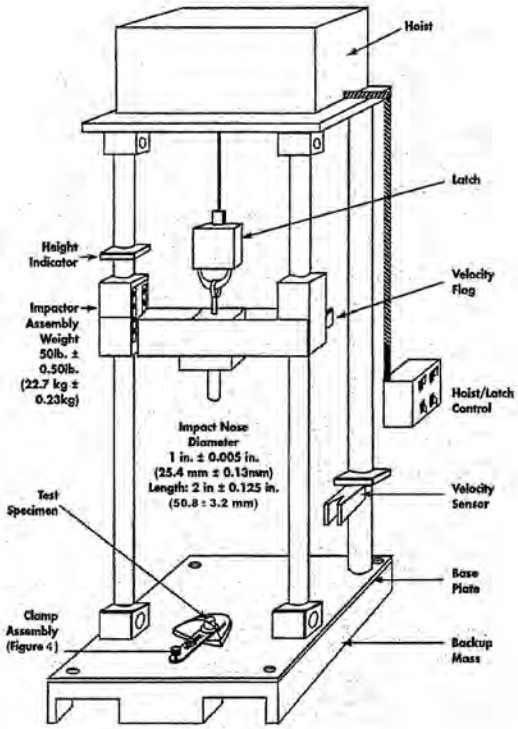

NOTE—Dimensions are in inches (millimetres).
FIG. 1 Footwear Impact Test Apparatus

5.3.1 Three half-pair test specimens shall include both left and right footwear, of each product category are prepared from new manufactured footwear randomly selected from stock inventory.

5.3.1.1 Men's footwear specimens are prepared from size 9D, medium width.

5.3.1.2 Women's footwear specimens are prepared from size 8B, medium width.

5.3.2 The specimens shall be obtained by completely removing the toe portion of the footwear. This is done by cutting across the width of the footwear 25.4 ± 3.2 mm (1 ± 0.125 in.) behind the back edge of the protective toe cap as shown in Fig. 2.

5.4 *Specimen Mounting*:

5.4.1 Specimens are to be placed on the test apparatus base plate so that the sole is parallel with the base.

Copyright ASTM International;
Provided by IHS under license with ASTM Int'l (all rights reserved);
No reproduction or networking permitted without license from IHS
Single User Licence, Not for distribution
Sold to:PUBLIC,RESOURCE.ORG, WASHINGTON
,,,

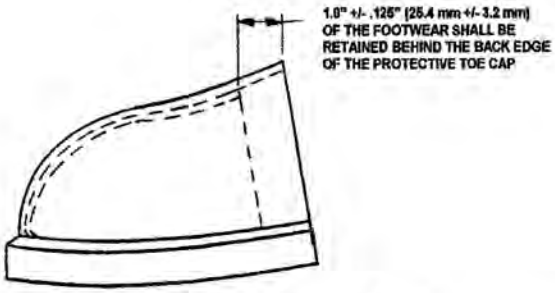

FIG. 2 Specimen Prepared for Compression Testing

5.4.1.1 The specimen is positioned so that the longitudinal center of the nose of the impactor strikes the approximate center of the protective toe cap at a point that is 12.7 ± 1.6 mm (0.50 ± 0.0625 in.) toward the front as measured from the back edge of the protective toe cap (see Fig. 3).

5.4.2 The specimen is held in position during test by use of a clamping device as shown in Fig. 4.

5.4.2.1 The stabilizing fork clamp device rests on the insert and can be adjusted by means of a screw.

5.4.2.2 The adjustment secures the specimen parallel to the base plate and prevents movement when the impactor strikes the specimen.

5.4.2.3 Clamping screw shall be tightened using a force less than 28 Nm (25 in. lbs).

5.5 *Procedure*:

5.5.1 Prior to impact testing, a lump of modeling clay formed as a vertical cylinder is positioned inside the specimens directly under the point of impact (see Fig. 3).

5.5.1.1 The clay shall be shaped so that the cylinder simultaneously makes contact with the insole/sock of the footwear and the dome of the protective toe cap.

NOTE 1—A small piece of wax paper or cellophane can be placed on either the bottom side or top side of the cylinder to prevent the clay from adhering to either the insert/sock liner or dome.

5.5.1.2 The diameter of the cylinder shall not exceed 25.4 mm (1 in.).

5.5.2 After impact, carefully remove the clay cylinder from inside the specimen and measure the height of the cylinder at its lowest point using a measuring device capable of measuring to the nearest 0.1 mm (0.004 in.).

5.5.2.1 This value is reported as the impact minimum interior height clearance for the specimen.

5.5.3 To measure Class 75 product classification footwear, the impactor is dropped from a height that results in an impact velocity of 2995 ± 61 mm/s (117.9 ± 2.4 in./s), creating a force of 101.75 J (75 ft-lbf).

NOTE 2—In a vacuum, the distance would be 457 mm (18 in.). Due to friction and air resistance, the height used for the test is somewhat greater.

5.5.4 To measure Class 50 Product Classification footwear, the impactor is dropped from a height that results in an impact velocity of 2438 ± 48.3 mm/s (96 ± 1.9 in./s), creating a force of 67.8 J (50 ft-lbf).

NOTE 3—In a vacuum, the distance would be 305 mm (12 in.). Due to

FIG. 3 Specimen Prepared for Impact Testing

Copyright ASTM International
Provided by IHS under license with ASTM Int'l by ASTM Int'l (all rights reserved);
No reproduction or networking permitted without license from IHS
Single User, Non-Networkable
Sold to:PUBLIC RESOURCE.ORG, WASHINGTON
2013/5/8 13:57:3 GMT(IS Account); Mon Apr 4 13:52:42 EDT 2005
per License Agreement with Kathe Hodges (

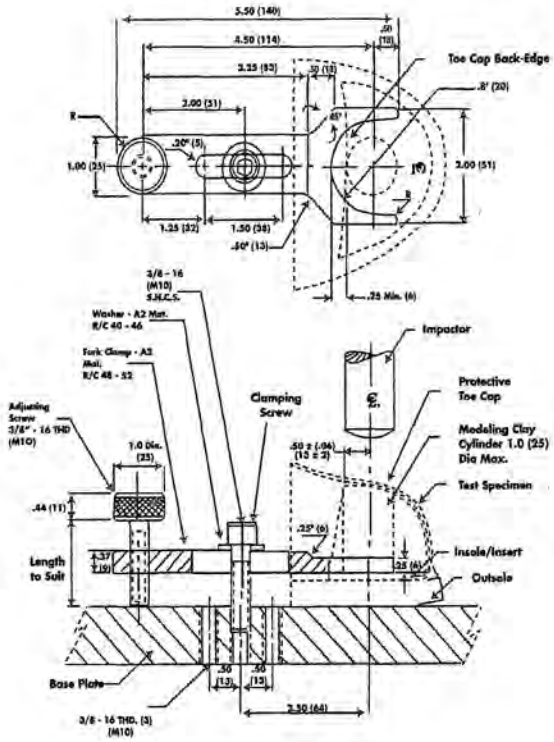

NOTE—Dimensions are in inches (millimeters).

FIG. 4 Position/Clamping/Impact Arrangement

friction and air resistance, the height used for the test is somewhat greater.

5.6 *Test Report*—Report the minimum height of the clay cylinder, without rounding up, to the nearest 0.1 mm (0.004 in.) as the clearance result for the product category for all three specimens.

6. Compression Resistance

6.1 *Summary of Method:*

6.1.1 Footwear with a protective toe cap is exposed to a compressive force.

6.1.2 During application of the compressive force, the interior space of the toe cap is measured using a clay cylinder.

6.2 *Apparatus:*

6.2.1 Compression testing equipment that is equipped with smooth steel compression test surfaces.

Copyright ASTM International
Provided by IHS under license with ASTM Int'l (all rights reserved);
No reproduction or networking permitted without license from IHS
per License Agreement with Kathe Ho
Account); Mon Apr 4 13:52:42 EDT 2005

6.2.1.1 Test surfaces must remain parallel during application of force up to 44 482 N (10 000 lbf).

6.2.1.2 Pressure head has a minimum diameter of 76.2 mm (3 in.) and a bed plate with a minimum width of 152.4 mm (6 in.).

6.2.1.3 Equipment must be graduated in increments so as to measure compressive force between 222.4 N (50 lbf) to 44 482 N (10 000 lbf).

6.3 *Sampling*:

6.3.1 *A total of three half pair specimens*, which shall include both left and right footwear of each product category, are prepared from new manufactured footwear randomly selected from stock inventory.

6.3.1.1 Men's footwear specimens are prepared from size 9D, medium width.

6.3.1.2 Women's footwear specimens are prepared from size 8B, medium width.

6.3.2 The specimens shall be prepared by completely removing the toe portion of the footwear. This is done by cutting across the width of the footwear 25.4 ± 3.2 mm (1 ± 0.125 in.) behind the back edge of the protective toe cap as shown in Fig. 2.

6.4 *Specimen Mounting*:

6.4.1 The specimen is positioned on the bed plate of the test apparatus so that the highest point of the protective toe cap is perpendicular to the direction of force.

6.4.2 The stabilizing fork clamp device rests on the insert and can be adjusted by means of a screw (see Fig. 4).

6.4.2.1 This adjustment secures the specimen parallel to the bed plate and prevents movement.

6.4.2.2 Clamping screw shall be tightened using a force less than 28 Nm (25 in. lbs).

6.5 *Procedure*:

6.5.1 Prior to compression testing, a lump or modeling clay as a vertical cylinder is positioned inside the specimen directly under the center of the protective cap (see Fig. 3).

6.5.2 The clay shall be shaped so that the cylinder simultaneously makes contact with the insert/sock liner of the footwear and the dome of the protective cap (see Note 1).

6.5.3 The diameter of the cylinder shall not exceed 25.4 mm (1 in.).

6.5.4 A compressive force is applied to the specimen at an approximate rate of 222.4 N/s (50 lbf/s).

6.5.5 After compression testing, carefully remove the clay cylinder from the specimen and, using a measuring device capable of measuring to the nearest 0.1 mm (0.004 in.) measure the height of the cylinder at its lowest point, without rounding up.

6.6 *Test Report*—Report the minimum interior height clearance for the specimen to the nearest 0.1 mm (0.004 in.), without rounding up for each of three specimens as the compression resistance and classification for the product category.

7. Metatarsal Impact Resistance

7.1 *Summary of Method*:

7.1.1 Footwear with a protective toe cap and metatarsal guard is impacted with the appropriate force.

7.1.2 After impact, the height of the wax form is measured.

7.2 *Apparatus*:

7.2.1 The same apparatus as used in 5.2 (Fig. 1) for impact testing of protective footwear, with certain modifications, is used for metatarsal impact testing. The modifications to the apparatus are shown in Fig. 5 and Fig. 6.

7.2.1.1 The striking surface that impacts the metatarsal protection is a horizontal bar that is perpendicular to the vertical traverse of the test apparatus. The bar of polished steel has a diameter of 25.4 ± 0.5 mm (1 ± 0.02 in.) and a length of 152.4 ± 3.2 mm (6 ± 0.125 in.).

7.2.1.2 The striking bar is positioned so that the impact is perpendicular to the longitudinal plane of the heel/toe axis at the appropriate impact point for men's and women's footwear (see Fig. 7).

7.3 *Sampling*:

7.3.1 A total of three half-pair test specimens (shall include both left and right footwear) of each product category are prepared from new manufactured footwear randomly selected from stock inventory.

7.3.1.1 Men's footwear specimens are prepared from size 9D, medium width.

7.3.1.2 Women's footwear specimens are prepared from size 8B, medium width.

7.4 *Specimen Mounting*:

7.4.1 Mount specimen in a device, as shown in Fig. 6, that retains footwear in place during testing.

7.4.2 Mount specimen so that outsole is resting on base of apparatus and positioned so that the point of contact for the striking bar is appropriate for the specimen as shown in Fig. 7.

7.4.2.1 Men's footwear requires that the point of contact for the striking bar is 89 mm (3.5 in.) when measured backwards from the front point of the toe toward the heel.

7.4.2.2 Women's footwear requires that the point of contact for the striking bar is 86 mm (3.375 in.) when measured backwards from the front part of the toe toward the heel.

7.5 *Procedure*:

7.5.1 Insert a wax form, as described in Annex A1, into the specimen. The insert/sock lining of the footwear shall remain in the footwear during testing.

7.5.1.1 The wax form shall completely fill the protective footwear cavity and extend toward the quarter of the footwear approximately 76.2 mm (3 in.) beyond the back edge of the protective toe cap.

7.5.1.2 The use of a heel block is used to secure the wax form in place and also to fill the cavity between the back edge of the wax form and the quarter.

7.5.2 Position the impactor on test apparatus to the proper height for product classification of footwear (see 5.5.3 and 5.5.4).

7.5.2.1 Release the impactor.

7.5.3 Reposition the impactor on test apparatus, and carefully remove the wax form from the specimen.

7.5.4 *Test Report*—Measure the distance from the lowest point of the impression made in the wax form to the bottom surface of the form as shown in Fig. 7 and report the results to the nearest 0.1 mm (0.004 in.) for all three test specimens without rounding up.

Copyright ASTM International
Provided by IHS under license with ASTM by ASTM Int'l (all rights reserved);
No reproduction or networking permitted without license from IHS
Single User, Unauthorized Use Prohibited
SEE HTTPS://IHSDOCS.IHSCORP.COM/ASTM/
IHS Order # 1MDT2 (ASTM IS Account); Mon Apr 4 13:52:42 EDT 2005
per License Agreement with Kathe Hospital

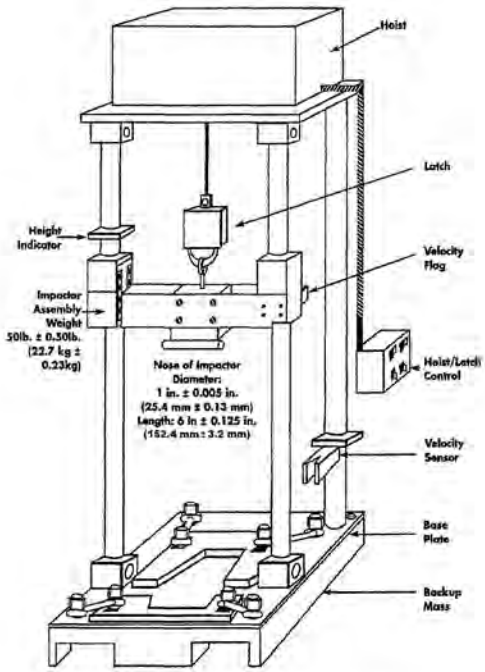

NOTE—Dimensions are in inches (millimetres).

FIG. 5 Metatarsal Footwear Impact Test Apparatus

8. Conductive Protective Footwear

8.1 *Summary of Method:*

8.1.1 The footwear is placed on a base electrode plate and the second electrode is embedded in a layer of metal spheres which fill the inside of the footwear.

8.1.2 Electrical resistance is measured after applying the specified voltage for a prescribed time.

8.2 *Apparatus:*

8.2.1 The apparatus as shown in Fig. 8 requires that it be as follows:

8.2.1.1 500 V regulated dc power supply with a current rating of 5 mA or greater.

8.2.1.2 100 000 σ resistor with accuracy ±10 % rated at 2.5 W and 500 V or greater.

8.2.1.3 0 to 5 mA ammeter with accuracy of ±5 % in one or more ranges.

8.2.1.4 Voltmeter of 0 to 500 V with minimum accuracy of ±5 % in one or more ranges with a nominal internal resistance of 10 Megohm or greater.

8.2.1.5 A stainless steel base electrode plate 228.6 by 330.2 mm (9 by 13 in.) that can accommodate the complete outsole and heel of the footwear. The second electrode consists of 3 mm (0.117 in.) solid metal spheres, such as BB shot, which is placed inside the footwear to be tested so that the entire interior

Copyright ASTM International
Provided by IHS under license with ASTM Int'l (all rights reserved);
No reproduction or networking permitted without license from IHS
Licensee=PUBLIC RESOURCE.ORG, WASHINGTON
Not for Resale, 10/27/2005 18:57:39 MST
Single User Access, Subscription, Account: 1000
Order No.: 2005-SN0173
Reproduced by permission of ASTM International under license agreement between Kathe Hoffman and IHS, Inc.
Not for Resale, No reproduction or networking permitted without license from IHS
Licensee=Kathe Hoffman/5966101001, User=Hoffman, Kathe
Order No.: 2005-SN0173 Account: 1000
Mon Apr 4 13:52:42 EDT 2005

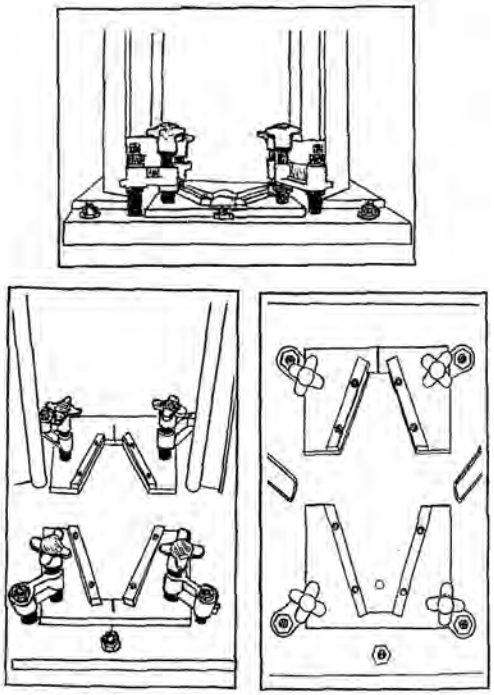

FIG. 6 Metatarsal Footwear Retaining Device

surface of the footwear is covered and reaches a depth of not less than 30 mm (1.18 in.).

8.2.2 The electrical circuit connects power supply in series with the resistor, ammeter, electrodes, and test specimen. The volt meter is connected to the two electrodes to measure the voltage across the specimen.

8.2.2.1 Resistance is calculated using ohms law:

$$R = V/I \quad (2)$$

where:

R = resistance calculated in ohms,
V = voltage across the test sample in V, and
I = the current through the test sample in A.

8.3 *Sampling*:

8.3.1 Based on lot size, the minimum number of specimens are selected from new manufactured footwear randomly selected from stock inventory.

Copyright ASTM International
Provided by IHS under license with ASTM Int'l (all rights reserved);
No reproduction or networking permitted without license from IHS
Single User Licensed per License Agreement with Kathie Hodge (KATHIE HODGE/IS Account); Mon Apr 4 13:52:42 EDT 2005

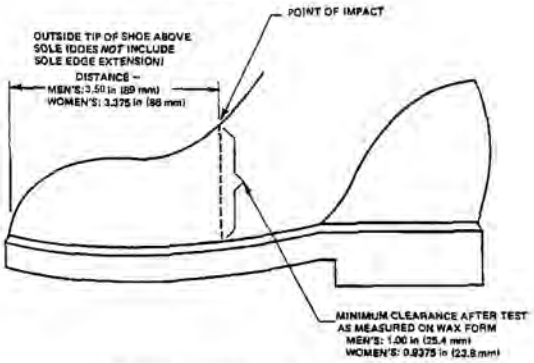

FIG. 7 Point of Impact and After-Test Minimum Clearance

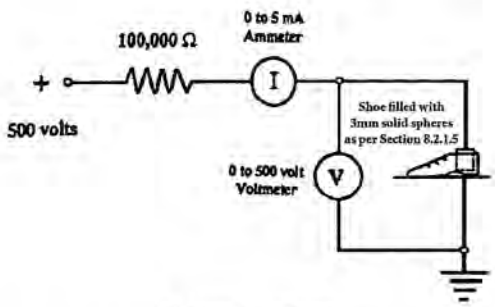

FIG. 8 Example of a Test Circuit

8.3.1.1 Men's footwear specimens are selected from size 9D, medium width.

8.3.1.2 Women's footwear specimens are selected from size 8B, medium width.

8.3.2 Lot size determination for specimens as follows:

Lot Size	Footwear to Pair Units
up to 600 pairs	2 each
601 to 22 000 pairs	3 each
22 001 pairs and over	5 each

8.4 *Specimen Mounting*—Place the specimen that has been filled with metal spheres on the outer electrode plate of the apparatus so that outsole and heel are completely in contact with the steel plate base electrode.

8.5 *Procedure:*

8.5.1 Place specimen on steel plate base electrode.

8.5.2 Insert the second electrode so that it is positioned in the metal spheres.

Copyright ASTM International
Provided by IHS under license with ASTM Int'l (all rights reserved);
No reproduction or networking permitted without license from IHS
Single User, Downloaded and printed per License Agreement with Kathe Hoppe (KATHE HOPPE/JS Account); Mon Apr 4 13:52:42 EDT 2005

8.5.3 Apply the voltage and take the resistance measurements within a maximum time of 30 s.

8.6 *Test Report*—Report the electrical resistance.

9. Electric Shock Resistant Footwear

9.1 *Summary of Method*:

9.1.1 The footwear is placed on an outer metal mesh platform electrode; a second electrode is embedded in a layer of small metal spheres packing the inside of the footwear.

9.1.2 Voltage is applied to the footwear on the outer platform for a specified time.

9.1.3 AC resistance is determined by measuring current flow through the footwear.

9.2 *Apparatus*:

Warning—Extreme care must be used when operating this test apparatus. Human contact with any part of the circuit could be lethal. Only qualified operators trained in high voltage testing should use this apparatus. The equipment should preferably be operated enclosed in a cabinet with interlock protections on the door.

9.2.1 The apparatus shown in Fig. 9 is used to perform the test.

9.2.2 A 0.5 kVA (500 VA) transformer having a measurement system with an impedance value that does not exceed 280 000 ohms.

9.2.2.1 The outer electrode platform consists of a fine screen metal mesh that is spring mounted onto a frame using moderate tension. Mesh must be sufficient to support the weight of the footwear with the interior electrode.

9.2.2.2 The inner electrode consists of solid metal spheres (for example, BB shot) having a diameter of 3 mm (0.117 in.) placed inside the footwear to a depth of not less than 30 mm (1.18 in.).

9.2.3 A voltmeter used in conjunction with a calibrated instrument potential transformer.

9.2.4 AC ammeter, or an equivalent non-inductive shunt and volt meter.

9.3 *Sampling*:

9.3.1 Based on lot size, the minimum number of samples are selected from new manufactured footwear randomly selected from stock inventory.

9.3.1.1 Men's footwear specimens are selected from size 9D, medium width.

9.3.1.2 Women's footwear specimens are selected from size 8B, medium width.

9.3.2 Lot size determination for specimens as follows:

Lot Size	Footwear Units ½ Pair Units
up to 800 pairs	2 each
801 to 22 000 pairs	3 each
22 000 and over	5 each

9.4 *Specimen Mounting*—Place footwear that has been filled with stainless steel balls onto outer electrode mesh platform, then insert the inner electrode into the stainless steel balls.

9.5 *Procedure*:

9.5.1 Maintain inner electrode at ground potential.

9.5.2 Apply the test voltage to the outer electrode at a low level (near 0 V).

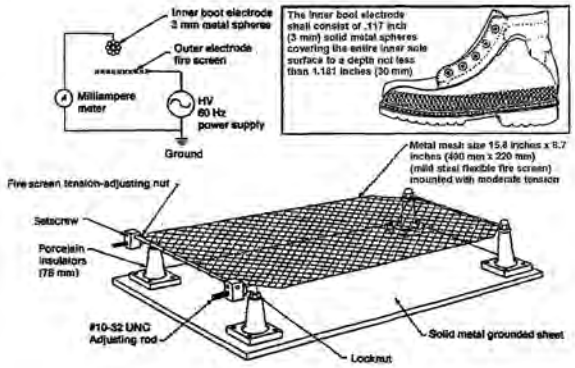

NOTE—**Warning**—Should be handled with extreme care.

FIG. 9 Typical Footwear Electrical Test Platform

Copyright ASTM International
Provided by IHS under license with ASTM Int'l (all rights reserved);
No reproduction or networking permitted without license from IHS
per License Agreement with Kathe Hoffman (IS Account); Mon Apr 4 13:52:42 EDT 2005

9.5.2.1 Raise voltage at a rate of 1 kV/s to 14 kV (root mean square (rms) value) at 60 Hz and maintain this voltage for 1 min.

9.5.2.2 Measure voltage using a voltmeter in conjunction with a calibrated instrument potential transformer connected directly across the high voltage circuit.

9.5.2.3 Measure the current with an AC ammeter or an equivalent non-inductive shunt and a voltmeter, connected in series with the specimen.

9.6 *Test Report*—Report the leakage current.

10. Static Dissipative Footwear

10.1 *Summary of Method*:

10.1.1 Static dissipative footwear is fitted onto the feet of a human test subject.

10.1.2 Resistance is measured by applying a specific voltage after a prescribed period of time.

10.2 *Apparatus*:

10.2.1 The apparatus, as shown in Fig. 10, requires having the following:

10.2.1.1 A DC power supply at a fixed 50 V output that has current limited to 5 mA for shock protection of human test subjects.

10.2.1.2 Reference resistor greater than 1 megohms. Voltmeter with a nominal internal resistance of 10 megohms or greater and which measures to three or more significant digits.

10.2.1.3 A stainless steel ground plate of sufficient size to accommodate the outsole and heel of a specimen pair of footwear.

10.2.2 The electrical circuit connects the power supply in series with the resistor, electrodes, human test subject, and test specimen. The voltmeter is connected across the reference resistor to measure the voltage drop. The voltage applied across the human test subject and specimen footwear is less than 50 V.

10.2.2.1 Resistance is calculated using the following equation:

$$R = \frac{50\ \mathrm{V} - V}{V} \cdot Rp \qquad (3)$$

where:

R = resistance in ohms,
V = voltage drop across the reference resistor Re, and
Rp = the combined parallel resistance of resistor Re and the internal resistance of voltmeter RV:

$$Rp = (Re \cdot Rv) / (Re + Rv)$$

10.3 *Sampling*:

10.3.1 Based on lot size, the minimum number of specimens are selected from new manufactured footwear randomly selected from stock inventory.

10.3.1.1 Men's footwear specimens are selected from size 9D, medium width.

10.3.1.2 Women's footwear specimens are selected from size 8B, medium width.

10.3.2 Lot size determination for specimens as follows:

Lot Size	Footwear Units
up to 800 pairs	2 each
801 to 22 000 pairs	3 each
22 001 pairs and over	5 each

10.4 *Specimen Mounting*:

10.4.1 Human test subject mounts stainless steel ground plate in stocking feet.

10.4.1.1 Specimen is then fitted onto human test subject.

10.5 *Test Procedure*:

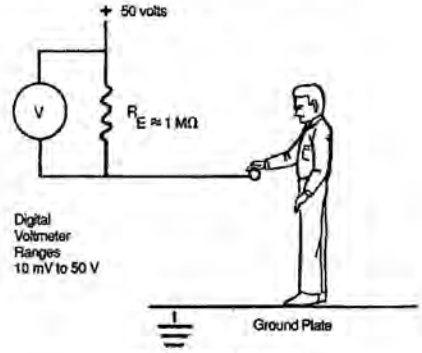

FIG. 10 Example of Test Circuit

Copyright ASTM International
Provided by IHS under license with ASTM International (all rights reserved);
No reproduction or networking permitted without license from IHS
Sold to:PUBLIC RESOURCE.ORG, WASHINGTON
2010-05-19 09:52 GMT+0
Licensee=IHS Account); Mon Apr 4 13:52:42 EDT 2005

10.5.1 Human test subject in stocking feet makes hand contact to a conducting rod or clip that produces good body contact.

10.5.1.1 This contact shows a resistance path to ground of 100 000 ohms or less.

10.5.2 Test subject is fitted with specimens and wears them for 5 min before standing on stainless steel ground plate.

10.5.2.1 Measure resistance of each specimen, left shoe, right shoe, and then measure resistance of both feet simultaneously.

10.6 *Test Report*—Report the electrical resistance for the right foot, left foot, and the pair of shoes tested.

11. Puncture Resistant Footwear

11.1 *Summary of Method*:

11.1.1 A puncture resistant device, a separate component outside of footwear, is mounted on a movable block.

11.1.2 A pointed steel pin having a specific geometry is positioned on a stationary platform.

11.1.3 The puncture resistant device is visually examined to determine if puncture has occurred.

11.2 *Apparatus*:

11.2.1 A test apparatus having a movable platform that permits travel of the specimen either laterally or longitudinally is used to secure the specimen for testing.

11.2.1.1 The mounting device shall have a means to secure the specimen to prevent movement either horizontally or vertically.

11.2.2 The apparatus having a height of 19.05 mm (0.75 in.) is configured with an opening in the block having a diameter of 12.7 mm (0.50 in.). See Fig. 11.

11.2.2.1 The apparatus is configured with a pointed steel pin having a length of 50.8 mm (2.0 in.) and a diameter of 4.5 ± 1 mm (0.18 ± 0.04 in.), a conical truncated tip having a diameter of 1.0 ± 0.05 mm (0.04 ± 0.002 in.) and an angle of 30 ± 2° min at the tip. The steel pin shall have a Rockwell hardness C52 + 4. See Fig. 12.

NOTE 4—Unless required to be done earlier, steel pin to be replaced after performing 200 tests.

11.3 *Sampling*:

11.3.1 Select three pairs of random sizes (six units) of puncture resistant devices for testing for each of the three tests.

11.4 *Specimen Mounting*:

11.4.1 Mount specimen onto apparatus having a movable platform and secure specimen to prevent movement in any direction.

11.4.2 Confirm that alignment of block will permit probe to penetrate the opening without any interference.

11.4.3 Confirm that puncture resistant device can be repositioned within the apparatus to permit multiple puncture tests anywhere on surface of device. Positions of puncture impact include any location that is at least 25.4 mm (1 in.) from outside edge of device.

11.5 *Test Procedure*:

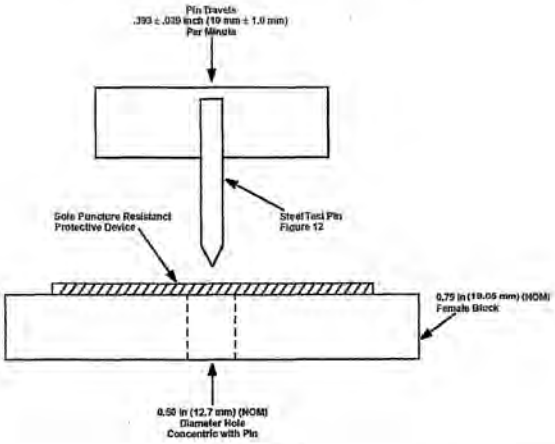

FIG. 11 Test Apparatus

Copyright ASTM International
Provided by IHS under license with ASTM Int'l (all rights reserved);
No reproduction or networking permitted without license from IHS
Not for Resale, 12/21/2015 19:07:23 GMT-05:00
No part of this document may be reproduced or stored in a retrieval system, or transmitted in any form or by any means, electronic, mechanical, photocopying, recording, or otherwise, without prior written permission of IHS
--`,,,

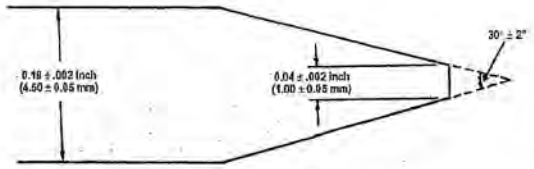

NOTE—Steel test pin 0.18 ± .002 in. (4.50 ± 0.05 mm) diameter with truncated tip 0.04 ± .002 in. (1.00 ± 0.05 mm) in diameter and with an angle of 30° ± 2° at the tip.

FIG. 12 Steel Test Pin

11.5.1 Perform three puncture tests on each puncture resistant device by placing the steel pin in contact with the puncture resistant device and exerting a steady force. The rate of traverse of the steel pin is 10 mm (0.393 in.) per minute.

11.5.1.1 After each test, reposition the device a minimum of 25.4 mm (1 in.) from previous test and a minimum of 25.4 mm (1 in.) from outer edge of device.

11.6 *Test Report*—Report the minimum force required for puncture to occur.

11.7 *Flex Resistance*:

11.7.1 Measure flex resistance of puncture resistant devices using CAN/CSA Z195.

11.7.1.1 Flex resistance device is shown in Fig. 13.

12. Corrosion Resistance

12.1 Measure the corrosive resistance of the puncture resistant device in accordance with Practice B 117 using a 5 % salt solution for 24 h.

13. Chain Saw Cut Resistant Footwear

13.1 Measure chain saw cut resistant footwear using Test Method F 1458.

14. Dielectric Insulation

14.1 Measure dielectric insulation using Test Method F 1116.

15. Precision and Bias

15.1 In case of a dispute arising from differences in reported test results, when using these test methods for acceptance testing of commercial shipments, the purchaser and the supplier should perform comparative tests to determine if there is a statistical bias between their laboratories. Competent statistical assistance is recommended for the investigation of bias. As a minimum, the two parties should take a group of test specimens from the same lot of product to be evaluated. These test specimens should then be randomly assigned in equal numbers to each laboratory for testing. If a bias is found, either its cause must be determined and corrected, or the purchaser and the supplier must agree to interpret future test results in light of the known bias.

16. Keywords

16.1 chain saw protection; conductive footwear; dielectric; electric shock resistance (EH); foot protection; impact resistance; metatarsal protection; protective footwear; puncture resistance; safety footwear electrical hazard; static dissipative (ESD)

Copyright ASTM International
Provided by IHS under license with ASTM International; Sold to:
No reproduction or networking permitted without license from IHS
Reproduced, distributed per License Agreement with Kathe Hou[illegible] (ASTM Account); Mon Apr 4 13:52:42 EDT 2005

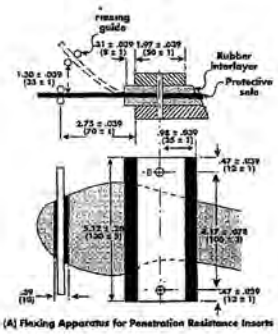

(A) Flexing Apparatus for Penetration Resistance Inserts

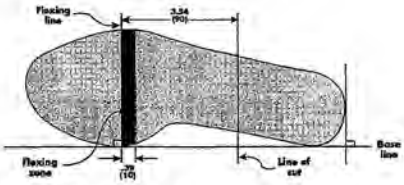

(B) Flexing Line for Inserts

NOTE—Dimensions are in inches (millimetres).

FIG. 13 Sole Puncture Resistance Protective Device Flexing Test

ANNEX

(Mandatory Information)

A1. PREPARATION OF WAX FORMS—METATARSAL IMPACT TESTING

A1.1 Apparatus

A1.1.1 The following equipment is needed to build wax forms to be used for metatarsal impact testing:

A1.1.1.1 Hot air circulating oven capable of maintaining temperatures up to 100°C (212°F),

A1.1.1.2 Scale,

A1.1.1.3 Mixer having a variable speed motor and a single agitator wire cage stirrer,

A1.1.1.4 Kettles for mixing liquid wax,

A1.1.1.5 Molds,

A1.1.1.6 Refrigerator,

A1.1.1.7 Reinforced nylon strapping tape (used to remove wax from footwear after testing), and

A1.1.1.8 Thermometer,

Copyright ASTM International
Provided by IHS under license with ASTM by ASTM Int'l (all rights reserved);
No reproduction or networking permitted without license from IHS
Not for resale, duplication, or distribution
Reproduced and distributed per License Agreement with Kathie Hou[illegible] IS Account): Mon Apr 4 13:52:42 EDT 2005

A1.2 Ingredients

A1.2.1 A ratio of five parts paraffin wax and one part beeswax are needed to produce six wax forms:

Paraffin wax	2.25 kg (5 lb)
Beeswax	0.45 kg (1 lb)

A1.3 Procedure

A1.3.1 Combine the paraffin wax and the beeswax into a mixing kettle.

A1.3.2 Place kettle into hot air circulatory oven and heat to a temperature of 85°C (185°F) so that both ingredients are a liquid.

A1.3.3 Remove kettle from oven, insert thermometer in kettle, and stir at a low speed as the wax cools to a temperature of 60°C (140°F) and wax crystals start to form.

A1.3.3.1 Continue to stir while increasing agitation speed to medium rate of speed (approximately 440 rpm) until a light foam begins to form in wax.

A1.3.4 Pour into six separate molds.

A1.3.4.1 Place a 226.8 mm (9 in.) length of reinforced strapping tape on the top (flat surface) of the mold. Gently press this onto the form.

NOTE A1.1—Tape functions as a handle when removing wax form from test specimen.

A1.3.5 Place molds in refrigerator until solid.

A1.3.5.1 Remove wax forms and store in room having a temperature between 18 to 29°C (65 to 85°F). Wax forms must be stored in this atmosphere for a minimum of 12 h prior to testing.

ASTM International takes no position respecting the validity of any patent rights asserted in connection with any item mentioned in this standard. Users of this standard are expressly advised that determination of the validity of any such patent rights, and the risk of infringement of such rights, are entirely their own responsibility.

This standard is subject to revision at any time by the responsible technical committee and must be reviewed every five years and if not revised, either reapproved or withdrawn. Your comments are invited either for revision of this standard or for additional standards and should be addressed to ASTM International Headquarters. Your comments will receive careful consideration at a meeting of the responsible technical committee, which you may attend. If you feel that your comments have not received a fair hearing you should make your views known to the ASTM Committee on Standards, at the address shown below.

This standard is copyrighted by ASTM International, 100 Barr Harbor Drive, PO Box C700, West Conshohocken, PA 19428-2959, United States. Individual reprints (single or multiple copies) of this standard may be obtained by contacting ASTM at the above address or at 610-832-9585 (phone), 610-832-9555 (fax), or service@astm.org (e-mail); or through the ASTM website (www.astm.org).

Copyright ASTM International
Provided by IHS under license with ASTM Int'l (all rights reserved);
No reproduction or networking permitted without license from IHS
Sold to:PUBLIC RESOURCE.ORG, WASHINGTON
2016/15 1979 RMTIS Account); Mon Apr 4 13:52:42 EDT 2005
per License Agreement with Kathe Hodges, (Not for Resale)

Responses to Follow-Up Questions for the Record on
Testimony of Sean M. O'Connor, Professor of Law and Assistant Dean for Law, Business & Technology Initiatives, University of Washington (Seattle)

Before the Committee on the Judiciary
Subcommittee on Courts, Intellectual Property, and the Internet

Notice and Takedown Provisions under the DMCA, § 512

Date of Hearing: March 13, 2014
Date of Responses: August 22, 2014

Chairman Goodlatte, Chairman Coble, Ranking Member Nadler, Members of the Subcommittee, thank you for the opportunity to respond for the record to questions sent to me from Representatives Collins and Jeffries after the March 14 hearing. I appreciate the thoughtfulness of these questions and the chance to expand on my thoughts regarding this important topic.

To update my biography from the time of the hearing, I have recently been appointed as Assistant Dean for Law, Business, and Technology Initiatives at the University of Washington School of Law, while still maintaining my appointed as tenured Professor of Law. In this new capacity, I oversee all of our intellectual property, technology, business, and entrepreneurship law programs and centers. I also serve as Chair of the university-wide Intellectual Property Management Advisory Committee, that reports directly to the President of UW. I continue to submit testimony on my own behalf, however, and my statements here are my own and do not necessarily represent the views of any of the organizations I am or have been affiliated with.

I provide responses to the two questions I received from Subcommittee members below.

Question 1 (Representative Doug Collins)

"In providing that Congress has the power (and I believe responsibility) of "securing" the exclusive Rights of Authors and Inventors, the Constitution doesn't make any distinction between small copyright owners like Ms. Schneider and large copyright owners. But there can be little argument that the latter have greater resources to protect their investments in creating new works and greater leverage in negotiating with large intermediaries (like Google) who make available and generate substantial profits from content that is infringing.

If this Committee concludes that small copyright owners are disproportionately harmed by infringements of their works, would you agree we should take steps to ensure that their exclusive rights are "secured" as the Founders intended? If yes, what steps do you think we should take? If no, why do you feel that Section 512 should only provide a

remedy for those with enormous resources to monitor the use of their works online all over the globe?"

Response

This question quite rightly focuses on an important equity interest to make sure that *all* copyright owners be able to effectively enforce their rights, regardless of financial circumstances or negotiating leverage. I will respond by first making some observations on the importance of "securing" rights, and then directly answering the questions posed.

The Intellectual Property Clause of the Constitution gives Congress the power to "promote the Progress of Science and useful Arts, by securing for limited Times to Authors and Inventors the exclusive Right to their respective Writings and Discoveries."[1] Why "secure"? Because there were state copyright statutes and most likely state common law rights of first publication for authors at the time of drafting and ratification of the Constitution. But these state rights and their accompanying remedies could be uncertain. They also suffered from being enforceable only within the particular state. Authors seeking to protect their works, such as Noah Webster, had to spend significant time and money obtaining and enforcing rights state-by-state, as well as the extra risk of different outcomes in different states. Thus, the IP Clause authorized Congress to "secure" whatever state authors' rights existed by providing an additional uniform, nationwide set of requirements, rights, and remedies for authors, for limited times.

Given this background, it seems clear that the federal copyright system should provide an equally effectual means for all copyright owning citizens to enforce their federally "secured" rights. Representative Collins' question focuses on the plight of acclaimed composer-performer Maria Schneider as a proxy for many individual creators and copyright holders who appear to be having a difficult time enforcing their copyrights in the same way that larger, deep-pocketed copyright owners can. Given the technological landscape, it is not clear that the current copyright system has adequately "secured" copyrights even these large interests, much less for copyright owners of more modest means such as Ms. Schneider. In the modern digital world then, Ms. Schneider is like Noah Webster in the pre-ratification period: spending far too much time and money away from socially-beneficial work just to protect legitimate rights to their works.

To answer Representative Collins' first specific question, yes, I agree that if the Committee concludes that small copyright owners are disproportionately harmed in the current environment of Section 512, then steps should be taken to ensure their rights are indeed secured. My only caution is that such steps should not undermine the ability of other copyright owners to enforce their rights. Further, any steps should not unduly restrict a reasonable fair use defense.

Because I agree with Representative Collins' first specific question, then I will use the remainder of this response to answer his second specific question. I propose three steps, two of which are proposals I submitted in my original testimony. First, the "notice

[1] U.S. CONSTITUTION, Art. I, § 8, cl. 8.

and stay-down" I described there would go a long way to helping small owners like Ms. Schneider secure their rights. Large owners may be able to afford full-time staff who can keep up with the "whac-a-mole" game so well described by various witnesses at the hearing: tracking and submitting notices on relentlessly reposted copies of their works. Smaller creator copyright owners simply cannot do this, without taking away from their socially valuable work. As I said earlier, this is not about potentially transformative fair use versions of works. Rather, it is about clear re-postings of untransformed copies of the entire work simply to make "free" versions available to the public (at the expense of the rights owner). This is particularly pernicious where the posters or the platforms hosting the files are monetizing these "free" versions such as through ads accompanying the pirated content. At the same time, "notice and stay-down" conforms to my caution above, in that is does not disfavor larger owners just to help smaller ones. It also helps large owners.[2] But just as the proportionate burden on small owners is higher in the digital piracy world, the proportionate benefit to them of "notice and stay-down" is higher as well. It also should not impact reasonable fair use defenses as it targets only works that have already received a take-down notice.[3]

Second, the "red flag' amendments I proposed would require online service providers (OSPs) to in effect help smaller creator owners like Ms. Schneider by being more aware of potential infringement on their sites and not institutionalize a "blind eye" approach to piracy. Strengthening the weaker version of willful blindness that courts are currently using (the OSP must have direct knowledge of the infringement) would not only require OSPs to help in the fight against piracy—in exchange for the valuable safe harbor they receive under the law—but it could also begin changing the culture of copyright contempt as pirates realize that the OSPs are no longer complicit with them in the "nudge, wink" manner that some OSPs currently signal. Like the prior proposal, this helps larger copyright holders as well. But the effect is proportionately larger for smaller creator-owners like Ms. Schneider who are particularly hurt by the copyright contempt culture because pirates and complicit OSPs know these smaller players are even less able to purse their rights in take-down notices and other mechanisms. The proposal need not negatively impact reasonable fair use either, in that the willful blindness standard could be tailored to re-posted files and/or copies of the entire work in line with the first proposal above.

Third, which I did not address in my original testimony, is that the Committee encourage the Copyright Office to continue exploring the latter's copyright "small claims court" initiative.[4] In the abstract, a small claims court that could streamline the process

[2] As an additional benefit, my proposal helps start-ups too because under "notice and stay-down" they can allocate less staff time to dealing with take down notices. Why? Because they will have a greatly reduced volume of such notices—to wit, this should eliminate the follow-on notices to take down repostings of previously taken down content. For example, rather than having five notices—one for the initial posting and four for four re-postings—the start-up would have only one notice for the initial posting

[3] Where the poster believes they had the right to post the work, they can file a counter-notice. Where that happens, the parties can resolve whether the posting was authorized or a fair use, either through private discussion or in court. My proposal cuts out the volume of re-postings and follow-on take-down notices that unnecessarily clog the system while the initial take-down is being resolved.

[4] http://www.copyright.gov/docs/smallclaims/.

and reduce the costs of copyright enforcement would be a boon to creator-owners like Ms. Schneider. As an attorney and law professor I know well how expensive intellectual property litigation has become. On the patent side, it is sometimes referred to as the "sport of kings." While it may not be quite as bad on the copyright side, it can still be out of reach for individuals and small copyright owners of middle class or moderate means. But rights are not secured for *all* owners when only the deep-pocketed can enforce them through litigation where necessary. At the same time, there are some concerns. A streamlined system can mean that important procedural protections are lost for both plaintiffs and defendants. It is often easy to be contemptuous of "technical" motions in court proceedings that seem to delay and distract, yet many of these are grounded in the fundamental "notice and a chance to be heard" principle of our civil procedure. That principle cannot be violated in the name of "streamlining." Similarly, the lower cost of a small claims court could tempt bad actors into abusing it. This could hurt all legitimate players in the copyright system. Reasonable fair use should also be as much of a defense here as in regular copyright litigation. Notwithstanding these concerns, the copyright small claims initiative holds much promise to level the playing field for small creator-owners.

In sum, creator-owners like Ms. Schneider have become the modern online equivalent of Noah Webster, forced to traverse a big space in a Sisyphean effort to protect their socially valuable creations. Without being able to obtain their fair share of the value of these works, they may not be able to go on producing and distributing new ones. The result is that both have had to spend so much time protecting existing works that it impacted their ability to create and distribute new works. But there should be a big difference between Mr. Webster and Ms. Schneider: the IP Clause and Congress's subsequent legislation were supposed to fix this problem by "securing" the exclusive rights of authors. Congress has repeatedly risen to the challenge and promise of new technologies and media in the past to amend copyright law so that it does in fact secure such rights. It can do so again and I am confident this Committee will find ways to re-secure Ms. Schneider's and other creator-owners' exclusive rights.

Question 2 (Representative Jeffries)

"In oral testimony before the House Judiciary Subcommittee on Courts, Intellectual Property and the Internet, Professor Bridy stated that courts have found "red flag knowledge" means "knowledge of facts or circumstances from which infringing activity is apparent and that the knowledge in question can't just be generalized knowledge, it has to be red flag knowledge of specific instances of infringement on a service provider's system."[5] At study of the case law, particularly in the Second and Ninth Circuits, yielded the same findings.[6]

Professor O'Conner [sic] disagreed with the court's findings, stating that he believes

[5] Oral Testimony, House Judiciary Committee Hearing on Section 512 of Title 17, Prof. Annemarie Bridy (March 13, 2014).

[6] *See Viacom Int'l Inc. v. YouTube Inc.*, 676 F.3d 19, 30-31 (2nd Cir. 2012).

Congress did not intend to narrow red flag knowledge in the way the courts have.[7] A review of the legislative history via the House and Senate Committee Reports seem to affirm Professor O'Conner's [sic] assessment. The House Committee Report for the Digital Millennium Copyright Act states: "if service provider becomes aware of a 'red flag' from which infringing activity is apparent, it will lose the limitation of liability if it takes no action."[8] The report continues: "[i]f . . . and Internet site is obviously pirate, then seeing it may be all that is needed for the service provider to encounter a "red flag."[9] Similarly, the Senate Committee Report on Section 512 says similarly that the question of red flag knowledge is simply "whether infringing activity would have been apparent to a reasonable person operating under the same or similar circumstances."[10]

Both the House and Senate Committee Reports seem to indicate that "red flag knowledge" requires a broader awareness of pirated as compared to actual knowledge which is distinguished in both Reports as requiring "*awareness of facts* or circumstances from which infringing activity is apparent."[11] In other words, it seems Congress intended the "actual knowledge" and the "red flag knowledge" standards to be two separate tests which is why they are located in separate provisions of the statute.

Question to Professors Bridy and O'Conner [sic]: Is it reasonable to have an "actual knowledge" prong and a "red flag knowledge" prong designed to represent two distinct statutory pathways that have been interpreted by courts in a manner that closely mirrors each other?"

Response

In short, no, it is not reasonable for courts to essentially conflate these two different prongs into the same judicial test. A plain textual reading of the provision itself also reveals the clear distinction between them:

(c) Information Residing on Systems or Networks At Direction of Users.—

(1) In general.— A service provider shall not be liable for monetary relief, or, except as provided in subsection (j), for injunctive or other equitable relief, for infringement of copyright by reason of the storage at the direction of a user of material that resides on a system or network controlled or operated by or for the service provider, if the service provider—

(A)

(i) does not have actual knowledge that the material or an activity

[7] Oral Testimony, House Judiciary Committee Hearing on Section 512 of Title 17, Prof. Sean M. O'Connor (March 13, 2014).
[8] H.R. REP. NO. 105-551, pt. II, at 53 (1998).
[9] *Id.*
[10] S. REP. NO. 105-109, at 20.
[11] H.R. REP. NO. 105-551, pt. II, at 53 (1998) (emphasis added); *See* S. REP. NO. 105-109, at 44.

using the material on the system or network is infringing;

(ii) *in the absence of such actual knowledge*, is not aware of facts or circumstances from which infringing activity is apparent; or

(iii) upon obtaining such knowledge or awareness, acts expeditiously to remove, or disable access to, the material;[12]

The red flag provision is not only a separate provision, as Representative Jeffries points out, but it is a separate provision *set against* the actual knowledge provision within the same subsection (A). Further, the red flag provision (subsection (ii) in the statute) is prefaced by the phrase "in the absence of such actual knowledge," which makes abundantly clear that the red flag "facts and circumstances" *must* be something different from "actual knowledge."

The only potential flaw in the statutory text is the choice of disjunction rather than conjunction. Thus, if the disjunct form is taken too literally, then so long as any of the three conditions applies the service provider seems to be eligible for the safe harbor. This could mean that if actual knowledge is not present, then the fact finder need look no further to see if the other conditions are also met. But the substance of the provision does not support this. Rather, the substance indicates these are all conditions that must be met. Thus, it may be that Congress should amend Section 512(c)(1)(A) by changing "or" to "and" (and thus from disjunct to conjunct) at the end of subsection (ii). However, the text of Subsection (iii) might also be reworded to clarify what seems to be its intended condition: *if* actual knowledge or red flag awareness are obtained, *then* service provider has acted expeditiously to remove or disable the material. Rewritten into statutory type text, rather than as a propositional logic statement, it could read: "in the event that service provider has obtained such knowledge or awareness, it acts expeditiously to remove, or disable access to, the material." Section 512(c)(1)(A) would then read as follows (with edits shown in underline and strikethrough):

(c) Information Residing on Systems or Networks At Direction of Users.—

(1) In general.— A service provider shall not be liable for monetary relief, or, except as provided in subsection (j), for injunctive or other equitable relief, for infringement of copyright by reason of the storage at the direction of a user of material that resides on a system or network controlled or operated by or for the service provider, if the service provider—

(A)

(i) does not have actual knowledge that the material or an activity using the material on the system or network is infringing;

(ii) in the absence of such actual knowledge, is not aware of facts or

[12] 17 U.S.C. § 512(c)(1)(A) (emphasis added).

circumstances from which infringing activity is apparent; ~~or~~and

(iii) ~~upon~~in the event that service provider obtain~~ings~~ such knowledge or awareness, it acts expeditiously to remove, or disable access to, the material;

This then would clearly reinforce Congressional intent that *all three* of these conditions must be met for a service provider to be eligible for the safe harbor.

Stepping back, this question quite appropriately focuses on whether Section 512 is being correctly interpreted by the courts, presumably as part of the larger question of whether Congress should consider amending the Section at all. It may thus be true that there is no need for modification of Congress' *position* on this particular matter, as the way in which Representative Jeffries describes the legislative intent is indeed consonant with my views on Congressional intent behind the red flag knowledge provision. However, the question remains whether Congress needs to act to correct what appears to be misinterpretation of Section 512 (or at least Congress' intent in passing it) by the courts. It may be that Congress could wait to see if a test case on this reaches the Supreme Court. But this could take many years. Thus, it might be better for Congress to amend the Section to clarify its intent on the red flag provision without waiting for such a case.

United States House of Representatives
113th Congress
Committee on the Judiciary
Subcommittee on Courts, Intellectual Property, and the Internet

Responses to Questions for the Record
Annemarie Bridy
Alan G. Shepard Professor of Law
University of Idaho College of Law

April 29, 2014

Hearing on:
"Section 512 of Title 17"

Thursday, March 13, 2014
9:30a.m.
2141 Rayburn House Office Building

Question Offered by Representative Doug Collins

In providing that Congress has the power (and I believe responsibility) of "securing" the exclusive Rights of Authors and Inventors, the Constitution doesn't make any distinction between small copyright owners like Ms. Schneider and large copyright owners. But there can be little argument that the latter have greater resources to protect their investments in creating new works and greater leverage in negotiating with large intermediaries (like Google) who make available and generate substantial profits from content that is infringing.

If this Committee concludes small copyright owners are disproportionately harmed by infringements of their works, would you agree we should take steps to ensure that their exclusive rights are "secured" as the Founders intended? If yes, what steps do you think we should take? If no, why do you feel that Section 512 should only provide a remedy for those with enormous resources to monitor the use of their works online all over the globe?

Response to Question Offered by Representative Doug Collins

Copyright enforcement in the digital networked environment is an enormously resource-intensive proposition for both copyright owners and online service providers (OSPs). As a matter of policy, it is critical to fairly allocate the costs of online enforcement between rights owners and OSPs. Congress, in enacting Section 512, fairly allocated enforcement costs to allow both copyright owners and OSPs of all shapes and sizes to grow their businesses and, simultaneously, the Internet itself. As Ms. Schneider's testimony at the hearing in March made clear, the Internet has been a boon to independent musicians who want to release music on their own and reach their fans directly, without the intermediation of recording labels. Small and independent musicians can now forego contracts with labels and enjoy greater control over their creative process and a greater share of revenue from the sale of their works. They can also retain ownership of their copyrights—a substantial benefit that brings with it responsibility for enforcement.

Enforcing copyrights online is a significant challenge for copyright owners of all sizes, particularly small copyright owners. It is also a significant challenge for OSPs of all sizes, particularly small OSPs. The question, from a policy perspective, is whether it would further the underlying purposes of the DMCA to require OSPs of all sizes to shoulder a heavier share of the enforcement burden than they do now for the benefit of small copyright owners who lack the resources of the major labels. I believe it would not, and I believe there are other avenues worth exploring for helping small copyright owners to more easily and efficiently navigate the notice and takedown process.

One source of help for small copyright owners proposed at the hearing was an amendment of section 512 to prescribe a "notice and staydown" condition for the section 512 safe harbor. "Notice and staydown" is a clever turn of phrase. Differing by just four letters from "notice and takedown," which is already required under the DMCA, it creates the seductive but false impression that requiring OSPs to keep their systems perpetually free of previously noticed material would represent only a modest additional burden. In reality, a "notice and staydown" requirement would radically alter the existing contours of the safe harbors by repealing section 512(m) and effectively imposing a 24-7-365 monitoring obligation on all OSPs, no matter their

size or available resources. Remaking the DMCA in such a way would allow copyright owners to completely externalize—and would require OSPs to completely internalize—the enforcement costs that go along with the generous bundle of rights that Congress secures to copyright owners large and small through Title 17's statutory monopoly.[1]

With respect to the plight of small copyright owners, it is a fact across the board in our legal system that those with fewer resources are positioned less well to vindicate their rights than those with more resources. To acknowledge that fact is not to embrace it; it is only to recognize that small copyright owners are not uniquely disadvantaged when compared with other small players our legal system, including small OSPs. Although wildly successful online platforms like Google and Facebook loom large in our cultural consciousness, the vast majority of OSPs are neither as large nor as wealthy as the big players. Even if one accepts the argument that major OSPs are in a good financial position to subsidize enforcement for small copyright owners, small- and medium-sized OSPs are not similarly situated. If Congress acts to allocate a larger share of enforcement costs to all OSPs regardless of *their* size and resources, we will likely see fewer new entrants in the Internet startup space, and existing small platforms may disappear. That outcome would undermine the DMCA's express goal of facilitating the continued growth of innovative online services.

A better solution to the problem of differential access to enforcement resources, and one less likely to result in unintended consequences for the online ecosystem, would be to increase access for small players to enforcement tools that are currently available only to big players. Automation has changed the landscape of the DMCA notice and takedown process over the course of the last fifteen years. Small copyright owners and small OSPs have both been left behind when it comes to increasing the efficiency and reducing the cost of the notice and takedown process. That is a real problem, but it is one that the emerging market for online anti-piracy services may help to solve.[2] Competition in the market for high-quality, automated monitoring tools is increasing, which should bring prices down and create options for small copyright owners who are currently navigating the notice and takedown process by hand. The

[1] In addition to granting a wide range of rights, the Copyright Act secures the rights of the copyright owner through "a potent arsenal of remedies." Sony Corp. v. Universal City Studios, Inc., 464 U.S. 417, 433-34 (1984).
[2] *See* Ramon Lobato and Julian Thomas, *The Business of Anti-Piracy: New Zones of Enterprise in the Copyright Wars*, 6 INT'L J. COMMUNICATION 606, 615 (2012) ("Recent years have seen a proliferation in commercial takedown operations, to the extent that there are now specialist companies catering to different niches.").

quality of automated tools is of course critical, particularly to the extent that they involve Internet bots, because the goal of automating the process is to improve it and not simply to multiply notices.[3] As the market for monitoring tools develops, user-generated content (UGC) platforms can be encouraged in the near term to create fillable online forms that enable small copyright owners to electronically submit DMCA-compliant notices. Many of the larger UGC platforms already have such forms, as I mentioned in my testimony, and I don't think they are expensive or technically difficult to develop and implement.

To further the end of increasing access to better tools, small copyright owners should investigate the feasibility of aggregating their resources to affordably contract for reputable third-party monitoring services that are now marketed only to enterprise clients.[4] There is strength, and there are lower transaction costs, in numbers. Small copyright owners can increase their clout and resources by making common cause with one another and seeking a collective solution to their individual problems. Participation in the Copyright Alert System by the American Association of Independent Music (A2IM) and the Independent Film and Television Alliance (IFTA) might serve as a model for how smaller copyright owners can band together to get a place at the table with the big players when it comes to non-legislative, business-driven approaches to online enforcement. Inquiry by policy makers into the state of the market for third-party monitoring tools may produce useful insights and may encourage providers to find profitable ways to deliver services to segments of the market that are currently unserved.

Personal stories like Ms. Schneider's are compelling. Her frustration is understandable. We need to be careful, however, not to make copyright policy that robs Peter to pay Paul; we don't want to help small copyright owners by hurting small OSPs. A "notice and staydown" regime would impose on OSPs a wholesale monitoring obligation that is antithetical to the current structure of the DMCA and that would be crippling as a practical matter for most OSPs. In lieu of legislating in response to compelling anecdotes, we should seek a more rigorous and systematic understanding of how the notice and takedown system is currently working—and not working—for copyright owners and OSPs of all sizes. Grasping the nature and scope of the

[3] *See id.* (noting that many commercial operators have been accused of sending indiscriminate takedown "spam," which negatively affects many legitimate uses and users). It compromises the goal of effective and efficient enforcement when OSPs receive a large volume of notices that do not comply with the requirements outlined in section 512(c)(3)(A).
[4] MarkMonitor is an example: https://www.markmonitor.com/download/ds/ds-MarkMonitor_AntiPiracy.pdf.

problem empirically is the best next step to identifying workable solutions. Researchers at the American Assembly at Columbia University and the University of California at Berkeley are currently studying how the notice and takedown process is impacting operations and expenses for a range of actors in the online ecosystem, including large and small OSPs.[5] Changes to policy in this complicated and continuously evolving area should be broadly informed and evidence-based. We are only now engaging in the important process of getting the information and evidence that we lack.

[5] *See* The Takedown Project, http://takedownproject.org/.

Question Offered by Representative Hakeem Jeffries

In oral testimony before the House Judiciary Subcommittee on Courts, Intellectual Property and the Internet, Professor Bridy stated that courts have found "red flag knowledge" means "knowledge of facts or circumstances from which infringing activity is apparent and that the knowledge in question can't just be generalized knowledge, it has to be red flag knowledge of specific instances of infringement on a service provider's system."[6] A study of the case law, particularly in the Second and Ninth Circuits, yielded the same findings.[7]

Professor O'Conner disagreed with the courts' findings, stating that he believes Congress did not intend to narrow red flag knowledge in the way that the courts have.[8] A review of the legislative history via the House and Senate Committee Reports seem to affirm Professor O'Conner's assessment. The House Committee Report for the Digital Millennium Copyright Act states: "if the service provider becomes aware of a 'red flag' from which infringing activity is apparent, it will lose the limitation of liability if it takes no action."[9] The report continues: "[i]f. . .an Internet site is obviously pirate, then seeing it may be all that is needed for the service provider to encounter a "red flag."[10] Similarly, the Senate Committee Report on Section 512 says similarly that the question of red flag knowledge is simply "whether infringing activity would have been apparent to a reasonable person operating under the same or similar circumstances."[11]

Both the House and Senate Committee Reports seem to indicate that "red flag knowledge" requires a broader awareness of pirated as compared to actual knowledge which is distinguished in both Reports as requiring *"awareness of facts* or circumstances from which infringing activity is apparent."[12] In other words, it seems that Congress

[6] Oral Testimony, House Judiciary Committee Hearing on Section 512 of Title 17, Prof. Annemarie Bridy (March 13, 2014).
[7] *See* Viacom Int'l Inc. v. YouTube Inc., 676 F.3d 19, 30-31 (2d Cir. 2012).
[8] Oral Testimony, House Judiciary Committee Hearing on Section 512 of Title 17, Prof. Sean M. O'Connor (March 13, 2014).
[9] H.R. REP. NO. 105-551, pt. II, at 53 (1998).
[10] *Id.*
[11] S. REP. NO. 105-109, at 20.
[12] H.R. REP. NO. 105-551, pt. II, at 53 (1998) (emphasis added); *See* S. REP. NO. 105-109, at 44.

intended the "actual knowledge" and the "red flag knowledge" standards to be two separate tests which is why they are located in separate provisions of the statute.

Question to Professors Bridy and O'Conner: Is it reasonable to have an "actual knowledge" prong and a "red flag knowledge" prong designed to represent two distinct statutory pathways that have been interpreted by courts in a manner that closely mirrors each other?

Response to Question Offered by Representative Hakeem Jeffries

I respectfully disagree with the question's premise that the legislative history of the DMCA affirms Professor O'Connor's assessment that courts have interpreted the scope of "red flag" knowledge too narrowly. Both of the legislative reports cited in the question make clear that Congress intended for Title II to provide certainty to service providers concerning their legal exposure for infringements.[1] A broad and indeterminate scope for "red flag" knowledge, such as that advocated by Professor O'Connor, is inconsistent with the stated policy goal of having clear ground rules for service providers to follow in order to be eligible for the safe harbors.

The bounded definition of "red flag" knowledge that has been adopted in the Second and the Ninth Circuits is fully consistent not only with the legislative history but also with the language and structure of section 512. The courts that have considered this issue agree, without qualification or misgiving, that potentially disqualifying "red flag" knowledge is the awareness of facts or circumstances from which specific instances of infringement would be apparent to a reasonable person.[2] A close reading of the cases reveals that courts have not, in fact, interpreted the actual knowledge and "red flag" knowledge standards "in a manner that closely mirrors each other."[3] Rather, they have carefully distinguished actual knowledge from "red flag" knowledge based on well-established principles concerning the mental states of accused actors. In keeping with the language of the statute, they have developed two separate tests—one subjective (actual knowledge) and the other objective ("red flag" knowledge)—each of which has reference to specific instances of infringement.[4]

Unlike actual knowledge, which is measured by a subjective standard, "red flag" knowledge is measured by an objective standard.[5] When trying to determine if an OSP had actual knowledge of specific infringing material, the court must inquire into what the OSP *subjectively*

---

[1] *See* H.R. REP. 105-551, at 49-50 (1998) ("[Title II] provides greater certainty to service providers concerning their legal exposure for infringements that may occur in the course of their activities."); S. REP. 105-190, at 2 (1998) ("Title II will provide certainty for copyright owners and Internet service providers with respect to copyright infringement liability online.").
[2] *See* Viacom Int'l, Inc. v. YouTube, Inc., 676 F.3d 19, 32 (2d Cir. 2012); UMG Recordings, Inc. v. Shelter Capital Partners LLC, 718 F.3d 1006, 1022 (9th Cir. 2013).
[3] Question Offered by Representative Hakeem Jeffries.
[4] *See Viacom*, 676 F.3d at 32 ("The red flag provision, because it incorporates an objective standard, is not swallowed up by the actual knowledge provision under our construction of the § 512(c) safe harbor. Both provisions do independent work, and both apply only to specific instances of infringement.").
[5] *See id.* at 31.

knew. When trying to determine if an OSP that lacked actual knowledge of specific infringing material instead had "red flag" knowledge of that material, the court must engage in a different inquiry: it must ask whether the existence of the material in question would have been *apparent to a reasonable person* given the attendant facts and circumstances, regardless of what the OSP subjectively knew. The Senate Report, which defines "red flag" knowledge in objective terms—"whether infringing activity would have been apparent to a reasonable person operating under the same or similar circumstances"[6] —jibes perfectly with this reading of the statute. As the Second Circuit helpfully explained in *Viacom v. YouTube*, the difference between "red flag" knowledge and actual knowledge isn't between generalized knowledge and specific knowledge, as Professor O'Connor would have it; the difference is between subjective knowledge and objective knowledge of specific instances of infringement.[7]

The case law on contributory copyright infringement going back to the Supreme Court's seminal decision in *Sony v. Universal* teaches that courts must not cavalierly impute knowledge of third-party infringements to those who distribute products or operate services that have both infringing and substantial noninfringing uses.[8] The Court in *Sony* recognized that such casual imputation of knowledge would have a chilling effect on innovation. The DMCA safe harbors were crafted in the spirit of *Sony* to protect good faith OSPs whose services, given their capabilities, would inevitably be used by ignorant or bad actors to infringe copyrights. Congress did not condition safe harbor for OSPs on their monitoring their services[9] or making legal judgments on the fly about whether specific content is infringing or not.[10] It is no accident that

---

[6] S. REP. 105-190, at 20 (as quoted in the Congressman's question).
[7] *See Viacom*, 676 F.3d at 31.
[8] *See* Sony Corp. v. Universal City Studios, Inc., 464 U.S. 417, 439 (1984) (declining to impose secondary liability on the theory that "[defendants] have sold equipment with constructive knowledge of the fact that their customers may use that equipment to make unauthorized copies of copyrighted material").
[9] *See* 17 U.S.C. § 512(m) (providing that "nothing in this section shall be construed to condition the applicability of subsections (a) through (d) on . . . a service provider monitoring its service or affirmatively seeking facts indicating infringing activity, except to the extent consistent with a standard technical measure complying with the provisions of [§ 512(i)]"). The "standard technical measures" in section 512(i) are defined as measures that *copyright owners* employ for the protection of their works and that OSPs can accommodate without having to incur substantial costs or burdens. *See* 17 U.S.C. § 512(i).
[10] *See* S. REP. 105-190, at 49 ("The common-sense result of this 'red flag' test is that [OSPs] would not be required to make discriminating judgments about potential copyright infringement."). The wisdom of this choice was made clear in *Viacom v. YouTube*, when Viacom was forced to amend its complaint twice to remove from its list of clips-in-suit hundreds of clips that its own employees had uploaded. *See* "Notice of Dismissal of Specified Clips With Prejudice" (Case No. 1:07-CV-02103-LLS, Feb. 26, 2010) (referring to the hundreds of video clips that Viacom had initially identified as "infringing" but which were subsequently withdrawn from the list of works in

the notice requirements in section 512(c)(3)(A) require the sender to specifically identify both the infringed work and the location where the work can be located, among other requirements. OSPs are not required or expected under the DMCA to guess about what material is infringing or where to find it. It is also no accident that notices that fail to "comply substantially" with section 512(c)(3)(A) are ineffective under the statute to trigger the OSP's obligation to remove or disable access to content. The statute plainly states that defective notices "shall *not* be considered . . . in determining whether a service provider has actual knowledge or is aware of facts or circumstances from which infringing activity is apparent."[11] If defective notices concerning specific alleged infringements are insufficient to establish "red flag" knowledge, then Congress surely cannot have intended for "red flag" knowledge to mean free-floating, generalized knowledge of infringement. It can only have intended the more circumscribed scope that the courts have given it.

Congress knew when it enacted the DMCA that the substantive law of secondary liability was still evolving in the domain of digital copyrights: "Rather than embarking upon a wholesale clarification of these doctrines, the Committee decided to leave current law in its evolving state and, instead, to create a series of 'safe harbors,' for certain common activities of service providers."[12] With the case law and the technology both still relatively undeveloped, Congress made a conscious decision to let the courts work out the intricacies of contributory and vicarious liability, which they have subsequently done without disagreement, largely in cases involving assertion of the DMCA safe harbors. The purpose of the safe harbors was to create certainty for copyright owners and OSPs. The interpretation of "red flag" knowledge on which the courts have agreed both advances the goal of creating certainty and gives coherence to the language and structure of section 512 as a whole. A broader interpretation would do neither, which is why the courts have uniformly declined to adopt one.

---

suit). How can OSPs be expected to know, without notice, what works are infringing when copyright owners themselves can often be mistaken?

[11] 17 U.S.C. § 512(c)(3)(B) (emphasis added).

[12] S. REP. 105-190, at 19.

By eMail and Regular Mail **April 30, 2014**

Congressman Bob Goodlatte
Chairman
Committee on the Judiciary
Subcommittee on Courts, Intellectual Property and the Internet
United States House of Representatives
2138 Rayburn House Office Building
Washington, DC 20515-6216

Re: March 13, 2014 Hearing on "Section 512 of Title 17"

Dear Chairman Goodlatte:

Please accept this letter in response to your April 15, 2014, letter containing Congressman Doug Collins' question for the record relating to the above-referenced hearing. We appreciate Congressman Collins' question, which asks in relevant part:

> **If this Committee concludes small copyright owners are disproportionately harmed by infringements of their works, would you agree we should take steps to ensure that their exclusive rights are 'secured' as the Founders intended? If yes, what steps do you think we should take? If no, why do you feel that Section 512 should only provide a remedy for those with enormous resources to monitor the use of their works online all over the globe?**

Elsevier recognizes that the challenges faced by small copyright owners and individual artists under the current DMCA 512 regime can be daunting and does not believe that improvements to the current regime should solely benefit large copyright holders like Elsevier. Nor does Elsevier believe that reforms should be reserved for only small owners and individual creators. The system needs to be improved for all rights holders and all other stakeholders in the internet ecosystem.

In most instances, as Congressman Collins points out, large copyright owners have more resources than small and individual owners to investigate copyright infringements and to take actions to protect their investments and works (though of course large copyright owners usually have much larger portfolios of works to cover, as well as their own internal and external creators to protect). The current DMCA system, however, does not work effectively for both large and small copyright owners alike, whether they are corporate owners or individual musicians, artists, authors or other creators. This is particularly true with respect to the problem of serial re-uploading of copyrighted works (the "whac-a-mole" problem).

Elsevier Inc. 360 Park Ave. South
New York, NY 10010 USA
Tel +1 (212) 989 5800 | Fax +1 (212) 633 3990 | www.elsevier.com

Elsevier's principal recommendations to remedy this situation, reflected in both my written and oral statements to the Subcommittee, are: (i) appropriately tailored voluntary "standard technical measures" (e.g. filtering mechanisms), established through a multi-stakeholder standard setting process, to help prevent the re-uploading and sharing of infringements and (ii) clearer and better enforced repeat infringer policies. Commercially reasonable and effective filtering mechanisms will benefit all copyright owners, regardless of size or relative resources, as well as other good faith participants in the system. They will reduce the need for constant repetitive notices for the same works and reduce the overall volume and the burdens posed by takedown requests for senders and responders. Transparent repeat infringer policies, if meaningfully implemented, will help deter and prevent the subset of ill-intentioned users who are often responsible for a large portion of the serial re-uploading of infringements that plague certain sites — whether the infringed works are Elsevier books or Ms. Schneider's songs.

With respect to filtering, when a copyright owner like Ms. Schneider or Elsevier sends a valid takedown notice to a site hosting infringing material, a standard filtering process could ensure that future attempts to upload or share the same (or sufficiently identical) material would be prevented. In addition, copyright owners, like Ms. Schneider or Elsevier, could voluntarily contribute "reference" copies of their works to sites for the same purpose, a practice that both Ms. Schneider and I each recommended in our testimony. In my testimony, I mentioned www.scribd.com as an example of a site that utilizes both of these approaches for tailored filtering of user uploads that infringe publishers' works. Another example is www.dropbox.com, which is a rapidly growing and well known "cloud storage" site that prevents the sharing of works for which it has previously received valid takedown notices.

My statement also mentions that once "standard technical measures" are agreed upon in a multi-stakeholder process, Congress might have to address certain sites that refuse to voluntarily adopt them despite the fact that they need the measures the most – e.g., sites that technically comply with takedown requirements, but are structured to attract unauthorized uploading, re-uploading and public sharing of files that infringe copyrighted works. The suggestions for dealing with this recalcitrant subset of sites that exploit the takedown system would benefit all rights holders, large and small: the sites could lose safe harbor protection for refusing to adopt appropriate measures being implemented by peer sites and services, or courts could exercise their discretion under DMCA 512(j) to order limited injunctive relief requiring such sites to prevent the re-upload of specific works in suit even where the 512(c) safe harbor against monetary damages may apply.

Similarly, Elsevier and the Association of American Publishers' recommendations for addressing "Non-Compliant" sites that perhaps reside in "safe havens" for infringement and refuse to substantially comply with takedown notices or other statutory or judicial requirements, would benefit large and small copyright owners alike. Where a US court with jurisdiction over a "Non-Compliant" site finds that it does not qualify for protection under any DMCA safe harbor and that the site is liable for copyright infringement, the court should have authority to enter orders requiring US based third parties that provide services to the site -- including advertising placement services, payment processors, search engines, server hosts, and domain name registrars — to suspend those services.

Beyond the repetitive infringement problem, Elsevier is sympathetic to Ms. Schneider's frustrations as an individual creator navigating the requirements and intricacies of site-specific takedown processes, the burdens of which do not affect large copyright owners with established vendor-supported takedown practices in the same way. So too the concern raised by Ms. Schneider about being identified by name in a negative manner for sending valid takedown notices, which is another practice that impacts individual creators in a different way than it does corporate copyright holders. We believe these concerns can and should be addressed in the ongoing USPTO multi-stakeholder "roundtables" covering current DMCA processes and practices.

Elsevier also agrees that large copyright owners generally have more resources to negotiate with large "intermediaries," although we would note that such negotiations to date have been slow, arduous and mostly unsuccessful even for larger copyright owners. For that reason, Elsevier urges a "government-guided" multi-stakeholder process to establish the range of measures that can be deployed to address online infringement. Without further government encouragement, voluntary measures by intermediaries, including in the area of technical measures like filtering, will not come to fruition in a timely manner.

In sum, we believe there should be a fair and level playing field for all rights holders and stakeholders, regardless of size or resources. We also believe that the detailed recommendations by Elsevier, the Association of American Publishers on behalf of the publishing industry as a whole, and other groups within the wider copyright industries, are a good start for furthering best practices, collaboration on standard technical measures, and other reforms that can benefit all interested parties.

Respectfully submitted,

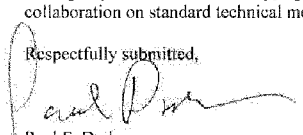

Paul F. Doda
Global Litigation Counsel
Elsevier Inc.

Google

April 29, 2014

Response of Katherine Oyama, Sr. Copyright Policy Counsel, Google Inc.
House Judiciary Subcommittee on Courts, Intellectual Property and the Internet
Hearing on "Section 512 of Title 17," March 13, 2014

Question For the Record from Representative Doug Collins for Katherine Oyama

1. **In providing that Congress has the power (and I believe responsibility) of "securing" the exclusive Rights of Authors and Inventors, the Constitution doesn't make any distinction between small copyright owners like Ms. Schneider and large copyright owners. But there can be little argument that the latter have greater resources to protect their investments in creating new works and greater leverage in negotiating with large intermediaries (like Google) who make available and generate substantial profits from content that is infringing.**

   If this Committee concludes small copyright owners are disproportionately harmed by infringement of their works, would you agree we should take steps to ensure that their exclusive rights are "secured" as the Founders intended? If yes, what steps do you think we should take? If no, why do you feel that Section 512 should only provide a remedy for those with enormous resources to monitor the use of their works online all over the globe?

In enacting the DMCA, Congress struck a careful balance and created the U.S. legal foundation for the Internet we know today. As many have noted, the DMCA made it possible to launch and operate online platforms like eBay, Amazon, YouTube, Facebook, and Twitter, which in turn have unleashed new sources of creativity, economic development, and jobs. At the same time, the courts have made it clear that the DMCA safe harbors provide no shelter for illegitimate sites seeking to shirk their responsibilities.

We agree that small and medium size entities — independent creators and service providers alike — face some challenges submitting and processing takedown notices to ensure effectiveness, accuracy, and efficiency. However, Section 512's notice-and-takedown process has vastly improved the ability of small copyright owners to police their works online. Prior to the DMCA, the only mechanism available to copyright owners, large and small, was an infringement suit in federal court. The DMCA created a system that enabled copyright owners to obtain expeditious takedown without the need for the expense of copyright registration and federal court litigation. This is not to say there is not more that can be done to continue improving the notice-and-takedown process for everyone under our current system — Google's own processes continue to

improve and evolve in response to the needs of both large and small copyright owners. But re-opening the DMCA would risk injecting legal uncertainty into a well-established framework on which every Internet company — including thriving online platforms used by creators to make, distribute, and monetize online content — relies.

At Google, we have made extensive efforts to make it easy for anyone, including small and independent creators, to submit takedown notices. For example, Google maintains a public web form in many languages where anyone may submit DMCA takedown notices 24 hours a day by answering a simple set of interactive questions. This is supplemented by "trusted submitter" programs to accommodate the needs of rightsholders and enforcement vendors who use automated means to submit large numbers of notices to our products. And, of course, Google has never charged copyright owners to submit a DMCA takedown notice. These efforts to make the process easy to use for all copyright owners allowed thousands of different submitters to send Google DMCA notices in 2013 from nearly every country on the globe, in 70 different languages.

Over the past three years, we have also seen the emergence of a robust, competitive market aimed at providing enforcement services to copyright owners. Today, firms like Marketly, MarkMonitor, and Degban offer their detection services to copyright owners and their industry associations. This has made it cheaper and easier for copyright owners large and small to send notices to service providers. Furthermore, as copyright owners and enforcement vendors continue to deploy new technologies to identify uses of their works online, we expect the cost per notice to continue to drop, which may make it easier for independent creators to rely on the expertise of this growing vendor base in managing their takedown strategy.

In addition, Google is actively participating in the Department of Commerce's Internet Policy Task Force multistakeholder forum on improving the operation of the DMCA notice-and-takedown system. In these ongoing conversations with copyright owners, entertainment companies, representatives of the more than 66,000 service providers who are registered DMCA copyright agents, and users, we are eager to share best practices in the hopes that some of our own process investments, such as the public web form in multiple languages and the copyright section of our Transparency Report, can contribute to more accurate and efficient notice-and-takedown systems across the web.

Lastly, we are deeply committed to ensuring that our products provide meaningful tools to creators of all kinds – from large entertainment companies to independent creators. For example, YouTube's community includes not only a billion individual users, but also more than one million partner channels that earn money from their YouTube videos. YouTube has developed a series of programs to help content partners thrive, including partnerships with every major record label and with hundreds of collecting societies, independent labels, and music publishers, to license recorded music on the site. As a result of partnerships like these, YouTube generates hundreds of millions of dollars each year for copyright owners of all kinds, large and small. From musicians to athletes, teachers to comedians, thousands of creators are now earning six-figure incomes from their YouTube channels.

We make available free online resources, such as our Creator Playbook, to help YouTube creators of all sorts develop their audience and monetize their work. We have also opened new collaborative spaces in Los

Angeles, London, and Tokyo (and an updated space in New York forthcoming) where YouTube partners can shoot and edit their content. In 2013, YouTube Spaces welcomed 21,000 people around the world who attended 150 workshops and participated in nearly 1,500 collaborations. Overall, 2,500 videos were created, generating more than 250 million views and more than 20 million hours of watch time (or the equivalent of more than 2,200 years). We are encouraged that these facilities not only help creators develop expertise, but also provide a physical place for collaboration and creativity.

Thank you for your attention to the important matters of copyright, creativity, and innovation on the Internet, and we look forward to continuing our conversations with you and your staff.

Response to Questions for the Record from Maria Schneider, Grammy Award Winning Composer/Conductor/Producer, Member of the Board of Governors, New York Chapter of the Recording Academy

Hearing on:
"Section 512 of Title 17"

Thursday, March 13, 2014

Response to Question by Representative Doug Collins

Congressman Collins,

I agree with you that Congress needs to be proactive in protecting the rights of small copyright owners as the Founders intended. Small copyright owners do not have the resources to protect themselves from online infringement. In the music industry, many of us independent artists take on tremendous financial risks to pay for our records in an impossible-to-navigate environment full of rampant theft. And one little known fact is that many artists, even those on record labels, are paying for their own records these days. Bigger record companies are definitely better equipped to play whack-a-mole all day, and surely have more leverage against Google and others. But still, it's a tremendous waste of financial and human resources. That's hardly a DMCA success story. Independent musicians are now a significant industry with a very weak collective voice amidst all the big players, and the collective frustration and anger is rapidly growing.

As I testified to on March 13th, I believe there are simple, common sense changes Congress can make to Section 512 that will provide independent musicians, like me, better protection. And it just so happens that what will help us will also help the bigger players – these are win-win solutions.

My three solutions were: a) take down means stay down b) require companies like Google to educate users who are uploading c) create the equivalent of a "do not call" list where copyright owners can select a "do not post" option for their creative work.

Take down means stay down. The vast majority of my time in dealing with the DMCA is spent with the "repeat offenders." This would go away for everyone with this simple change in the law. The reality is that if we had a "take down means stay down" policy, it would be much more efficient for everyone, even Google, except for the people looking to unlawfully profit from others' copyrighted works. No one's legal rights are compromised with "stay-down." No legitimate business is compromised.

Educating Users before Posting. Congress already passed the Higher Educational Opportunity Act of 2008 (HEOA), putting an affirmative obligation on universities to educate their students about the importance of copyright. It has been a successful piece of legislation. The important concepts embodied in the HEOA should be extended beyond universities to simply require companies like Google to have its users acknowledge certain points before uploading, and to require companies like Google to educate its users. Of course, companies who rely on illegal uploads for profit resist such measures (measures which have been successfully embraced by universities under the HEOA) because they know that if they require some education before uploading, it will

clearly decrease the number of illegal uploads, which will decrease their profits. However, copyright is important enough to be a Constitutional right. It is common sense to require companies who are profiting handsomely from illegally posted content to educate their users about copyright rights before users can upload. An Internet industry that has systematically de-educated a generation about copyright can now be required to re-educate them, just as universities are required by law to do.

"Do Not Post" List. We all recall the invasion of our privacy and personal rights before the "do not call" list became the law of the land. We take it for granted now. Independent musicians should have the same option to protect their rights. Google's representative suggested at the hearing that to empower musicians in this way would somehow impact "fair use" rights of their users. But this is simply not true. Where there is an exact copy of one of my music recordings posted verbatim on YouTube for immediate worldwide distribution, there is no possible fair use justification. Period.

Musicians are not greedy. We only want what is fair. And we are more than willing to think creatively. But absent an agreed-upon construct that protects creators' constitutional rights**, it is not a burden to require nsers to seek my permission to use the Internet to publish to the entire world a verbatim copy of my mnsic.**

Letting a company operate under the safe harbor is hollow, if that company is handed every loophole to keep publishing infringing work on a world wide, unrestricted basis. And the DMCA indeed feels very hollow from a musician's perspective. Any company given safe harbor should have to adhere to these steps that would actually protect creators' rights.

Our laws should not support business models that rely on infringement in order to remain economically viable. With existence of channels for proper permission, and the possibility of rights-holders to choose how their work is used, I believe we'd have an environment where *more* business can happen, *legitimate* business in an environment that is sustainable for all parties: Internet companies, users and creators. The current environment is not sustainable. Business is indeed booming, but not for the vast majority of those that create and pay for the making of the music. For us, the losses are catastrophic.

My common sense solutions will stop the hemorrhaging and will not compromise anyone's legal rights.

Response to Follow-Up Questions for the Record from
Paul Siemiuski, General Counsel, Automattic Inc.

We serve millions of users through our publishing platform WordPress.com, and many of them are small artists, authors, photographers and creators. We place a high value on their creative work; in fact the original work of small, independent creators is the lifeblood of the 48 million websites that we host on our service.

In our experience, the remedies provided under 512 and the process for availing oneself of them, are flexible and accessible enough to serve the needs of copyright holders large and small. The DMCA notice form is standardized, by statute, so that anyone who owns a copyright can send a standard form letter to any website to identify infringing content for removal under the DMCA. So long as the letter includes the statutory requirements, the website will honor it. Moreover, many websites (including those hosted by Automattic) have created a standard form DMCA complaint form (ours can be found here: http://automattic.com/dmca-notice/). We make this form easy to find and easier to complete. If a copyright holder completes all required fields on this form and the claim of infringement is valid, we will honor the notice.

In addition to the remedies provided by statute, large copyright holders may develop their own internal systems to scan for content and send out bulk notices to infringing sites (we have seen our fair share of these bulk notices). At the same time, there are numerous outsourced, third party copyright enforcement services that handle the task of searching for copyrighted content identified by a creator, and sending compliant, automated notices for its removal. We have seen many smaller creators take advantage of these services to enforce their copyrights on the web.

A remedy that's not contemplated by 512 - for good reason - is the concept of "takedown/staydown", which some have recently advocated. This concept holds that once a copyright holder provides notice of an infringing file to a internet service provider (like Automattic), the service provider must remove that file….and also implement technical measures to prevent all future uploads of that same file.

While this remedy would certainly prevent the upload of some copyrighted files, it would also have a devastating chilling effect on free speech, by preventing many many uploads of the file that would be permitted by copyright law: such as uses of a file that fall under the doctrine of fair use. This is to say nothing of the technological challenges such a requirement would impose on web service providers, especially smaller providers.

By the same token, no distinction is made under the DMCA between large recipients of takedown notices (like Google) and small recipients (like Automattic). We both must expeditiously comply with the valid takedown notices, and devote appropriate resources to design a process for receiving, reviewing and processing the DMCA notices we receive in order to fulfill our obligations under the statute. The obligations are the same for large and small companies, regardless of the resources we have available to process our notices.

The work of smaller creators is the lifeblood of WordPress.com. Operating our DMCA process in a fair, efficient and transparent way is a time consuming and resource intensive task that we take very seriously. This is a especially true when one layers in the additional work we choose to take on to protect our users from invalid and abusive DMCA notices which are made all too easy by the current statutory regime.

Paul Sieminski
General Counsel
Automattic Inc. | WordPress.com
email: pes@automattic.com
skype: pesieminski
twitter: @pesieminski

BEFORE THE HOUSE COMMITTEE ON THE JUDICIARY SUBCOMMITTEE ON COURTS, INELLECTUAL PROPERTY AND THE INTERNET

HEARING ON SECTION 512 OF THE DIGITAL MILLENNIUM COPYRIGHT ACT

STATEMENT OF THE LIBRARY COPYRIGHT ALLIANCE

The Library Copyright Alliance (LCA) consists of three major library associations—the American Library Association, the Association of College and Research Libraries, and the Association of Research Libraries—that collectively represent over 100,000 libraries in the United States employing over 350,000 librarians and other personnel. In this statement, LCA explains the importance to libraries of the safe harbors provided by Section 512 of the Digital Millennium Copyright Act (DMCA).

I. Internet Access

As the subcommittee reviews the DMCA's Section 512(a) safe harbor for "mere conduits," it must bear in mind that not only large commercial entities such as Verizon and AT&T act as service providers within the meaning of Section 512(k)(1)(A). Libraries play this role as well. In the United States, we don't have Internet cafes that provide users with the hardware necessary for Internet access. While Starbucks has Wi-Fi, it doesn't supply laptops. And although increasingly more Americans at all income levels own smart phones, it is difficult (if not impossible) to fill out an online job application, or

apply for healthcare, on a smart phone. Libraries are the only source for free Internet connectivity and Internet-ready computer terminals for most Americans.

Public libraries provide the public with access to over 240,000 Internet-ready computer terminals.[1] In 2010, there were 367 million user-sessions on these computers. There were 234 computer uses per 1,000 visits to public libraries. Public libraries in rural areas had the highest ratio of Internet accessible computers: 6.1 computers per 5,000 people.

A 2013 survey by the Pew Internet and American Life Project found that 66% of those who used the Internet at a library in the past 12 months did research for school or work; 47% say they got health information; 41% say they visited government websites or got information about government services; 36% say they looked for jobs or applied for jobs online; 16% say they paid bills or did online banking and 16% say they took an online class or completed an online certification program.[2]

A study performed by the Information School of the University of Washington for the Institute of Museum and Library Services demonstrated the importance of the Internet access provided by public libraries to people below near or below the poverty line. The study found that in 2009, over 77 million people accessed the Internet from public libraries in the United States.[3] Forty-four percent of people below the poverty line used

---

[1] Institute of Museum and Library Services, *Public Libraries in the United States Survey, Fiscal Year 2010* (2013), http://www.imls.gov/assets/1/AssetManager/PLS2010.pdf.
[2] Pew Internet & American Life Project, *Library Services in the Digital Age* (2013), http://libraries.pewinternet.org/2013/01/22/Library-services/
[3] Samantha Becker, *Opportunity for All: How the American Public Benefits from Internet Access at U.S. Libraries* 2 (2010), http://www.imls.gov/pdf/OpportunityForAll.pdf.

library computers for Internet access and other services. Among young adults below the poverty line, the level of usage increased to 61%.[4]

A 2012 study on the economic benefit of Texas public libraries found that Internet access via library computer terminals saved users over $300 million in 2011.[5] The Wi-Fi provided by the Texas libraries saved users over another $20 million. 62% of the Texas library directors said that the Internet access was "extremely beneficial" to users, while a further 20% indicated that it was "quite beneficial." 56% of the directors said that Internet access was the single most important resource provided by their libraries. The users' online activities included: performing homework for classes from grade school to college; taking continuing education courses; training and testing for job certifications and licenses; looking, and applying for, jobs; applying for unemployment benefits and social assistance; applying for disaster aid as well as finding family during and after natural disasters; working short –term, paid online jobs; developing and operating businesses by placing and receiving orders; researching price comparisons; market new products; using online banking; and filing taxes. Numerous library directors indicated that some users were running small businesses entirely via Internet at their library.

The Texas directors noted that even users with home Internet access use the library Internet access because of its greater bandwidth and faster service. Additionally, not all users have the option of Internet access at their residence. "Ranchers and others in rural area in particular have difficulty obtaining reliable and reasonably priced Internet at their residences." Further, numerous directors reported that users with laptops accessed

---

[4] *Id.* at 5-8.
[5] Bureau of Business Research, IC2 Institute, University of Texas at Austin, *Texas Public Libraries: Economic Benefits and Return on Investment*, 2012, at 39-42.

their libraries' wireless service after normal hours; they cited examples of users parking near the library when the library was closed to access an Internet connection.

Lack of connection is more than a rural issue. A study of the public libraries in New York City found that 2.9 million residents don't have broadband access at home.[6] Thus, between 2002 and 2011, the libraries have increased their total number of public access computers by 89%. Between 2007 and 2011, the number of computer session logged at public computers in the city's libraries grew by 62%, from 5.8 million sessions in 2007 to over 9.3 million sessions in 2011.

Community college libraries also provide Internet access to underserved populations. Nearly 31% of students at two-year colleges do not own desktop computers or full size laptops, and thus often rely upon their college libraries for Internet access and other information technology needs.[7]

The Section 512(a) safe harbor for "mere conduits" has enabled libraries to provide Internet access without the specter of liability for onerous copyright damages because of infringing user activity. Any alteration of the DMCA's framework, either directly by amendment of 17 U.S.C. § 512(a) or indirectly by imposition of new obligations on Internet access providers, could have an adverse effect on the ability of libraries of all types to deliver a critical service to underserved and other user communities.[8]

---

[6] Center for the Urban Future, *Branches of Opportunity,* 2013, at 6.
[7] EDUCAUSE, *Core Data Service Fiscal Year 2009 Summary Report* 34 (2009) http://net.educause.edu/apps/coredata/reports/2009/.
[8] At many colleges and universities, the libraries participate in the administration of campus-wide Internet access services. Under the Higher Education Opportunity Act, educational institutions have significantly more obligations to address copyright

II. Information Location Tools

Libraries also rely on the Section 512(d) safe harbor for information location tools. Librarians prepare directories that provide users with hyperlinks to websites the librarians conclude in their professional judgment to contain useful information. Section 512(d) shelters a library from liability if the website linked to, unbeknownst to the library, contains infringing material.

One amendment would make this safe harbor even more useful to libraries. Currently, this safe harbor appears to be available only if the library, in compliance with Section 512(c)(2), identifies on its website an agent to receive notifications of claimed infringement, and provides the Copyright Office with the agent's contact information. While the identification of the agent on the library's website makes sense, the requirement of providing the Copyright Office with the agent's contact information is a completely unnecessary bureaucratic burden. The Copyright Office's directory of agents serves no purpose. If the rights holder wants to notify the library's agent about infringing activity, the agent's contact information can be found directly on the library's website. There would be no reason for the rights holder to consult the Copyright Office's directory of agents. This requirement's only accomplishment is making it more difficult for website operators to qualify for the Section 512(c) and (d) safe harbors. Accordingly, it should be repealed.

III. First Amendment Concerns

Although the DMCA safe harbors have been extremely helpful to libraries in fulfilling their mission of providing their users with access to information, in some cases

---

infringement by subscribers than do commercial Internet service providers. *See* http://www.educause.edu/library/higher-education-opportunity-act-heoa.

rights holders have abused the notice-and-takedown framework to target critical speech or restrict the fair use right.[9] We understand that other entities will provide the Subcommittee with a more detailed discussion of these abuses and possible solutions. We share these concerns about these abuses.

Moreover, some rights holders provide libraries with incomplete takedown notices, and then do not respond to requests for additional information. At that point, the library must make the difficult decision of whether the notice "fails to substantially comply" with the provisions of section 512(c)(3)(A) so that the library would remain within the safe harbor without taking further action. In other words, some rights holders are not doing their part within the safe harbor framework, and this imposes additional burdens on libraries.

Additionally, the safe harbors can incentivize service providers to "over-comply" with the law. A service provider can retain its safe harbor only if it has adopted and implemented a policy for the termination of the accounts of repeat infringers. Section 512(i)(1)(A). To ensure that they comply with this repeat infringer requirement, some companies that provide Internet access to libraries that serve thousands of users have threatened to terminate service to the library because one user allegedly engaged in infringing activity. In essence, these companies have adopted a "one strike and you're out" policy: a result we believe Congress did not intend.

At the same time, we believe that the DMCA safe harbors overall have had a very positive impact on free speech by enabling the emergence of the Internet as "a unique and wholly new medium of worldwide human communication." *Reno v. American Civil*

[9] See, e.g., http://www.chillingeffects.org/dmca512/.

Liberties Union, 521 U.S. 844, 850 (1997). In that decision, Justice Stevens observed that "it is no exaggeration to conclude that the content on the Internet is as diverse as human thought." *Id.* at 852. From the user's perspective, the Web is comparable "to both a vast library including millions of readily available and indexed publications and a sprawling mall offering goods and services." *Id.* at 853. From the publishers' point of view, the Web "constitutes a vast platform from which to address and hear from a worldwide audience of millions of readers, viewers, researchers, and buyers. Any person or organization with a computer connected to the Internet can 'publish' information." *Id.* The DMCA safe harbors have encouraged commercial enterprises and nonprofit institutions such as libraries and universities to invest in the infrastructure and platforms that facilitates this "worldwide human communication" by placing reasonable limits on their liability for the infringing acts of their users.

March 2014

March 10, 2014

Rep. Howard Coble, Chairman
Rep. Jerry Nadler, Ranking Member
United States House of Representatives
Judiciary Subcommittee on Courts, Intellectual Property and the Internet
2138 Rayburn House Office Building
Washington, DC 20515

Dear Chairman Coble and Representative Nadler:

The Directors Guild of America (DGA) respectfully submits this statement in connection with the March 13 Subcommittee hearing on Section 512 of Title 17. DGA represents over 15,000 directors and members of the directing team who create the feature films, television programs, commercials, documentaries, news and other motion pictures that are this country's greatest cultural export. DGA's mission is to protect the creative and economic rights of its members.

Congress has long recognized that small businesses are the economic engines of America. Similarly, smaller and independent directors are important economic engines of the motion picture business. These entrepreneurs are involved with all aspects of their film, from the writing to the financing, from the directing to the marketing, and they take great risks to share their creative visions with billions of people around the world on screens both large and small. They serve as the incubators of the motion picture business, opening doors to the motion picture business for new talent and craftspeople of all kinds. In short, they help make our industry the strong economic and creative force it is today. And yet, because these artists are small and economically limited, their voices are often forgotten in public policy debates.

When Directors who are copyright owners are confronted with the online theft of their work, the burden falls on them to enforce their rights. These creators cannot afford to ignore online theft. To get even a small film made, independent film makers must obtain advance financing that is available only if funders believe they can re-coup their investment. Financiers

reasonably consider online theft a significant threat to that recoupment, and independent rights holders must show they are ready and willing to protect their work.

To enforce their copyrights in the face of online theft, directors who produce their films must utilize the "notice and takedown" procedures in Section 512 of Title 17. Unfortunately, by virtue of their independent status, our members consistently find the "notice and takedown" procedure to be cumbersome, costly, and particularly for rights holders with limited resources, largely unworkable and ineffective.

We believe there is a social and economic benefit to protecting the interests of these talented independent directors by improving the procedures set forth in Section 512. DGA submits this testimony on behalf of these individuals, our members, whose vision and creativity we seek to enhance and maintain, and whose economic viability must be protected from the social and economic harm of digital theft. We believe their situation in today's public policy debate on Section 512 of Title 17 is a unique one.

I. The DMCA Notice and Takedown System is Inadequate for Small Rights Holders

The Digital Millennium Copyright Act (DMCA) was enacted over 15 years ago. Section 512 of Title 17, as created by that Act, provides service providers, as defined in the statute, with a limited safe harbor from liability for copyright infringement if their activities satisfy specific conditions, including adherence to a codified notice and takedown procedure. These rules apply to various types of service providers. Initially, the statute clearly protected traditional internet services providers (ISPs), such as large telecommunications companies that provide the "on ramps" to the Internet or transmit and cache Internet data. It also protected search engines and some service providers engaged in data storage for their users. Over time, the types of service providers protected by the safe harbor have expanded. Courts have now interpreted Section 512 to encompass companies that are solely in the business of aggregating, distributing, and performing copyrighted works on and through their systems.[1]

The breadth of Internet businesses now protected by the Section 512 safe harbor, combined with the onerous requirements and impractical realities of the "notice and takedown" process, make it extremely difficult, if not impossible, for directors who are copyright holders to protect their creative works online. The safe harbor now covers so many online entities that tracing where a motion picture is being illegally streamed or offered is a herculean task. Even discovering the theft or illegal distribution of a work requires enormous resources in terms of

[1] *Viacom International Inc. v. YouTube, Inc.* provides but one example. Despite the fact that YouTube operates primarily as a commercial video streaming service rather than a storage service, the District Court in that case found that YouTube qualifies as a service provider under Section 512(c).

staff, technological know-how, and finances. While large copyright holders often employ large anti-piracy staffs, purchase equipment, and contract with outside vendors to monitor online infringement, most independent rights holders do not have the time, knowledge, and resources to match those efforts. The end result is that small and independent copyright holders, like the directors we represent, generally do not discover the theft of their work until long after it has been widely distributed throughout the Internet. By that time, the harm is already done.

The challenges for independent directors and rights holders become even more daunting after discovery of an online theft. While some large studios and producers have made at least limited progress in utilizing the "notice and takedown" mechanism, small rights holders simply lack the resources and financial ability to navigate the complex system required to identify, notify, and pursue service providers that are exploiting their copyrighted works.

To utilize the DMCA notice and takedown mechanism, a rights holder must first prepare notices in exact accordance with the complicated legal requirements of Section 512. Sending these notices to a designated agent of the service provider requires a level of legal expertise that larger rights holders may possess but which smaller creators do not have at their disposal.

The experience of DGA director member Rick Pamplin is instructive. Rick is the sole creator and copyright owner of the feature film *Mike Winslow Live*. In 2013, he discovered, along with his distributor Nemours Marketing, Inc., that his film was being offered for free on YouTube. At the same time, the film was legally for sale on DVD and via several Video-on-Demand platforms. Sales through both of those legal outlets generated revenue for the Pamplin Film Company.

Rick soon learned that there had been over earn estimated $300,000 in lost revenue. Rick and his distributor commenced the DMCA notice and takedown process. However, with each different notice sent, they received replies seeking more information. Perhaps if they had the legal resources their request would have followed the DMCA requirements to the letter, but like most small businesses, they did not—what they did have was their determination to stop the unauthorized postings of Rick's film. To quote Rick: "The bottom line is my film is very popular so YouTube is making money, but the filmmakers, investors, and the distributor are not."

Unfortunately, Rick's situation is not unique, and even a successful "notice and takedown" is only a partial victory. This is because Section 512 imposes no obligation on the service provider to prevent further infringements of the same copyrighted work. That was the experience of DGA Director Member Penelope Spheeris, who owns the copyright to her independent documentaries *The Decline of Western Civilization*.

Penelope's classic project was shot in the early 1980s and late 1990s, and over the years her documentaries have gained a cult status. In recent years, she has found her work all over the

Internet, streaming on sites like YouTube and with pirated copies on sites like eBay. Witnessing the proliferation of illegal copies of her work, Penelope decided to create a very small, self-funded, in-house operation to monitor their use. She began identifying so many infringing copies of her work that her assistant would often send out multiple cease and desist notices in a single day. Some sites would respond and immediately remove infringing content. But other sites, often larger and well-established sites with the resources to delay, were slow to comply and respond. Some sites even used threats to keep her from pursuing them. Penelope's conclusion, though she has maintained her in-house effort, is that for an independent rights holder, trying to employ the notice and takedown procedure to stop infringement "is like putting out a forest fire with your bare feet." And even though they have been notified of the fire raging on their services, the Internet businesses profiting from that fire have no obligation to put it out.

II. The DMCA Notice and Takedown System In Today's High-Speed Digital Environment

When the DMCA was enacted in 1998, today's digital world of downloading and streaming full-length audiovisual content over the Internet was envisioned by very few. Understandably, the notice and takedown procedures and statutory protections put in place at that time are neither reflective of the high-speed digital environment of today nor responsive to the needs and interests of today's rights holders.

Service providers today also have far greater technological capabilities, including the ability to identify works through techniques such as fingerprinting or watermarking. Those technologies should be utilized not simply to take down copyrighted motion pictures upon receipt of a Section 512 notice, but to ensure that once illegal motion pictures are identified, they are kept down. It is essential that such protection be offered to all rights holders equally, and that service providers be given an incentive to provide effective protections and tools to independent directors who are copyright holders. We hope an updated Section 512 will do just that.

III. Conclusion

The Directors Guild of America thanks the House Judiciary Committee for commencing this and other hearings in its ongoing review of U.S. Copyright Law. We appreciate the opportunity to add the voice and interests of the independent director and rights holder to this review.

We believe strongly that there are economic and cultural policy reasons to protect small and independent rights holders from digital theft. We are well aware that with the digital age comes a sea change of issues that impact the motion picture business. Our members have already shown themselves to be more than up for that challenge. And as the various stakeholders continue working together to engage and solve new challenges, the DGA and its members should

be at the table to share their concerns and experience as the economic engine underlying the motion picture industry. We believe this Committee, as this hearing underscores, has begun that effort and we welcome the role it will play. We look forward to working with you.

Sincerely,

Kathy Garmezy

Kathy Garmezy
Associate Executive Director, Government and International Affairs
Directors Guild of America
7920 Sunset Boulevard
Los Angeles, CA 90046

cc: Members, House Judiciary Subcommittee on Courts, Intellectual Property and the Internet

Statement for the Record of
Cary Sherman
Chairman and CEO, Recording Industry Association of America
on "Section 512 of Title 17"
March 13, 2014

Chairman Coble, Ranking Member Nadler, Chairman Goodlatte, Ranking Member Conyers, and members of the Subcommittee, my name is Cary Sherman and I serve as the Chairman and CEO of the Recording Industry Association of America. The RIAA is the trade organization that supports and promotes the creative and financial vitality of the major music companies. Its members are the music labels that comprise the most vibrant record industry in the world. I greatly appreciate the opportunity to submit this written statement for the hearing record about the DMCA notice and takedown system.

To address whether the DMCA is working effectively in the current Internet environment, it is necessary to first understand the state of online piracy today. Let me provide a very brief overview:

There used to be a time, when the DMCA was first passed, when infringing copies of our music were mostly limited to specific online sites – File Transfer Protocol (FTP) sites, Internet Relay Chat (IRC) forums, etc. This was the heyday of AOL, Compuserv, and Netscape – before Napster and the peer-to-peer (P2P) revolution, before locker services, before Google was a household word. In Internet terms, it was the Stone Age.

That time is long gone. First came Napster, which provided instant access to music on the home computers of everyone on that P2P network. This made the takedown provisions of the DMCA largely obsolete just a year after enactment of the legislation, because the content was no longer hosted on commercial hosting services, as the legislation anticipated, but on the personal computers of end-users. And even though the original Napster was ultimately shut down by the courts as an illegal service, it spawned a huge number of copycat services, many of which persist to this day.

The second major development was the emergence of locker services focused on storing illegal content, so that an unlimited number of users anywhere in the world could download it at will. Megaupload is a prime example of such a service; that company actually paid uploaders if the content they put on Megaupload's servers was so popular that it was downloaded frequently. Megaupload made enormous profits from this scam until it was indicted by the U.S. Department of Justice for massive copyright infringement. But many such locker sites still exist.

The bottom line is that, instead of static sites with relative handfuls of infringements in 1998, there are now billions of infringing copies of our music on sites and servers and individuals' computers spread all around the world. In China, Ukraine, Holland, Sweden, Peru, and Canada, to name just a few. They are anywhere and everywhere.

And it doesn't matter where the illegal copies happen to be stored, because a new generation of pirate sites and services has emerged to provide links directly to these illegal copies. Pirate link sites like mp3skull provide instantaneous access to innumerable copies of recordings for download. Other pirate sites instantaneously upload the sound recordings to multiple sites, check the links to see if they are still live, and regenerate new links to the same content if the links are taken down. Still others make illegal copies of the audio contained in a video stream, and illegally distribute the audio.[1] And of course, there are mobile app versions of these types of piratical activity as well.[2]

These pirates do this not as a public service, but because they make money from it.[3] They sell advertising on their sites, and rake in huge profits from their illicit activity.[4] Unlike legitimate companies, these sites have no interest in actually removing infringing files or links; their incentive is exactly the opposite – to ensure that users can access as much illegal content as possible, so that advertising revenues can continue to flow.

Thus, the pirate sites ensure that their files or links are never actually taken down, or that the link taken down is just one of multiple links to the same content, or that the link taken down is promptly and automatically repopulated on the site with a slightly different universal resource locator (URL). The Pirate Bay website, for example, simply ignores takedown notices (U.S. courts do not have jurisdiction to enforce the DMCA on sites located outside of our country – and the overwhelming majority are not located in the U.S.); mp3skull, we believe, immediately repopulates, with modest changes in the address, all of its links that are contained within our takedown notices

The important takeaway is that these sites are not responsible entities who, when given notice of infringement, actually try to do something about it. These pirate sites have an economic interest in ensuring that access to pirate copies remains uninterrupted, and they use technology to make that happen, regardless of how many takedown notices they get. The

---

[1] For example, we have sent over 300 notices for the sound recording Roar by Katy Perry to both Google and Mp3skull.com, and yet that sound recording is still available on mp3skull.com, and still found easily via Google.

[2] For example, we have sent over 2,000,000 notices to Google re: infringements on the site mp3skull.com and noticed several apps that claim or suggest some association with mp3skull.com. Nonetheless, when checked on March 10, 2014, there were at least 10 apps available on play.google.com that appeared to claim or suggest some connection to mp3skull.com.

[3] See e.g., Digital Citizens Alliance, "Good Money Gone Bad: Digital Thieves and the Hijacking of the Online Ad Business; A Report on the profitability of Ad-Supported Content Theft", February 19, 2014, available at https://media.gractions.com/314A5A5A9ABBB8C5E3BD824CF47C46EF4B9D3A76/4af7cb7f-03e7-49cb-aeb8-ad0671a4e1c7.pdf. ("The web sites MediaLink examined accounted for an estimated $227 million in annual ad revenue, which is a huge figure, but nowhere close to the harm done to the creative economy and creative workers. The 30 largest sites studied that are supported only by ads average $4.4 million annually, with the largest BitTorrent portal sites topping $6 million. Even small sites can make more than $100,000 a year from advertising.) See also Jelveh, Zuben et al., "Profiting from Filesharing Services: A measurement Study of Economic Incentives in Cyberlockers", P2P '12 IEEE Sept., 2012, available at http://cis.poly.edu/~ross/papers/Cyberlockers.pdf.

[4] Id.

underlying assumption of the DMCA takedown process – that responsible entities will do the right thing and remove infringing files and do not control nor profit from the infringing activity – is simply not accurate with respect to these pirate sites.

There are thousands of these sites, each offering thousands, if not millions, of illegal copies of our music. We harbor no illusion that these sites will stop their infringing activity just because we send them a takedown notice. So we must instead look to those service providers who do represent the responsible parties envisioned by the DMCA and who provide visibility and viability to these bad online actors – namely, search engines.

Users who want to find pirate sites, or specific music they want to download, may go directly to a pirate site if they know the web address, but many simply use traditional search engines to do so, like Google, Bing and Yahoo!. These search engines comprehensively index sites like mp3skull, conveniently listing every copy of every music file in response to search requests. Indeed, depending upon the source, Google is the source of anywhere from 30% to nearly 60% of the traffic to mp3skull.[5]

Because search has become such a significant factor in leading users to online piracy, and making money from doing so, we began a program of sending notices to Google in 2012, asking for the takedown of links to infringing music files. Since then, we and our sister organization in the U.K., BPI, have together sent Google notices requesting the takedown of 100 million URLs. And, to its credit, Google has taken down virtually every link we have identified, usually within hours. But Google places a numerical limit on the number of search queries we can make to find the infringing content and, as a result, we can only take down a tiny fraction of the number of infringing files on each pirate site, let alone on the Internet generally. A recent Hill flyer by Google claims that they "receive notices for far less than 1% of everything hosted and indexed by Google." Well, that's largely because their search query limitations provide us with a bucket to address an ever-replenishing ocean of infringement. Only Google can see a whole site it indexes. Only Google has the tool to allow us to see the whole site as well, and to easily transmit notices to them for a quick takedown of infringing files to prevent damage. But Google places limitations on the tools we can use and limits us to delivering notices for a relatively minor number of infringing files on a site compared with the total number of potential infringing files. It then states that since the number of notices it receives is small related to the total number of files, there isn't much of a problem. You can imagine the frustration. Google has no duty under the DMCA to monitor sites for infringing files. We have that responsibility. But they don't allow us the tools to bear that duty, either.

Moreover, each specific URL containing or linking to a copy of an infringing recording has to be separately identified for takedown. That's because all service providers take the position that

---

[5] See http://www.similarweb.com/website/mp3skull.com, last checked March 10, 2014, indicating that 64.89% of total Mp3skull.com traffic in the last 3 months came from search, and of that 89.33% came from Google (indicating 58% came from Google). See also http://www.alexa.com/siteinfo/mp3skull.com, Last checked March 10, 2014. Per Alexa, Google search properties accounted for at least 30% of the traffic to mp3skull.com (google.com – 16.7%, google.co.in – 9.3%, google.com.pk – 2.8%, google.com.eg – 1% and google.com.bd – 1%).

they only need to take down the specific URL or copy identified, rather than all copies of the same unlicensed recording even though it may be exactly the same recording at an altered location on the same site.

Finally, regardless of what Google takes down today, its search engine will spider the same pirate sites tomorrow and index anew all the illegal content on the pirate sites. All those links to infringing music files that were automatically repopulated by each pirate site after today's takedown will be re-indexed and appear in search results tomorrow. Every day we have to send new notices to take down the very same links to illegal content we took down the day before. It's like "Groundhog Day" for takedowns.

And it's worth remembering that these are the problems we have, as an organization with some resources. The DMCA has oddly – and unintentionally – become an industry unto itself, requiring us (and many other companies and organizations) to employ entire teams of people solely dedicated to engaging in notice and takedown. Imagine the difficulty – the impossibility – for individual creators as one-person operations to track down and respond to the millions of repopulating infringements. The basis of copyright, as established in the Constitution, is to incentivize creators. The notice and takedown provisions of the DMCA were intended to further this cause in the digital world by providing a practical alternative to protracted and expensive litigation, establishing a fair and expedited system for copyright owners to protect their works online without improperly disrupting the operations of responsible service providers or unfairly implicating users of those services. Instead, the ineffectiveness (and gaming) of the system today hinders – and, in the case of individuals, supplants – the productivity of creators – the exact opposite of what the law intended.[6]

Is it any wonder that the process envisioned by the DMCA is not working? When you think about it, how could it? Sites with a vested interest in keeping infringing files up, not taking them down, have developed work-arounds to notice and takedown to maintain an abundant inventory of popular songs available and in some cases, incentivize uploaders to further exploit creators. These sites and services further claim DMCA protection while not complying with its conditions. Then search engines compound the problem by continually indexing and highlighting these pirate sites in searches for music acquisition. Other intermediaries exacerbate this issue by providing services to such sites to help them profit from their illegal activities, and in some cases, providing road blocks to their identification. And as we noted, the problem has moved to mobile, with thousands of apps published that are dedicated to infringing activity. It imposes huge resource burdens on everyone without making much of a dent in the problem.

So what should be done?

---

[6] See, e.g., Boyden, Bruce, "The Failure of the DMCA Notice and Takedown System: A Twentieth Century Solution to a Twenty-First Century Problem", Center for the Protection of Intellectual Property, George Mason University School of Law, December 5, 2013. Available at http://cpip.gmu.edu/wp-content/uploads/2013/08/Bruce-Boyden-The-Failure-of-the-DMCA-Notice-and-Takedown-System1.pdf.

First, we understand that we need to do our part. That's why the major record companies we represent have partnered with Google Play and dozens of other technology companies to offer fans millions of digital songs in almost every conceivable model. In fact, the legitimate digital marketplace has become so vibrant and competitive that we felt the need to develop a one-stop website – whymusicmatters.com – to help consumers understand and navigate the full range of legal service options. In fact, in the U.S. today, there are hundreds of sites and digital services available for fans to listen and/or download the music they love.

We also seek and take action directly against these pirate sites and services when we can.[7] Self-help is a good policy when it is available. But these bad actors reside mostly outside the jurisdiction of U.S. courts, placing them safely out of our – or even the government's – reach. And that is why we look to our responsible online partners to engage in addressing this problem. But to paraphrase Benjamin Franklin, we should never confuse motion with action. Saying you're taking action or doing the least bit necessary to show motion is not the same as taking effective steps and having meaningful results to show for it.

We remain champions of voluntary initiatives and agree with the Department of Commerce's recommendation that relevant parties should develop and implement voluntary best practices to address the problems with the notice and takedown system. Voluntary initiatives are more flexible, and less threatening, than legislation, and are therefore more achievable. In fact, to date, we have implemented successful initiatives with payment processors, ISPs, and advertising intermediaries. The logical next partner is search engines.

There can be no doubt that search engines play a considerable role in leading users to illicit services and can play a key role in addressing infringing activity online. We hope they will join with the growing list of intermediary partners who have sat down with stakeholders and worked collaboratively to find solutions to the problems outlined above.

We have some thoughts on voluntary steps that can be taken that will make a real difference, that we hope will be discussed by the Members of this Committee and by the Department of Commerce in its roundtables:

1. **Let us monitor effectively**. Provide tools to allow us to search in a manner commensurate with the size of the problem, and then allow the number of takedown notices we submit to reflect ALL the infringing files on a site, rather than a tiny fraction of them;
2. **Help end "whack-a-mole."** Ensure that when links to content are taken down, the same content on the same site is not continuously re-indexed when repopulated by the pirate site, rendering the takedown process useless;
3. **Push down pirate sites in search results.** Demote pirate sites in search rankings, using objective criteria such as the number of legitimate takedown notices submitted about the site;

[7] We believe we use better than "good faith" efforts to identify infringing activity. While no system is bullet proof, we perform significant due diligence and take great care to avoid sending "false positive" DMCA notices.

4. **Help the consumer know what's legitimate.** Promote authorized sites and services to consumers in search rankings, through a "badge" or some other consumer-friendly information;
5. **Stop "finishing the sentence" to lead to a pirate site.** Modify the "autocomplete" function so it does not lead users to sites or apps based on the number of legitimate takedown notices submitted about the site;
6. **Don't give pirate sites a continuous "do-over."** Develop a common sense approach to implementing a repeat infringer policy.

We look forward to constructive and productive dialogue to remedy the DMCA's shortcomings.

Thank you for the opportunity to submit these comments.

Association of American Publishers, Inc.
www.publishers.org

455 Massachusetts Ave., NW Suite 700
Washington, D.C. 20001
Telephone: (202) 347-3375
Fax: (202) 347-3690

Association of American Publishers[1]
Statement Submitted for the Hearing Record
House Judiciary Committee
Subcommittee on Courts, Intellectual Property, and the Internet
March 28, 2014

Hearing on "Section 512 of Title 17"
March 13, 2014

Introduction

On behalf of its members, the Association of American Publishers ("AAP") appreciates this opportunity to place its views in the hearing record of the House Judiciary Subcommittee on Courts, Intellectual Property, and the Internet ("IP Subcommittee") regarding the current ineffectiveness[2] of the "notice-and-takedown system" which, in conjunction with a carefully-crafted set of liability "safe harbors," was established in Section 512 of the Digital Millennium Copyright Act ("DMCA") more than fifteen years ago in Congress's initial creative and hopeful attempt to address the problem of online copyright infringement by incentivizing a collaborative response from copyright owners and Internet service providers ("ISPs").

In particular, AAP submits this post-hearing statement to support and elaborate upon the oral and written testimony presented at the IP Subcommittee's March 13 hearing by Paul Doda, Global Litigation Counsel for Elsevier Inc., regarding the specific nature of the problems that

[1] The Association of American Publishers (AAP) represents over 400 publishers, ranging from major commercial book and journal publishers to small non-profit, university, and scholarly presses.
[2] AAP intends to confine this statement to the issue discussed at the IP Subcommittee's Section 512 hearing. Please note, however, that AAP has provided detailed suggestions for how to improve the efficiency and effectiveness of the daily operation of the notice-and-takedown process within the current terms of Section 512 as part of an ongoing inquiry by the Department of Commerce in follow up to its release of its Green Paper in 2013. *See* Department of Commerce, Request for Comment on Green Paper, Copyright Policy, Creativity, and Innovation in the Internet Economy, 78 Fed. Reg. 61,337 (Oct. 3, 2013) http://www.gpo.gov/fdsys/pkg/FR-2013-10-03/pdf/2013-24309.pdf (Comments of the Association of American Publishers, *submitted* (Nov. 13, 2013).

have made the integrated system of the notice-and-takedown process and eligibility for "safe harbor" protection against copyright infringement liability incapable of achieving its intended purpose, and some concrete suggestions for how to improve the workings of that system in a continually-evolving online environment.

In noting our specific concerns and our recommendations for addressing them, AAP recognizes that voluntary "best practices" and agreements among the key stakeholders in the online ecosystem are likely to be the most practical, effective and achievable ways to improve the daily operation of the notice-and-takedown system insofar as such measures can adapt to the rapid pace of technological and entrepreneurial change on the Internet more adroitly than can federal legislative, judicial and regulatory processes. However, this submission will also touch upon Section 512-related enforcement problems which, based upon current legal, market and technological realities, will likely require federal government intervention to make these crucial elements of the overall U.S. copyright enforcement system truly *effective* in the modern online environment.

Current Ineffectiveness of Notice-and-Takedown

As was noted by several members of the IP Subcommittee and each of the hearing witnesses, successful partnerships between copyright owners and technology platforms have led today's consumers to expect and often achieve instant online access to high-quality, copyrighted content anytime and anywhere.

All types of publishers represented within AAP's membership -- across the trade, academic, and scientific, professional and technical sectors -- are investing and innovating to meet this demand through the production, distribution and making available of eBooks, online journals, audio-books, integrated digital learning solutions, and other new forms of works, along with new business models that take advantage of the ubiquity of the Internet to serve local, national and global markets.[3]

But with increasing digital adoptions and adaptations by publishers, online piracy of their works likewise continues apace, and the costly and frustrating notice-and-takedown experiences of Elsevier, as detailed by Mr. Doda in his hearing testimony,[4] have become all too common among AAP member publishers of all types, whether large or small, for-profit or non-profit,

[3] *See The Rise of Innovative Business Models: Content Delivery Methods in the Digital Age: Hearing Before the Subcomm. on Courts, Intellectual Property, and the Internet of the H. Comm. on the Judiciary*, 113th Cong. (2013) (Post-hearing Statement of the Association of American Publishers available at http://www.publishers.org/_attachments/docs/publicstatements/aapstatement-riscofinnovativebusinessmodels.pdf.
[4] *Section 512 of Title 17: Hearing Before the Subcomm. on Courts, Intellectual Property, and the Internet of the H. Comm. on the Judiciary*, 113th Cong. (2014) (Testimony of Paul F. Doda providing a number of illustrative examples of this "whack-a-mole" problem at 2-4).

established or start-up. Despite sending millions of takedown notices annually[5] to remove infringing copies, or links to such copies, of their published works, AAP member publishers find themselves competing against a plethora of different sites on the Internet that persist in offering or enabling individuals to find and download illegitimate copies of virtually any popular copyrighted work they want at any time because, as the IP Subcommittee heard at the hearing, the notice-and-takedown process has become an efficient but highly *ineffective* "whack-a-mole"[6] game.[7]

One challenge copyright owners face is that many kinds of websites and services that were never anticipated during the original legislative negotiation and crafting of the key elements of Section 512 now enjoy the DMCA's "safe harbor" protections from infringement liability, despite having significantly different postures toward the uploading of infringing copies of copyrighted works to their systems than was evident with the original "service providers" for whom these protections were intended and designed. Although these new websites and services fall within the broad terms of Section 512's second and far broader definition of "service provider,"[8] they have developed lucrative new business models that are structured with features and operational behavior that attract unauthorized user uploads of copyrighted works[9] in order to

---

[5] *See Transparency Report*, GOOGLE http://www.google.com/transparencyreport/removals/copyright/ (last visited Mar. 28, 2014) (showing that Google alone receives approximately 30 million DMCA notices per month).

[6] The "whack-a-mole" problem describes the situation where links to infringements of copyrighted works are taken down subject to a valid takedown request only to reappear, sometimes through the exact same URL, shortly thereafter, requiring an endless cycle of takedown requests to provide even the slightest amount of protection for creative works.

[7] While AAP commends Google for simplifying the notice sending process on its sites, creating a "trusted submitter" program for handling high volumes of automated notices from frequent submitters, and for processing notices in an average of less than 6 hours, the fact that in 2013 Google received "takedown notices for more items *every week* than [it] received in all of 2010" indicates that while sending and processing notices may have become quite *efficient* with respect to the de-listing of links by Google, the current implementation of the notice-and-takedown process is not an *effective* tool to reduce copyright infringement online.

[8] *See* 17 U.S.C. §512(k)(1)(B) (broadly defining "service provider" as "a provider of online services or network access, or the operator of facilities therefor." This definition also "includes an entity described in subparagraph (A)," which is a reference to service providers that engage in "transitory digital network communications."). *See Capitol Records, LLC v. Vimeo, LLC*, No. 09 Civ. 10101(RA), slip op. at 12 (S.D.N.Y. Sept. 18, 2013) (explaining that "[t]his definition 'is clearly meant to cover more than mere electronic storage lockers.' Rather, it is 'intended to encompass a broad set of Internet entities.' Indeed, one court commented that the DMCA defines 'service provider . . . so broadly that [it had] trouble imagining the existence of an online service that *would not* fall under the definitions.'") (internal citation omitted, emphasis in the original).

[9] Features and operational behaviors that attract unauthorized user uploads can include: providing users access to automated tools to monitor whether the content the user uploaded has been removed or disabled; without verifying permission to distribute the uploaded content, providing technologies that proliferate publicly-accessible links to content across multiple link sites; and providing payments or rewards for uploading content or links to content that is popular (likely commercially produced copyrighted material). To be clear, these are illustrative examples of the types of features and behaviors that AAP member publishers often encounter with regard to sites that persistently infringe their copyrights. However, AAP and its members recognize that there are legitimate contexts in which these features and behaviors can be found as well, such as YouTube, which helps users monetize their original content and OneLoad.com which allows *registered* users (that agree that they "will not upload any…copyrighted third-party content") to "easily deploy and track videos across top video sharing, social networking and custom sites in a single step." OneLoad, http://www.oneload.com/about/what_is (last visited Mar. 28, 2014).

drive traffic to their sites and profit from selling advertising, subscriptions, and service enhancements such as increased downloading speeds. Unfortunately, they are able to qualify for safe harbor protection and flourish to the detriment of rights holders by merely paying lip service to the other side of the DMCA's Section 512 equation, which is the protection of the rights of copyright owners. They may "expeditiously" takedown an infringing work in response to a notice from the copyright owner, while nominally implementing a "repeat infringer" policy, in order to maintain their eligibility for "safe harbor" protection against liability for such infringements; however, they do little else to prevent the same infringement, let alone others, from recurring on their sites or systems.

Under the current operation of the notice-and-takedown system, infringements thus remain too widespread, too frequent, and too persistent for any copyright owner, large or small, to locate all or even a substantial portion of such occurrences and achieve their effective removal without recurrence.

Recommendations for Effective Implementation of Section 512 Notice-and-Takedown

Develop and Implement Voluntary Standard Technical Measures

AAP agrees with the bipartisan view expressed by IP Subcommittee members Reps. Judy Chu (D-CA) and Tom Marino (R-PA) that, with respect to notice-and-takedown, "[d]oing the bare minimum is not how the law was intended to function" and "'[t]akedown' should mean 'staydown.'"[10] While a notice-and-takedown regime will continue to be useful, particularly for legitimate service providers with business models that are not structured or connected with behavior that attracts unauthorized uploads of copyrighted works, it cannot succeed in isolation to address the widespread infringement problem that the copyright community faces, especially if it requires repetitive notices from copyright owners and provides little incentive for service providers to prevent the re-uploading of the same infringing works that they have previously removed pursuant to prior notices from the same copyright owners.[11] In order to effectively address the massive and persistent infringement occurring online, service providers need to work with copyright holders to develop and accommodate the implementation of commercially reasonable and effective "standard technical measures" that do not impede the legitimate functionality of the service provider and can, at a minimum, be deployed to prevent the recurrent uploading of infringing copies of works that have been removed by the service provider pursuant to prior notices from the copyright owner.

---

[10] Rep. Judy Chu and Rep. Tom Marino, *Victims of IP Theft Need Better Protection*, THE HILL (Mar. 12, 2014) http://thehill.com/opinion/op-ed/200630-victims-of-ip-theft-need-better-protection#ixzz2wL3650hz.
[11] *See supra* note 4.

Of course, it is often loudly proclaimed that the DMCA was never intended to impose any *obligation* on service providers to help copyright owners fight online piracy of copyrighted works. Usually this assertion is based on two observations about the conditions of eligibility for safe harbor protection under Section 512: first, that taking action to remove or block access to infringing copies of copyrighted works on their sites or systems, in response to a notice from a copyright owner, is an entirely *voluntary* decision on the part of service providers, which they make depending upon whether they wish to be eligible for safe harbor protection from potential liability in connection with the posting of such copies; and, second, that Section 512(m) makes clear that nothing in Section 512 conditions safe harbor eligibility on a service provider "monitoring" its site, system or service for infringing materials or activities, or "affirmatively seeking facts indicating" the presence of such materials or activities. But the actual provisions of Section 512 and their legislative history evince a different intent of Congress.

While it is true that removing or blocking access to infringing materials or activity in response to a notice from a copyright owner *is* a voluntary decision made by the service provider in order to be eligible for safe harbor protection, the other conditions of eligibility for safe harbor protection are unquestionably mandatory. These include the requirement that a service provider "has adopted and reasonably implemented" a policy for termination ("in appropriate circumstances") of subscribers and account holders of the service provider's system or network who are "repeat infringers,"[12] and the requirement that a service provider "accommodates and does not interfere with standard technical measures" that are defined in the statute and used by copyright owners to identify or protect copyrighted works.[13]

The definition of "standard technical measures" qualified only those measures that "(A) have been developed pursuant to a broad consensus of copyright owners and services providers in an open, fair, voluntary, multi-industry standards process; (B) are available to any person on reasonable and nondiscriminatory terms; and (C) do not impose substantial costs on service providers or substantial burdens on their systems or networks."[14] Unfortunately, while a report of the House Judiciary Committee confirmed in its analysis of this provision that Congress "expected that all of the affected parties will expeditiously commence voluntary, inter-industry discussions to agree upon and implement the best technological solutions available to these goals" of protecting copyrighted works,[15] the prescribed process for bringing them into existence never occurred.

---

[12] *See infra* at 9-10 (discussing the repeat infringer requirements of 17 U.S.C. §512 (i)(1)(A)).
[13] 17 U.S.C. §512 (i)(1)(B),(i)(2). A third mandatory condition of eligibility, designating an agent to receive notifications of claimed infringements from copyright owners and providing publicly accessible contact information for such agent, applies only to the safe harbor under Section 512(c) for infringement of copyright based on a service provider's storage of information of material on its system or network at the direction of a user of such system or network. *See* 17 U.S.C. §512(c)(2).
[14] 17 U.S.C. §512(i)(2).
[15] H. Committee Print, Serial No 6, 105th Cong., 2d Sess. (September 1998) at 37.

Still, the intent of Congress that the Section 512 safe harbors from infringement liability would apply to a service provider "only if" it "accommodates and does not interfere with" such "standard technical measures" is clearly stated in that section. Moreover, despite the common insistence that Section 512(m) absolutely rejects the proposition that the applicability of the safe harbors is conditioned on a service provider "monitoring its service or affirmatively seeking facts indicating infringing activity," such references usually fail to note the complete phrasing of that provision, which ends with the words "except to the extent consistent with a standard technical measure complying with the provisions of subsection (i)." In this context, the requirement for *accommodation*, rather than merely non-interference, is evidence that Congress intended service providers to be *obligated* to work with copyright owners to combat online piracy of copyrighted works.

Although the "standard technical measures" required to activate that obligation do not yet exist, legitimate content sites, such as YouTube and Scribd, have *voluntarily* developed and implemented technical measures to prevent the appearance (and reappearance) of infringing content on their sites. These voluntarily-implemented technical measures not only offer an effective tool to decrease the prevalence of infringement on their sites, but also improve the efficiency and effectiveness of the notice-and-takedown process by ending the "whack-a-mole" game, and in turn, substantially eliminate the need for rights holders to send repeated notices for repeated processing by the service provider. Moreover, the technical measures adopted by these legitimate sites, which vary in size and content,[16] clearly establish that such measures can be tailored and implemented in ways that are both economically and technically feasible as part of a diverse array of not only sustainable, but growing, business models.[17]

---

[16]Scribd.com primarily hosts literary content, whereas, YouTube primarily hosts audio and visual copyrighted content.

[17] YouTube's implementation of Content ID illustrates that commercially reasonable upload filtering can complement the growth of legitimate content-driven websites. YouTube started experimenting with its Content ID system in 2007 and now uses the system to scan over 400 *years* of video every day. Over this same time period, YouTube has experienced exponential growth in its popularity as illustrated by the increase from receiving/processing an average of six hours of video uploads per minute in 2007, to 24 hours per minute in 2010, 72 hours per minute in 2012, and over 100 hours per minute today. *Compare, YouTube Uploads Hit 72 Hours A Minute: How Can That Ever Be Pre-Screened For 'Objectionable' Material?*, TECHDIRT (May 23, 2012) https://www.techdirt.com/articles/20120521/12065919003/youtube-uploads-hit-72-hours-minute-how-can-that-ever-be-pre-screened-objectionable-material.shtml (noting that "some governments [are calling for] Google and others [to] pre-screen user-generated material. Just how do they think anyone can do that when every second there's one or more hours of new material flooding in? The challenge is particularly acute for video, which does not lend itself to automatic screening, unlike text, say."); *How Google Fights Piracy*, GOOGLE 9-10 (Sept. 2013) https://docs.google.com/file/d/0BwxyRPFduTN2dVFqYml5UENUeUE/edit?pli=1 (describing Content ID as a win-win solution for YouTube and rights holders); *Statistics – YouTube*, http://www.youtube.com/yt/press/statistics.html (last visited Mar. 28, 2014) (giving updated statistics on how much video content is filtered by Content ID each day). Scribd.com, which implemented its upload filter in 2009 (*See* FAQs, *How Does Scribd Help Protect the Rights of Authors?*, SCRIBD (Feb. 26, 2009) http://support.scribd.com/entries/25057-How-does-Scribd-help-protect-the-rights-of-authors-) has also grown its business, launching one of the first and most comprehensive eBook subscription services in late 2013, partnering with a number of AAP member publishers. *See* Press Release, *The New Scribd*, SCRIBD (Oct. 1, 2013) http://blog.scribd.com/2013/10/01/the-new-scribd/.

With technologies that provide reasonable measures to prevent the reappearance of infringing content growing increasingly effective and affordable,[18] there is no reason not to work toward development of the standard technical measures that Congress factored into its crafting of the DMCA fifteen years ago.

Increasingly, rights holders and certain service providers have realized that the most effective way to protect copyrighted works, meet consumer demands, and facilitate the growth of legitimate user-generated content sites is through a partnership between copyright holders and service providers. Specifically, this partnership involves cataloguing hash identifiers for infringing files as well as investment in creating metadata and fingerprint files for each copyrighted work to include in databases that service providers can automatically compare against potential uploads to their sites. When an exact match to the fingerprint of a copyrighted work is identified, the service provider and the rights holder can implement a pre-negotiated response, *i.e.*, allow the upload and monetize the content or block the upload. As Google has said, its Content ID technology (which implements the partnership just described) is "not just an *anti-piracy solution*, but *also a new business model* for copyright owners and YouTube alike… [that] is *good for users* as well." When service providers accommodate this new mode of online copyright protection, everybody wins.

Currently, however, there are few incentives for service providers to voluntarily implement such measures, despite the fact that Section 512(i) of the DMCA makes clear that Congress fully expected that the content and service provider industries would develop and adopt "standard technical measures" by which copyright owners would be permitted to identify and protect copyrighted works with the cooperation of service providers.[19] AAP believes that the IP

---

[18]There are a number of companies offering technological measures to protect sites against unauthorized posting of copyrighted content, with a variety of pricing and implementation models. *See e.g.*, Audible Magic http://audiblemagic.com/solutions-compliance.php (last visited Nov. 13, 2013) (providing "turnkey compliance and filtering solutions powered by sophisticated and patented digital fingerprinting technology"); Gracenote, http://www.gracenote.com/case_studies/itunes/ (last visited Nov. 13, 2013) (being used for more than "filtering" as it underlies iTunes Match as well); Vobile, http://vobileinc.com/ (last visited Nov. 13, 2013); Sandvine https://www.sandvine.com/downloads/general/success-stories/success-story-40-successful-value-added-services-deployments.pdf (last visited Nov. 13, 2013) (explaining how its service allows broadband networks to efficiently and cost-effectively filter content).

[19] As noted above, 17 U.S.C. §512(i) entitled "Conditions for Eligibility," makes clear that to be eligible for any DMCA safe harbor, a service provider must "accommodate[] and [] not interfere with 'standard technical measures[,]'" which are "used by copyright holders to identify or protect copyrighted works and…have been *developed pursuant to a broad consensus of copyright owners and service providers in an open, fair, voluntary, multi-industry standards process*." Furthermore, Section 512(m) was originally included in the DMCA to protect the privacy of Internet users[19], and it expressly limits its "no duty to monitor" provision by referencing the standard technical measures Congress intended ISPs and content companies to develop through the multi-industry process described in 512(i). Despite this clear limitation to Section 512 (m) and Congress' intention in enacting 512(i), work to develop and implement such standard technical measures has not materialized. In fact, as Professor O'Connor's testimony argues, web companies today are dis-incentivized from taking steps they would otherwise voluntarily take to ensure that copyright infringements do not appear on their website. *See Section 512 of Title 17: Hearing Before the Subcomm. on Courts, Intellectual Property, and the Internet of the H. Comm. on the Judiciary*, 113th Cong. (2014) (Testimony of Professor Sean M. O'Connor at 2-3). This situation has been exacerbated by

Subcommittee and Congress should encourage and provide incentives for all stakeholders to engage in a public discussion about practical and effective upload filtering tools. A multi-industry body representing the various stakeholders involved in online copyright protection should be brought together under the guidance and supervision of the National Institute of Standards and Technologies ("NIST") (or another government agency with the requisite technological expertise) to identify or devise a wide range of generic technical measures that service providers could voluntarily implement to reduce infringement without materially impeding the legitimate functionality of their sites.[20]

While there have been private agreements and white papers developed in the past few years on this topic, AAP is encouraged to see that a broader and more positive public discussion of automated filtering to screen out unauthorized uploads of copyrighted works that match content previously removed in response to a valid takedown notice is now starting to happen. For example, although several years old and limited to audio and visual content, the *Principles for User Generated Content Services* ("UGC Principles") that were developed by content and service providers in 2007 demonstrate the feasibility of reaching mutually acceptable solutions for content and service providers in the online environment. The UGC Principles demonstrate a shared commitment to: (1) eliminating infringing content; (2) encouraging dissemination of "wholly original and authorized user-generated" content; (3) protecting user privacy; and (4) accommodating fair uses of copyrighted content.[21] Additionally, the *Fair Use Principles for User Generated Video Content* ("Fair Use Principles"), endorsed by the Electronic Frontier Foundation and other public interest organizations,[22] help to identify a threshold for applying automated upload filtering to clear instances of infringement.

To be clear, AAP rejects the notion that any automated system can effectuate a valid fair use analysis or that rights holders have an obligation under the DMCA or Section 107 of the

---

additional case law adopting a "volitional act" requirement in order to prove infringement, which has suggested that the operator of an automated infringement machine would not be held liable. *See, e.g., Cartoon Network, LP v. CSC Holdings, Inc.*, 536 F.3d 121 (2d Cir. 2008).

[20] In response to the Internet Policy Task Force's Green Paper inquiry, AAP has recommended the "creation of a multi-industry body [to be] led by the National Institute of Standards and Technology (NIST) to devise a wide range of generic technical measures that ISPs can implement to reduce infringement without materially harming the legitimate functionality of the sites. Different types of technical measures can be developed for different types of ISPs. High volume ISPs that upload and download all types of content would obviously need a different type of technical measure than a small ISP that posts modest numbers of links to content stored at other locations. The goal of the multi-industry process would be for NIST to provide ISPs with a menu of potential technical measures they can adopt depending on their size and functionality." *See* Department of Commerce, Request for Comment on Green Paper, Copyright Policy, Creativity, and Innovation in the Internet Economy, 78 Fed. Reg. 61,337 (Oct. 3, 2013) http://www.gpo.gov/fdsys/pkg/FR-2013-10-03/pdf/2013-24309.pdf (Comments of the Association of American Publishers, *submitted* (Nov. 13, 2013)).
http://www.ntia.doc.gov/files/ntia/association_of_american_publishers_comments.pdf .

[21] *Principles for User Generated Content Services*, http://ugcprinciples.com/index.html (last visited Mar. 28, 2014).

[22] The following groups have endorsed these Principles: Electronic Frontier Foundation; Center for Social Media, School of Communications, American University; Program on Information Justice and Intellectual Property, Washington College of Law, American University; Public Knowledge; Berkman Center for Internet and Society at Harvard Law School; and ACLU of Northern California.

Copyright Act to conduct such an analysis before sending a takedown notice.[23] However, publishers believe that Section 2(a), *i.e.*, the "Three Strikes Before Blocking" test, articulated in the Fair Use Principles, is a useful starting place for discussing how to apply automated filtering to all types of copyrighted content upon upload in a reasonable manner that provides technological safeguards against blocking fair uses.[24]

Although these existing principles each contain useful guidelines for reasonable automated upload filtering, AAP's recommendation to create a range of appropriate standard technical measures for different types of content and service providers requires a neutral third-party with technical expertise, such as NIST, to ensure that commercially reasonable and effective technical measures are created in a manner that accommodates the needs of various stakeholders (*i.e.*, a reasonable and effective technical measure for a high volume ISP that facilitates uploads and downloads of all types of content may differ from a reasonable and effective filter for a small ISP that posts modest numbers of links to content stored at other locations).

Develop and Implement Repeat Infringer Policy Best Practices

In addition to the current lack of incentives to voluntarily implement efficient upload filtering systems to decrease the prevalence of identified infringements on content hosting sites, the general failure of service providers to adequately or consistently adopt and implement an effective "repeat infringer" policy has also contributed significantly to the persistence and reappearance of copyright infringements.

The DMCA, in section 512(i)(1)(A), conditions an ISP's receipt of safe harbor protection on the adoption and reasonable implementation of a "repeat infringer" policy that provides for the "termination" of an ISP's subscribers or account holders in "appropriate circumstances."[25] Congress, however, did not define reasonable implementation or "appropriate circumstances," which has enabled ISPs to adopt varying policies without providing transparency to document the regular and reasonable implementation of such policies. Transparency is critical in evaluating the efficacy of such policies. A recent case, *Disney v. Hotfile*, illustrates just how important the reasonable implementation of a "repeat infringer" policy can be to successfully rooting out a substantial portion of the copyright infringements available online.

---

[23] AAP members believe the district court's contrary ruling in the *Lenz* case , now on appeal, is without precedent and clearly erroneous as a matter of law. *See Lenz v. Universal Music,* 2013 WL (N.D. Cal Jan. 24, 2013).

[24] *See Fair Use Principles for User Generated Video Content*, http://www.eff.org/pages/fair-use-principles-user-generated-video-content (last visited Mar. 28, 2014) (suggesting that, for filtering purposes, only matching copies where "nearly the entirety (e.g., 90% or more)" of the challenged content is comprised of a single copyrighted work should be presented or removed." AAP member publishers agree with the goal of carefully ensuring that reasonable technical measures only prevent or remove clear infringements.

[25] 17 U.S.C. §512(i)(1)(A).

Specifically, in the *Hotfile* case, there was no dispute as to the fact that "24,790 [Hotfile] users had accumulated more than three [DMCA] notices [identifying copyrighted works that such users had uploaded without rights holder permission]; half of those had more than *ten* notices; half again had *25* notices; 1,217 had *100* notices; and 61 had more than *300* notices."[26] Furthermore, the court found that, "while those who were the subject of more than three infringement notices made up *less than one percent* of all of Hotfile's users, they were responsible for posting *50 million* files…representing *44 percent of all files ever uploaded* to Hotfile" and "those same files were downloaded nearly *1.5 billion times*, representing roughly half of all downloads ever from Hotfile."[27]

These facts show that a reasonable "repeat infringer" policy that revokes user access after accumulating multiple DMCA notices is a focused measure to address "a discreet [sic] group of problematic users" that contribute a disproportionate share of online infringements.[28] AAP therefore urges that Congress's original intent should be effectuated, so that "those who repeatedly or flagrantly abuse their access to the Internet through disrespect for the intellectual property rights of others should know that there is a *realistic* threat of losing that access."[29] Clear, transparent, and effective "repeat infringer" policies are in the best interest of legitimate service providers, consumers and rights holders. AAP believes that these stakeholders can, with the encouragement of Congress, work together to develop best practices for implementing effective "repeat infringer" policies, which would, at a minimum, include:

- a baseline for what actions characterize a user as a repeat infringer;
- criteria for appropriately tracking repeated infringing activity[30], including parameters for user identification tools on sites that allow users to upload and distribute content; and
- protocols for notifying copyright owners about repeat infringer activity.[31]

Also, as these policies affect users, the best practices should require each service provider to make its specific "repeat infringer" policy publicly available in simple terms on its site.

---

[26] *Disney Enterprises, Inc. v. Hotfile Corp.*, Case No. 11-20427, slip op. at 19 (S.D. Fla Sept. 20, 2013).
[27] *Id.* at 20-21.
[28] *Id.* at 20.
[29] H.R. Rep. No. 105-551(II) at 61 (1998) (emphasis added).
[30] The service provider would need to be able to establish a connection between an infringement notice; the infringing file; and the uploader of the infringing file and also to prevent terminated users from continuing to infringe with new usernames.
[31] *See* Comments from AAP in response to U.S. Patent & Trademark Office, Notice of Inquiry - Voluntary Best Practices Study, 78 Fed. Reg. 37,210 (Jun. 20, 2013), submitted Aug. 21, 2013, http://www.uspto.gov/ip/officechiefecon/PTO-C-2013-0036.pdf (suggesting information that would be useful to provide to rights holders, including: titles, actions taken by the ISP, identity of infringers).

Promote Legitimate Content through Search Engines

As noted in AAP's statement submitted after the IP Subcommittee's hearing on "The Role of Voluntary Agreements in the U.S. Intellectual Property System," our members believe that "search engines are the main gateway through which a consumer, wittingly or unwittingly, is directed to the sources of infringing content online. However, search engines have yet to commit to meaningful discussions with content creators on how to better refine search protocols to avoid serving up infringing links or sites to consumers."[32]

To be sure, Google "believe[s]" that its efforts to incorporate the "number of valid copyright removal notices [it] receive[s] for any given site as a signal in [its] ranking algorithm" should "help users find legitimate, quality sources of content more easily" given that "sites with high numbers of removal notices *may* appear lower in search results."[33] However, as Rep. Chu's search for *12 Years A Slave* and *Frozen* during the Section 512 hearing illustrated, links to sites offering infringing content and receiving substantial numbers of takedown notices still appear in the top of Google's search results.[34] The Recording Industry Association of America has similarly found that sites making available infringing music downloads, which have received millions of takedown notices, are still showing up in the top 5 search results on Google despite its current methodologies for adjusting its algorithm.[35] Moreover, Google Search's autocomplete feature often helps users find infringing material by suggesting, after the user types the title of a commercial copyrighted work, the addition of search terms such as "free," despite the fact that the user did not include that term in their search query.[36]

---

[32] *The Role of Voluntary Agreements in the U.S. Intellectual Property System: Hearing Before the Subcomm. on Courts, Intellectual Property, and the Internet of the H. Comm. on the Judiciary*, 113th Cong. (2013) (Post-hearing statement of the Association of American Publishers available at http://www.publishers.org/_attachments/docs/publicstatements/aapstatement-roleofvoluntaryagreements.pdf).

[33] *How Google Fights Piracy*, GOOGLE 14, 18 (Sept. 2013) https://docs.google.com/file/d/0BwxyRPFduTN2dVFqYml5UENUeUE/edit?pli=1.

[34] *See Section 512 of Title 17: Hearing Before the Subcomm. on Courts, Intellectual Property, and the Internet of the H. Comm. on the Judiciary*, 113th Cong. (2014) (Statement of Rep. Judy Chu (D-CA) conducting a live search for *Twelve Years a Slave* and *Frozen* using Google Search during the hearing and noting that, in both cases, Google Search displayed sites offering to let her watch the content "online free" in the top three search results.).

[35] *See The Role of Voluntary Agreements in the U.S. Intellectual Property System: Hearing Before the Subcomm. on Courts, Intellectual Property, and the Internet of the H. Comm. on the Judiciary*, 113th Cong. (2014) (Testimony of Cary Sherman stating that "on a search conducted August 29, 2013 for mp3s or downloads of the recent top 50 billboard tracks, www.mp3skull.com, a site for which Google has received over 1.25 million copyright removal notices, showed up in the top 5 search results 42 times."); see also RIAA, "Six Months Later – A Report Card on Google's Demotion of Pirate Sites' (Feb. 21, 2013) http://76.74.24.142/3CF95E01-3836-E6CD-A470-1C2B89DE9723.pdf.

[36] *See Section 512 of Title 17: Hearing Before the Subcomm. on Courts, Intellectual Property, and the Internet of the H. Comm. on the Judiciary*, 113th Cong. (2014) (Statement of Rep. Judy Chu (D-CA) conducting a live search for *Frozen* using Google Search during the hearing and clarifying for the record that although she did not include the term "free" in her query, Google autocomplete suggested the term and Google Search displayed a site offering to let her "watch Frozen online free" as the top search result.).

Before the

United States House of Representatives Committee on the Judiciary
Subcommittee on Courts, Intellectual Property, and the Internet

Regarding

"Section 512 of Title 17"

March 13, 2014

Statement of the
Computer & Communications Industry Association

The Computer & Communications Industry Association (CCIA) represents large, medium-sized, and small companies in the high technology products and services sectors, including computer hardware and software, electronic commerce, telecommunications and Internet products and services. CCIA companies collectively generate more than $250 billion in annual revenues, most of whom benefit directly or indirectly from the benefits of liability certainty regarding third party content online. CCIA requests that this statement be included in the record of this hearing.

I. Introduction

In 1998, Congress recognized that Internet investment would not occur if service providers faced copyright infringement liability for third party content that they handled "in the ordinary course of their operations". *See* S. Rep. 105-190, at 8 (1998). The Digital Millennium Copyright Act addressed this problem through a delicate compromise whereby lawful services which respond expeditiously to allegations of infringement receive the benefit of liability limitations.[1] This compromise at the heart of the DMCA imposes upon service providers the costs of responding to millions of complaints in exchange for safe harbors from liability, while guaranteeing rights-holders a rapid response to claims in exchange for the responsibility to affirmatively report infringement.

II. Significance of the DMCA

The Section 512 safe harbor provides online intermediaries a measure of certainty in the

[1] 17 U.S.C. § 512.

face of extraordinary liability risks. Although DMCA compliance can be expensive for private sector Internet services, it is widely regarded as the cost of market entry for an Internet-based service that handles third-party content: a regulatory obligation undertaken by responsible corporate citizens.

By guaranteeing that service providers who respond expeditiously to infringement complaints will benefit from liability limitations, safe harbor protections enable the Internet industry to provide great economic benefits to the economy without the risk of being exposed to penalties based on misconduct by third parties using their service.

A large number of U.S. and even foreign sites invest considerable resources in DMCA compliance. Today, this successful framework regulates how numerous online services, including search engines, broadband providers, caching services, and webhosts address third party infringement. A pillar of modern Internet policy, the DMCA is so crucial to Internet and telecommunications sectors that it has been incorporated as a binding bilateral obligation in nearly a dozen U.S. Free Trade and Trade Promotion Agreements. Recognizing that liability risks "weaken private sector confidence" and impede market entry, numerous countries around the world have followed the U.S. lead in providing liability limitations to online services.[2] According to Copyright Office records, over 60,000 online services have complied with the formalities necessary to receive protection under the DMCA.[3] An even larger number of individuals and businesses rely upon those DMCA-protected service providers to communicate, find goods, services, and information, and compete in the global marketplace at lower costs. The industries that rely upon these protections contribute enormously to economic growth, representing an online economy with a GDP larger than the entire nation of Canada. Since the millennium, they have accounted for 10% of growth in highly developed nations,[4] and estimates suggest the Internet contribution to the economy will reach $4.2 trillion across all G-20

---

[2] *See* OECD, *The Role of Internet Intermediaries in Advancing Public Policy Objectives*, at 15 (2011) *available at* http://dx.doi.org/10.1787/9789264115644-en. Continued U.S. dominance in the Internet sector may result in part from the fact that these protections are often inadequately secured in foreign countries, causing greater liability risks. *See* Martin H. Thelle & Svend T. Jespersen, "Online Intermediaries: Assessing the Economic Impact of the EU's Online Liability Regime," at 7 (2012), *available at* http://www.europeandigitalmedia.org/uploads/Press/documents/Copenhagen%20Economics-Online%20Intermediaries-201201.pdf

[3] *See* U.S. Copyright Office, Directory of Online Service Provider Designated Agents, *at* http://www.copyright.gov/onlinesp/list/a_agents.html.

[4] Matthieu Pélissié du Rausas *et al.*, *Internet matters: The Net's sweeping impact on growth, jobs, and prosperity* (McKinsey Global Institute, May 2011), at 1, *available at* http://www.mckinsey.com/insights/high_tech_telecoms_internet/internet_matters.

economies by 2016.[5] In 2011 alone, search technology provided an estimated $780 billion in value worldwide.[6] These platforms are not just commercial actors themselves, but platforms and enablers of third-party commerce, and thus bring powerful technology and cost savings to small enterprises who could not necessarily afford it. Internet-enabled trade can also increase export opportunities by removing cost barriers.[7]

Just as DMCA-compliant platforms have revolutionized commerce, they have also transformed modern discourse and political activity. Online platforms such as YouTube have radically altered civic participation, disintermediating historical gatekeepers, and giving voice to those who otherwise could not reach a global audience. This is clearly evident in politics: although it is difficult today to envision national elections without online campaign videos, this development has occurred almost entirely within the last 10 years.

III. How, When, and Why the DMCA Works

Online services do not receive the DMCA's safe harbor protections for free. In order to qualify, a service provider must:

- adopt and implement a policy to terminate access to repeat infringers, 17 U.S.C. § 512(i).
- accommodate "standard technical measures," should a consensus standard be in use, 17 U.S.C. § 512(i)(B);
- designate on its service, on its website, and to the Copyright Office, contact information of "an agent to receive notifications of claimed infringement," 17 U.S.C. § 512(c)(2); and
- most importantly, develop a compliance program that "expeditiously" facilitates the takedown of allegedly infringing content upon actionable notice by rightsholders or their authorized representatives.

The DMCA enforcement process begins when rights-holders notify Internet services of allegedly infringing content online. The process begins with the rights-holder because only rights-holders can reliably be certain of what the rights-holder owns, or has licensed. One

[5] David Dean, *et al.*, BCG, *The Internet Economy in the G-20: The $4.2 Trillion Growth Opportunity* (2012), *available at* http://www.bcg.com/documents/ file100409.pdf.

[6] Jacques Bughin *et al.*, *The impact of Internet technologies: Search* (McKinsey Global Institute 2011), at 1, *available at* http://www.mckinsey.com/insights/marketing_sales/measuring_the_value_of_search.

[7] World Economic Forum, *Enabling Trade, Valuing Growth Opportunities* (2013) at 19-20.

established principle of the DMCA, however, is that it is not required (or economically feasible) for a site or service to preemptively monitor or filter data that crosses a given network. 17 U.S.C. § 512(m)(1). Nevertheless, many online services exceed their legal obligations in protecting the content and brands of others, investing millions in additional voluntary efforts, going above and beyond the DMCA.

Unfortunately, the protections of the DMCA are not so extensive as to protect lawful services from being litigated into bankruptcy. In *UMG Recordings, Inc. v. Shelter Capital Partners LLC*, 718 F.3d 1006 (9th Cir. 2013), the "promising start-up" Veoh and its investors were ultimately exonerated, but not before the plaintiffs' extended litigation bankrupted the DMCA-compliant online video site.[8] Viacom has arguably subjected YouTube to a similar strategy; the difference being that Veoh lacked the resources to survive years of marathon litigation. *See Viacom Int'l Inc. v. YouTube, Inc.*, No. 13-1720 (2d Cir. 2013) (pending).

If liability risks for DMCA-compliant services increase, this will have the effect of discouraging DMCA compliance, since companies will see no value in expensive compliance that yields no benefit. This unhappy result would injure both service providers and rights-holders, and it is thus best to consider "the DMCA's safe harbor for ISPs to be a floor, not a ceiling, of protection."[9] Were the DMCA allowed to become nothing more than an invitation to interminable litigation, the online services depending upon it will have merely exchanged ruinous liability for ruinous legal fees.

IV. DMCA Abuse Results From Inadequate Deterrence.

One shortcoming of the DMCA is that its injunctive-like remedy, combined with a lack of due process, encourages abuse by individuals and entities interested in suppressing content. The absence of due process in the DMCA was not a mistake, however; it was designed into the statute to ensure rights-holders could gain expedient relief without judicially-related delay or cost. As the Center for Democracy & Technology noted in a 2010 white paper, the incentives of the DMCA system are such that

"Content hosts have a strong incentive to comply promptly with any facially

[8] Eliot Van Buskirk, *Veoh Files for Bankruptcy After Fending Off Infringement Charges*, WIRED, Feb. 12, 2010, *at* http://www.wired.com/business/2010/02/veoh-files-for-bankruptcy-after-fending-off-infringement-charges/ ("History will add online video site Veoh to the long list of promising start-ups driven into bankruptcy by copyright lawsuits — despite the fact that unlike the others, it actually prevailed in court.").

[9] *CoStar Grp., Inc. v. LoopNet, Inc.*, 373 F.3d 544, 555 (4th Cir. 2004).

> proper takedown notice they receive, because doing otherwise could jeopardize their crucial safe harbor protection. Even when a takedown notice targets non-infringing content, therefore, it is highly likely to result in the removal of that content – and hence the undue muzzling of legitimate speech."[10]

The substantial costs of forfeiting the safe harbor enables self-identified rights-holders to exploit the statute's incentive structure to effectively censor non-infringing content.

Because intermediaries bear large and measurable costs for failing to retain the safe harbor, but less quantifiable costs (in the form of potentially irate users and social losses to free expression and competition) from wrongful takedowns, many services naturally default to removing content without question – as Congress intended. Although most rights-holders make good faith use of the DMCA, there are numerous well-documented cases of misuse of the DMCA's extraordinary remedy of disappearing content.[11] Preventing such abuses would be an appropriate subject of further inquiry.

---

[10] Center for Democracy & Technology, *Campaign Takedown Troubles: How Meritless Copyright Claims Threaten Online Political Speech*, Sept. 2010, at 3, *available at* http://www.cdt.org/files/pdfs/copyright_takedowns.pdf.

[11] *See, e.g.*, http://www.project-disco.org/intellectual-property/020514-this-post-is-no-longer-available-due-to-why-dmca-abuse-occurs-part-ii/

Testimony of

Future of Music Coalition

On
"Section 512 of Title 17"
Hearing

House Subcommittee on the Courts, Intellectual Property and the Internet

March 13, 2014

House Subcommittee on the Courts,
Intellectual Property and the Internet
2138 Rayburn Office Building
Washington, DC 20515

March 13, 2014

Dear Chairman Goodlatte, subcommittee Chairmen Coble and Marino and members of the committee:

We are pleased to submit the following testimony for the record in this hearing on Section 512 of Title 17.

Future of Music Coalition (FMC) is a national nonprofit education, research and advocacy organization for musicians. Our work over the past thirteen years centers on the ability for musicians and composers to reach potential audiences and be compensated for their work. As artist advocates, musicians, composers, label owners and technologists, we understand the delicate balance Congress struck with this portion of the Digital Millennium Copyright Act. Musicians and other creators directly benefit from the many innovations made possible by the safe harbors outlined in Section 512. The statute has also created some frustrations for smaller artists and rightsholders who may not have the resources to keep up with the scale and scope of potential infringements under the notice-and-takedown provisions enumerated in this part of the Act. We do feel, however, that the balance struck by Congress between innovation and expression and the protections afforded to authors and rightsholders was necessary and astute. We likewise believe that the courts, in their interpretation of this statute, have by and large made the right calls with regard to Congress' intent.

Our testimony will focus on the independent community, which includes individual performing artists, composers, labels and publishers. We will also address the importance of safe harbors to startup technology companies, who are often the ones to develop the next powerful platforms for creative expression and commerce.

I. Online services and the DMCA

Future of Music Coalition is familiar with a range of stakeholder perspectives on the notice-and-takedown and safe harbor provisions of section 512. As is not uncommon for our organization, we find ourselves occupying a middle-ground position. On one hand, we see clearly the benefits of safe harbors that allow Internet companies to deliver useful online services to millions of people, including musicians and other creators. On the other, we understand the frustration expressed by many rightsholders—including individual artists and independent labels and publishers—that the scale and scope of potential infringement can be an impediment to exercising their rights under law.

Major rightsholders and large-scale Internet companies have an obvious stake in how the provisions within Section 512 are applied, but their experiences aren't the only ones to be considered. The independent creator community and technology startups—whose interests often converge but are not always perfectly aligned—are also crucial contributors. Innovation benefits artists and smaller rightsholders who otherwise would have limited means to compete alongside the bigger companies. Tech startups are often the source of these innovations, which could be stymied without safe harbors that limit liability contingent upon certain statutory obligations. Of course, independent artists and rightsholders must be able to protect their copyrights and exploit them in the way that makes the most sense for their business models, which are as varied as the works they create and administer. As we see it, the intent of the statute is to encourage innovation while offering copyright owners a means to protect their interests. This is an incredibly valuable dynamic, and one that should be preserved even as new efficiencies and practices within the existing notice-and-takedown system are explored.

Some would assert that the system is "broken," but the data used to make such a case can also be used to illustrate Section 512's functionality in practice. Google's most recent Transparency Report from September 2013 claims 21.5 million takedown requests, the majority of which are fulfilled.[1] This can be taken as evidence of one company's

[1] *Copyright Removal Requests – Google Transparency Report*. N.p., n.d. Web. 13 Nov. 2013.

compliance in the face of an immense number of notices. On the other hand, it is illustrative of the scale of potential infringement. For its part, trade industry groups like the RIAA point to such numbers as evidence that the underlying premise of the DMCA is flawed. "We are using a bucket to deal with an ocean of illegal downloading," says RIAA Executive Vice President, Anti-Piracy Brad Buckles.[2] RIAA often points to the fact that, while their organization and its major label members utilize automated systems to sniff out potential instances of infringement and send notices to the appropriate service providers, smaller operators—such as independent labels—may not have the necessary resources at their disposal to take a similar tack.

Putting aside for a moment the authenticity of the RIAA's concern for independent sector, the underlying point is valid. Many independent labels or artists may feel that they are better served directing their limited resources towards promoting and marketing their music rather than looking for instances of infringement and firing off takedown notices. The law makes no distinction between large and small rightsholders; neither does it distinguish between superstars and developing artists. This is as it should be. However, it is important that the systems that assist copyright owners and creators in protecting their rights not disadvantage actors operating at a smaller scale. This argument can be extended to the startup community who may not be able to bring a new breakthrough to the marketplace if they are liable for the alleged infringements of their users, or if they must retain specialized legal counsel that might act as a disincentive to innovation and investment. We are not currently in a position to describe how to improve conditions for smaller operators, but we do believe strongly that any solutions should include the perspectives of parties whose businesses operate at a more modest scope.

Creative entrepreneurs and innovators aren't mutually exclusive: some of the most exciting music and media is being created and disseminated by rightsholders with an abiding interest in and understanding of technology; many technologists are music fans as

---

[2] Buckles, Brad. "Music Notes Blog." *Http://www.riaa.com*. Recording Industry Association of America, n.d. Web. 13 Nov. 2013.

well as creators. Encouraging innovation—creative and technological—at an incipient stage is perhaps as important, if not more so, than preserving the business models of established players at the expense of new ideas and expression.

II. Automated systems and content identification technologies

Uniform technology standards, interoperable rights ownership databases and novel systems to identify music and other content can help alleviate some of the tensions experienced by parties subject to Section 512. YouTube's Content ID, for example, is an efficient and broadly utilized system that affords flexibility to rightsholders with regard to whether a potentially infringing use is blocked, monetized or harnessed for demographic and other useful data. Content ID, however, is proprietary, and only applies to the YouTube ecosystem. Still, it represents a powerful tool for those in a position to benefit from its ability to recognize content, whether for the purposes of remuneration or refusal of use. It is important to note, however, that some uses are resistant to automated interpretation. For example, judges employ a flexible and sometimes idiosyncratic test to determine the "fairness" of an infringing use; there is not yet a machine on the planet earth that can reliably make such calls. It may be that expanded systems for content identification will serve as a useful tool for rightsholders and services, but it is unlikely that these technologies will solve every stakeholder concern with regard to Section 512. Other parts of statute—as well as court rulings—do and must play a part in informing the purpose and scope of Section 512.

III. Pitfalls of overbroad approaches

One clear takeaway from recent legislative attempts to address infringement is that an "obligation to monitor" is not in the interests of innovation and expression—creative or otherwise. The Stop Online Piracy Act (SOPA), for example, had the stated goal of expanding the ability of the United States to respond to large-scale, commercial infringement of American intellectual property abroad. This is a worthwhile objective, and certainly something within the authority of Congress to address, even in the wake of public protests against SOPA. A clear concern with that bill, however, was that the initial draft appeared to include language that may have compelled Internet service providers to

police their networks for potential infringement committed by their users. Given the difficulty courts sometimes have in issuing rulings based on evidence presented under highly specific circumstances, it seems unwise to leave decisions about what is and isn't an infringement up to technology companies who may lack the requisite expertise to make such calls. It is hardly a matter of consensus that the DMCA's safe harbors and notice-and-takedown requirements require amendment. Even if they did, such an update must be narrowly focused and not a part of legislation with so many moving pieces that even the best-trained lawyers have difficulty comprehending how these provisions square with a bill's stated goal. A better approach would be for stakeholders to work together to minimize the instances of an infringing link being reposted, or coming up with collaborative ways to utilize data to discourage repeat infringement.

Given the complexities of addressing the needs of a broad array of stakeholders, FMC acknowledges that the DMCA does a fair job of establishing a balance between the interests of the technology and rightsholder communities. We also feel that the courts have, thus far, made the correct determinations with regard to their interpretation of section 512, which is to say that Congress established safe harbors for the very reasons brought to light in the many cases upholding them. There are, of course, some riddles within the subsections of this part of the Act, including the infamous 512(c). We have no unique insight as to whether the contemporary construal of these provisions is aligned with the intent of Congress at the time of the statute's drafting. We will say, however, that any effort to assemble stakeholders in dialog around these issues may go some way towards mitigating tension and distrust among the various parties, and perhaps illuminate a way forward on shared concerns. We look forward to ongoing stakeholder dialog around these and other matters, such as the upcoming DMCA forum hosted by the United States Patent and Trademark Office.

IV. Conclusion

It has been said that Congress is not always best arbiter of technology issues, and that top-down mandates in the form of federal statute can place caps on innovation and hinder the growth of new markets. However, in the case of Section 512, Title 17, it appears that

lawmakers got a lot right. Without the safe harbors established for Internet service providers, there is a strong likelihood that today's engines of creativity and commerce simply would not exist. It is also important to view these provisions through a broader lens than just the marketplace; speech and civic participation are also beneficiaries of Section 512's allowances and restrictions. What is currently being debated is the scrupulousness of the statute as corresponds to the needs and desires of various stakeholders with sometimes competing agendas. While it is true that the law sets the parameters for all players in a marketplace, it also establishes the space for breakthroughs to occur. On balance, the Section 512 achieves its aims in limiting liability for those who would create platforms for expression and commerce in the networked realm while affording rightsholders with a means to address infringement. No system is perfect, and it is well within Congress' right to reexamine the effectiveness of frameworks enacted two decades ago. But legislators should also be commended for having the foresight to devise statute that has served numerous productive ends since the time of its drafting—were that we could say that for every bill passed in Congress. As the subcommittee considers how (or whether) to optimize existing copyright law to reflect contemporary realities, it would do well to consider what Congress got right with the enactment of Section 512 of Title 17.

Casey Rae
Interim Executive Director
Future of Music Coalition