AUTHENTICATED
U.S. GOVERNMENT
INFORMATION
GPO

INTERNET PROTOCOL AND BROADBAND SERVICES LEGISLATION

HEARING

BEFORE THE

SUBCOMMITTEE ON TELECOMMUNICATIONS AND THE INTERNET

OF THE

COMMITTEE ON ENERGY AND COMMERCE

HOUSE OF REPRESENTATIVES

ONE HUNDRED NINTH CONGRESS

FIRST SESSION

NOVEMBER 9, 2005

Serial No. 109–68

Printed for the use of the Committee on Energy and Commerce

Available via the World Wide Web: http://www.access.gpo.gov/congress/house

U.S. GOVERNMENT PRINTING OFFICE

26–998PDF WASHINGTON : 2005

For sale by the Superintendent of Documents, U.S. Government Printing Office
Internet: bookstore.gpo.gov Phone: toll free (866) 512–1800; DC area (202) 512–1800
Fax: (202) 512–2250 Mail: Stop SSOP, Washington, DC 20402–0001

COMMITTEE ON ENERGY AND COMMERCE

JOE BARTON, Texas, *Chairman*

RALPH M. HALL, Texas
MICHAEL BILIRAKIS, Florida
Vice Chairman
FRED UPTON, Michigan
CLIFF STEARNS, Florida
PAUL E. GILLMOR, Ohio
NATHAN DEAL, Georgia
ED WHITFIELD, Kentucky
CHARLIE NORWOOD, Georgia
BARBARA CUBIN, Wyoming
JOHN SHIMKUS, Illinois
HEATHER WILSON, New Mexico
JOHN B. SHADEGG, Arizona
CHARLES W. "CHIP" PICKERING, Mississippi, *Vice Chairman*
VITO FOSSELLA, New York
ROY BLUNT, Missouri
STEVE BUYER, Indiana
GEORGE RADANOVICH, California
CHARLES F. BASS, New Hampshire
JOSEPH R. PITTS, Pennsylvania
MARY BONO, California
GREG WALDEN, Oregon
LEE TERRY, Nebraska
MIKE FERGUSON, New Jersey
MIKE ROGERS, Michigan
C.L. "BUTCH" OTTER, Idaho
SUE MYRICK, North Carolina
JOHN SULLIVAN, Oklahoma
TIM MURPHY, Pennsylvania
MICHAEL C. BURGESS, Texas
MARSHA BLACKBURN, Tennessee

JOHN D. DINGELL, Michigan
Ranking Member
HENRY A. WAXMAN, California
EDWARD J. MARKEY, Massachusetts
RICK BOUCHER, Virginia
EDOLPHUS TOWNS, New York
FRANK PALLONE, Jr., New Jersey
SHERROD BROWN, Ohio
BART GORDON, Tennessee
BOBBY L. RUSH, Illinois
ANNA G. ESHOO, California
BART STUPAK, Michigan
ELIOT L. ENGEL, New York
ALBERT R. WYNN, Maryland
GENE GREEN, Texas
TED STRICKLAND, Ohio
DIANA DEGETTE, Colorado
LOIS CAPPS, California
MIKE DOYLE, Pennsylvania
TOM ALLEN, Maine
JIM DAVIS, Florida
JAN SCHAKOWSKY, Illinois
HILDA L. SOLIS, California
CHARLES A. GONZALEZ, Texas
JAY INSLEE, Washington
TAMMY BALDWIN, Wisconsin
MIKE ROSS, Arkansas

BUD ALBRIGHT, *Staff Director*
DAVID CAVICKE, *Deputy Staff Director and General Counsel*
REID P.F. STUNTZ, *Minority Staff Director and Chief Counsel*

SUBCOMMITTEE ON TELECOMMUNICATIONS AND THE INTERNET

FRED UPTON, Michigan, *Chairman*

MICHAEL BILIRAKIS, Florida
CLIFF STEARNS, Florida
PAUL E. GILLMOR, Ohio
ED WHITFIELD, Kentucky
BARBARA CUBIN, Wyoming
JOHN SHIMKUS, Illinois
HEATHER WILSON, New Mexico
CHARLES W. "CHIP" PICKERING, Mississippi
VITO FOSSELLA, New York
GEORGE RADANOVICH, California
CHARLES F. BASS, New Hampshire
GREG WALDEN, Oregon
LEE TERRY, Nebraska
MIKE FERGUSON, New Jersey
JOHN SULLIVAN, Oklahoma
MARSHA BLACKBURN, Tennessee
JOE BARTON, Texas, (Ex Officio)

EDWARD J. MARKEY, Massachusetts
Ranking Member
ELIOT L. ENGEL, New York
ALBERT R. WYNN, Maryland
MIKE DOYLE, Pennsylvania
CHARLES A. GONZALEZ, Texas
JAY INSLEE, Washington
RICK BOUCHER, Virginia
EDOLPHUS TOWNS, New York
FRANK PALLONE, Jr., New Jersey
SHERROD BROWN, Ohio
BART GORDON, Tennessee
BOBBY L. RUSH, Illinois
ANNA G. ESHOO, California
BART STUPAK, Michigan
JOHN D. DINGELL, Michigan, (Ex Officio)

CONTENTS

Page

Testimony of:

Bowe, Frank G., Professor, School of Education and Allied Human Services 125
Clark, Tony, President, North Dakota Public Service Commission 130
Ellis, James D., Senior Executive Vice President and General Counsel, SBC Communications 20
Hassch, Harry, Executive Director, Community Access Center 134
Kimmelman, Gene, Senior Director of Public Policy, Consumers Union 140
Krause, Tim, Chief Marketing Officer and Senior Vice President, Government Relations, Alcatel North America 24
Mitchell, Paul, Senior Director and General Manager, Microsoft TV Division, Microsoft Corporation 27
Praisner, Hon. Marilyn, Member, Montgomery County Council 34
Putala, Christopher, Executive Vice President, Public Policy, Earthlink, Inc 41
Rehberger, Wayne M., Chief Operating Officer, XO Communications, Inc . 64
Salas, Edward A., Staff Vice President, Network Planning, Verizon Wireless 69
Wiginton, Joel K., Vice President and Senior Counsel, Sony Electronics ... 147
Willner, Michael S., President and Chief Executive Officer, Insight Communications 75
Wilson, Delbert, General Manager, Industry Telephone Company 150
Yager, James, Chief Executive Officer, Barrington Broadcasting Company, LLC 83

Material submitted for the record by:

ADC Telecommunications, statement of 104
American Homeowners Grassroots Alliance, prepared statement of 161
Edison Electric Institute, prepared statement of 164
Nichols, Willard R., American Public Communications Council, prepared statement of 170
Richardson, Alan H. President and CEO, American Public Power Association, prepared statement of 185
Wiginton, Joel K., response to questions from Hon. Cliff Stearns 190
Willner, Michael S., response to questions from Hon. Jay Inslee 192
Response to questions from Hon. Cliff Stearns 195

INTERNET PROTOCOL AND BROADBAND SERVICES LEGISLATION

WEDNESDAY, NOVEMBER 9, 2005

HOUSE OF REPRESENTATIVES,
COMMITTEE ON ENERGY AND COMMERCE,
SUBCOMMITTEE ON TELECOMMUNICATIONS
AND THE INTERNET,
Washington, DC.

the subcommittee met, pursuant to notice, at 10:11 a.m., at 2123 Rayburn House Office Building, Hon. Fred Upton (chairman) presiding.

Members present: Representatives Upton, Stearns, Gillmor, Whitfield, Cubin, Shimkus, Wilson, Pickering, Radanovich, Bass, Walden, Terry, Ferguson, Sullivan, Blackburn, Barton (ex officio), Markey, Wynn, Doyle, Gonzalez, Inslee, Boucher, Towns, Gordon, Rush, Stupak, and Dingell (ex officio).

Also present: Representative Buyer.

Staff present: Howard Waltzman, chief counsel; Neil Fried, majority counsel; Will Nordwind, policy coordinator; Kelly Cole, majority counsel; Jaylyn Jensen, senior research analyst; Anh Nguyen, legislative clerk; Peter Filon, minority counsel; Johanna Shelton, minority counsel.

Mr. UPTON. We have a lot ahead of us, so we are going to start just a little bit late. I will do my best with the gavel, remind members later, as they come, that they try to strictly adhere to the 5-minute rule, for questions as well as the opening statements. Good morning. Today's subcommittee hearing is on a staff draft to create a new statutory framework for Internet protocol and broadband services. The draft would update our communications laws to keep pace with the dramatic changes in technology and consumer demand which have transpired since passage of the 1996 Act. In my opinion, such an update is long overdue.

In planning the subcommittee's agenda for this Congress, I wanted to chart an ambitious course for enactment of reform legislation by the end of this Congress. This year, the subcommittee has held four hearings on how IP-enabled services are changing the face of communications and the voice, video, and data services marketplaces, which only underscores my desire to get this done in this Congress. Part and parcel of my desire to enact legislation this Congress, I want this to be bipartisan legislation. To that end, Chairman Barton and I, along with Ranking Member Dingell, Ranking Subcommittee Member Markey, and our staffs, have been working for months in good faith to achieve bipartisan consensus.

And I believe that much progress has been achieved, and I am encouraged that we will, in fact, achieve bipartisan consensus.

In light of a dwindling number of days potentially left in this legislative year, Chairman Barton and I decided that it was important to move the process along by publicly releasing this staff draft before us today and holding this legislative hearing. I appreciate the complete cooperation of both Mr. Dingell and Mr. Markey on this hearing, which resulted in our diverse and very lengthy list of witnesses and observers before us today. And I appreciate all of our witnesses for being here. I particularly want to welcome Mr. Hap Haasch, who is from my district in Kalamazoo, for being with us today on behalf of the Alliance for Community Media.

I want to say that I look forward to continuing our bipartisan discussions with both Mr. Dingell and Mr. Markey—not to mention all the members on both sides of the aisle—as we move beyond this hearing and toward an eventual markup in this subcommittee and beyond. In order to quell the rumor mill, let me state for the record that we will not be marking up this bill next week. It was never our intention to do so, either in full or subcommittee. But let me make it clear, this bill is one of our top priorities, and I intend to work with Chairman Barton to move it. We have examined these issues for almost a year now, and it is time for subcommittee and full committee action.

In terms of the substance, this staff draft rightly creates a new statutory framework for IP and broadband services that emphasizes a reliance on market forces in this competitive and dynamic sector, and I want to focus right now on one key element of that framework. The staff draft before us attempts to streamline the franchise process for broadband video service providers in order to expedite the entry of a new, third competitor into the video marketplace. Such competition, the sooner the better, will be good for consumers.

Moreover, the staff draft makes sure that if we are going to depart from the legacy franchise model, that it is for a service which is different than today's cable service. However, in creating a streamline franchise process for broadband video services, the staff draft attempts to preserve critically important elements of the legacy franchise mechanism, mainly, (1) a 5 percent franchise fee; (2) PEG carriage requirements; and (3) an explicit preservation of local government's police powers related to the orderly and safe use of rights of way, including the time, place and manner for construction.

In addition, this staff draft not only prohibits redlining, but also preempts State laws which prohibit municipalities from building their own broadband networks and offering their own broadband video services. That way, if a municipality wants to serve any or all it's citizens, it can do so. And I would ask unanimous consent at this point to place on the record letters from the APPA and the Tropos Networks in support of the municipal broadband provisions in the staff draft.

In closing, I want to stress that this is a staff draft, and that this public hearing is an opportunity to give members of this subcommittee and the public a chance to debate and learn more about the issues. The next step will be an open, public markup at our

subcommittee and then full committee, not to mention open and public proceedings on the House floor, to say nothing about this interprocess. Between now and the next step, we have plenty of work ahead of us. We will continue to work with members on both sides of the aisle and all interested parties through the entire process. Again, I want to just remind my members of this subcommittee that we are going to limit ourselves strictly to the 5-minute rule, and I have served a good example by finishing 1 second early. Would recognize the ranking nmmber of the full committee Mr. Dingell for an opening statement from the great State of Michigan.

Mr. DINGELL. Mr. Chairman, I thank you for your very kind recognition, and I am pleased to hear you discuss the staff draft. I am not sure whether you are indicating greater or lesser enthusiasm for this staff draft than I am. I had understood that we were working closely together, you, and Mr. Markey, and my good friend the chairman of the committee. But a funny thing happened on the way to this hearing, and we now find that we have a staff draft and all of the work that had been done by you and I, Mr. Barton and Mr. Markey, appears to have vanished somewhere into a black hole. I find that this is somewhat stressful as a trust that we have on this side, or the feeling that we have that there is a bipartisan effort to achieve a resolution of a problem, which we all agree exists with regard to updating the Telecommunications Act to assist us to have a better ball under which we could work.

In order to assist you and my good friend the Chairman, I will see that our staff furnishes you and others in the industry with both our addresses on this side of the aisle and our telephone numbers so that you may know how to contact us. And we will also see that we have the different means of electronic communications that we have made available to you and to our friends in the industry so that you will know how to reach us about matters of this kind. We will either also instruct our staff to see to it that your staff has these telephone numbers because they appear to have forgotten to discuss with us the content of this draft. And although I will observe that parenthetically we were seeking to address these matters in good faith.

I will be listening during the course of our future discussions to see whether similar good faith has been exercised on the Republican side of the committee, and whether this indicates to us that we may continue to work in a friendly, harmonious, open bipartisan fashion with our dear friends on the Republican side.

Having said this, many of us have fought for a long time to remove barriers holding back competition in voice, video and broadband markets. The process leading to this draft legislation started well. In several bipartisan discussions, we found much common ground. Committee staff worked diligently and released bipartisan draft legislation in September. That was not perfect according to the minds of any participant, but it was progress. It reflected the need to find a meaningful balance between the policy issues and interests. The initial draft received mixed reviews and considerable comment, which we thought we were addressing in a suitable fashion. Yet nearly everyone appreciated the—process and found the draft workable. Staff began working on changes as appropriate. With regard to the initial draft, both the process and the substance

were well on their way to what we thought would be a successful legislative achievement.

The same cannot be said of this curious staff draft legislation now before us today. In stark contrast to our earlier efforts, this process and this staff draft was not inclusive or bipartisan, and, of course, the resulting product is, at best, a fine example of the staff's predilection on these matters. I am extremely displeased at this kind of behavior by the majority, and I observe that it threatens in a very significant way what had been a good working relationship on this matter.

Comparing the two versions, it is clear that changes swing consistently, if not universally, in the direction of only one group of affected stakeholders. Most other stakeholders are worse off. Moreover, the draft before us undermines long-standing objectives of fostering localism, competition and diversity. For each of the changes from the earlier bipartisan staff draft—and there are many—we must ask ourselves does this—the changes in this staff draft strike the right policy to usher in competition, innovation and investment that we all seek, and will this staff draft enable us to complete our business before the conclusion of this session, because good will has been somewhat afflicted by the results of these matters. Will the change have collateral effects on other parties? Will the change bring predictability and certainty to the marketplace? Or will it spawn more confusion and litigation?

In asking these questions, a number of changes warrant close scrutiny. First, legitimate interests of the cities are not protected. The franchise fee provisions in the draft no longer keep our local governments financially whole. Although the draft retains the 5 percent fee, it alters revenues on which the fee is paid in a way that could dramatically reduce revenues to our cities and towns. The rights of way provision place new restrictions on a city's ability to manage its property. I would note that this was a matter of importance to me and my colleagues on this side because we felt that preserving the cities and their financial affairs intact was an important part of the resolution of the questions before us.

Second, the draft marks a fundamental shift in basic and long-standing video obligations enacted to ensure competitive marketplace requirements that are statutory today, including must carry, retransmission consent, program excess, closed captioning, consumer electronics capability and compatibility, and retail availability are all relegated under the staff draft to waivable FCC regulations subject to a 4-year review that could result in their elimination. Does this committee intend to see this judgment over television policy to the whims of the FCC where we have suffered mightily over the years?

Mr. UPTON. Mr. Dingell.

Mr. DINGELL. Third——

Mr. UPTON. We—I tried to make it clear that we were going to try to limit our remarks to 5 minutes, and you are——

Mr. DINGELL. You have been——

Mr. UPTON. Two-and-a-half minutes over.

Mr. DINGELL. You have been kind.

Mr. UPTON. Very generous.

Mr. DINGELL. I——

Mr. UPTON. Yes.

Mr. DINGELL. [continuing] hope you realize that my enthusiasm for the——

Mr. UPTON. I just imagine if this had been the real bill.

Mr. DINGELL. [continuing] staff draft will be further emphasized in the balance, but I will commend this reading to the Chair.

Mr. UPTON. I look forward to reading every word.

Mr. DINGELL. And I will ask unanimous consent that it be inserted into the record.

Mr. UPTON. I would recognize the chairman of the full committee, Mr. Barton, for an opening statement.

Chairman BARTON. Thank you, Mr. Chairman, and thank you for holding this hearing. I want to make a few extemporary comments in addition to my written statement based on what my good friend Mr. Dingell just said. This staff draft is a staff draft, but it is a staff draft that I and Mr. Upton approve. It is not a staff draft that Mr. Markey and Mr. Dingell approve. That is part of the process. We have worked with Mr. Dingell and Mr. Markey and their staffs for almost a year now, and those have been productive discussions, and there has been the normal give-and-take. There is a disagreement about this latest draft about when it was finalized, and Mr. Dingell and I are going to have a meeting on that and some other issues later this afternoon.

But I don't want there to be any misunderstanding, as chairman of the full committee, and Mr. Upton is chairman of the subcommittee, we want to legislate. We want to legislate in a bipartisan fashion. If you are going to legislate, you have got to make changes in drafts, and you have got to hold hearings on them. I made the decision last week that we were going to hold a hearing this week. Mr. Dingell disagreed with that decision, not necessarily because he didn't want to hold the hearing, but because he and his staff had not had time to have input and make some suggestions about revisions to the final draft, and that is the right of him and his staff and Mr. Markey's staff. But you cannot legislate if you don't put it out to the public.

Now the first staff draft that was put out in September, I believe, Mr. Dingell said had mixed reviews. Well, he is being a gentleman about it. It was uniformly knocked. It got nothing but negative reviews. Nobody was for it that I am aware of. Nobody talked to me. So we have made some changes, and we are going to make some changes to this draft. That is what this hearing is about. And we are going to continue to work with our friends in the Minority. This should be a bipartisan effort, but I don't want anybody to be under any misunderstanding. The Energy and Commerce Committee, as long as I am Chairman, is about action. It is not about inaction, and sometimes we have to set timelines, and it is the chairman of the committee that makes those timeline decisions. So I bear total responsibility, and I told Mr. Dingell last week—I said, I don't want you to take any ownership of this if you don't want to. You can call it just what he just did, and he has got every right to do that. So I just wanted to set the record straight about that.

Now, in my last 2 minutes and 23 seconds, I do want to thank you, Mr. Upton, for holding this hearing. We have had four hearings at your subcommittee on Internet protocol technology this

year. We have heard from dozens of witnesses, and we are going to hear from several more today. They talked to us about the effects of new technology on voice, video and data markets, and they claim, and I believe that they are correct, that there is a need for a new, clear statutory framework to govern the delivery of such services.

Our Nation's telephone laws as they are currently structured are based on the principals of common carriage and the belief that only incumbents can truly own the facilities that connect Americans. On the other hand, the notion behind America's cable law is that competition doesn't exist, and since no competitive forces check, the action of a monopoly distributor of multi-channel programming in many markets, that responsibility must fall to the government. That is why we are here today.

The advance of technology has left the Law behind. The statute no longer reflects the technological and competitive reality. Congress has a responsibility to update our communications laws. This is one of the committee's highest priorities. Most of the folks out in the private sector that our governed by these laws are ready to go to work. If we do the new law right, there is going to be an explosion of jobs, growth and opportunity for American workers, and American consumers will get a wide array of new services that were unimagined just a few years ago.

As we move forward in this process, I sincerely look forward to working with all members of the subcommittee and full committee on both sides of the aisle, especially my good friends Mr. Upton, Mr. Dingell and Mr. Markey, to try to perfect this draft. We do want to be bipartisan and we do want to move a bill. At one time, I had hoped we could move a bill before full committee this year. I am not sure that that is going to be possible now, but we can at least hold this hearing, take more comments, hopefully release another draft, and then maybe move to a legislative markup in subcommittee, and depending if we are here in December, we might actually get a markup in this subcommittee this calendar year.

With that, Mr. Chairman, I am 4 seconds over and I yield back.

Mr. UPTON. Note of the 4 seconds. Recognize the subcommittee Mr. Markey for 5 minutes for an opening statement.

Mr. MARKEY. Good morning, Mr. Chairman. On September 15, after 8 months of negotiations on the part of the staff of Chairman Barton, Ranking Member Dingell, Chairman Upton, Mr. Pickering and myself, a bipartisan consensus staff draft was released. That draft, while not perfect, was balanced and designed to treat all parties equitably, meaning from the perspective of all parties, unfairly. It was offered as a starting point from which we could reflect on suggested changes from all affected parties and refine the draft through discussion and continued bipartisan collaboration. I want to thank Chairman Barton and Mr. Upton for the process over those months which led to that bipartisan consensus staff draft.

I am dismayed by the process, however, over the last several days that has led to this hearing and to the latest staff draft, which is neither consensus nor bipartisan. While I understand that some may see the unveiling of the new Barton-Upton draft as moving the process forward, I think it is quite the opposite. On both the overall substance and the process, the Barton-Upton draft represents a sig-

nificant step backward, and in my view, brings us further away from successfully legislating in this area, not closer.

The new staff draft eliminates a provision that extended the prohibition on cable operators and telephone companies buying each other out in region. This has been the foundation of competition in this committee for many years. The cable industry challenges the phone industry, and the phone industry challenges the cable industry. It is a vital engine of progress for which this committee has been justifiably proud. While many of us may lament the prospect of a broadband duopoly in many communities, at least it is a duopoly. Deleting the provision which ensures competition between the cable and telephone industries is a terrible policy decision.

The Barton-Upton draft also reduces the consumer protections required for national standards by the FCC from 11 areas to 4 area. And it also adjusts the fundamental definitions in the bill. For example—for instance, the BITS definition is challenged in a way which raises questions as to whether re-sellers or aggregators of broadband service have any rights or any obligations to abide by network neutrality principles, consumer privacy protections, or consumer protection rules generally. The broadband video service definition is changed in a way that makes the platform which delivers the service a potential vehicle for discrimination.

The Internet is a wonderfully chaotic, open, worldwide network or platform for innovation and an economic engine for the country. I don't understand why we would tinker with a model that has been so widely successfully and embraced by thousands of companies and millions of individuals, and on it to slant public policy in favor of three companies simply so that they can deliver movies to peoples' home. My Own Private Idaho was a movie. It is not supposed to be an articulation of America's broadband policy.

The Barton-Upton draft also changes the basis for calculating franchise fees for municipalities, a shift which will have negative financial consequences for communities across the country, and that undercuts financial support for public access television channels.

In addition, the Barton-Upton draft deleted the placeholder that had been in the consensus draft that would have addressed the question of the extent and timeliness of the telephone companies offering broadband video service to both rural and under-served urban and suburban communities.

The Barton-Upton draft also departs in a major way from the consensus draft by changing the obligations of Bell Company Video Services from statutory responsibilities to mere regulations. In other words, the rules governing must-carry, sports blackouts, close captioning, indecency rules, television content ratings, ownership limits, consumer equipment compatibility, equal employment opportunity rules, program access, close captioning and others, can now be waived by the Commission upon request by the Bell companies.

If that were not sufficient to tilt the playing field enough, the draft adds an additional provision requiring the Federal Communications Commission, every 4 years, to eliminate such any of the rules which it finds in its subjective judgment that affects meaningful economic competition.

I am willing, as I have been throughout the year, to negotiate in good faith and to develop a consensus piece of legislation. I am dismayed that the promising path that the 5-member offices were on toward that goal has been abandoned in the last week for what I see as a detour toward a likely legislative dead end.

I thank the Chairman for calling today's hearing, and I look forward to hearing from the witnesses.

Mr. UPTON. I don't know if I should say thank you or not. Mr. Whitfield is recognized for 3 minutes for an opening statement.

Mr. WHITFIELD. Mr. Chairman, thank you very much, and I don't think any of us are surprised that you and Chairman Barton have come forth with a new draft because, as Chairman Barton accurately stated, there was not anyone that appeared to be enthusiastic about the last draft. I actually am encouraged by this draft before the committee today because many of the provisions set forth offer important guiding principles toward improving our telecommunication laws in an era where we are witnessing the convergence of voice, video and data services on a single platform. Most importantly, the draft creates Federal standards for the deployment of broadband services, and I believe that elevating this issue from the local level to the Federal level accurately reflects the fact of the deployment of broadband services is a national priority. Without a doubt, consumers will benefit from these advanced services, and the draft before us today creates the necessary market incentives to make this deployment happen. And frankly, Mr. Chairman, I believe these changes are overdue, as we have witnessed time and time again by competition in the communications marketplace will bring much needed technological innovation and growth to our country, stimulating our economy and creating jobs.

At the same time, consumers stand to reap tremendous rewards, I believe. It is competition and not excessive regulation or excessive mandates from the government that will stimulate lower prices, faster services, and expanded deployment. Although this draft, I think, has—it is quite obvious has not yet attained broad bipartisan agreement among the members of this committee, I do look forward to working with you and others on this subcommittee and the full committee to update our Federal communications laws for the Internet age. And I am optimistic that this committee can do so, and will not satisfy all of the special interest groups, but will certainly take into account all of their views and come out with a balanced final product.

Mr. UPTON. Thank you. Mr. Boucher?

Mr. BOUCHER. Thank you very much, Mr. Chairman. The draft which is before the subcommittee is a generally well-balanced proposal, and I think it is a useful starting point for this subcommittee's work. It requires a regulatory light touch for Internet applications, much along the line that was recommended by the gentleman from Florida Mr. Stearns, and by me, in a bill that we previously introduced.

The draft before us establishes a clear right for municipalities to offer telecommunication services. Broadband facilities will define the arteries of commerce in this century, much as canals, railroads and highways were the pathways for the economy of earlier eras. For many smaller communities, the municipal provider of

broadband may be the only provider, or it may be a critical second provider, assuring that services are affordable. In larger communities, low-cost WiFi-based mesh networks can assure the wide availability of wireless high-speed Internet access when deployed by local governments. The draft assures that localities can offer these services as long as they abide by the same rules that they impose on private sector providers.

I think it is essential that we provide franchising relief for multichannel video providers if we are serious about welcoming competition by the telephone companies in this market. The draft provides that relief while assuring that all providers pay local franchise fees and offer PEG channels.

While I think the draft broadly strikes the right balance regarding municipal networks, the scope of permissible regulation of Internet applications and video franchising, I have concerns about the way the draft addresses network neutrality. This provision needs additional work. Following the Brand X decision and an FCC rulemaking, it is now clear that broadband platform providers need not accommodate unaffiliated Internet access providers. In the absence of that open access for unaffiliated ISPs, the need for a firm network neutrality provision is all the more apparent. It will be our only assurance that the Internet remains open and seamless as we expect it to be, and as the full utilization of that medium requires that it be.

In simple terms, network neutrality will assure that any Internet user will be able to reach any website of his choosing and be able fully to enjoy the services that are offered by that website without interference by the broadband platform provider. The platform operator should not be permitted to manage the network in a manner that favors his content services to the disadvantage of the unaffiliated content provider who is Internet-based.

The draft contains ambiguous language that permits the platform operator to offer enhanced quality of service to subscribers and to impose compacity limitations on subscribers. While I acknowledge the need for broadband providers who make substantial investments in building networks to be able to offer a high-quality service through their video, their VoIP, and their other offerings, the language should be modified to assure that the platform operator cannot interfere with the delivery of services from unaffiliated Internet websites and that sufficient bandwidth will be available on the platform to accommodate the unaffiliated services.

Mr. Chairman, I look forward to working with you and with the members of the subcommittee and with interested external parties as we seek to achieve that goal. Thank you, and I yield back.

Mr. UPTON. Mr. Gillmor?

Mr. GILLMOR. Thank you very much, Mr. Chairman, and thank you for holding this hearing. And I want to applaud your hard work and your leadership, and Mr. Barton's, in developing this revised draft bill. I also appreciate all the panelists being here.

Mr. Chairman, we were both members of this subcommittee when Congress last updated the telecommunications law, and at that time the Internet was in its infancy, and cell phones were the size of masonry bricks, and Blackberry was only recognized as a fruit. None of us could have imagined the technical advances that

have taken place since the Telecom Act of 1996 was signed into Law, advancements such as voiceover Internet protocol, on-demand media services, wireless web access to even the most rural of areas have Americans becoming increasingly dependent on the technology of the present, as they will become even more so on the technology of the future. And I am pleased to see that there have been so many positives, so many bipartisan forward-thinking provisions within this second discussion draft that attempt to address many of our future needs.

As we begin the process of updating our current laws, I think we need to listen to the message that history left us: burdens from government-imposed regulations smothers the development of emerging technologies and limits long-term investment in this sector of our economy. The areas that are being addressed in the staff draft has become prominent largely due to government inaction. Recognizing that technological advancements are the driving force behind the future health of our Nation's economy, it is vital that we also recognize our Constitutional oversight authority to make certain that this segment of our economy continues to grow.

I think, as you do, that we ought not rush this process, but we have to be sure that we listen to all the stakeholders, including our constituents the American consumers, to ensure that we do out best to address the needs of this very fluid industry and to foster the spirit of competition. So I look forward to what emerges from these hearings, and, Mr. Chairman, I did want to commend you for your determination to assure that America continues to be the bellwether of technological advancement throughout the global marketplace. And I yield back all 16 seconds.

Mr. UPTON. Mr. Doyle?

Mr. DOYLE. Thank you, Mr. Chairman. Mr. Chairman, I have tried to approach these issues that come before this subcommittee with the goal of creating telecommunication policies that will lead to increased competition within industries and more benefits for consumers.

IP technology has the potential to do just that in no time at all. This technology will change every aspect of competition within the telecommunications industry, and it is our job to see that as the state of competition evolves, we have policies in place that do not unfairly tilt the playing field in one direction or the other. Vibrant competition benefits us all because it benefits our constituents. I have said before that most of my constituents are probably more concerned about finding a way to get the same voice, video and data services they currently get only at a cheaper rate. However, the promise of IP technology is undeniable. We will see new services like video and voiceover IP that look, feel and act similar to old services like cable and satellite television and traditional phone service.

The question is should we pass laws that treat the providers of these new services more favorably than we treat existing providers simply to encourage entry into the marketplace, or if regulatory obligations are reduced for a new entrant, should we then go back and reduce these obligations on existing providers? And if we do either of those things, what will be the affect on consumers? I look forward to hearing from out witnesses on this subject because I am

reluctant to create winners and losers in this area simply based upon the services are delivered to consumers.

I also want to highlight one issue that is very important to me as a Member of Congress who has 54 separate political subdivisions in my district, and that is the issue of franchise agreements. Franchise fees have been an important revenue source for municipal budgets since the beginning of cable television. And I know that some of our witnesses feel that the pace of negotiating franchise agreements can affect your ability to vigorously compete in the marketplace, however the system we have in place today ensures that local voices are heard, and that communities are compensated for the use of public right-of-ways. If a franchise process is streamlined, who will my city council members have to call if a problem arises with a provider? And will there be anyone to answer that call and give it the attention that it deserves?

I have also heard that in addition to streamlining the franchise process, this discussion draft could drastically reduce the amount of money franchise fees generate for municipalities. A narrow definition of gross revenue that only includes money collected from subscriber fees and does not include other generally accepted forms of revenue such as advertising fees, will cost Pennsylvania municipalities millions of dollars. This would be a devastating blow to my district at a time when all of these political subdivisions are being forced to cut or reduce municipal services.

In closing, Mr. Chairman, I want to thank our witnesses for agreeing to appear today. I look forward to hearing what they have to say, and I yield back my time.

Mr. UPTON. Mr. Terry?

Mr. TERRY. I waive.

Mr. UPTON. Mr. Ferguson?

Mr. FERGUSON. Thank you, Mr. Chairman. As this country migrates toward a completely digital communications system, I think it is important that we provide consumers and communications providers with legal and regulatory certainty to continue to offer new and innovative services. This discussion draft takes an important step toward that goal. Specifically, I commend you, Mr. Chairman, for your focus on the voiceover IP technology and Internet telephone providers.

VoIP technology allows any broadband Internet connection to be a virtual telephone that provides consumers with affordable and innovative voice services. I know first-hand of the benefits of this technology for our economy as VoIP providers like Vonage which has created over 1,600 jobs in my State of New Jersey. They offer VoIP services as an affordable alternative to traditional wireline telephone service.

Also of utmost importance is a competitive environment for consumers, an environment that provides them with the most options for their dollar, and assures that these new services are both affordable and attainable. To reach this goal, we need to establish a framework that ensures a level competitive playing field for all industries that provide these exciting new offering. By doing so, we will ensure that the consumer market gravitates to consumer demands and at the same time enables the development of sustainable and genuine competition for all of our constituents.

I look forward to hearing from the witnesses present here today as to how we can achieve these goals as we move forward. And, again, I commend Chairman Upton, Chairman Barton, and others, who have worked on this important next step in the process. I yield back.

Mr. UPTON. Mr. Gonzalez?

Mr. GONZALEZ. Thank you very much, Mr. Chairman. And I am going to be brief, maybe not use—well, I have got 2 minutes so I will hurry then. But I will be a mind reader today, and I believe that I can read the minds of all the witnesses and everybody out there in the audience, and that is how do you stay out of the line of fire of what is going on up here regarding process. But please understand how important it is, please put it in context of where we are coming from on this particular issue of process.

First of all, process will always determine the end product. We know that. So it is important that the Minority be part of the process. Majority does the majority's will and does rule at the end of the day because they are the majority, but it does so by respecting the rights of the minority for a good reason, and hopefully that is what will happen here.

Also understand that this particular staff draft in its consideration and the hearing today comes on the heels of a couple of other measures that were considered here, and that was the Energy Bill #2 and, of course, the Digital TV and Medicaid legislation which of course we believe was foisted upon the members of the Minority's side without much input, and even during the process, we weren't really, truly included in any significant measure. I don't believe that it is too late. We are still in the process, and we will jump into the middle of it even if it is a later stage. And I yield back the balance of my time.

Mr. UPTON. Thank you. Mr. Shimkus?

Mr. SHIMKUS. I will pass, Mr. Chairman.

Mr. UPTON. Ms. Blackburn?

Ms. BLACKBURN. Thank you, Mr. Chairman. I want to thank you for holding the hearing today, and I want to thank you, and Chairman Barton, and your staff for the hard work that has gone into producing this draft. As you know, my colleague Representative Wynn and I introduced the Video Choice Act to streamline the process new entrants must undergo to offer video service. We believe that cutting red tape will not only lead to more choices for consumers, but will greatly increase broadband deployment in the country. It is my hope this draft, the subsequent bill, and an updated law will provide the needed relief for all new entrants.

Since the U.S. has fallen to 16th in broadband deployment, the time to act is now. Today, if the local telephone company wants to string fiber to the home of every single constituent in my district and provide high-speed Internet access and voice telephone service, the company does not need to obtain any additional authority from the local government. However, under current law in most States, if that company later decides it wants to provide video over the same lines, it now has to go through local video franchising process in each and every locality. The process will take years; it will cost millions. In my opinion, it is a process that is counterproductive to achieving U.S. superiority in broadband deployment, access and

usage. In today's competitive communications world, the local franchising rules are out of place. The Texas legislature got rid of them, and now the phone companies are investing more in Texas, creating more jobs and more competition. Congress should do the same. Under the committee draft, the localities are indeed made whole by retaining franchise fees and PEG channels. Consumers will benefit from having faster, enhanced Internet access, competitive video service, more choice at lower cost. Local governments will have more revenue. It is the right policy and we should move quickly to make sure that franchise reform is adopted during this Congress.

I look forward to hearing from our panelists.

Mr. UPTON. Mr. Inslee?

Mr. INSLEE. Thank you, Mr. Chairman. You know, while we are having this convergence in the industry in telecommunications, we would like to see some convergence in the Republican and Democratic parties. And I think that is very important in telecommunications policy for the long run, and that is why, although I am dismayed at the moment, I am hopeful that that will continue because I think it is very important that this industry, and the tremendous creative abilities it represents, are not disadvantaged ultimately by some partisan divide. So I hope this discussion continues.

I want to make a couple comments about this draft. It is encouraging, I think, that there is some streamlining of the video franchise process. The competition in that marketplace, I believe, will benefit consumers. It is my hope that this market will drive a more robust broadband deployment. With that, though, I urge my colleagues to seek a franchise policy that really does keep local governments whole and maintains local government control of the rights of way.

Second, one of the most important and positive aspects of this draft, I believe, is the provision seeking to maintain America's Internet freedoms. Section 104, which is called the Net Neutrality Requirement, will help to ensure that Americans have unfettered access to the greatest possible choice of legal Internet content and services, and can connect any un-harmful device of their choice to the broadband network. This connectivity principle enshrined in this provision is good, but they must be further strengthened to give Americans an air-tight guarantee to Internet freedom. Internet access through a broadband video service is still Internet access, so it should also adhere to these Internet freedom requirements.

Third, our concerns that much of the broadband regulations imposed in Internet services may unnecessarily capture services that do not need to be regulated. We should not regulate Internet services such as Google, Yahoo, Amazon or MSN. These hereto four unregulated services, such as free email, have made use of the Internet but have not made the actual connection to the consumer. We should be careful not to regulate any service that is not a substitute for capabilities to send and receive voice communications.

With that, I look forward to restoring the bipartisan tradition in this industry. Thank you.

Mr. UPTON. Mr. Sullivan?

Mr. SULLIVAN. Thank you, Mr. Chairman.

Mr. UPTON. You need to hit the button.

Mr. SULLIVAN. Thank you, Mr. Chairman. It has been a long—this—I thank you for holding this hearing. It has been a long time coming. The Internet has revolutionized our lives. It has had a dramatic impact on the way we communicate, and our laws must reflect those changes. Services based on Internet protocol are the wave of the future, and we can't bury our heads in the sand. We must address the public policy concerns this technology raises within the telecommunications industry.

The regulatory and technological world we face today is not what we faced 10 or 15 years ago, and that is a simple fact. I am pleased that this draft addresses consumer protection standards and ensures access to customers regardless of income. Also PEG requirements in this draft are comparable to current service providers, and the draft continues the current management of right-of-way. This is critical for our communities to have control over their operations, and it has appropriately been addressed in the language before us.

The ability for IP to enable so many diverse technologies is a huge benefit for my constituents and all Americans. Competition—fair competition drives innovation by driving down prices and increasing choices for consumers. Any barriers that impede competition should be eliminated. The fact of the matter is these technologies will affect us all. You, me, all of my constituents, everyone will benefit. The free market works if we will let it.

I look forward to the testimony and I yield back.

Mr. UPTON. Mr. Gordon?

Mr. GORDON. I am ready to listen to the witnesses, Mr. Chairman.

Mr. UPTON. Mr. Towns?

Mr. TOWNS. Thank you very much, Mr. Chairman, to provide us an opportunity to get some additional information. As we stand on the verge of realizing the competition we had all envisioned in 1996, I am anxious for everyone to benefit from current and future technological innovations. It is great to see the technology communities spurring the competition that the market needs, and we should strive for a regulatory framework that encourages it. By having multiple interests into the video services market, customers will have more benefits, positive investment in networks will be encouraged, and more jobs will be created. I am eager to see a widespread deployment of the technologies we have been discussing over the past year.

The services and devices that have been shown to be are incredible, and their availability to everyone in every community is vital. I am confident that our industry friends recognize this and will govern themselves accordingly. My constituents are excited about the communication technologies that exist today and want to see more innovation, more choice, and, of course, lower prices in the future. I am pleased that the cable companies are aggressively competing against the Bells for telephone products, and that companies like Verizon, SBC, have plans to compete against the cable for video services.

But for this innovation to occur, Congress needs to set the rules of the road, and we need to get it right the first time to prevent

accidents. I hope we can advance this issue properly, and more importantly, in a bipartisan manner, Mr. Chairman. Let us keep in mind we should not create a regulatory burden that stops technology from initially reaching our constituents, but we must create a playing field that is level. We don't want winners and losers.

So on that note, Mr. Chairman, I yield back, and I am anxious and eager to hear from the witnesses.

Mr. UPTON. Mr. Bass? Mr. Stearns?

Mr. STEARNS. Thank you, Mr. Chairman, and I thank you for holding this hearing. It looks like you have a full house here, and I notice they are outside standing in the hallway. This is reminiscent of the Telecom Act of 1996. And I suspect after your first draft in September, you got everybody's notice, and now with the second draft, there seems to be more concern. But, I want to compliment you because myself and the staff had some concerns about the first draft, and they are significant changes, we felt, and we helped bring about, and so I want to thank you for some of those changes. I think in the end what most of the people in the audience are concerned about is regulatory certainty and legal certainty, and that any business would appreciate because they can't invest the capital unless they are pretty sure that they have this certainty. And so it is important that we continue to have these hearings, and I compliment you in having all of these panelists because a lot of members who won't be here, I say to the audience, will be listening to them in our offices because of the importance of this bill.

For the past couple years, my colleague Mr. Boucher and I have been working on getting new treatment for IP-enabled services and TV, and to a certain extent, we think we can accomplish these goals. I think to a larger degree the staff draft takes a significant step, as I said earlier, in this direction, but obviously I think we can still make improvements. I think my colleague—I agree with him when he contends that the Net Neutrality Standards in this draft should be strengthened. It is important to all of us. But, again, without this certainty and without this regulatory certainty and this legal certainty, we as Members of Congress will not give the industry the ability to innovate.

And I have also said, Mr. Chairman, with the high-definition television, third generation wireless and broadband, that this economy will be transformed into a whole new economy, and the GDP will go forward at quantum jumps, and it will have a higher standard of living for all Americans. And this bill and what you are doing today, Mr. Chairman, is going to do that. So in a larger extent, this hearing today with all these panelists—witnesses, is really creating a higher standard of living for all of Americans and creating more jobs, higher paying jobs, and ultimately making this country more competitive. And I thank you, Mr. Chairman.

Mr. UPTON. Mr. Rush?

Mr. RUSH. Thank you, Mr. Chairman. Mr. Chairman, we have got a platoon of witnesses before the committee today, and I just want to reiterate and state without any unclarity that my position is that every crook and cranny of this nation should have access to the Internet services. And with that, Mr. Chairman, I will pass on my statement—on my official statement.

Mr. UPTON. Mr. Pickering?

Mr. PICKERING. Thank you, Mr. Chairman. And I want to thank the panelists and everyone that has been working on the two drafts. Let me say to my friends on the other side, there are many issues on the committee where we are simply not going to agree and will have philosophical and partisan differences. But the history of this committee has been on telecom that we have been able to work things out in a bipartisan way, whether it is energy, environment or health care, those are areas that perhaps we have irreconcilable differences. But on this particular area, telecom, where we have had some great accomplishments, I still believe that we can and should work in a bipartisan basis. For 7½ months, staffs worked on the first draft, and sometimes when you work in that way and you try to do it as a member-led process, versus an industry-led process, the first reaction from industry is that no one likes it. Now you could say that is a good and fair thing, or you could say maybe we got it wrong. What we hope is in these hearings is to learn the differences between the first two drafts, use this draft and the first draft as a catalyst to reach consensus. I do hope, Mr. Chairman, that we reestablish and reengage in the bipartisan process of working together to find the common ground as we go forward.

And let me set forward the principles that I hope that our process and our work will lead us to. It should be driven to establish clear preemption policy, clean entry policy, competition not just for one sector of communications but competition to expand and thrive in each sector of communications, and that we find a way to do that in a competitively neutral and a technologically neutral way. I do think that we can find that common ground. I think the bill makes improvements as we look at telco entry into cable and into video, and in that market, that will expand competition.

At the same time, I have concerns that if we do not have a clear interconnection standard, or interoperability standard, that we will not have the corresponding ability to maintain competitive markets in voice and in data. It is very important that as we look at the engines of innovation and investment and competition, the Internet providers, whether they are content or whether they are voice, that we make sure that they are not subject to tolls or fees or the Internet freedom and that they still can provide competition both to video and telcos.

At the end of this day, we want to say we have deregulated. We have set a cleaner policy, a clearer policy, but we have increased competition. And by increasing competition, you will increase investment and innovation in each sector. Those are the goals and the principles that I will be going by, and I think that this committee, whether it is energy or healthcare or whatever we have tried to do, the Chairman has tried to take a principle approach of increasing competition wherever we make policy. And I think that if we do that, we will come out ahead for the American people and for this committee, and we should not simply try to please one sector while leaving out every other sector.

So that is the guidepost that I will be using, and I look forward to working with the Chairman and the rest of the committee with that bipartisan process and with those principles. Thank you, Mr. Chairman.

Mr. UPTON. Mr. Stupak?

Mr. STUPAK. Thank you, Mr. Chairman. This subcommittee has, and will continue, to have disagreements about policy issues, but we have largely kept partisan politics out of this subcommittee. It is a tradition we can be proud of, and I look forward to working with my colleagues on this draft as the process moves forward.

I believe from our subcommittee hearings, as well as my many rural caucus forums, that we have a delicate job ahead of us. We must draft legislation in a way that doesn't overly burden our brightest innovators with laws that can't possibly change as fast as they innovate, but, at the same time, respects the importance of cities' and States' consumer protection laws and social obligations, including Universal Service Fund on which our communications law has been built.

In addition, we won't have done our job if any rewrite doesn't recognize the special needs and challenges of rural communities and communication providers who serve those communities. Broadband is critical for our children, our hospitals, our public safety officers, and our businesses to thrive in the 21st Century. Our rural communities understand this as much as anyone. But while the commitment to rural communication providers and community leaders is unlimited, the resources are not. Congress has a duty to match rural America's commitment. It is clear that we must do better. Despite advances in new technologies to help bridge the digital divide, broadband is still vastly under-deployed in rural America.

The Communications Act of 1996 did a lot of great things. It spurred competition and brought us to where we are here today. Cable, phone, wireless competing and offering better services. The 1996 Act also expanded the Universal Service Fund to bring broadband to community hospitals, schools, libraries, and it is time we take another look at the fund. USF faces challenges from the growing demands on the fund and a shrinking pool of contributors. We have to meet those challenges head-on.

While the staff draft directs the FCC to study expanding the contribution base to include VoIP providers, I believe the language could be stronger to reflect the importance of the fund for rural America. I believe this draft is a good first step, but we need to be careful not to let the process get ahead of policy. That is why I look forward to hearing from our witnesses today and in the coming weeks about how we can refine the draft to better meet the needs of consumers, set out fair and clear rules, and promote competition. I look forward to working with the chairman, and Ranking Member Dingell, and my colleagues on the committee, to make sure that all communities, large and small, urban or rural, are connected to the future. Thank you, Mr. Chairman. I will yield back.

Mr. UPTON. Thank you. Ms. Wilson?

Ms. WILSON. Thank you, Mr. Chairman. I think it is pretty clear that we are on the cusp of returning to a duopoly in wireline service which makes any revisions that we undertake in the Telecom Act particularly important, and I think we need to very carefully think about the direction we are going on.

The draft that we now have is a significant departure from the one that we saw earlier in the year, and that concerns me, particu-

larly as the one that we saw earlier in the year, I think, was a bipartisan draft. And it concerns me if we move forward too quickly based on this current draft—piece of legislation and the imminent approval of the mergers of four large telecommunication companies into two huge telecommunication companies for wireline.

I would also like to look at these problems and these issues from the perspective of consumers, and consumers have benefited tremendously from competition in telecommunications. We need to make sure that competition continues to be what drives innovation and low prices, and anything we do in the Telecom Act has to have that first and foremost.

And I yield the balance of my time.

Mr. UPTON. Mr. Wynn?

Mr. WYNN. Thank you, Mr. Chairman. Mr. Chairman, with your indulgement, I am going to defer my opening statement, but I would like to take a moment to recognize one of the outstanding local officials from my district, the only woman on the panel before us today, the Honorable Marilyn Praisner. She is here wearing many hats. She is speaking on behalf of the National Association of Telecommunications Officers and Advisors, the National League of Cities, United States Conference of Mayors, and the National Association of Counties and Telecommunity. And I think that that reflects the fact that she has exercised over the years a great deal of leadership nationally as well as locally on telecommunication issues. I have had conversations with her about aspects of this bill and they have been very productive conversations. I know she is concerned about protecting the interests of local governments, particularly their revenues, their management of rights-of-way, and protecting consumers interests. I am sure she will share those views with the committee and we will be better for it. But I just wanted to say we are in the presence of an outstanding American and local leader, the Honorable Marilyn Praisner. Thank you for joining us today, Ms. Praisner.

Mr. UPTON. Gentleman yield back his time?

Mr. WYNN. Mr. Chairman.

Mr. UPTON. Gentleman from Indiana?

Mr. BUYER. I would ask unanimous consent for me to participate in this hearing to ask questions of the witnesses to give an opening statement.

Mr. UPTON. Any member have an objection? Hearing none, the gentleman is recognized for an opening statement for 3 minutes.

Mr. BUYER. Thank you, Mr. Chairman, not only for your work, but also that of the ranking members and their staffs. I agree with my colleague Mr. Towns when he has talked about getting it right, and I would say to my friend, Ms. Wilson, part of the problem we have—I don't even want to call it a problem—part of the concern that you may have about you see major industries coming together, we caused that, because we over-regulated on voice and we deregulated on video. The deregulation on video spurred innovation and competition. There is an explosion based on conversions technologies and consumers are beginning to benefit. A the same time, you have got this over-regulation that Congress put place on voice and it has created great pains, so these are going to survive if—and they are going to try to be innovative themselves. So as we

move forward, I agree with my friend Mr. Pickering when he laid out some of his themes or principles because I have mine too, and that is respect the free markets. You do that to ensure a forum that is open, fair and competitive. (2), we need to deregulate for economic security, and that means that the pathways to foster innovation and competition. (3), I agree with themes that are being used out there in industry and around the hill, and that is to—if you must regulate, then do so on service, not on technology. And that is the error that we made back in the first Telecom Act. And I also agree with the theme about regulating on parity. Also about the empowerment of consumers to ensure there is choice. And, in fact, making sure that we have a good balance between our Federal and State jurisdictions on the consumer protection, and who are we—how are we going to increase the access and who all will participate in the USF.

Last, I would mention is with regard to franchise fees. These franchise fees should not be an entry barrier to the marketplace. At the same time, I would think that cable would love to end what is happening out there in all these little towns and cities all across America whereby you enter the renegotiations and, oh, by the way, we need you to do this. We need some upgrade at the park. Can you help us with this and that? And they slip you the list. If that isn't as close to blackmailing the marketplace, I have never seen it. So I am sure that you would love to end that out there, and, you know, I am intrigued and I like what Florida has done.

I mean, Florida has an entertainment tax. We call it a fee. But if you just go to a straight fee on entertainment and let everybody openly compete, it has some attractive features to it.

So let me be circuitous and I will end where I opened, and that was with Mr. Towns' comments on getting it right. I want to thank all the witnesses for being here. I want to thank the committee staff. I—on the other side of Ms. Wilson, I was concerned about the first draft, so I think the second draft is a much more improvement than the first draft, but we still have a way to go, and I appreciate your being here, and let us keep it going. Yield back.

Mr. UPTON. Thank you, Mr. Buyer. At this point, we are ready for our opening statements. Hooray. We are welcomed by Mr. Jim Ellis, Senior Executive VP and General Counsel of SBC; Mr. Tim Krause, Chief Marketing Officer and Senior VP of Government Relations of Alcatel North America; Mr. Paul Mitchell, Senior Director and General Manager, Microsoft; the Honorable Marilyn Praisner, Member of the Montgomery County Council, Montgomery County, Maryland; Mr. Christopher Putala, Executive VP of Public Policy for EarthLink; Mr. Wayne Rehberger, CEO of XO Communications; Mr. Edward Salas, Network Planning for Verizon Wireless; Mr. Michael Willner, President and CEO of Insight Communications, New York; Mr. James Yager, CEO of Barrington Broadcasting Company on behalf of the National Association of Broadcasters. Welcome you back as well.

Ladies and gentlemen, we are prepared for your opening statements. I very much appreciated the opportunity to peruse them last night, and for a lengthy period of time, so thank you for getting them to us in advance. We will try to adhere to the 5-minute

rule to our ability. I would note we are expecting votes about 11:45, so we will go as far as we can.

Mr. Ellis, we will start with you. Your statements are made part of the record in their entirety, so go ahead, Mr. Ellis.

STATEMENTS OF JAMES D. ELLIS, SENIOR EXECUTIVE VICE PRESIDENT AND GENERAL COUNSEL, SBC COMMUNICATIONS; TIM KRAUSE, CHIEF MARKETING OFFICER AND SENIOR VICE PRESIDENT, GOVERNMENT RELATIONS, ALCATEL NORTH AMERICA; PAUL MITCHELL, SENIOR DIRECTOR AND GENERAL MANAGER, MICROSOFT TV DIVISION, MICROSOFT CORPORATION; HON. MARILYN PRAISNER, MEMBER, MONTGOMERY COUNTY COUNCIL; CHRISTOPHER PUTALA, EXECUTIVE VICE PRESIDENT, PUBLIC POLICY, EARTHLINK, INC.; WAYNE M. REHBERGER, CHIEF OPERATING OFFICER, XO COMMUNICATIONS, INC.; EDWARD A. SALAS, STAFF VICE PRESIDENT, NETWORK PLANNING, VERIZON WIRELESS; MICHAEL S. WILLNER, PRESIDENT AND CHIEF EXECUTIVE OFFICER, INSIGHT COMMUNICATIONS; AND JAMES YAGER, CHIEF EXECUTIVE OFFICER, BARRINGTON BROADCASTING COMPANY, LLC

Mr. ELLIS. Mr. Chairman Barton, Chairman Upton, Congressman Dingell and members of the committee, good morning, and thank you for the opportunity for SBC to present its views on the staff draft.

Today competition and innovation have unquestionably changed the way we communicate, the way we use the Internet, in fact, even the way we watch television. It is happening in a continual pace, and it reflects the marketplace conditions that exist today. But despite these great strides, much of our industry remains subject to a shifting regulatory environment that inevitably is going to threaten some of this progress in various ways. That is why we support the staff draft.

We believe it puts in place a more predictable national framework that will be important to the next generation services and networks. The staff draft reflects an important fact, a reality, and what is important to the future is less, not more, regulation. We have any number of examples from our industry that make that very clear. If you look at wireless, that is an opportunity where there was no pervasive regulation. The result has been an absolute flourishing of opportunity and new services in the wireless business. We have gone from 30 million subscribers just 10 years ago, to over 200 wireless subscribers in this country. There are more wireless phones today than there are wired phones. Rates have gone from 50-60 cents a minute not many years ago to pennies today.

The same thing has happened with respect to the broadband market. It didn't exist a few years ago, but we have seen it flourish with very light regulation, both by the States and at the Federal level. Today broadband services are—roughly 40 million subscribers have broadband services, and the rates reflect a decrease from $40-50 not many years ago to less than 20 today by SBC and a number of providers.

Voice over the Internet services, VoIP, same thing. Minimal regulation. The service is flourishing. One incumbent that hasn't been around very long has 1 million customers. Some say Skype is adding 100,000 a day around the world. That is the reality of the marketplace. Even with respect to traditional telephone services where the regulations encourage entry without legacy—burdening the new entrants with legacy regulations, have had a dramatic impact. We have seen that in long-distance. In 1984, $20 got you 50 minutes of long-distance. Today, that same $20 will get you unlimited long-distance. Same thing with respect to the whole package of local, long-distance and vertical services. In the last 5 years, those rates have gone down 30 to 40 percent when you include the bundling discounts.

The one area where we have not seen competition be in any way affected—it has been impervious to competition—is the video services market. It has been 20 years since we had the Cable Act. In that 20 years, there has not been a single movement to have affective transformative competition in the video services market. Since 1995, video/cable rates have increased by 80 percent since 1995. In the last 5 years, they have gone up 40 percent. That is three times the Consumer Price Index. And, unfortunately, the trend continues. In 2005, there have been more increases.

This is why this legislation is important—the legislation as proposed. And I would also say it is also reflected in the Blackburn-Wynn and in the Boucher-Stearns bill. It all reflects that reality of marketplace experience and the importance of seeing to ease of entry of new competitors and without the burden of legacy regulation.

SBC today is in the process of adding to its broadband network. We are going to spend $5 billion over the next 3 years to expand our broadband capability. We are going to do so to offer a number of applications. But, in particular, we will compete with the entrenched cable TV operators in our territory. The legislation is important to encourage that. We particularly think it is important in that it provides our right to enter that market on precisely the same set of rules that cable had when they came into telephony, namely without the burden of the legacy regulations.

We thank the committee staff, the members for their work on this important piece of legislation. We hope you act promptly on the legislation. Thank you.

[The prepared statement of James D. Ellis follows:]

PREPARED STATEMENT OF JAMES D. ELLIS, SENIOR EXECUTIVE VICE PRESIDENT AND GENERAL COUNSEL, SBC COMMUNICATIONS INC.

Good morning. Thank you, Chairman Upton, and members of the committee for offering me the opportunity to speak with you today about the committee's draft reform bill. My name is Jim Ellis, Senior Executive Vice President and General Counsel for SBC Communications Inc.

Two benefits of the bill stand out. First, the bill would establish a single, nationwide policy for the provision of broadband services, including VoIP. Second, the bill would tackle the issue of the extent to which cable franchise regulation, designed for the incumbent cable operators when they entered the market as monopolists, should apply to next-generation video services. By eliminating legacy franchise regulation for these broadband providers, the bill would create incentives for broadband investment, innovation and competition.

It is with respect to this critical issue of video competition where further illumination is particularly warranted. SBC is making massive investments to continue its

transformation from a local phone company to a global provider of advanced network capabilities and innovative services. A critical part of that transformation is SBC's entry into the video services market. Over a powerful new upgrade to its broadband networks, SBC will begin offering a next-generation video service that relies on Internet Protocol or "IP"—the language of the Internet—and that will compete directly with, and we believe outperform, existing cable services. In doing so, SBC will not only offer consumers something they do not have today—a truly potent alternative to the cable incumbents—but also greater access to the newest in broadband technologies and services.

Such an enterprise is not without substantial risk. Accordingly, any progressive legal regime should not impose on SBC and other new entrants legacy franchise rules designed for cable incumbents when they entered the market as monopolists. Doing so would utterly suffocate this much needed competition. Instead, the model should be cable's entry into the voice market using IP technology—known as "VoIP." There, cable faces none of the pervasive legacy regulation imposed on traditional voice service providers like SBC. As a result, cable VoIP is thriving and poised to become a mighty competitive force.

As we sit here, SBC engineers and construction crews are building a new addition to SBC's extensive broadband networks. We call this Project Lightspeed. It is a $5 billion capital project that will drive 40,000 miles of additional fiber into SBC's networks and result in an advanced, broadband network that relies on IP technology. Over it, SBC will offer an integrated suite of voice, Internet access, data and video services. In just its initial phase, Project Lightspeed will extend to approximately 18 million households. This is the fastest and most aggressive deployment plan of its kind.

One of the next-generation products that SBC will offer is an interactive, two-way, IP-based video service that will be unlike—and better than—the cable services available today. SBC's network will not, as cable systems do today, simply broadcast hundreds of channels to each customer's home for descrambling in a set-top box. Rather, SBC will give customers unprecedented control over the way they watch TV. This will mean three things to the consumer:

- First, the ability to interact in real time with the system to control the viewing experience. Subscribers will, for instance, eventually be able to watch a baseball game from multiple camera angles or watch several games live on the same screen. Or, the customer will be able to pause live TV, skip to more detailed information about the product being advertised at that moment, and then pick up the program where she left off.
- *Second, integration of the video experience with other services.* Because the video service will communicate with other IP-based services, customers will be able to display on the TV secure, customized Internet content, such as real-time stock quotes or sports statistics, or display on the family's dedicated TV channel digital photos stored with SBC's Internet access service.
- *Third, control over the video service, not just with a remote control, but with other IP-based devices.* For example, Project Lightspeed will eventually allow a customer, while away from the house, to use a mobile phone to alter parental controls, or tell the system to record a favorite show.

In short, this is not plain-old-cable. It is a game-changing alternative to traditional cable service, and comes at a time when choice is much needed in the video marketplace.

More than twenty years after the Cable Act, and notwithstanding the introduction of Direct Broadcast Satellite or "DBS" service, the video distribution market has yet to witness transformative competition. Cable prices have been rising over three times as fast as the Consumer Price Index ("CPI").[1] And that trend continues: 2005 has already seen another round of price hikes.[2]

---

[1] U.S. General Accounting Office, *Report to the Chairman, Comm. on Commerce, Science, and Transportation, U.S. Senate: Telecommunications, Issues Related to Competition and Subscriber Rates in the Cable Television Industry,* at 20 (Oct. 2003), *available at* http://frwebgate.access.gpo.gov/cgi-bin/useftp.cgi?IPaddress=162.140.64.21&filename=d048.pdf&directory=/diskb/wais/data/gao ("2003 GAO Report") (finding that cable rates have increased approximately 40 percent over a five-year period compared to the approximately 12 percent increase in the Consumer Price Index).

[2] *See, e.g.,* Tony Gnoffo, *Dissecting Comcast's Rate Hikes,* PHILADELPHIA INQUIRER, Mar. 13, 2005, *available at* 2005 WLNR 3875285 (discussing rate hike taking effect in March and noting "[f]or Comcast's customers, rate increases have become an annual affair. Their regularity and steep trajectory—about 6 percent a year since 2001—have been a sore point."); *Charter to Increase Some Rates Starting Next Month,* KALAMAZOO GAZETTE, Feb. 11, 2005, *available at* http://www.mlive.com/news/kzgazette/index.ssf?/base/news-12/1108138819196880.xml; Greg Edwards, *Comcast Raising Cable Rates,* RICHMOND TIMES-DISPATCH, Dec. 7, 2004 (Comcast has an-

It does not have to remain this way. In 2003, the GAO found that the rates of cable incumbents facing competition from a wire-based video provider are approximately 15 percent lower than in the absence of such competition.[3] A 2004 GAO report similarly found that the entry of a broadband service provider offering video service "induce[s] incumbent cable operators to respond by providing more and better services and by reducing rates and offering special deals."[4]

SBC's Project Lightspeed is exactly the kind of wire-based competition that—according to the GAO and, frankly, common sense—will finally and truly challenge the chokehold that the incumbent cable operators have in this market.

But entering the video services market to take head-on an entrenched, incumbent cable operator is a risky and costly enterprise—even under the best of circumstances. It requires enormous investment, which SBC is making without the assurance of a single customer. It is critical, therefore, that laws and regulations designed to protect the incumbent cable provider do not so increase the risk and cost for new entrants that competition is stopped in its tracks. That is, SBC seeks for its IP-based video service the same treatment that the cable companies enjoy when rolling out IP-based voice services: Freedom from legacy regulation designed for incumbents.

As I mentioned, SBC is not building a cable system or offering traditional cable service; thus, it is not subject to the existing cable franchise regulations in the Act. Nonetheless, it is clear that the incumbent cable operators will seek to impede our entry by doing whatever they can to ensure that we face additional, city-by-city franchise requirements. If they are successful, this nascent video competition may well be snuffed out. SBC would, for instance, have to negotiate some 2,000 separate franchise agreements—each of which would take an average of 12-18 months to obtain—in order just to complete its initial three-year deployment plan. And, the franchising obligations will differ from municipality to municipality, making it not only enormously expensive but also entirely impractical for SBC and other new entrants to build out region-wide networks. Having to meet these requirements will radically change the already challenging financial calculus in deploying these IP-based networks and services.

Lawmakers and other policymakers can best foster what promises to be unprecedented competition in the video market by taking steps to ensure that IP-based competitors, and indeed new entrants in general, are not saddled with unnecessary and nefarious legacy cable franchise regulations.

You are likely to hear claims that SBC wants to avoid cable franchise regulation so that it can serve just a select few customers. Don't believe this empty rhetoric. Our Project Lightspeed deployment, in just its initial phase, will reach millions of households in our territory—households that touch all different demographics. And, precisely because SBC is so serious about offering a robust alternative to cable, SBC is preparing to roll out an additional broadband video service called HomeZone. The service will for the first time integrate satellite video with powerful wire-based broadband capabilities. It will have many of the features of our IP-based video service and ultimately can be made available to every household in SBC's service territory that has access to our DSL service—that's some 80% of the households in our territory. SBC's goal is no less than to offer a broadband-based, next-generation alternative to cable across our territory.

Please make no mistake about: Video policy is broadband policy. The economics of deploying next generation broadband networks like Project Lightspeed rest heavily on the ability to capture video revenues. Therefore, Project Lightspeed is a broadband story, as it will enable greater bandwidths and a host of services, not just IP video, over a single platform. With the U.S. lagging behind other industrialized countries in broadband deployment, consumers and communities can only benefit from the type of network investment that will be made possible by robust video competition. The stakes simply could not be higher.

---

nounced rate increases for its Richmond customers ranging from 5.9% to 9.9% for standard analog service); Peter J. Howe, *Comcast Will Raise Cable Rates in January,* BOSTON GLOBE, Nov. 24, 2004; Carolyn Said, *Comcast to Raise Prices by 6 Percent Jan. 1,* SAN FRANCISCO CHRONICLE, Nov. 25, 2004; John Cook, *Comcast Plans to Raise Cable TV Rates,* SEATTLE POST INTELLIGENCER, Nov. 24, 2004.

[3] 2003 GAO Report at 3, 10. *Accord,* Video Choice Act of 2005, S. 1349, 109th Cong., 1st Sess. § 2(3) (2005) (citing GAO finding).

[4] U.S. General Accounting Office, Report to the Subcomm. on Antitrust, Competition Policy, and Consumer Rights, Comm. on the Judiciary, U.S. Senate: Telecommunications, Wire-Based Competition Benefited Consumers in Selected Markets, at 12 (Feb. 2004); *see also id.* at 15 (finding that "the monthly rate for cable television service was 41 percent lower compared with the matched market, and in 2 other [broadband service provider] locations, cable rates were more than 30 percent lower when compared with their matched markets").

Mr. UPTON. Thank you. Mr. Krause?

STATEMENT OF TIM KRAUSE

Mr. KRAUSE. Chairman Upton, Ranking Member Markey, and members of the subcommittee, thanks for the opportunity to appear here today regarding the BITS Act. Alcatel endorses this legislation and requests the committee move it forward in the legislative process without delay.

Alcatel is also a member of the Telecommunications Industry Association, and Alcatel believes the bill was consistent with the TIA's convergence and broadband deployment policies. While Alcatel is a global company with 56,000 employees in 130 countries, it actually has almost 9,000 here in North America and has made over $17 billion in technology investments here. The North American market is vital to Alcatel and the entire technology industry because it is here that consumers are most demanding. And as a result, this market leads the world in innovation. That is why Alcatel's global R&D centers for IP routing and enterprise applications are based in California, and our global R&D center for fiber to the home technologies are based in North Carolina. Alcatel's the leader in broadband access technologies with over 70 million digital subscriber lines shipped to service providers. Alcatel's been selected by SBC as its primary network infrastructure and video integration supplier for Project Lightspeed. It is also involved with numerous other telecommunications companies in the U.S. and around the world who are at various stages in their own plans to deploy broadband video services.

The new broadband networks Alcatel will build for these companies are not mere conjecture. They are reality. We have all read the statistics. The U.S. is not the world leader in broadband deployment, either in terms of penetration or bandwidth. We think by creating a legal framework for the continued emergence of IP-enabled services going forward, we have the chance to position this nation to leapfrog international competition creating, in fact, an export market for our innovation in the form of products and services. The BITS Act will help make this possible in several ways.

First, it generally protects nascent broadband services of all kinds, voice, video, data, from regulation at the Federal, State and local level. Second, the bill extends these protections to specific services such as VoIP and broadband video services in a socially conscious manner. The legislation preserves important public policies such as protecting consumers privacy, guaranteeing E911 access, and maintaining video programming safeguards.

The bill creates a streamlined Federal video franchise process for broadband video services that will ensure—that can be a key driver of continued broadband deployment immediately. The BITS Act achieves this goal while protecting the ability of municipalities to manage their local rights-of-way as well as the video franchise revenue streams they have come to rely on.

The new broadband networks Alcatel is building are unique in the U.S. market. These networks will enable two-way video services that allow for unprecedented subscriber interactivity, including robust parental controls for kid-friendly services, increased ethnic

content, and other personalized applications not possible over existing video services.

Those who ask whether broadband video services as defined in this legislation being deployed by companies like SBC and others are truly distinct from cable TV, I ask you to recognize the answer is yes. MSO's are preparing to invest billions of dollars into their own networks in an effort to compete. If telecommunications carriers were simply rolling out cable TV, there would be no need for such an investment by the cable operators. It is this very type of facilities-based broadband competition that benefits consumers in both quality of service and in pricing.

The BITS Act also includes important Internet neutrality principles. Alcatel fully supports their inclusion into this legislation as an important component of broadband consumer demand.

Finally, I would like to take a moment to commend the bill's authors for being sure to protect the rights of municipalities to enter the broadband market when they determine such action is in the best interest of their local communities. As Congressman Boucher knows, Alcatel was the main vendor to municipal fiber to the home building Bristol, Virginia, and we continue to work with municipalities in an effort to help them achieve their broadband potential where needed.

Mr. Chairman, Ranking Member Markey, members of the subcommittee, thank you for the opportunity to appear here today. I look forward to discussing the issues and answering any questions later.

[The prepared statement of Tim Krause follows:]

PREPARED STATEMENT OF TIM KRAUSE, CHIEF MARKETING OFFICER AND SENIOR VICE PRESIDENT FOR GOVERNMENT RELATIONS, ALCATEL NORTH AMERICA

Chairman Upton, Ranking Member Markey, Members of the Subcommittee. Good morning. My name is Tim Krause, and I am the Chief Marketing Officer and Senior Vice President for Government Relations of Alcatel North America.

Thank you for the opportunity to appear before you today regarding the Broadband Internet Transmission Services Act. Alcatel endorses this legislation, and requests the committee move it forward in the legislative process without delay. Alcatel is also a member of the Telecommunications Industry Association, and Alcatel believes the bill is consistent with TIA's convergence and broadband deployment policies.

The BITS Act will ensure the continued growth of the U.S. broadband market by creating legal and regulatory certainty for the services that flow over powerful new broadband networks. The result will be the continued introduction of Internet-based substitutes for traditional communications services by facilities-based and Internet-based providers alike, including converged triple-play offerings of voice, video, and data across traditionally distinct communications platforms.

Alcatel is a global company with operations in 130 countries, 2004 revenues of 12.3 billion Euros; and worldwide employees totaling 56,000. Alcatel has made over $17 billion in technology investments in North America. We have 8,800 employees in North America, and dedicate more than 20% of our North American revenue to research and development that we conduct in North America—a higher percentage than we reinvest worldwide. Our global R&D centers for IP routing and enterprise applications are based in California, and our global R&D center for fiber to the home technologies is based in North Carolina. Alcatel's customers include traditional phone companies, mobile carriers, private and public enterprises, transportation networks, and satellite operators.

The North American market is vital to Alcatel and the entire technology industry, because it is here that consumers are the most demanding, and as a result, this market leads the world in innovation. The legal and regulatory clarity that the BITS Act will provide will strengthen those qualities in the North American market, and better enable the manufacturing industry to compete in the face of the

commoditization of products from low cost countries, and export new broadband innovations developed here at home abroad.

Alcatel is the worldwide and North American leader in broadband access technologies, with over 70 million digital subscriber lines shipped to service providers. Alcatel has also been selected by SBC as its primary network infrastructure and services supplier for Project Lightspeed, which will deliver integrated IP Television and other ultra-high-speed broadband services to 18 million households by mid 2008. Alcatel will enable SBC to provide this suite of services by building fiber deeper into the SBC network—using shorter copper subloops in existing neighborhoods and building fiber all the way to the premises in new housing developments. Equally as important, Alcatel will enable SBC to deliver multiple services with high quality over a single pipe to each home by leveraging the IP technologies it has developed.

The new broadband network Alcatel is building for SBC is not mere conjecture, but a reality. Alcatel is already deploying such networks in countries across the globe, and that is why the BITS Act is critical for the future of communications in our nation. We have all read the statistics—the U.S. is not the world leader in broadband deployment, either in terms of penetration or bandwidth. Other nations have adopted policies that make broadband deployment a national commitment, while here at home the broadband market has been mired in almost a decade of legal and regulatory arbitrage that has held us back from reaching our full potential. By building on the gains of the Triennial Review and creating a legal framework for the continued emergence of IP-enabled services going forward, we can position our nation to leapfrog the international competition.

The BITS Act will help make this possible in several ways:

First and foremost, it establishes that broadband services of all kinds—voice, video, and data—are interstate in nature and not subject to onerous new regulations at the Federal, State, and Local level outside the confines of the bill itself. This is critical for establishing the certainty needed by facilities-based broadband service providers as well as Internet-based broadband service providers to take the financial risks of innovation in new services.

Second, the bill extends those protections to specific broadband services that are replacing traditional services, such as VoIP and Broadband Video Services, but in a socially responsible manner that preserves long standing policies, such as protecting consumer privacy, ensuring consumers have access to dependable E911 service, as well as video programming safeguards.

Most critically from Alcatel's perspective, the bill creates a streamlined Federal video franchise process for broadband video services. By protecting the ability of municipalities to manage their local rights of way, as well as the revenue streams they have come to rely on from video service providers, yet ensuring broadband video services can be deployed without delay, the BITS Act ensures that broadband video services can be a key driver of continued broadband deployment unlike anything we have seen in the U.S. to date.

The new broadband network Alcatel is building for SBC is truly unique to the U.S. market, and in terms of its broadband video service capabilities it is most definitely not cable TV. SBC's broadband video service will be a two-way, interactive service that allows for unprecedented subscriber interaction with the service through the network. This interactivity enables features such as subscriber-programmed channels, with content such as home movies or photo albums, for instance, that can be made available to other subscribers. Subscribers watching sports programming will have access to numerous camera angles, data integrated from the Internet, and an unprecedented HD experience.

The benefits of the two-way interactive network Alcatel is building for SBC hardly stop there. Parents will have unprecedented capabilities to monitor and control the content to which their children have access in a user-friendly environment. Subscribers of all backgrounds can have access to content that suits their tastes and interests, whether that is Spanish language programming and content, or other ethno-centric programming and services. Additionally, the powerful two-way, interactive network can deliver on the long-standing promise of telemedicine by making interactive healthcare a reality, and be equally as effective in the classroom.

Utilizing IP technology to offer a broadband video service ensures that capacity for each subscriber is maximized, utilizing only that capacity needed to deliver the specific programming being viewed by a subscriber. This eliminates capacity challenges familiar with cable television services. In practical terms, once constructed, SBC could use its new broadband network to offer to its subscribers every single broadcast channel, if it chooses, in analog and digital, including all multicast digital channels. There is no lost opportunity cost for SBC in doing so, because it has essentially unlimited capacity to offer video programming over its new network.

To those who openly question whether broadband video services as defined in this legislation are truly distinct from cable TV, I urge you to recognize the answer is an emphatic "yes!"

One need only look at what the cable industry is doing in response to the investments being made by companies like SBC and Verizon. Our review of current MSO strategies indicates they are preparing to invest billions of dollars into their own networks in an effort to compete with the powerful broadband networks SBC and Verizon are deploying. If SBC and Verizon were simply rolling out cable TV, there would be no need for such investments by cable operators. It is this very type of facilities-based broadband competition that benefits consumers in both quality of service and in pricing.

The BITS Act also includes important Internet Neutrality principles, which prohibit any service provider from denying subscribers access to lawful content available on the Internet, or from connecting devices to their broadband connections. The concept of Internet Neutrality, or "connectivity principles," has long been advocated by the high tech community, and Alcatel fully supports their inclusion into this legislation. As a result, consumers accessing these new high-powered broadband networks will continue to be free to access the Internet-based content of their choosing. As broadband connections to the public Internet continue to increase in bandwidth, consumers will be increasingly empowered to watch video from alternative sources over the Internet if they so choose, or access any other Internet-based substitute for facilities-based broadband services they so desire.

Finally, I would like to take a moment to commend the bill's authors for being sure to protect the rights of municipalities to enter the broadband market when they determine such action is in the best interest of their local communities. As Congressman Boucher knows, Alcatel was the main vendor to a municipal build in Bristol, Virginia, and we continue to work with municipalities in an effort to help them achieve their broadband potential where needed.

Mr. Chairman, Ranking Member Markey, Members of the Subcommittee, thank you again for the opportunity to appear before you today. I look forward to discussing these issues and answering any questions you may have.

Mr. UPTON. Thank you. Mr. Mitchell?

STATEMENT OF PAUL MITCHELL

Mr. MITCHELL. Chairman Upton, and Ranking Member Markey, and members of the subcommittee, I am very pleased today to testify on this far-reaching legislation. When I testified before the subcommittee earlier this year, I focused on how Internet technologies are transforming the consumer experience, especially in the area of broadband platforms delivering video and other advanced services.

This hearing is important because it takes us from the big picture to the critically important details. How will the legislation encourage all players in the Internet world, network operators and content providers alike, to deliver advanced Internet content and services to consumers. In this area, I have two overarching observations.

First, we are concerned that the definitions in the discussion draft could extend regulation to Internet services that have never before been regulated. And second, although the draft includes a section on net neutrality or connectivity principles, and we commend you for that, we are concerned that it does not give adequate assurance to consumers and to Internet content and service providers, that the marketplace, instead of Internet broadband access providers, will decide what content and services succeed or fail on the Internet.

This concept of connectivity principles or net neutrality is not new, and it is the concept that helped fuel the Internet's growth to the benefit of network operators, content providers and the public. It is not broken and doesn't need to be fixed, but it needs to be maintained in the broadband era. As you now, Microsoft pro-

vides a wide array of current and next-generation Internet offerings, including MSN for news and entertainment, Hotmail for free email, and our Live Meeting service which enables businesses to communicate more effectively, and for gamers we have Xbox Live connecting gamers around the world when they play Xbox games.

My group develops the technologies for the delivery of video content. Microsoft TV Foundation Edition is currently being deployed by Comcast in Washington State, and we also developed the IP-based TV platform products that SBC will soon deploy as part of Project Lightspeed, and that Verizon recently launched in Keller, Texas.

Network operators are investing in infrastructure for the broadband future, but Microsoft and other Internet companies, like Amazon.com, eBay, Google, Interactive Corp., and Yahoo, are also investing billions to bring content and services to the public, and telecommunications carriers will be paid some of that money, too. These investments by companies on the ends of the network matter because consumers do not buy technology advances; they buy content and services. Congress should therefore adopt policies that encourage Internet content providers and service providers to bring new and evolving offerings to the public.

In my earlier testimony, I set out goals that should guide any legislation to promote broadband Internet access and content, and they are as follows: the Internet services and products should remain largely unregulated; consumers should be able to access any Internet site and use lawful application, devices or content with broadband connections; and where they are subject to regulation, Internet and video services should be subject to exclusively—to Federal regulation.

So looking at the staff draft, how does it stack up against these goals? First we recognize that what you are trying to do is incredibly difficult. We appreciate the complexity of these issues. But now, since many seem to agree that Internet services should remain largely unregulated, we believe that the definitions in the discussion draft reach broader than necessary. Services and products that ride the top broadband transport networks have never been subject to regulation before. In the definition of BITS, however, the discussion draft could be interpreted to extend regulations to Internet services such as MSN, Hotmail or Yahoo. These services have not been subject to regulation because they do not provide transport connection to consumers. We suggest the subcommittee revise the BITS definition to apply only to entities that provide or resell facilities for accessing content and services on the Internet.

We are also concerned that the definition of VoIP is broader than necessary. Click-to-call features which enable an outgoing call with a mouse click on a web page could be covered by the definition even though they are not substitutes for phone service, and they are really only one-way services. Likewise, Xbox Live could be covered by the definition even though it is not a substitute for telephone service either. We see no reason, and we think consumers see no reason, why Xbox Live or Live Meeting—which is a product to enable virtual office meetings—should have to offer E911 capabilities or shoulder other telephone-like burdens since they only provide voice services in a contained environment. Instead, we suggest that

the VoIP definition should cover only those services that are genuine substitutes for traditional phone service, such as those using phone numbers and offering interconnected services for sending and receiving calls to and from the public switch telephone network.

Finally, the concept of net neutrality or connectivity principles should remain a core value in the broadband Internet world. The consumers' ability to access any lawful content over dialup connections motivated Internet companies to invest, innovate, and compete in the Internet marketplace to the benefit of everyone. These principles give consumers, not network operators, the power to determine which services and products will succeed or fail. These enabling freedoms need to be maintained.

We suggest two important improvements to the draft in this area. First, to "preserved authorities" language is ambiguous or overly broad and needs tightening in order to give the market adequate assurance. And, second, we believe the section on connectivity principles should apply to entities that provide or resell facilities for the transport of information and that provide a subscriber with Internet access or content derived from the Internet. The current definitions and provisions suggest that a company can both provide content from the Internet and not adhere to the connectivity principles. A company, of course, can choose to not include Internet content, in which case we think the connectivity principles should not apply.

Thank you for the opportunity to appear again. You are undertaking important reforms, and I appreciate the opportunity to work with you on this legislation. I am happy to take your questions.

[The prepared statement of Paul Mitchell follows:]

PREPARED STATEMENT OF PAUL MITCHELL, SENIOR DIRECTOR AND CHIEF OF STAFF, MICROSOFT TV DIVISION, MICROSOFT CORPORATION

Chairman Upton, Ranking Member Markey, and Members of the Subcommittee: My name is Paul Mitchell, and I am Senior Director and General Manager for the Microsoft TV Division at Microsoft Corporation. When I testified before the Subcommittee earlier this year, my statement focused on how current Internet technologies are transforming the consumer experience, especially in the area of broadband platforms being used to deliver video and other advanced services using IPTV technology. I explained how IP services and products today enable the delivery of voice, data, and video in new and innovative ways and represent a remarkable change in the history of how consumers communicate and access video and data information.

Today's hearing moves us from the big picture to the critically important details: how proposed legislation would promote or impede broadband deployment and the continued growth of Internet content and services in America. In short, how can legislative levers be used to promote continued investment in Internet content and services and enhance consumer benefit from these tremendous IP services and products.

I will elaborate further but I have two overarching observations: First, the definitions in the bill could extend regulation to Internet services that have never been regulated before. Lest this Congress run the risk of impeding innovation by regulating new services, we suggest that the definitions need to be revisited. Second, the policy of "net neutrality"—or the Connectivity Principles as Microsoft prefers to call them—has served consumers, content providers, and network operators exceedingly well over the past decade. These principles provide the certainty necessary for Internet companies to invest billions of dollars in new and innovative services and products which have added value to the underlying network. It also leaves it to the consumer in the marketplace to determine what services and products will succeed or fail. This policy is one of the fundamental reasons why the Internet has become

what it is today. It does not need to be fixed. It only needs to be maintained in the broadband world.

ROLE OF MICROSOFT IN IP-ENABLED SERVICES.

Microsoft, as a technology provider, plays an important role for network providers and consumers alike as IP-based technologies and features are made available via a great diversity of devices, including PCs, TVs, mobile phones, and handheld devices. In our world, Internet or IP services and products generally mean those services and products that ride atop of or are connected to broadband transport networks. To name just a few examples, our MSN division delivers to computers, wireless phones, and handheld devices a variety of content, including news and entertainment, as well as other services such as downloadable music and video clips. In addition, consumers can sign up for Hotmail, a free email service, and MSN Messenger, a free instant messaging product. Our Live Meeting service enables a group of people in an enterprise environment or other setting to enjoy new options for real-time collaboration. Small groups and enormous groups can simultaneously talk among themselves, and either create or view a Power Point presentation, while the participants never leave their offices. This service increases worker productivity, using Microsoft software, broadband transport connections, and standard telephone connections. Our Xbox Live Service offers another example of how IP technology can be used to improve a consumer experience, in this case gaming, by allowing gamers to compete against each other over the Internet and enhance their gaming experience by talking to each other via a VoIP feature.

My group, Microsoft TV, offers technology solutions to infrastructure and content providers. We developed the Microsoft TV Foundation Edition, which is currently being deployed by Comcast here in the U.S. It brings advanced programming-guide functionality, along with digital video recording (DVR) and a client applications platform to traditional cable networks. We also developed the IP-based TV platform products that SBC will soon deploy and that Verizon recently launched in Keller, Texas. These products enable delivery of a high-quality interactive video content service to consumers via the new facilities being deployed by these traditional telephone companies. The Microsoft TV products can be deployed over a variety of networks including a broadband cable, DSL, or even wireless networks. They will offer new interactive features for consumers, and we think consumers will find they create a very compelling experience.

VoIP—which refers to the delivery of voice over an IP based platform—is an important development on the Internet. Microsoft plays a role in advancing this technology, too. VoIP is a technology that can be used in a variety of ways and presents a definitional challenge for policy makers. VoIP encompasses a great range of capabilities—from a feature in a gaming console such as Xbox, to a computer-to-computer communication, to a full blown VoIP telephone service that is capable of interconnecting with the PSTN and terminating calls to any telephone on the planet.

As this Subcommittee considers the appropriate regulatory treatment for those VoIP services that are offered as a substitute for consumers' traditional phone services—what you might call a VoIP Telephony service—it must ensure that other VoIP offerings or capabilities are not swept inadvertently into the mix. For instance, no one sees the VoIP feature that can be used with our Xbox Live gaming service as a substitute for their landline phone. The Xbox Live VoIP feature does not use telephone numbers, cannot be used in conjunction with a phone, cannot connect to the PSTN; it can only be used if you have an Xbox game console, and users are identified solely by their gamer tags and not their names. In short, the Xbox Live VoIP feature is simply too limited to be of use to consumers as a substitute for their existing telephone service. There is no sound policy basis for regulating Xbox Live like a telephone. No one is going to stop using plain old telephone service because they've become an Xbox Live gamer.

CORE PRINCIPLES TO GUIDE LEGISLATION

The Subcommittee will no doubt hear today about the tremendous investments made by the network operators to promote broadband, and they should be commended for that commitment to the future. But the network operators are not alone in spending billions of dollars to deliver content and services to broadband Internet consumers. Microsoft and other Internet companies, such as Amazon.com, eBay, Google, Interactive Corp., Yahoo! and others, have also made billions of dollars of investments to make broadband Internet content, services, and products available to consumers and businesses, and some of that money is paid directly to telecommunications carriers. In the current calendar year, Microsoft alone is likely to spend over $7 billion on research and development—an amount that has gone up

by an additional billion dollars every several years over the course of our recent history.

This fact is sometimes lost in this debate, but it bears remembering that consumers and businesses buy content and services made available by Internet companies, not just technologies. Consequently, we recommend policies that also encourage Internet content and service companies, as well as technology companies, to make the necessary investments for the broadband Internet future.

When I testified earlier this year, I suggested four goals that should guide any legislative effort to promote broadband use and the future of the Internet. Let me briefly summarize those four goals:

1. Internet-based services and products should remain largely unregulated.

Internet-based services, that is, those services and products that ride atop or connect to the underlying broadband transport services, should remain largely unregulated and not be subject to the Communications Act. The success of the Internet as a tool for consumers and business has been remarkable, and Congress should proceed carefully so it does not inadvertently disturb this accomplishment. The choice of content and services available over the Internet is awe inspiring, and that stands out as a huge accomplishment of this medium. Thus, Congress should ask whether any proposed law or regulation that touches upon Internet services and products is necessary for the public good.

2. Consumers should be able to access any Internet site and use any lawful application or device with a broadband Internet connection—just as they have been able to do in the narrowband world.

This principle, which sometimes is referred to as "net neutrality" or "Connectivity Principles," is really about letting consumers decide, and not network operators, what content and services succeed or fail on the Internet. Connectivity Principles are important as a policy matter because they determine whether consumers in the marketplace drive decisions on innovation and technology, or whether one lets the network operators steer those decisions. We are pleased that the network operators are investing in technology and innovation, and we are proud partners with them in offering content and services to the public. We just think that other companies should continue to be able to offer Internet content and services as well.

In August of this year, the FCC adopted a Policy Statement endorsing the spirit and goals of the Connectivity Principles that several core Internet companies—Amazon.com, eBay, Google, Interactive Corp., Microsoft, Yahoo! and others—have long endorsed. Last week, the FCC voted unanimously to require SBC and Verizon to adhere to them, at least for two years. These principles have defined the Internet since it was launched. Specifically, they are:

- *Freedom to Access Content.* Consumers should have access to their choice of legal content.
- *Freedom to Use Applications.* Consumers should be able to run applications of their choice.
- *Freedom to Attach Personal Devices.* Consumers should be permitted to attach any devices they choose to the connection in their homes.[1]

These hallmarks of consumer expectations have been, and remain, fundamental to the success of the Internet. Those basic features defined consumer and company experiences on the Internet, and we agree with others in the industry that these principles should be carried forward to the Internet broadband future.

3. If policy makers act, they should maintain a "light touch" and act only with respect to those services that give rise to present day policy questions.

In order to avoid constraining the continued growth of IP services, any regulation imposed on IP services should be done with a light touch and only where there is a policy issue that needs to be addressed. For example VOIP is a technology that can be used in a variety of ways. To the extent policy makers are seeking to address a policy objective, they should not focus on all VOIP technologies. Instead they should focus only on those that present a policy question. If policy makers seek to preserve E911, we would suggest that they need not look at implementing E911 in the Xbox Live Service but instead may want to explore those VOIP services that are substitutes for existing telephone service. The principle to maintain is that, to the extent regulation is needed, policy makers should act with the lightest touch

[1] FCC Policy Statement (Aug. 5, 2005); SBC-AT&T and Verizon-MCI Merger Approvals (Oct. 31, 2005).

necessary to solve their policy objective in order to provide as much latitude for the continued innovation and growth of Internet services as possible.

4. Where subject to regulation, Internet and video services should be subject exclusively to Federal jurisdiction.

Congress should protect IP services and all video and broadband companies from conflicting and overlapping State and local regulation. These services are used as an integral part of interstate commerce, they utilize interstate or global networks, and they generally require the transmission of data and information across state lines. As a consequence, where subject to regulation, they should be exclusively within Federal jurisdiction. The FCC has correctly decided that VoIP is an interstate service, and that conclusion should apply to other IP-based services that are subjected to regulatory treatment, as well as to multichannel video programming services more generally.

THE STAFF DISCUSSION DRAFT

To focus our comments on the 70-page draft bill, I will address how the Discussion Draft responds to each of the four goals we see for any legislation. For purposes of today's testimony, I will comment on the weightiest issues. However, I am hoping my Microsoft colleagues will have the opportunity for broader conversations with the staff about narrower changes to the draft.

1. Internet services and products should remain largely unregulated.

The keystone of the draft legislation is found in the definitions, and we are concerned that in some places they sweep broader than necessary. Under current law, services and products that ride atop of or are connected to broadband transport networks have not been subject to regulation, while the underlying transport layer has been regulated for access, interconnection, intercarrier compensation, and other purposes. The Discussion Draft, specifically the definition of BITS, could be interpreted to extend regulations to Internet services, such as MSN, Hotmail, Google Mail, E*Trade, or Yahoo!. These services have never been subject to regulation because they do not involve transport of information and are simply destinations on, or information services made available via, the Internet. In addition, we would suggest that these services do not pose public policy questions such as those that might be posed by a BITs service. As a result, we think they should continue to be unregulated. We urge the Subcommittee to maintain its focus on those entities that provide facilities directly to subscribers that enable the subscriber to transport information to or from the Internet. This formulation would enable important societal regulatory objectives to be met while not extending regulation to new areas of the Internet.

The definition of VoIP also sweeps more broadly than necessary. Some companies that provide online customer service are beginning to make use of so-called "click-to-call" capabilities. For example, you can talk to an operator at LensExpress (a contact lens fulfillment company) via the company's 800 telephone service or via a one-way VoIP based call from your PC to the company's phone bank. If the call is completed via the PSTN, the Discussion Draft would treat that capability as a regulated offering, subject to 911 requirements, USF fees, consumer protection rules, and the like. Yet, that feature is not a substitute for traditional phone service—it is only one-way. It is not the intent of LensExpress to be considered the provider of a phone service. The company only wants to simplify its customer service—and yet that capability arguably would lead to LensExpress being covered by the bill. Over the longer term, because the bill gives the FCC discretion to expand the definition of VoIP service, the bill's provisions could be extended to the Xbox Live voice feature simply because Xbox Live uses an alternative "identification method" to create the voice connection between two Xbox gamers. In the area of VoIP, we urge the legislation apply only to those services that are a substitute for traditional voice service; that have a North American Numbering Plan number; that are interconnected with the PSTN; and that enable a user to send and receive calls to and from the public switched network. The 911 provision of the bill refers to these services as "send-and-receive" services (at Section 204). We recommend that this concept be used to define the class of VoIP services subject to any regulation, lest Congress stymie the development of VoIP capabilities while those capabilities are still emerging.

2. Consumers should be able to access any Internet site and use any lawful application or device with a broadband Internet connection—just as they have been able to do in the narrowband world.

Section 104 of the Discussion Draft addresses the Connectivity Principles. As I stated above, the concept that consumers can access the content and services they want on the Internet without interference or permission from the network operator

is not new. That concept of Connectivity Principles is even older than the Internet itself. In fact, you can argue that without these principles, the Internet would not have evolved as it has. If you consider the Internet a remarkable engine of innovation and growth, then you should credit in part Connectivity Principles for that result. We think that policy—letting consumers decide—has served consumers, content providers, and network operators exceedingly well over the past decade. That policy is not broken. It does not need to be fixed. It only needs to be maintained in the broadband Internet world.

We have joined in the past with other leading Internet companies, including Amazon.com, eBay, Google, Interactive Corp., and Yahoo!, to advocate for the continuation of Connectivity Principles, and we are pleased that the issue has been considered in the Discussion Draft.

Two comments: *First,* the policy embodied in Section 104 on Connectivity Principles is an important one and we commend you for including this concept in the Discussion Draft. However, the provisions in Section 104 need improvement in specific areas. The "preserved authorities" language is uncomfortably ambiguous in some parts and overly broad in others.

Second, and this is the critical issue: What entities need to adhere to Section 104? The version of the Discussion Draft that we have reviewed states that only those persons which provide BITS need to follow the net neutrality requirements. Those entities that provide "Broadband Video Service," which includes "information derived from the Internet," do not have to comply with the net neutrality requirements.

Our view is that if a BVS provider does include Internet content or access, then of course the Section 104 Internet freedoms should apply. Alternatively, if they do not include Internet content or information derived from the Internet, then the Internet freedoms should not apply.

We have heard that part of the reason for excluding BVS providers from Section 104 stems from a concern for spam or viruses. Let me start by saying that we respectfully disagree with that claim as a technical matter. But more importantly, Section 104 contains clear language that enables a network operator to manage a network to ensure network security and reliability. Network management is an important function, but within the terms of Section 104, the network operators have the authority they need to guard against these possible problems. That is not an argument for exempting BVS providers that include Internet content from Section 104.

In short, those entities that provide subscribers with Internet content or information derived from the Internet should adhere to the core principles of net neutrality found in Section 104, and those principles should be clarified to provide consumers and content providers with clear and unambiguous protections.

3. If policy makers act, they should maintain a "light touch" and act only with respect to those services that give rise to present day policy questions.

As I explained above, we are concerned that the definitions of BITS and VOIP in the bill would extend regulation to Internet services that have never been regulated and that should remain unregulated because they ride atop the connection layer or they are not a substitute for traditional phone service. To illustrate: we do not see any reason why Xbox Live, a feature that enables persons playing a game to talk (well, "trash talk" to use the technical term), should have to offer E911 service. Similarly, we do not see why a collaborative work program, that enables users to review a document together and have a conference call to discuss it, should have E911 obligations. Or why Hotmail or MSN should have to register with all 50 states in order to continue to provide service. The changes to the definitions we recommend above would keep the focus on the activity that should be covered to achieve important societal objectives without going too far.

I also want to address briefly the important issue of universal service funding. We recognize that the Discussion Draft refers this issue to the Commission, but we believe that the Commission should use a "connections" approach and not a numbers and other identifiers approach, nor the current system, in order to finance the USF system. A connections approach reduces arbitrage and captures all those persons who use the telecommunications infrastructure, and that is who should be contributing to its support.

4. Where subject to regulation, Internet and other video services should be subject exclusively to Federal jurisdiction.

We think that the current regime of having local and state governments license and regulate video distribution networks needs reform. The current system does not

work for telephone companies trying to enter the business, and it does not work for cable companies already in the business. Both networks should not be subject to local and state regulation but should be covered by a federal regime. The same should apply to all Internet services. These are inherently interstate services that where regulated should be committed to the federal government for exclusive regulation. The Discussion Draft takes some steps in that direction, though it could be improved to ensure that cable companies today get out from under the burden of state and local regulation.

Thank you for the opportunity to provide my views on this critically important legislative proposal. I look forward to your questions and to working with you and your staff going forward on these and other aspects of the draft.

Mr. UPTON. Thank you. Ms. Praisner?

STATEMENT OF MARILYN PRAISNER

Ms. PRAISNER. Thank you.

Mr. UPTON. Oh.

Ms. PRAISNER. Good morning, Chairman Upton, Mr. Markey, Chairman Barton, Mr. Dingell, and members of the committee. I especially want to thank my Congressman, Congressman Wynn, for his kind introduction and comments. I look forward to working—continuing to work with you for our common constituents.

For 3 decades, local governments have used cable franchising authority to achieve nearly universal deployment of broadband advance services, and to protect consumers within our authority. Let there be no mistake, local governments want competition as fast and as much as the market can sustain. While we do not believe that the local franchise process has impeded video competition, we have been prepared to explore different means of streamlining the process. However, we remain skeptical.

Most recently in Texas, Telco's were given what they wanted, fast-track franchising, but Verizon and SBC have to-date offered to provide competitive choice to less than 1 percent of Texas households. Is the Nation giving up current consumer protections and community benefits just to provide choice to a small percentage of the population? We continue to be concerned, as I know you are, about the digital divide. Local governments have come to the table in search of a legislative compromise. We remain clear about our broad parameters: preserve universal service, E911 local emergency alerts, and the Nation's homeland security; protect our property rights and our authority for managing the Nation's rights-of-way. Private, for profit and quasi-permanent occupancy are the most valuable real estate held by local government must be fairly compensated, both through social obligations to the community served and in rental fees. Preserve local governments' right to provide broadband transport and communications services for itself and our constituents. Insure that a local Telco franchise is comparable in terms and conditions to a cable franchise. And provide for a consumer's choice of broadband providers with guaranteed network neutrality.

Local government organization staffs met with your collective counsel to craft a solution. The fruits of those labors was the first staff draft, or BITS I. While not perfect, BITS I was a good start. It reflected a non-partisan dialog with all the parties at the table. It evidenced a respect for and agreement with many of the essential items I cited. We were invited to assist in strengthening those

areas where local government believed the staff draft had missed the mark.

The revised staff draft, BITS II, on the other hand, breaks faith with those deal points. The telephone companies, to us, appear to get everything they asked for including fast-track franchising while avoiding most social obligations. Public safety standards are determined by the industry without proper oversight. Local government is permitted only to enforce what the industry deems important. This is an inappropriate Federal and private industry intrusion into the management of our streets and sidewalks. State and local government is not kept whole.

BITS II limits rights-of-way fees to the recovery of management costs. Broadband video franchise fees are limited to 5 percent of subscriber revenue, not all video service-related revenues. So Telco's not only get out from under franchising, they get subsidized use of local governments' property. As a comparison, the Federal Government charges the full market price to use public spectrum.

Community needs and interests are essentially abandoned. While cable must continue to provide local community needs and interests such as PEG I-Nets, and emergency alerts, the Telcos do not. Consumers lose choice and competition and there is no network neutrality. BITS would not even replicate the rental fees contained in the recent Texas franchising legislation. Needless to say, local government officials across the country are not pleased with the prospect of this bill moving forward as is.

We welcome your introductory comments about the fact that this is a draft. We solicit the support of the bipartisan leadership and every member of this subcommittee for our efforts to protect your and our constituents. This bill, as it is currently worded, breaks faith with the promises we were made in exchange for our support for the national franchise solutions. We were promised consumer choice, fair competition, preservation of our rights-of-way authority, and keeping local governments whole. Without appropriate amendments, BITS II, as I said, breaks faith with those commitments and breaks faith with our consumers.

We stand ready, Mr. Chairman and members of the committee, to continue to negotiate on appropriate legislation prior to markup. We will come back to the table this afternoon. We will stay and work with you through the Christmas recess if necessary to achieve the result that we all want: quality universal service for everyone, all consumers within our jurisdictions. Thank you very much.

[The prepared statement of Hon. Marilyn Praisner follows:]

PREPARED STATEMENT OF HON. MARILYN PRAISNER ON BEHALF OF NATIONAL ASSOCIATION OF TELECOMMUNICATIONS OFFICERS AND ADVISORS, NATIONAL LEAGUE OF CITIES, UNITED STATES CONFERENCE OF MAYORS, NATIONAL ASSOCIATION OF COUNTIES, AND TELECOMMUNITY

I. INTRODUCTION

Good Morning, Chairman Upton, Mr. Markey and Members of the Subcommittee, my name is Marilyn Praisner. I am a member of the County Council of Montgomery County, Maryland. I appear on behalf of the National Association of Telecommunications Officers and Advisors ("NATOA"), the National League of Cities ("NLC"), the

United States Conference of Mayors ("USCM"), the National Association of Counties ("NACo") and TeleCommunity.[1]

II. THE ROLE OF CABLE FRANCHISING

For three decades local governments have used cable franchising authority to achieve nearly universal deployment of broadband advanced services and to protect consumers to the extent we have authority. We also know that only wire line competition reduces cable rates[2] and enhances service.[3] Therefore, let there be no mistake, local governments want competition, as fast and as much as the market and some state laws will sustain.[4]

In an effort to promote competitive cable offerings, in 1992, Congress amended 47 U.S.C. 541(a)(1) to ban the granting of exclusive cable franchises and imposed an affirmative obligation on franchising authorities to "not unreasonably refuse to award an additional competitive franchise . . ."[5] There have been very few cases filed

[1] NLC, USCM and NACO collectively represent the interests of almost every municipal or county government in the U.S.. NATOA's members include telecommunications and cable officers who are on the front lines of communications policy development in hundreds of cities nationwide. TeleCommUnity is an alliance of local governments and their associations which are attempting to refocus attention in Washington on the principles of federalism and comity for local government interests in telecommunications. Councilmember Praisner is chairman of the Telecommunications and Technology Steering Committee for the National Association of Counties; Chair of the Executive Committee for SAFECOM; Chair of TeleCommUnity and Former Vice-Chair of Local State Government Advisory Committee to the FCC.

[2] Please understand that local governments are under plenty of pressure every day to get these agreements in place and not just from the companies seeking to offer service. In separate studies both the FCC and GAO documented in markets where there is a wire-line based competitor to cable that cable rates were, on average, 15% lower. United States General Accounting Office, *Telecommunications Issues in Providing Cable and Satellite Television Service,* Report to the Subcommittee on Antitrust, Competition, and Business and Consumer Rights, Committee on the Judiciary, U.S. Senate, at 9, GAO-03-130 (2002)("GAO 2002 Study"), *available at* www.gao.gov/cgi-bin/getrpt?GAO-03-130; *In re Statistical Report on Average Rates for Basic Service, Cable Programming Service, and Equipment,* Report On Cable Industry Prices, MM Docket No. 92-266, 17 FCC Rcd 6301, Table 6 (2002)("*2002 Cost Report*").

[3] For over thirty years local governments have granted incumbent cable operators and competitive broadband providers non-exclusive franchises to use public property to provide cable service and non-cable services. Grants of exclusive franchises, which were rare, were prohibited by the 1992 Cable Act. 47 U.S.C. § 541(a)(1). New entrants and incumbent cable operators are using new and upgraded systems to offer bundled combinations of video programming, Internet access, and telephone service to increase per subscriber revenues.

[4] Many states have level playing field statutes, and even more cable franchises contain these provisions as contractual obligations on the local government. So when a new provider comes in and seeks a competitive cable franchise, there is not much to negotiate about. If the new competitor is seriously committed to providing as high a quality of service as the incumbent, the franchise negotiations will be neither complicated nor unreasonably time consuming. It is also important to recognize that every negotiation has two parties at the table. Some new entrants have proposed franchise agreements that violate the current state or federal law and open local franchise authorities to liability for unfair treatment of the incumbent cable operator vis-à-vis new providers. Some also seek waiver of police powers as a standard term of their agreement. Local government can no more waive its police powers to a private entity than the federal government can waive the constitutional rights its citizens.

[5] *See* Subsec. (a)(1). Pub. L. 102-385, § 7(a)(1))

pursuant to Section 621(a)[6], and even fewer of these claims have found fault with local franchise authority grants or refusals.[7]

III. IS THE 4TH TIME THE CHARM?

Much like you, local governments have been gravely disappointed with the telephone industry's past promises-made versus reality-delivered. Three times before, in 1984, 1992, 1996, the telephone industry promised Congress it would enter the video services business. Each time Congress amended the laws to permit the entry. Now they ask again.

While local government will never agree that the local franchise process has impeded video competition, we are prepared to explore different means of streamlining the process.[8] We are, however, skeptical.

---

[6] As of October 26, 2005, an electronic search of the Westlaw system reveals 13 published opinions which cite Section 541(a)(1). The 13 published opinions represent 11 different controversies. Two of the controversies have trial court and appellate court opinions. Of the 11 different cases;

• Two were brought against the US government acting as a cable operators on military bases (*Americable International, Inc v. Dept of Navy,* 129 F.3d 1271, (D.C. Cir. 1998) (Navy's refusal to grant a SMATV contract, does not rise to a § 541(a)(1) violation.); *Cox Cable Comm., Inc. v. United States,* 992 F.2d 1178 (11th Cir.1993) (11th Circuit found a violation when Robins Air Force Base granted an exclusive cable franchise to Centerville Telecable, the winner of a competitive bidding process.);

• Four of the cases saw local government citing to the section as a justification for their actions. Twice local government has unsuccessfully cited Section 541(a)(1) as means to defeat exclusive franchises that pre-dated the Cable Act. (*James Cable Partners v. City of Jamestown,* 43 F. 3d 277 (6th Cir. 1995); *Service Electric Cablevision v. City of Hazleton* 2005 WL 2020452 (M.D.Pa. 2005). Once it was used to defend against a claim of favoring a competitor over an incumbent (*Cable TV Fund v. City of Naperville and Ameritech New Media, Inc.,* 1997 WL 280692 (N.D. Ill., 1997) and once to demonstrate that the cable franchising process did afford due process standards. *Liberty Cable v. The City of New York,* 893 F.Supp 191 (S.D. New York, 1995)

• One case was brought against a private developer.

While there are not a great many common threads in the Section 541(a)(1) cases, there are two absolutes.

A party must ask for a franchise before an LFA can be found to have unreasonably denied the grant of a second franchise. "A natural reading of § 541 requires that Houlton Cable apply for a second franchise before it can ask this Court to review whether it is reasonable to refuse one." *NEPSK, Inc. v. Town of Houlton,* 167 F.Supp.2d 98, 102 (D.Me 2001) *See also NEPSK, Inc. v. Town of Houlton* 283 F. 3d 1 (1st Cir., 2002); The requesting party must be asking for a new franchise and not a renewal. In *I-Star Communications Corp. v. City of East Cleveland,* 885 F.Supp. 1035 (N.D.Ohio 1995). the District Court for the Northern District of Ohio held that I-Star did not state a claim for relief pursuant to § 541(a)(1) because the case concerned the City's efforts to revoke I-Star's existing franchise, not a denial of an application for a "second competitive franchise."

[7] In thirteen years, only twice has a local government LFA been found to violate or potentially violate Section 541(a)(1). In one case the violation was a matter of semantics and in the other the finding was procedural. In *Qwest v. Boulder* 151 F.Supp.2d 1236 (D. Colorado, 2001) Qwest was providing cable programming in Boulder through a revocable permit granted by the city. In addition to Qwest, TCI was also providing cable in the city by means of a revocable permit, while Wild Open West, a third provider, was offering cable in the city by means of a franchise. Testimony was presented to explain that Qwest and TCI operated under a revocable permit rather than a franchise as the city's charter required a vote of populace for the issuance of a franchise. Wishing to avoid the expense of such an election, Qwest sued arguing that the election provision was preempted by § 541(a)(1) and the Court agreed. In *Classic Communications Inc. v, Rural Telephone Co,* 956 F.Supp. 896 (D. Kansas, 1996) Telecommunications company and its telephone and cable television subsidiaries brought suit for refusal to grant cable television franchises to cable television subsidiary. The Kansas District court denied the cities' motion to dismiss stating: whether the Cities' refusal was unreasonable is not an issue at this stage of the litigation.

[8] **Franchising is not a Barrier to Competition**

The concept of franchising is to manage and facilitate in an orderly and timely fashion the use of property. For local governments, this is true regardless of whether we are franchising for the provision of gas or electric service, or whether we are providing for multiple competing communications services—all of which use public property. As the franchisor—we have a fiduciary responsibility that we take seriously, and for which we are held accountable.

Franchising is a National Framework with an Essential Local Component—Franchising is essentially a light touch national regulatory framework with local implementation. The 1992 Cable Act authorizes local governments to negotiate for a relatively limited range of obligations that are imposed upon cable operators. Virtually none of these obligations are mandatory. Each one is subject to decision-making at a local level.

Local Franchising is Comparatively Efficient, and Must Be Fair to Protect All Competitors—Franchising is not intended to be complex or time-consuming, but fair to incumbent, competitor

Continued

Most recently in Texas, telcos were given what they wanted, fast track franchises. But Verizon and SBC, months after the law was put on the books, have offered to provide competitive choice to less than one percent of Texas households. Is the nation giving up the consumer protections and community benefits in the current franchising system just to provide choice to one percent of the population?

IV. THE SOLUTION ON THE TABLE

Local government came to the table in search of a legislative compromise and we remain clear about our broad parameters:

1. Universal service, E-911, local emergency alerts and the nation's homeland security in an IP era must be preserved.
2. State and local governments' property rights and our authority for managing the nation's rights-of-way must be kept whole. Private, for-profit, and quasi-permanent occupancy of the most valuable real estate held by government must be fairly compensated—both through social obligations to the community served and in rental fees.
3. Local governments must have the right to provide broadband transport and communications services to themselves and to their constituents to further important community interests.
4. The local telephone company franchise should be comparable to the terms and conditions applied to their cable competitors.
5. Consumers need choice of broadband providers with guaranteed network neutrality. The owner of the broadband pipe should never discriminate among service providers nor limit the consumer's access to those services.

IV. BITS I

The national local government organizations directed our staffs to meet with your collective counsel to craft a solution. The fruit of those labors was the first staff draft, or "BITS I."

BITS I, while not perfect, was a good start.[9] It reflected a non-partisan dialogue with all the impacted parties (federal, state, and local governments, industry and consumers) at the table. It evidenced a respect for and agreement with many of the essential elements outlined on the above issues. And, we were invited to assist in strengthening those areas where local government believed the staff had missed the mark.

V. BITS II

The revised staff draft, BITS II, on the other hand, breaks faith with those deal points. Though it provides for local government provisioning of broadband transport and services and makes an effort to preserve narrow-band universal service, E911 and homeland security in the IP era; the draft is seriously flawed. In this draft the telephone companies get everything they have asked for including fast track franchising, while avoiding most social obligations "and everyone else loses.

1. Public safety standards are determined by the industry without proper oversight. Local government is permitted only to enforce what the industry deems impor-

---

and consumers. In some communities, operators bring proposed agreements to the government based on either the existing incumbent's agreement or a request for proposals, and with little negotiation at all an agreement can be adopted. In other communities, where the elected officials have reason to do so, a community needs assessment is conducted to ascertain exactly what an acceptable proposal should include. Once that determination is made, it's up to the operator to demonstrate that they can provide the services needed over the course of the agreement.

The Current Framework Safeguards Against Abuse and Protects Competition—The current framework ensures that all competitors face the same obligations and receive the same benefits, ensuring a fair playing field. Federal safeguards protect against abuse. Local government is generally prohibited from requiring a provider to use any particular technology or infrastructure such as demanding fiber or coaxial cable. They can require that certain minimum technical standards be adhered to and that systems are installed in a safe and efficient manner. Local government ensures compliance with the National Electric Safety Code to protect against threat of electrocution or other property damage. Local rules can also require that signal quality be up to federal standards, and that systems are maintained to provide subscribers with state of the art transmissions. Similarly, it is local government that inspects the physical plant and ensures compliance on all aspects of operations. We work closely with our federal partners and cable operators to ensure that cable signal leaks are quickly repaired before there is disruption or interference with air traffic safety or with other public safety uses of spectrum.

[9] A copy of the memo local government shared with the bi-partisan staff is attached hereto as Appendix A. The memo reflects that there was much to embrace in BITS I and most of local government's comments sought to perfect the bill, not kill the legislation.

tant. This is a ridiculous intrusion by the federal government and the private industry into the management of local streets and sidewalks.

2. State and local government is not kept whole. BITS II limits rights-of-ways fees to the recovery of management costs. And Broadband Video franchise fees are limited to 5% of subscriber revenue, not 5% of all video service related revenues which is standard today. In other words, Telcos not only get out from under franchising, they get subsidized use of local government's property. As a comparison, the federal government charges a full market price to use public spectrum. Again, by these provisions, Congress clearly expresses favoritism towards one segment of the industry by granting subsidized rights to access public property, and local government revenues are severely curtailed in the process.
3. Community needs and interests are essentially abandoned. While cable must continue to support local community needs and interests such as PEG I-Nets and emergency alerts, the telcos do not. This results in governmental discrimination favoring one class of video provider and a reduction in community benefits.
4. Consumers lose choice and competition. Broadband competitors can buyout their competition. There is no network neutrality.

Collectively, these changes break faith with the promises of the Committee leadership and the promises of the industry. BITS II would not even replicate the rental fees contained in the recent Texas franchising legislation. We can only assume that Texas members want to preserve the compromise the industry agreed to not less than two months ago in Austin.

VII. HISTORICAL AND CURRENT ROLE OF SOCIAL OBLIGATIONS

Finally, I welcome this opportunity to discuss with you the important social obligations inherent in current video regulation, and to explain why these core functions must be preserved, no matter the technology used to provide them. These include the allocation of capacity for the provision of public, education and government access channels, prohibitions on economic redlining, and a basic obligation that local government evaluates and the provider meets the needs of the community, including public safety needs.

PEG Channels

Historically and today, locally produced video programming performs an important civic function by providing essential local news and information. Under the existing law, local government can require that a certain amount of cable system capacity and financial support for that capacity be set aside for the local community's use. This capacity is most often used in the form of channels carried on the cable system and are referred to as PEG for public, educational and governmental channels. Once the local franchise authority has established the required number of channels and amount of financial support required to meet community needs, they then determine the nature of the use, which may be mixed between any of the three categories. Public channels are set aside for the public and are most often run by a free-standing non-profit entity. Educational channels are typically reserved for and are managed by various educational institutions. Government channels allow citizens to view city and county council meetings, and watch a wide variety of programming about their local community that would otherwise never be offered on commercial or public television. Whether it is video coverage of the governmental meetings, information about government services or special programs, school lunch menus, homework assignments or classroom instruction, the video programming used to disseminate this information allows all of us to better serve and interact with our constituents. Government continues to make innovative uses of this programming capacity as new interactive technology allows even better information to be available to our constituents.

Many of you and your peers use this vital resource as a means to report back and to interact with your constituents at home. Local and state officials also use this important medium, and we want to ensure that it continues to be available now and in the future.

It may be possible that through deliberative processes such as this hearing, we will identify new technological opportunities to assist us in our outreach to our citizens, but I suggest to the Committee today that these public interest obligations continue to serve an important purpose and must be preserved, regardless of the technology that allows us to make the programming available. I hope that you'll join with me in calling for the continuation of such opportunities in the new technologies that are evolving today. Certainly I should hope that you would not follow the tantalizing concept of reducing obligations on providers without careful consideration.

Economic Redlining

One of the primary interests of local government is to ensure that services provided over the cable system are made available to all residential subscribers in a reasonable period of time. These franchise obligations are minimal in light of the significant economic benefits that inure to these businesses making private use of public property. While there may be those who find this provision unreasonable—we find it to be essential. Those who are least likely to be served, as a result of their economic status, are those who we need most to protect. This deployment helps to ensure that our citizens, young and old alike, are provided the best opportunities to enjoy the highest quality of life—regardless of income. The capacity that broadband deployment offers to our communities is the ability of an urban teen to become enriched by distance education opportunities that until recently couldn't possibly capture and maintain the interest of a teen (much less many adults). And, that's just the beginning—the possibilities are endless, as is the creativity of those in local government on making the most they can with the least they have.

Public Safety & Community Needs

Local leaders often focus on the needs of their first responders when evaluating community needs. The current law provides that local governments may require the development of institutional networks as part of the grant of a franchise. This network is specifically for the purpose of serving non-residential areas such as government facilities including police, fire, schools, libraries and other government buildings. This infrastructure is typically designed to use state of art technology for data, voice, video and other advanced communications services. It has proven effective not only for day to day training and operations—but essential in emergencies, including the events of September 11, 2001.

For example, the City of New York uses an INET for distance learning among city educational institutions, for city-wide computer network connectivity, for criminal justice applications (video arraignments), for employee training including first responder training, and for ensuring redundant intelligent communications capabilities for all of its police, fire and first responder needs. This network is constantly being improved upon, but functioned in many important capacities during the losses suffered on September 11, 2001. This network not only offers capacity for the city all year round, but redundancy in times of an emergency.

Again, many Members of Congress live in communities that have required the deployment of these services, and are planning and using this infrastructure and the services to protect and serve the needs of their citizens. For instance the communities of Palo Alto, California, Marquette, Michigan, Laredo, Texas and Fairfax County, Virginia are all examples where the local government has determined that use of an institutional network is in the best interests of their community.

VIII. CONCLUSION

Local government officials across the country are going to be very unhappy if this bill moves forward. We solicit the support of the bi-partisan leadership and every member of this Subcommittee for our efforts to protect your and our constituents. We also appeal to your sense of fair play. This bill breaks faith with the promises we were made in exchange for our support of a solution. We were promised consumer choice, fair competition and preservation of our rights-of-way authority, and that local governments would be kept whole. BITS II reneges on all three promises. Any Member who supports BITS II without amendment will break faith with local government and consumers.

Local government is ready to continue to negotiations on appropriate legislation prior to markup. We will come back to the table this afternoon and work through the Christmas break, if necessary, to achieve such a result.

Thank you. I look forward to answering any questions you may have

APPENDIX A

Local Government Initial Comments to the House Staff Draft of 9-15-05

Local Governments support the following:

- Local government determines public access channel (PEG) obligations and bonding requirements and Video provider must satisfy local authority before offering service.
- All new technology providers must pay franchise fees.
- Subjecting the new class of "Broadband Video Service" and services integrated with it to a franchise fee.

- The definition of gross revenue is an acceptable compromise.
- The draft takes a sound approach to right of way damage or facilities abandonment, but some management changes are needed.
- Municipal broadband provision is sound, provided no cross subsidization language is added.
- Concepts of network neutrality/open access.

Local Governments have the following concerns:

- The FCC is the wrong place for right-of-way and franchise fee dispute resolution. The FCC lacks capacity and expertise. The present court enforced mechanism works and is appropriate.
- To remain whole and to protect public safety networks, local governments require compensation for current in-kind services received via franchising in addition to the current franchise fee.
- Local government must be able to protect its citizens' interests and its rights under local, state, and federal law through effective enforcement provisions. For example, local government must be able to conduct audits and collect documents appropriate documentation to monitor operator compliance.
- The draft should include clearer and broader savings clauses, including clauses that more precisely protect local authority with respect to: taxes, zoning with respect to cell towers, damages immunity for actions related to PEG/right of way, and state and local consumer protection laws.
- While local government understands the concern, and is willing to help develop streamlined procedures for franchising, local government has strong reservations about any mechanism whereby the federal government grants access to locally owned property.
- Public access (PEG) capacity and use must evolve and advance with advances in commercial services and technology. Providers must be obligated to interconnect to receive PEG programming.
- While generally a strong proposal, a few adjustments are necessary to protect local government's ability manage the right-of-way such as allocation of relocation and management costs. Companies may not create their own safeguards to protect the public health, safety, and welfare.
- Local government believes that competition is important for all users. Congress should mandate non-discrimination based upon income, race, ethnicity, etc. Local elected leaders are in the best position to make decisions about build out obligations.

Mr. UPTON. Thank you. Mr. Putala?

STATEMENT OF CHRISTOPHER PUTALA

Mr. PUTALA. Thank you. Thank you, Mr. Chairman Upton, Chairman Barton——

Mr. UPTON. Can you—you got to hit that button.

Mr. PUTALA. Is that better?

Mr. UPTON. That is better.

Mr. PUTALA. Thank you, Chairman Upton, Chairman Barton, Ranking Member Markey, members of the subcommittee. EarthLink is the Nation's largest independent Internet service provider, and we appreciate the opportunity to testify today.

At the outset, let me say that the staff discussion draft takes, in our view, steps toward an appropriate regulatory framework for broadband communications. However, the staff—the draft also takes some half-steps that should be improved, as well as some missteps that should be reversed.

EarthLink's comments on the discussion draft focus on three key goals. Goal one, keeping the consumer's ability to choose his or her service providers foremost in mind, the draft wisely includes provisions to ensure that broadband transmission providers do not interfere with the customer's lawful use of the Internet—the net neutrality provisions. The threat of Internet discrimination is a real and present danger to consumers. A recent report from CIBC, a re-

spected investment bank, goes so far as recommending to Telco and cable companies, a top-10 list of anti-competitive network discrimination techniques. Given that threat, we believe the current draft should be improved.

For example, making it clearer that while different speeds and different pricing of Internet service can be offered to all consumers to accomplish network management, but once a consumer has purchased the right to use the express lane, they should be able to use that express lane for all applications, not just those applications their BITS provider would prefer. Network owners must not be allowed to favor their own customers, their own applications, once folks are in their express lanes.

Another way to ensure that the consumer is in charge is by adding a provision for stand alone broadband, known in less-polite circles as naked DSL. Too many consumers are forced to buy regular voice phone service when they buy DSL service. Why should a consumer who wants to use VoIP instead of traditional phone service have to spend $25 to $50 a month for phone service he doesn't want in order to get broadband service. The staff draft should be modified by adding a new provision to guarantee that consumers have the option of purchasing standalone broadband without being forced to buy regular phone service.

I agree with Mr. Ellis about following the wireless success. Over the past decade, this committee has time and again gotten it right when facing issues relating to the wireless industry. 10 years ago, wireless was a duopoly, but this committee took actions to encourage new facilities, protect interconnection rights, and give the wireless industry reasonable time to comply with a host of government mandates. We were awarded with a vibrant, competitive wireless marketplace. We are pleased to know that the staff draft takes an important step to encourage new broadband facilities by eliminating current and future prohibitions on municipal broadband initiatives. EarthLink is proud to be leading the effort to unwire America's cities with WiFi technology, delivering the Internet wirelessly and affordably.

EarthLink is already partnered with the city of Philadelphia to build, own and manage, at our cost, a wireless network to provide broadband to the entire 135 square miles of Philadelphia. This will be the Nation's largest municipal WiFi network, powered by the equivalent of just 600 light bulbs, 135 square miles will be lit by the promise of affordable broadband access.

The wireless example also highlights an important misstep in the staff draft relating to the lack of protections guaranteeing interconnection and traffic exchange. 10 years ago, wireless faced the same situation Internet voice traffic does today: relatively few folks on a wireless network trying to get connected to lots of folks on the incumbent telephone companies' network. Recognizing their advantage, the phone companies often required wireless to pay for calls into their network and for calls from their network. In other words, head I win, tails you lose, for the incumbent because wireless had no negotiating leverage.

Fortunately, Congress took significant steps in 1993 and 1996 that recognized that given such a disproportion of market power, a small network was never going to have even the chance to be-

come a big member. Unfortunately, the staff draft does too little to address this practical problem. While the requirement to interconnect is included, there is no meaningful enforcement. FCC arbitration is possible, but with no criteria or standards to define anticompetitive behavior. We are aware that the staff draft has a major shortfall in this respect and we urge that it be corrected.

Let me close with the third goal, a plea for a regulatory timeout. Over the past 3 years, Telecom rules have been in a constant state of flux. The staff draft remains largely silent on the old debate of the past decade. I ask the subcommittee to take a modest additional step, a step to an affirmative timeout. The FCC has identified a clear investment-based path to full deregulation. If an ILEC builds fiber to even 500 feet of a customer's home or business, they are entirely free of any loop unbundling obligations.

Congress should call a lengthy timeout against further piecemeal litigation over loop unbundling, allowing EarthLink and others to make investment decisions based on what is happening in the marketplace, not what is happening in regulator's offices.

Thank you for the opportunity to testify. We look forward to your questions.

[The prepared statement of Christopher Putala follows:]

TESTIMONY OF CHRIS PUTALA
EXECUTIVE VICE PRESIDENT, PUBLIC POLICY
EARTHLINK, Inc.
Before The
SUBCOMMITTEE ON TELECOMMUNICATIONS & THE INTERNET
Of The
COMMITTEE ON ENERGY & COMMERCE
U.S. HOUSE OF REPRESENTATIVES
November 9, 2005

Mr. Chairman, Ranking Member Markey, Members of the Subcommittee, thank you for inviting me to speak to you regarding your efforts to draft a new charter for broadband, Voice over IP and Video services to truly unlock the potential of broadband for American businesses and consumers.

For ten years, EarthLink has been on the cutting edge, delivering first dial-up, then broadband and now VoIP, wireless voice and municipal wireless Internet services to the American public. Over the past ten years, we've seen the Internet grow from the specialized province of a few tech-savvy early adopters to an integral part of American work and family life. And we've seen – and helped – millions of Americans move toward broadband services and capabilities that were not possible with dial-up services.

Our approach has been to deliver our customers the services they want: we revolve around our customers. And we've been successful. Over the past three years, EarthLink has won numerous awards for customer satisfaction in both broadband and

dial-up services. We now deliver to our customers a full-range of broadband services and applications, including Internet access, Voice over IP, and wireless services. We offer our customers a wide range of enhanced offerings, including pop-up, spam and spyware blockers, anti-virus protection, and parental controls. And we are excited to be working with the City of Philadelphia to deploy a new wi-fi network providing the residents of that city an alternative to the cable – telephone company high-speed wireline access duopoly.

At the outset, I'd like to commend the Committee and Subcommittee, and particularly its staff, for all the hard work you have put in so far. The staff discussion draft takes many key steps to provide an appropriate regulatory framework for broadband communications. But, the draft also takes some half-steps that should be improved and some missteps that should be reversed.

As you consider further how to shape the legislation that has moved forward, I would like to leave you with three key thoughts:

1. **Keep the consumer's ability to choose his or her service providers foremost in mind;**
2. **Follow the successful lessons learned in the overwhelming growth of wireless communications over the past ten years; and**
3. **Stabilize the regulatory environment to permit all market participants to invest in delivering services to consumers.**

I. Empowering Consumer Decisions

Consumers are, of course, whom we all seek to serve. Laws and rules in the telecommunications sector are the most successful when they allow the market to deliver new and innovative products to consumers and empower consumers to freely choose the products and services that best suit their needs.

To make sure that consumers can freely exercise choice in the market, the staff has wisely included provisions to ensure that broadband transmission providers do not block or interfere with a consumer's attempt to use any lawful content, application or service available over the Internet. Moreover, while a broadband network operator may offer its own high quality services and manage network and routing to do so, it cannot unreasonably impair or interfere with access to or use of other lawful Internet content, applications or services while doing so. These basic consumer empowerment principles will ensure that consumers can continue to have access to the services they want in the broadband marketplace.

I have three suggestions with respect to these provisions. First, these provisions (and indeed all the provisions with respect to BITS services and providers) should apply to service providers that purchase and resell BITS to subscribers.[1] For example, EarthLink purchases BITS from such partners as Covad, and EarthLink should be subject to the rights and responsibilities of a BITS provider when it sells a broadband Internet access service to consumers.

[1] As currently drafted in the November 3, 2005 Staff Draft, the definition of BITS is limited to a person that providers or offers to provide BITS, either directly or through an affiliate, "over facilities the service provider or its affiliate owns or controls." This could be expanded to include resold services by modifying the language to read "over facilities <u>or services</u> the service provider or its affiliate owns or controls<u>, or purchases for resale</u>."

Second, the Subcommittee should make clear that whenever a BITS provider exercises its "preserved authorities" in subsection 104(b) of the November 3, 2005 Staff Draft, it cannot do so in a manner that favors the content or applications provided by itself or its affiliates. For example, the draft permits a BITS provider to offer service plans that involve varied and reasonable bandwidth or network capacity limitations, provided there is advance notice to subscribers. This is reasonable so long as the subscriber can use her bandwidth or network capacity as she sees fit, within the limitations. However, the Subcommittee should make clear what I believe is the intent – that this provision does not permit, for example, a BITS provider to provide a higher capacity service only if the subscriber uses the BITS provider's content or application.[2] Moreover, if a BITS provider makes a network management decision (such as to prefer voice packets over video packets), that should apply to all voice packets, not just the BITS provider's voice packets. Put another way, if a customer decides to purchase the right to use the "fast lane" service, it should be able to use the "fast lane" for all her applications and content, not just the applications and content that the BITS provider would prefer.

Third, these provisions should be applied to all broadband Internet transmission services, even when those services may be packaged with other voice or video services. To the extent that the definition of "broadband video service" is meant to permit the offering of broadband Internet access or VoIP services without complying with the

[2] The same is true with respect to value-added consumer protection services, measures to protect network security and reliability, and network utilization and routing management to permit the offering or carriage of broadband video services or other enhanced quality services. Such favoritism should never be considered "reasonable."

requirements applicable to those services (including, for example, E911 for VoIP),[3] that approach would provide regulatory preference, not regulatory parity, to the broadband video provider.

In another provision that promotes consumer choice, the staff draft also wisely includes provisions that ensure that consumers can port their telephone numbers to VoIP providers, and that VoIP service providers can obtain North American Numbering Plan telephone numbers to offer their services. This will help consumers switch to (or away from) VoIP service providers, without interference from a service provider that may be dismayed at losing a customer.[4]

Along these same lines, the staff draft would be improved if it also precluded broadband service providers (i.e., in the language of the staff draft, BITS providers) from requiring consumers who want to purchase broadband Internet access to also purchase the BITS provider's voice services. As the Committee is well aware, in many instances, consumers who want to purchase DSL service must also purchase voice telephone service. Those types of requirements frustrate consumer choice by precluding consumers from buying DSL service from a BITS provider, while using another provider's VoIP service in lieu of the BITS provider's traditional circuit-switched (or VoIP) voice service. As conditions of their megamergers, the nation's two largest ILEC BITS providers, Verizon and SBC, have just committed to offer such stand-alone or "naked" DSL services to 80% of their customers for two years. Qwest currently offers stand-alone

[3] *See* § 2(5)(B) of the November 3, 2005 Staff Draft.

[4] In addition, the Committee should slightly broaden the definition of VOIP service. Rather than limiting VOIP service to a voice communications service provided over BITS, *see* Staff Draft § 2(21)(A), the Committee should define VoIP service to include any voice communications service that does not use circuit switching on the VoIP subscriber's end of the call. That would avoid artificial distinctions between services that convert a voice signal into IP on the customer's premises, as opposed to in a NID, a network node, or in a softswitch. Such a definition would not sweep in "dial-up" services in which a VoIP user calls through the circuit-switched PSTN to reach a VoIP platform.

Internet access services. All consumers should be given this choice, unfettered by tying arrangements designed to protect legacy businesses.

II. Following the Successful Lessons from Wireless.

Over the past ten years, we have seen an explosive growth in wireless services. In 1994, there were fewer than 20 million wireless subscribers; today, there are nearly 200 million – a ten-fold increase. As you study what steps to take with respect to broadband, the history of wireless and wireless regulation since 1994 provides some very clear and useful lessons:

1. **A facilities-based duopoly is not enough to drive competition and innovation to the benefit of consumers.**
2. **Expanding the number of facilities-based alternatives is critical.**
3. **In addition to limiting state rate and entry regulation, fair interconnection with incumbent networks must be safeguarded and ensured.**
4. **New services need adequate time to implement new mandates, without threats of service shut-offs.**

A. Facilities-Based Duopoly is not Sufficient.

The history of wireless cautions strongly against relying on a facilities-based duopoly to deliver strong competitive choices and marketplace innovation to consumers. From 1984 until the first broadband PCS services began to be offered in 1995, wireless services were offered in a legally-sanctioned duopoly. Per-minute prices for wireless service peaked in 1993, the same year Congress voted to authorize new wireless entry

through spectrum auctions.[5] Duopoly created wireless services that were priced for only a few, which relegated wireless to a niche market.

On the other hand, since the third and fourth (and more) wireless competitors entered the market in 1995-96, competition in the wireless market has exploded. As stated above, wireless subscribers have soared from only 20 million in 1994 to nearly 200 million as of June 2005. In 1993, wireless service averaged 58 cents per minute,[6] but by the end of 2004 was averaging 9 cents per minute – a nearly 85 % drop.[7]

The same market performance can be expected in broadband as well. If there are only two facilities-based broadband providers, competition will stagnate and consumers will not reap the full benefits of the broadband revolution. Broadband today is characterized by a cable-telco duopoly, with cable modem service and DSL together accounting for 97.5% of all residential and small business broadband connections. And of these services, cable companies and incumbent LECs each control over 95% of these respective offerings. However, if a stable duopoly is not permitted to develop, the market will keep competitive pressure on all providers and force the two dominant facilities-based providers, cable and ILEC DSL, along with all other market participants, to continue to innovate to the benefit of consumers. For this reason, the bill should clarify that other facilities-based competitors (including those that use their own switches and routers) are vital if consumers are to reap competition's rewards.

---

[5] *See* http://wireless.fcc.gov/statements/010620cmrsSugrue_slides.ppt
[6] *Id.*
[7] *Implementation of Section 6002(b) of the Omnibus Budget Reconciliation Act of 1993; Annual Report and Analysis of Competitive Market Conditions with Respect to Commercial Mobile Services*, Tenth Report, WT Docket No. 05-71, FCC 05-173, at ¶ 158 (rel. September 30, 2005).

B. Expanding Facilities-Based Alternatives is Critical.

In wireless, it was Congress, through the enactment of the Omnibus Budget Reconciliation Act of 1993, which made additional spectrum available through the then-innovative mechanism of spectrum auctions in order to allow new competitors to emerge.

This Subcommittee now has the same opportunity with respect to broadband. In its draft, the staff takes a major step towards ensuring the development of additional broadband platforms by precluding states and local governments from prohibiting municipal or other government-owned entities from providing broadband services. As a major participant in the development of municipal broadband services, EarthLink commends the staff for its inclusion of this provision. This is one way to help ensure that competitive choices continue to develop.

[Please refer to Appendix for details on EarthLink's Wireless Philadelphia broadband services.]

And this Committee is separately considering, in the context of digital television legislation, how to expedite the digital transition so that additional spectrum would become available not just for public safety, but also for licensed and unlicensed wireless broadband services.

But more can be done, particularly during the interim period between now and whenever a third or fourth broadband transmission facility (whether wired or wireless) clearly emerges and becomes widely available to consumers. Today, EarthLink, together with its partners, uses unbundled loops leased from the ILEC to provide alternative broadband services. These UNE loop-based offerings are themselves independent, facilities-based offerings, as EarthLink and its partners provide the electronics and IP

features and functions to make these services distinctive and innovative. As discussed further below, the Committee should ensure that these UNE loops continue to be available, on the same terms and conditions as they are available today, to permit consumers to have these additional broadband service choices. That would ensure that consumers are not subject to a facilities-based duopoly while other modes of broadband transmission develop.

Of course, in order to ensure that a sufficient number of competitive alternatives develop to prevent a continued broadband duopoly, it is also important to prevent the dominant cable and incumbent telephone companies from acquiring one another within the same territory. That is why Section 652 of the Communications Act today precludes cable operators and local exchange carriers from acquiring one another within their service territories.[8] The same prohibitions should still apply even if the cable operator reclassifies itself as a "broadband video services provider" or the incumbent LEC classifies itself entirely as a BITS or VoIP provider, and the bill should make clear that cable companies and ILECs cannot "end run" section 652 by reclassifying themselves under this bill.

[8] *See* 47 U.S.C. § 572.

C. Ensuring Fair Interconnection and Traffic Exchange.

For wireless services, in addition to Congress' 1993 preemption of state rate and entry regulation, one of the keys to growth and expansion was the 1996 Act's guarantees of fair terms and conditions for interconnection.

Prior to the 1996 Act, wireless faced extremely unbalanced terms when it exchanged traffic with incumbent local telephone companies. In some cases, wireless carriers paid the incumbent telephone company for every minute of traffic that the wireless carrier received from the incumbent LEC, and it also paid the incumbent LEC for every minute of traffic that originated from a wireless customer but terminated to a telephone number on the traditional public switched network.[9] These arrangements were hardly surprising. In 1996, wireless carriers were much smaller than the incumbent LECs, and had many fewer subscribers. Few incumbent LEC subscribers would therefore be inconvenienced if they were unable to call out to, or receive calls from, a wireless customer. However, the wireless carriers were dependent upon the incumbent LECs to handle all but the then very small fraction of calls placed between wireless consumers. The incumbent LECs were thereby able to use their market power over interconnection to extract fees from wireless carriers, regardless of whether traffic originated from the incumbent LEC's wireline customer or from the wireless carrier's

[9] *Implementation of the Local Competition Provisions in the Telecommunications Act of 1996; Interconnection between Local Exchange Carriers and Commercial Mobile Radio Service Providers*, First Report and Order, 11 FCC Rcd. 15499, 16037, 16044 (1996)("*Local Competition Order*")(CMRS carriers complain "that they are unable to negotiate interconnection arrangement based on mutual or reciprocal compensation because of incumbent LEC bargaining power;" "the problem of achieving mutual compensation is further compounded because incumbent LECs not only charge rates that bear no relationship to their costs but also refuse to compensate CMRS providers for termination of landline-originated calls;" "incumbent LECs even charge CMRS providers for terminating incumbent LEC-originated calls"; "we conclude that, in many cases, incumbent LECs appear to have imposed arrangements that provide little or no compensation for calls terminated on wireless networks, and in some cases imposed charges for traffic originated on CMRS providers' networks.")

customer. From the ILEC's perspective, it was able to insist on "heads I win, tails you lose" compensation for traffic exchange. This allowed the incumbent LECs to raise wireless carriers' costs, thus inflating the prices that wireless carriers had to charge to their customers and thereby limiting wireless carriers' competition with landline services.

The 1996 Act changed all of that. Under the 1996 Act, for all local calls, an incumbent LEC could charge a wireless carrier (or, for that matter, a CLEC) for traffic that the wireless carrier originated, but could no longer charge a wireless carrier for traffic that the originated from an incumbent LEC's own customer.[10] Moreover, under the 1996 Act, the wireless carrier is entitled to compensation for all local traffic that originates on the ILEC's network and terminates on the wireless carrier's network, and the rate the ILEC paid the CMRS carrier had to mirror the rate that it charged the CMRS carrier. Furthermore, the FCC ruled that reciprocal compensation rules would apply to all CMRS traffic that originated or terminated within a "Major Trading Area," a large region used for PCS licensing that was much larger than traditional ILEC local calling areas.

There were two significant results from these changes with respect to wireless intercarrier compensation. First, incumbent local telephone companies could no longer use traffic exchange fees to increase a wireless carrier's costs and thus prevent a wireless carrier from offering prices that would compete with the incumbent local telephone company's core services. By making these charges cost-based and symmetrical, the 1996 Act allowed wireless carriers to compete for customers across the consumer market – with the result that today there are more wireless subscribers than wireline lines

[10] Technically, the 1996 Act's reciprocal compensation rules apply to all traffic that is not interstate or intrastate exchange access, information access or exchange services for such access. *See* 47 C.F.R. 51.701.

nationwide.[11] Second, because the traffic exchange fees that wireless carriers paid were no longer strictly tied to ILEC traditional wireline local calling areas, wireless carriers were able to offer regionwide and national calling plans. This led directly to the emergence of today's popular wireless one-rate bucket pricing plans.

Unfortunately, rather than extending the successful wireless interconnection and traffic exchange provisions to broadband services, and particularly to VoIP services that are exchanged with traditional PSTN providers, the staff draft misses the core teachings of the wireless experience and fails to apply those lessons to broadband. Unlike the 1996 Act's reforms, the staff draft would permit the large incumbent telephone companies to impose on smaller competitors whatever compensation regime, at whatever price level, they wanted. Particularly with respect to VoIP, there is no reason to believe that the large incumbent LECs won't immediately seek to replicate the types of compensation arrangements that they had in place with respect to wireless carriers before 1996. Like pre-1996 wireless carriers, VoIP providers will be very small relative to the incumbent LECs, and will have a much greater need both to receive calls from and terminate calls to the ILEC's customers than the ILEC will need to do with respect to the VoIP provider's customers. This asymmetric market power is exactly what led to the asymmetric charges between incumbent LECs and wireless carriers prior to 1996. Should the large incumbent telephone companies be able to impose those unbalanced, asymmetric charges far above cost-based levels, the incumbents will be able to squeeze VoIP out of

[11] Indeed, while wireless carriers were afforded interconnection in 1993, *see* 47 U.S.C§ 332(c)(1)(B), it was the symmetrical interconnection requirements of the 1996 Act that spurred rapid change. For example, the innovative one-rate plans that now characterize the wireless market were introduced in 1998. *Implementation of Section 6002(b) of the Omnibus Budget Reconciliation Act of 1993; Annual Report and Analysis of Competitive Market Conditions with Respect to Commercial Mobile Services*, Fourth Report, 14 FCC Rcd. 10145, 10155-6 (1999).

competition for mainstream consumers, and relegate VoIP to a niche – much as wireless occupied only a niche prior to 1996.

Furthermore, although the staff draft permits direct and indirect interconnection, it does not permit a party to insist on direct interconnection, even for VoIP, when that is more efficient, as the 1996 Act did.

A better solution would be for this Committee to heed the lessons of the wireless experience and to embrace a single, symmetrical mechanism for traffic exchange, particularly where it involves the exchange of VoIP traffic with traditional telephone providers. Both the pre-1996 Act marketplace and the history of post-1996 Act intercarrier compensation regulation (including the FCC's need to step in and regulate CLEC access charges) show that traffic exchange, at least with the PSTN, must be subject to cost-based regulation.[12] Neither do circuit-switched legacy access charges have a place in the emerging IP-based world. These changes would require substantial revisions to current Sections 103 and 203 of the staff draft. In particular, although the draft references the availability of arbitration for any complaints, there are no substantive standards that would create the basis for any complaint. Thus, the bill provides only an empty process, with no substantive protections to enforce.

[12] *See Access Charge Reform; Reform of Access Charges Imposed by Competitive Local Exchange Carriers*, Seventh Report and Order and Further Notice of Proposed Rulemaking, 16 FCC Rcd. 9923, 9936 (2001) ("we conclude that some action is necessary to prevent CLECs from exploiting the market power in the rates that they tariff for switched access services).

D. Give New Services Adequate Time to Implement Mandates Without Threats of Service Shut-Offs

One other lesson learned from wireless is that the public interest is best served when new technologies are given adequate time to implement new mandates. Take, for example, wireless E911. The FCC initially mandated wireless E911 in 1996. Wireless worked steadily since 1996 to implement E911. If the FCC had forced wireless in 1996 or anytime thereafter, to suspend service to any subscriber that could not receive E911 service, we would not have the widespread, high quality wireless services we have today

Yet that is the approach that the FCC has threatened with respect to VoIP. And like wireless, this is not an issue of a lack of will. A VoIP provider cannot yet go to a single vendor and obtain connectivity to all selective routers nationwide. For nomadic applications, solutions are just now being developed and implemented, and – like Phase II wireless E911 – only some PSAPs will be capable of receiving and utilizing nomadic E911 data. We therefore urge this committee to adopt a more phased approach and to recognize that public interest is not served by service suspensions, just as the Senate Commerce Committee recently did.

There are key elements from the S. 1063 as unanimously passed by the Senate Commerce Committee last week that are necessary. The Senate Commerce Committee recognized that providing E9-1-1 requires Incumbent phone companies to provide reasonable access to the 9-1-1 network itself, equivalent liability relief for 9-1-1 call takers, and flexibility for VoIP providers in meeting new obligations. Importantly, the legislation also ensures that VoIP customers are not cut off from vital communications services. The Senate legislation focuses not only on what is achievable today, but on

developing a comprehensive national plan for creating a next generation 9-1-1 network capable of a host of breakthrough emergency enhancements.

Equivalent liability relief for PSAPs and others – as is contained in H. R. 2418 the ''IP-Enabled Voice Communications and Public Safety Act of 2005'' are of particular note. Such a liability provision, the same as this Committee afforded the wireless industry in 1999, is essential because some PSAPs are being told by their counsels not to accept VoIP 911 calls (as in the case in Illinois).

III. Stabilize The Regulatory Environment To Permit All Market Participants To Invest In Delivering Services To Consumers.

Over the past three years, the regulatory rules for entities other than incumbent local telephone companies have been in a constant state of flux. First, it was unbundled local switching that was under attack. But now, even the provision of unbundled loops – the most difficult network element to duplicate – is under attack. The FCC, for example, recently adopted an order that eliminates loop unbundling in several parts of the Omaha, Nebraska market.[13] And this is occurring even though the FCC has already given ILECs a roadmap to full deregulation: if an ILEC builds fiber to within 500 feet of a customer's residence or business, the ILEC is entirely freed of any loop unbundling obligations.[14]

It is time for the Congress to declare a truce that will allow non-incumbents to invest in and execute their business plans. Although the Staff Draft makes clear that the bill does not affect the rights of a telecommunications carrier to obtain unbundled network elements, it would be better to go further. The Congress should require that unbundled loops continue to be provided for a substantial interim period, say, for example, 10 years, at current rates, terms and conditions, subject to the FCC's already granted relief for fiber to the curb. Such a provision would end what would otherwise be piecemeal MSA-by-MSA litigation over loop unbundling, but allow the incumbent LECs to end unbundling to any premises to which it has implemented fiber-to-the-curb.

Furthermore, the Section 105(a) of the November 3, 2005 Staff Draft appears to truncate a number of established rights of telecommunications carriers who may also be

---

[13] FCC News Release, "FCC Grants Qwest Forbearance Relief In Omaha MSA," (rel. September 16, 2005)

[14] *See Review of the Section 251 Unbundling Obligations of Incumbent Local Exchange Carriers; Implementation of the Local Competition Provisions of the Telecommunications Act of 1996; Deployment of Wireline Services Offering Advanced Telecommunications Capability*, Order on Reconsideration, FCC 04-248, 19 FCC Rcd. 20293 (2004).

BITS providers. While this section preserves a telecommunication's carrier's right to obtain unbundled network elements pursuant to Section 251(c)(3) and collocation pursuant to Section 251(c)(6), the enumeration of only those two sections suggests that other telecommunications carrier rights with respect to telecommunication services would not longer apply, including, among others:

- Interstate interconnection under Section 201,
- Just, reasonable and non discriminatory rates for interstate services under Sections 201 and 202,
- The right to obtain damages in Section 207,
- Number portability, dialing parity, access to rights of way, reciprocal compensation, interconnection, resale, and notices of network changes under Sections 251(b) and (c).

While a savings clause making clear that telecommunications carriers do not lose rights by also providing BITS is necessary, the savings clause should more broadly safeguard all telecommunications carrier rights under the Communications Act.

* * *

On behalf of EarthLink, I thank the Subcommittee for the opportunity to present these views. The staff has done yeoman's work, and presented you with a thoughtful starting point for further legislative efforts. By focusing on the consumer, and by keeping in mind the lessons learned from the highly successful legislative efforts to encourage the growth and deployment of wireless services, the Committee can craft a truly pro-consumer, pro-innovation legislative framework for broadband services.

EarthLink Municipal Networks

EarthLink

APPENDIX TO TESTIMONY OF CHRIS PUTALA
EXECUTIVE VICE PRESIDENT, PUBLIC POLICY
EARTHLINK, Inc.
Before the
SUBCOMMITTEE ON TELECOMMUNICATIONS & THE INTERNET
COMMITTEE ON ENERGY & COMMERCE
U.S. HOUSE OF REPRESENTATIVES
November 9, 2005

EarthLink Municipal Networks, a business unit within EarthLink, Inc., was created to provide revolutionary new services to EarthLink's customer base and to uniformly extend all of the benefits of the Internet to those in the often overlooked areas within our nation's cities. We will do this by providing affordable high-speed wireless Internet access to the citizens, first responders, and employees of municipalities throughout the nation – and we will do so without encumbering cities with the cost of the network.

Our team was recently selected by Wireless Philadelphia to develop and implement what will be the nation's largest municipal WiFi network. To offer a few specific points regarding the agreement with Wireless Philadelphia:

- EarthLink will deploy and manage a 135 sq. mile wireless network providing broadband Internet to the entire City and County of Philadelphia.
- EarthLink will build, own and manage the wireless network, at no cost to the City, while providing Wireless Philadelphia a revenue share to fund its operation and to help address their important mission.
- EarthLink has partnered with Wireless Philadelphia to bridge the Digital Divide, subsidizing affordable high speed Internet access to low-income households often in overlooked neighborhoods.
- This network will serve all the citizens of Philadelphia by providing a competitive alternative to current broadband and dial-up Internet services, and will provide service in areas that, to date, have been underserved with affordable broadband services.
- Wireless Philadelphia and EarthLink have reached agreement on the major deal points of this project and will now progress to complete a definitive agreement before the end of the year.

- Retail rates on the network will be at or below the common price of premium dial-up Internet access, with a special rate of about half that for low income households.

- The network will provide the following products for Philadelphia:
  - Affordable, high-speed, mobile wireless Internet access
  - Open Access to third-party Internet service retailers
  - Reciprocal roaming capabilities for Hotspot companies
  - Free access in designated city parks and public places
  - Daily and weekly rates for visitors and occasional users
  - Guaranteed network upgrades on an ongoing basis
  - Future products over the wireless networks that will allow for more effective services and improved security for the citizens of Philadelphia.

This agreement catapults Philadelphia into a worldwide leadership position in technology and will enable officials to meet the needs of their residents as well as enhance the visitor, tourism and business climate of that great city.

To provide the Committee with some of the background of how the Wireless Philadelphia initiative will work, the diagram below highlights the multiple technologies involved:

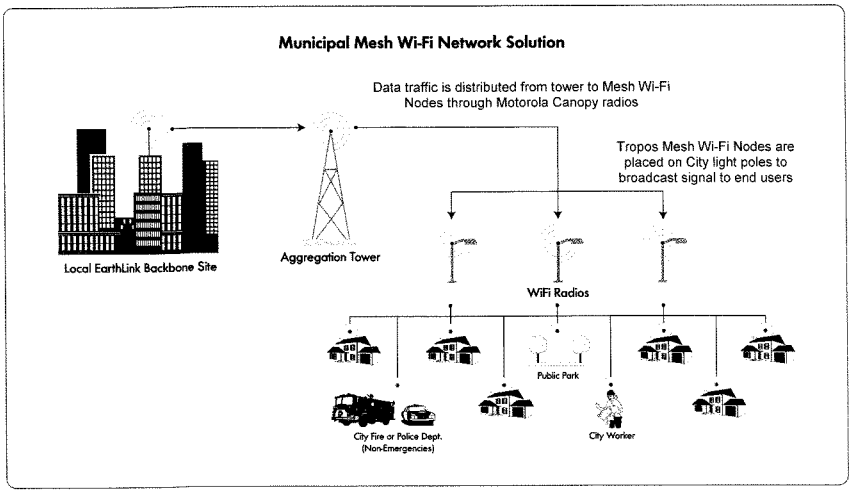

Municipal wireless service is a new use of WiFi technology that is already extremely widespread and proven. WiFi is based on a technical protocol that allows many users to share access to a network without blocking each other. Because of its robustness, WiFi has been a tremendous economic success, finding its way into millions of hands and homes. Because of this wide adoption, volume pricing makes it far less expensive to build a new broadband service using WiFi than with any other technology. Because radio waves don't discriminate, access to this technology is consistently available to everyone.

The low cost of this technology and its wireless mobility aspect enable WiFi-based broadband networks to reach a new audience not served by traditional fixed broadband Internet services. This new audience consists of "Digital Divide" users who could not previously afford high-speed Internet, and often had no service available to them even if they could. It also consists of current dial-up Internet subscribers looking forward to faster, mobile, always-on Internet services at no increased cost.

This new audience also includes public safety and public works users who need a much higher speed and lower cost alternative to their current wireless data services. This will enable inexpensive information services for non-mission critical activities that are superior to the services used by police and firefighters today.

This new audience also includes occasional users such as tourists and business travelers who want inexpensive ubiquitous access to the Internet on their own terms.

EarthLink has long recognized that neither the consumer nor the network operator is best served by exclusive-access Internet networks. The key to making our network profitable is to get many people to use it, and the key to that is Open Access. The more companies that are marketing a retail product on the network – especially local companies with close ties to the customer base – the easier it will be to maintain and upgrade that network. We are absolutely committed to this Open Access model and we have spent years arguing for it, and developing services to deliver it to consumers.

We're very excited to be bringing affordable broadband service to Philadelphia and look forward to building on this model by signing agreements with other cities throughout the nation.

Mr. UPTON. Thank you. Mr. Rehberger?

STATEMENT OF WAYNE REHBERGER

Mr. REHBERGER. Good morning, Chairman Upton, Chairman——

Mr. UPTON. You need to hit that mike button as well.

Mr. REHBERGER. Good morning, Chairman Upton, Chairman Barton, and members of the committee. Thank you for inviting me here today. Today I am testifying on behalf of XO Communications. We are the largest competitive CLEC in the U.S. today, and COMPTEL, the competitive communications industry trade association, of which XO is a board member. I ask that COMPTEL's analysis of the staff draft, which is included in my written statement, be included as part of the record.

For decades, it has been the innovation of entrepreneurial companies coupled with marketing open regulation—market opening regulations, cost-based compensation for network access, that have brought choice, lower prices, and new technologies and services to the customer. If we look back a little bit, we know that the Bell companies had DSL technology years before the 1996 Telecom Act, but they never deployed that technology until Covad aggressively deployed it. Until recently, the Bell's had no incentive to offer VoIP technology, until Vonnage paved the way in the consumer market, and companies like XO offer VoIP products to business customers.

As I mention in my written statement, there appears to be several mistaken assumptions underlying the draft regulation related to Telecom. First, the draft seems to imply that packet-switched Internet and circuit-switched network, or PSTN networks, are physically separate networks. Consider the following: in your home today, there is a wall jack that connects the PTSN providing plain old telephone service to you. If you plug your computer into that same jack, you have dialup Internet access. And if you plug a digital subscriber line modem into that very same jack, you can have high-speed Internet access. That high-speed Internet access also allows you to get voice over the Internet protocol, or VoIP, calls over the exact same wall jack. Nothing has changed except for the electronics that are attached to the wall jack and the wires. However, under this draft, regulations will differ based on the use of packet- or circuit-switching. In particular, Section 105 appears to protect the competitor's access to unbundled network elements and co-locations but it seems to restrict such rights to only the circuit-switch world. Furthermore, a telecommunication service qualifies for this protection, possibly meaning that only the provision of circuit-switch voice would qualify. It is not clear how innovate companies who operate one integrated network and provide both services would be able to comply with two different regulatory regimes.

The second assumption is that voluntary commercial negotiations for interconnection under Section 103 of the draft will provide access to the incumbents' networks at rates and terms that will continue to force their competition and innovation. Decades of telecommunication history have proven otherwise. Without the backstop of the 1996 Act, which requires that interconnection be on just, reasonable and non-discriminatory terms and conditions, provide—and it provides effective enforcement mechanism, commercial

agreements alone would not have provided a viable option for competitors.

To compete, XO and other competitors have been building fiber rings in the metro areas to carry traffic that is aggregated from numerous business customers, and we also build long-distance networks to carry aggregated traffic between metropolitan areas. But, in the business market, it is a fact that fewer than 10 percent of the office buildings in the U.S. have alternative fiber connected to them. Instead, for over 90 percent of the buildings and those customers, the incumbents and competitors alike use the connection to the building that is owned by the ILEC. Speaking from XO's own experience, I can assure the committee members that where the FCC has granted relief of certain interconnection requirements, or access to unbundled network elements, on many occasions, the Bell companies have either refused to negotiate for use of their networks, imposed conditions that have driven up customer prices, or have made it uneconomical for us to compete. In some instances, XO may be able to negotiate marginally better terms, given our size and scale, but that won't be the case for the hundreds of other competitors who are smaller than we are.

My final point to the committee is that the staff draft would carve out the telecommunications industry as the only network industry in America that does not operate under some form of highly regulated network sharing. Competing electricity providers share transmission access, competing rail providers share rail access, and competing natural gas suppliers share pipelines. In fact, the network sharing rules embodied in the 1996 Act have benefited the telecommunications industry for over 10 years. They are the reason we continue to experience the industry innovations and customer choice we have today. Why should we all of a sudden treat the telecommunications industry different based on the next popular technology.

Mr. Chairman, thank you for the opportunity to appear before the subcommittee today, and I am happy to answer any questions.

[The prepared statement of Wayne Rehberger follows:]

PREPARED STATEMENT OF WAYNE REHBERGER, CHIEF OPERATING OFFICER, XO COMMUNICATIONS, INC.

Mr. Chairman and Members of the Committee, thank you for inviting me here today. I am Wayne Rehberger, Chief Operating Officer of XO Communications, Inc. of Reston, Virginia. Today I am testifying on behalf of XO Communications and COMPTEL, the competitive communications industry trade association of which XO is a board member.

BACKGROUND ON XO COMMUNICATIONS

XO Communications is the largest independent competitive local exchange carrier providing telecommunications and broadband services. Originally formed in 1996, XO has expanded its telecommunications offerings from its original 4 small markets to 70 metro area markets in 26 states. Our company provides a comprehensive array of voice and data telecommunications services to small, medium, and large business customers. Our voice services include local and long distance services, both bundled and standalone, other voice-related services such as conferencing, domestic and international toll free services and voicemail, and transactions processing services for prepaid calling cards. XO data services include Internet access, private data networking, including dedicated transmission capacity on our networks, virtual private network services, Ethernet services, and web hosting services.

XO has invested heavily in building its own facilities spending over $8 billion and constructing over 1.1 million miles of fiber. We have metro fiber rings to connect

customers to our network, and we own one of the highest capacity and scalable IP backbones in the industry, capable of delivering data end-to-end throughout the United States at speeds up to 10 Gigabits per second.

BACKGROUND ON COMPTEL

Founded in 1981, COMPTEL is the communications industry association of choice and represents competitive service providers and their supplier partners. Based in Washington, D.C., COMPTEL advances its members' businesses through policy advocacy, education, networking, and trade shows. COMPTEL members are entrepreneurial companies building and deploying next-generation networks and services to provide competitive voice, data, and video services. COMPTEL members create economic growth and improve the quality of life of all Americans through technological innovation, new services, affordable prices and customer choice. COMPTEL members share a common objective: advancing communications through innovation and open networks. For decades, it has been the innovation of entrepreneurial companies coupled with market opening regulations that have brought choice to customers and new technologies and services to the market. The Bell companies had DSL years before the 1996 Act, but did not deploy this technology until Covad aggressively deployed DSL. Same is true for VoIP. The Bells had no incentive to offer VoIP, until Vonage paved the way. This tradition of competitive innovation is continuing with the numerous companies that are creating new ways to serve customers using cutting edge technologies. For these reasons, I appear before the Subcommittee to voice significant concerns with the staff draft

STAFF DRAFT

In my testimony today, I will make the following points about the discussion draft.

1) The discussion draft is based on a number of mistaken assumptions.

2) The discussion draft would create "gatekeepers" to the Internet.

3) The discussion draft adopts an approach that has been rejected for every other networked infrastructure industry in the United States.

Mistaken Assumptions

The draft is based on a number of mistaken assumptions, which include the following:

1) That the packet-switched Internet and the circuit-switched Public Switched Telephone Network (PSTN) are physically separate networks;

2) That competitors can easily build networks that reach end users; and

3) That voluntary negotiations without rules or enforcement will work.

A simple example illustrates why the first assumption is mistaken. In your home today there is a wall jack that connects to the PSTN. If you plug a phone into that jack you have voice service. If you plug a fax machine into that same jack, you have an analog data service. If you plug your computer into that same jack, you have dial up Internet access, and if you plug a digital subscriber line (DSL) modem into that very same wall jack, you have high speed Internet access. That high speed Internet access also allows you to get Voice over Internet Protocol—VoIP—from the exact same wall jack from which you have gotten circuit-switched voice service for years.

So, what changed? Clearly the wall jack did not change, nor did you get new wires strung to your house. All that changed were the electronics that you and the phone company attached to that wall jack and wires. The problem is that the draft bill aims to change the regulatory regime based on the type of electronics attached by differentiating between the uses of packet switching different from circuit switching. XO, like many competitive companies, uses a combination of packet and circuit switching in providing services. Under this draft, my company would be forced to operate under two separate and incompatible federal regimes.

What the above example illustrates is that the Internet is not a separate network. Rather it is the term used to describe a multitude of interconnected networks that all use a common protocol to communicate. XO's network is part of the Internet, as are the networks run by AT&T, SBC, MCI, Verizon, Global Crossing, Bell South, Level 3, Qwest, British Telecom, and many others. These networks are interconnected today because section 201 of the Communications Act and the Commission's rules ensure that any party can get interconnection on just, reasonable and non-discriminatory terms.

It's important to understand that the Internet is simply the next evolution of the PSTN. Less efficient circuit switching is being replaced with more efficient packet-switching, just as copper and coaxial cable are being replaced with fiber because

fiber is cheaper to maintain and has far greater bandwidth. Like new parts added to an older car to "supe it up" and make it go faster, fiber and newer electronics have been plugged into the existing networks to convey information faster. It's improved, but it's not a new network. Same with the old car that contains a new fuel injection system or new tires: it's improved, but it's not a new car.

The second mistaken assumption is that anyone who wants to compete can build a network that reaches end user customers. COMPTEL members can assure you that nothing is further from the truth. In fact, the only ubiquitous wireline networks that exist today were all built in a monopoly environment. The incumbent phone companies like Verizon, SBC, BellSouth, and Qwest each had decades in which to build out their networks to all homes and businesses. Likewise, the incumbent cable companies like Comcast, Time Warner, Cablevision, and Cox all had at least a decade of protected franchises in which to construct their networks to residential users. In contrast, wireline competitors to the incumbent phone and cable operators have had to build their networks in the face of a competitor who already has a network and customers, and consequently a revenue stream with which to pay for upgrades and improvements to the network.

The story is somewhat different for wireless services, but only slightly. In that case new PCS licenses were granted before the two existing cellular licensees were firmly entrenched, but even so the two largest network operators are owned by incumbent phone companies who were holders of the original cellular licenses.

Another telling example is the current state of facilities based competition in the business market. XO operates exclusively in the business market today, which is more concentrated. It is a fact that fewer than 10 percent of the office buildings in the U.S. have alternative fiber connected to them. Instead, for over 90 percent of the buildings, incumbents and competitors alike use the high speed fiber connection to the building that is owned by the incumbent. In this largely deregulated business marketplace, the market has decided that it is not economically efficient to build multiple networks to connect to the same building. Instead, what XO and other competitors have been doing in an efficient and cost effective manner is building fiber rings in metro areas to carry traffic aggregated from numerous business customers, and also building long distance networks to carry aggregated traffic between metropolitan areas. What this illustrates is that the assumption in the bill that those who want to compete in offering communications services to business and residential customers can simply build their own network is mistaken due to basic economically realities.

Finally, some view the voluntary commercial negotiations for interconnection under Section 103 in the draft as a solution to provide access to incumbent's networks at rates that will allow the competitor to compete. Again, a simple review of actual behavior in the marketplace demonstrates that this assumption is also mistaken.

Today all interconnection with networks that reach end users has been accomplished by rule of law. Competitive carriers like XO get interconnection to incumbent phone companies through under sections 201 and 251 of the Communications Act. Cable companies also get the interconnection they need to provide Internet access and VoIP through section 251, and also make use of special access circuits available under section 201. Wireless carriers get access to the incumbent phone networks under sections 201, 251, and 332(c) of the Communications Act. Each of these sections not only require interconnection of networks, they also require that such interconnection be on just, reasonable, and non-discriminatory terms and conditions and provide enforcement mechanisms. Yet for packet switched services this draft essentially eliminates those requirements.

In the absence of such requirements, the market has already demonstrated repeatedly that voluntary commercial negotiations will not work. The requirements cited above were adopted by Congress in 1934 because AT&T was refusing to interconnect independent providers, in 1993 because incumbent phone companies were refusing to interconnect to wireless carriers, and in 1996 because incumbent phone companies were refusing to interconnect with competitors. Competitors have also found it difficult to negotiate their way onto cable networks. Currently, none have been able to do so.

Interestingly, the draft bill itself recognizes that voluntary negotiations will not work to provide competition with respect to video services. Section 304(a)(1)(E) of the bill would require the FCC to apply to Broadband Video Service providers the same programming ownership restrictions and regulations that are currently imposed on cable operators. Those programming provisions were adopted by Congress precisely because cable operators were refusing to permit competing satellite providers to have access to programming shown on cable networks. The Bell Companies, as new entrants into the video marketplace, need those access requirements

in order to offer competing video service. If it is okay for the Bell companies to use their network ownership to deny access to competitors except where voluntary agreements provide such access, why then shouldn't the cable operators be able to use their interests in video programming to deny video content to Bell Companies except where the Bell Companies can negotiate such access on a voluntary basis? COMPTEL and XO understand the need for those programming access provisions to provide video competition, and believe that the need for those provisions underscores the need to continue similar requirements to ensure competition in communications marketplace.

Finally, speaking from XO's own experience, I can assure the committee members that in every instance in which the Regional Bell Operating Companies have been relieved by the FCC of statutory requirement regarding interconnection or access to unbundled network elements, they have either refused to negotiate at all with respect to allowing XO or other competitors to use their networks, or else have imposed onerous terms and conditions that drive up customer prices and limit competition. In some instances, XO may be able to negotiate, given its size and scale. However, subjecting the entire industry to a one-size fits all negotiation regime would amount to the equivalent of trying to negotiate with a school bully for your lunch money while he has you in a headlock.

Internet Gatekeepers

Because of its reliance on false assumptions, the draft bill would result in the establishment of "gatekeepers" to the Internet. This bill would create a world where the few companies that control the network portals that reach end-users, the "on-ramps" to the Internet, would be able to control access to the Internet from both the consumer perspective and from the perspective of companies that must connect to the Internet to conduct business. The reason they would be able to exert this control is that everyone who seeks to offer content and services over the Internet—whether it is Amazon seeking to sell books, Yahoo! or Google offering search services and content, Disney seeking to offer movies, Vonage seeking to offer VoIP, or XO offering communications to businesses—all of us need to reach end users in order to offer our services. Those who control the access to end users ultimately control the Internet if there is no obligation to permit competitors to access those end users on reasonable terms and conditions.

The "net neutrality" provisions in section 104 of the draft bill would do nothing to prevent incumbent network operators from acting as gatekeepers for two reasons. First, because the interconnection requirements in section 103 of the draft bill include no requirements for direct interconnection on reasonable and non-discriminatory terms and conditions, providers of content and services that compete with those offered by the network operator that controls access to the end user, the network operator will simply demand uneconomic terms and conditions that effectively prevent competitors from offering services over the operator's network. And for those competitors that nonetheless attempt to provide service notwithstanding uneconomic interconnection terms and conditions, the exceptions in section 104(b) for network management, security, and provision of video or premium services eviscerate the consumer protections purportedly provided in section 104(a).

The U.S. Economy Is Made Up Of Various Shared Networks

I think it is essential point out that the staff draft would carve out the telecommunications industry as the only networked industry in the history of America that does not operate under some form of regulated network sharing. The electricity, gas, railroad and airline industries all operate under a shared network structure that requires network owners to provide access to their competitors in exchange for cost plus a reasonable profit. It should apply the same principle to the communications industry of today, and the future: access to all public networks upon reasonable request at just and reasonable terms, rates and conditions.

The draft before us today would allow competition only if competitors were to first build redundant infrastructure to every home and business in America. But time and again Congress has decided that such redundancy is uneconomical. Furthermore, rational market players would never undertake such an endeavor. As I mentioned earlier, XO has invested over $8 billion in its own facilities. However, even with this extensive network, we are nowhere close to having ubiquitous on-net coverage. To build such a network would require over $100 billion and many decades to construct—not to mention monopoly rights like the Bells have had. Instead, we reach most customers by procuring facilities or circuits from other providers.

Competitors want the right to build facilities when they determine it makes economic sense to do so. In fact, XO is committed to building additional facilities, but only if sufficient customer revenue exists to justify the cost. However, that is very

different from being required to build facilities to every customer to whom one wishes to offer service. If there were no existing facilities, obviously someone wishing to offer service must construct them. But that is a very different proposition from what competitors face today. Today every existing home and business has at least one wireline communications network already constructed to it. Well over 90 percent of those customers, both business and residential, are passed by at least one broadband pipe—fiber, coaxial cable, or DSL capable copper wire. In light of these existing facilities, the only rational way for competition to exist is by sharing the existing infrastructure—regardless of whether that infrastructure was built by an incumbent or a competitor.

Sharing infrastructure is not an unusual concept. In fact, it is the norm rather than the exception. Congress did not require that alternate energy providers build a second or third set of electrical wires into each home in order to provide competition in energy pricing. Instead, the grid is shared in exchange for cost plus a reasonable profit. Competing railroads are required to allow the use of their tracks by their competition. Gas suppliers must share a common pipeline. Why? Because basic economic realities make it uneconomical to build redundant networks to end users. Telecommunications is no different and should not be treated differently.

CONCLUSION

As my testimony illustrates, the problems created by the draft bill are numerous and complex. If adopted it would create gatekeepers for the Internet, with negative consequences that would ripple through all segments of our Information economy. The bill would re-establish a monopoly over communications services for most businesses in this country, and at best would create a duopoly for most residential consumers. I urge the committee to adopt positive and constructive legislation that will give all competitors, and Internet users, access to communications networks. This legislation need not be complex. It should adopt basic rules that apply to all communications providers that use public rights of way or spectrum—be they incumbents or competitors and regardless of whether they use packet-switching, circuit-switching, or copper, coaxial cable, fiber, or wireless. The core principles should be service upon reasonable request, non-discrimination, interconnection, unrestricted resale, and net neutrality, with federal rules enforced by State commissions.

The bottom line is that the vibrant and competitive Internet that we all increasingly rely on today is the result of over 30 years of pro-competitive decisions by Congress and the FCC. Those decisions regulated the transmission networks that make up the Internet, while leaving the applications provided over those networks unregulated. By removing the basic regulations governing the transmission networks, this bill would permit private parties—namely the limited number of private parties who built ubiquitous networks in a monopoly environment—to use those networks to control access to the Internet. One only has to refer to recent comments made by SBC's CEO, Ed Whitacre in a recent Business Week interview: "Why should they [competitors] be allowed to use my pipes?" This statement, alone, shows how anti-competitive forces can have a debilitating effect on competition and innovation.

Attached to my testimony is an analysis COMPTEL had prepared which details specific problems with those provisions that are of the greatest interest to COMPTEL members. In the interests of time, I respectfully request that COMPTEL's analysis be included in the record as part of my testimony. Thank you for allowing me to testify today on behalf of XO and COMPTEL.

Mr. UPTON. Thank you. Mr. Salas?

STATEMENT OF EDWARD A. SALAS

Mr. SALAS. Good morning, Mr. Chairman and members of the subcommittee.

Mr. UPTON. You need to hit that button as well—mike button.

Mr. SALAS. Good morning.

Mr. UPTON. No. It is not working? Sorry.

Mr. SALAS. Good morning, Mr. Chairman and members of the subcommittee. Thank you for holding this hearing today. I am Edward Salas, Vice President of Network Planning for Verizon Wireless. I am responsible for network strategy, planning, purchasing, and administration. I am here representing Verizon Wireless.

Verizon Wireless thanks you and your colleagues for your time and effort put forth in working to craft legislation that updates our Nation's telecommunications laws. We also appreciate the attention that you gave to the concerns raised by Verizon Wireless on the first draft. Specifically, we applaud your efforts in streamlining the far-reaching national consumer standards, welcome the progress toward improved net neutrality provisions, and appreciate changes to the FCC's role. We believe that these revisions were clearly a step in the right direction, and it is Verizon Wireless's hope that as the committee continues this drafting process, consensus is reached on a bill that fosters competition, removes unnecessary government regulation, and allows a deregulated market to bring benefits to consumers.

The wireless industry has been a critical driver of the national economy, generating tens of millions of new jobs, building new communications infrastructure, and serving more than 190 million Americans. With certain modifications, the draft bill can lead to even more benefits to consumers and the economy.

Today I will share with you some of our specific concerns. I hope that we will have the opportunity to share with you some additional concerns and suggestions as your legislative efforts continue.

(1) Verizon Wireless is making major investments in broadband wireless technology. Verizon Wireless is a firm believer in the broadband future. We were the first company to roll out what we consider real 3G services, and we are leading the industry in broadband deployment. We first deployed our EVDO service in October 2003 in San Diego and Washington, D.C. We have invested well over $1 billion in expanding our EVDO offering to encompass more than 170 major metropolitan markets and 84 major airports across the nation, and we will continue to expand the customers' ability to access this amazing technology.

(2) Wireless broadband relies on IP technologies and leverages our circuit-switch technology as well. For voice and narrow-band data, our network operates over traditional circuit-switch facilities. Our EVDO broadband service is fundamentally an IP-based technology working over a standard non-IP air interface, but all of our EVDO-based devices have a circuit-switch capability to support all of our basic voice and legacy services. Many of our competitors also deliver their services over a single integrated wireless network, seamlessly weaving high-speed and lower-speed capabilities, as well as packet- and circuit-switch technologies.

(3) The draft bill maintains the old silo approach for new technologies. Verizon Wireless agrees that IP-enabled services are the platforms of the immediate telecommunications future. On the other hand, the draft bill is structured along the lines of the regulatory model for landline services that has been in place for decades. Consumers don't know or care whether the wireless services they buy are deployed over a packet technology or a circuit-switch one. They simply want the services and they want them to perform reliably. Attempting to regulate such packet-switch digital services and applications in silo-like regimes where service is provided over a single platform may be regulated and taxed differently, will create an administrative and regulatory nightmare.

(4) The draft bill does not expressly encompass mobile wireless services. Verizon Wireless is also concerned that the bill could be read to omit wireless altogether from the landmark deregulatory approach that would apply to BITS providers. The draft bill appears to require that a BITS provider must use a packet-switch transmission service. As I noted earlier, Verizon Wireless, and other wireless companies, currently provide broadband service over an integrated platform of both packet- and circuit-switch technologies. The two cannot be segregated. It is time to remove the regulation for wireless packet technology. Why should the analysis differ merely because the broadband technology at some times and in some places may rely on a hybrid circuit-switch-packet technology. If the committee agrees, the simplest path to that result is to modify the definitions of BITS provider to include all services that are offered in conjunction with BITS.

(5) The net neutrality provisions should recognize the uniqueness of wireless services. We have some—we do have some concerns about the net neutrality, or access to BITS, in Section 104 of the draft legislation because they do not appear to acknowledge the critical technology distinctions between wireline and wireless networks. The air interface on a wireless network is significantly more bandwidth-limited than wireline's dedicated fiber optic or copper facilities, and must be shared by all users in a defined geographic area. Network performance and resource availability in the wireless environment is thus much more sensitive to variations in usage than a wireline network. In order for us to ensure the integrity and reliability of our network, and to provide consumers with the best available online experience, we cannot support unrestricted access to the Internet for downloading any and all applications or the connection of devices not approved for use on our network. Verizon Wireless does not block customers from accessing the Internet as long as they are lawful and not associated with any security or misuse risk. We believe we must control the amount of resources that any individual customer can demand from our network. The draft legislation is right to preserve the BITS provider's authority to protect the security and reliability of its network and broadband transmission services, but it is not clear how this authority will be reconciled with provider's duty not to block access to any lawful content, application or service provided over the Internet, and to permit subscribers to connect and use devices of their choosing. At least in the wireless environment, the device is, in fact, an extension of the network.

(6) Congress should make clear that wireless is to be subject to Federal regulation. While it is clear that we are trying to achieve the same result of a national deregulatory framework, it is our belief that we may be subject to entirely new, uncertain, complex reregulatory regime. It would retreat from and reverse the deregulation that has so served the Nation's economy and wireless customers. Now more than ever, States are attempting to reassert utility-type regulation over the wireless industry. Ironically, at the same time, the industry has been deploying national networks offering national rate plans that offer unparalleled benefits for consumers. States threaten to undermine these benefits by imposing a patchwork of burdensome and inconsistent rules. Congress can

simultaneously recognize the benefits of competition and prevent the harmful impacts of State-by-State regulation of a national industry by completing the deregulation began in 1993. The Federal Government is in the best position to oversee this national industry which serves the public across and without regard to State lines.

In conclusion, the committee took the first step in 1993. You have a unique opportunity to buildupon that success. Verizon Wireless hopes that as your legislative process continues, you keep in mind the technical complexities of the wireless network, and allow us the freedom to maintain our network resources and the ability to secure our network. We look forward to working with you in this process.

[The prepared statement of Edward A. Salas follows:]

PREPARED STATEMENT OF EDWARD A. SALAS, VICE PRESIDENT, NETWORK PLANNING, VERIZON WIRELESS

Mr. Chairman and Members of the Subcommittee, thank you for holding this hearing today. I am Edward Salas, Staff Vice President of Network Planning for Verizon Wireless. I am responsible for network strategy, planning, purchasing and administration. I am here representing Verizon Wireless.

Verizon Wireless thanks you and your colleagues for the time and effort put forth in working to craft legislation that updates our nation's telecommunications laws. We also appreciate the attention that you gave to the concerns raised by Verizon Wireless on your first draft. Specifically, we applaud your efforts in streamlining the far-reaching national consumer standards, welcome the progress toward improved net neutrality provisions, and appreciate changes to the FCC's role. We believe that these revisions were clearly a step in the right direction, and it is Verizon Wireless' hope that, as the committee continues its drafting process, consensus is reached on a bill that fosters competition, removes unnecessary government regulation, and allows a deregulated market to bring benefits to consumers.

Verizon Wireless views our appearance here today as an opportunity to share our views on your revised staff draft, and offer some insight on what we believe it will take to promote wireless competition, incent continued investment that benefits the economy and subscribers, and remove regulatory impediments that thwart innovation. This is the right time, and the right opportunity, to complete the deregulatory process for mobile radio services that Congress began in 1993 with passage of the Omnibus Budget Reconciliation Act. Congress had the foresight to recognize that removing wireless services from traditional, cradle-to-grave utility regulation would unleash the competitive marketplace to deliver benefits to consumers. Congress' expectation proved accurate. The wireless industry has been a critical driver of the national economy, generating tens of millions of new jobs, building new communications infrastructure, and serving more than 190 million Americans. With certain modifications the draft bill can lead to even more benefits to consumers and the economy.

Today, I will share with you some our principal concerns. I hope that we will have the opportunity to share with you some additional concerns and suggestions as your legislative efforts continue.

1. Verizon Wireless is Making Major Investments in Broadband Wireless Technology.

I first want to describe the actions our company is taking to offer broadband services to our customers. There is no doubt that broadband has enormous potential capabilities to deliver many features and capabilities to wireless consumers. Voice, text messaging, email, streaming video, emergency alerts, location services, and Internet access are only some of the amazing capabilities that this technology promises. Verizon Wireless is a firm believer in the broadband future. We were the first company to roll out what we consider real "3G" services, and are leading the industry in broadband deployment. We first deployed our "EVDO" service in October 2003 in San Diego and Washington, D.C. EVDO, derived from the CDMA 2000 technology family, increases peak data download speeds up to 2 Mbps, and typical, user-experienced download speeds range from 400 to 700 kbps. With EVDO, users can access exciting video applications via their handsets over our VCast service, or access the Internet through a wireless modem "aircard" that is inserted into a laptop computer. We have recently reached agreement with three major computer manufacturers to incorporate this capability directly into their laptops. We have invested well

over $1 billion in expanding our EVDO offering to encompass more than 170 major metropolitan markets and 84 major airports across the nation, and we will continue to expand the customers' ability to access this amazing technology.

2. Wireless Broadband Relies on IP Technology and Leverages Our Circuit Switched Technology as Well.

It is important to understand that Verizon Wireless and other wireless providers are using *both* IP and non-IP interfaces in their networks. For voice and narrowband data, our network operates over more traditional circuit switched facilities; at other times and places we operate in packet mode. Our EV-DO broadband service is fundamentally an IP-based technology working over a standard non-IP air interface, but all of our EVDO based devices have a circuit switched capability to support all of our basic voice and legacy services. Many of our competitors also deliver their services over a single, integrated wireless network, seamlessly weaving high-speed and lower-speed capabilities, as well as packet and circuit-switched technologies. The mix of packet and circuit technologies—and high-speed and lower-speed services—varies widely not only among wireless companies, but also in different geographic areas served by the same company. Moreover, that mix is constantly evolving as each wireless competitor works to offer the latest services to its customers including voice, Internet access, games, photos, music, and video services.

3. The Draft Bill Maintains the Old Silo Approach for New Technologies.

Now I'd like to talk about how the draft bill fits or doesn't fit with the reality of integrated, ever-evolving technology of wireless broadband. On the one hand, the draft bill rightly focuses on IP-enabled services, where the technology is going, not where it has been. Verizon Wireless agrees that IP-enabled services are the platforms of the immediate telecommunications future. On the other hand, the draft bill is structured along the lines of the regulatory model for landline services that has been in place for decades. Therefore, it incorporates the burdens of where we have been, rather than where we are going. It adopts multiple new classifications and definitions and applies different regulatory regimes to each. Verizon Wireless has concerns about this approach. The draft does not grapple with the rapid technological change, particularly in wireless, that eradicates these distinctions. Consumers don't know or care whether the wireless services they buy are deployed over a packet technology or a circuit-switched one. They simply want the services and want them to perform reliably. Attempting to regulate such packet switched digital services and applications in silo-like regimes, where services provided over a single platform may be regulated and taxed differently, will create an administrative and regulatory nightmare.

Our concern is that these regulatory distinctions will have the unintended consequence of impeding the innovations and growth of even newer services that are arising precisely because the distinctions among services to users are blurring.

4. The Draft Bill Does Not Expressly Encompass Mobile Wireless Services.

Verizon Wireless is also concerned that the bill could be read to omit wireless altogether from the landmark deregulatory approach that would apply to "BITS" providers. The draft bill appears to require that a BITS provider must use a packet-switched transmission service. As I noted earlier, Verizon Wireless (and other wireless companies) currently provides broadband service over an integrated platform of both packet and circuit-switched technologies. The two cannot be segregated.

If the committee believes that it is time to deregulate competitive telecommunications services—a view Verizon Wireless strongly endorses—it needs to craft a definition of a BITS provider that includes all wireless technologies. If it is time to remove regulation for wireless packet-technology, why should the analysis differ merely because the broadband technology at some times and in some places may rely on a hybrid circuit-switched-packet technology (1xRTT has circuit switched layer and a packet layer)? In our view, the right course is to recognize it is time to remove the last vestiges of common carrier, utility-type regulation from wireless. If the Committee agrees, the simplest path to that result is to modify the definition of BITS provider to include all services that are offered in conjunction with BITS or carried on the same network platform as BITS.

5. The Net Neutrality Provisions Should Recognize The Uniqueness of Wireless Services.

If Verizon Wireless in fact qualifies as a BITS provider, we applaud the general approach of the draft bill to treat us as an interstate, national service. We do have some concerns about the "net neutrality" or "Access to BITS" in Section 104 of the draft legislation, because they do not appear to acknowledge critical technology distinctions between wireline and wireless networks. The air interface on a wireless

network is significantly more bandwidth limited than wireline's dedicated fiber optic or copper facilities, and must be shared by all users in a defined geographic area. Moreover, various mobile applications place varying demands on this resource as well as the traditional load characterized by the raw number of customers operating in a cell. Network performance and resource availability in the wireless environment is thus much more sensitive to variations in usage than a wireline network.

We will certainly offer subscribers service plans that involve varied and reasonable bandwidth and capacity limitations and services that protect consumers from unwanted content or messages. However, in order for us to ensure the integrity and reliability of our network, and to provide consumers with the best available on-line experience, we cannot support "unrestricted" access to the Internet for downloading any and all applications, or the connection of devices not approved for use on our network. Verizon Wireless does not block customers from accessing the Internet as long as they are lawful and not associated with any security or misuse risk. But we believe we must control the amount of resources that any individual customer can demand from our network. As managers of that resource, we need that flexibility so that we can provide our subscribers with the most reliable, consistently excellent mobile on-line experience that our network will support.

The draft legislation is right to preserve a BITS provider's authority to "protect the security and reliability of its network and broadband transmission services," but it is not clear how this authority will be reconciled with the provider's duty not to block access to "any lawful content, application or service provided over the Internet," and to permit subscribers "to connect and use devices of *their* choosing." At least in the wireless environment, the "device" is in fact an extension of our network. In fact, under FCC rules, every one of our handsets, PDAs and air interface cards is licensed by the Commission and must comply with strict technical requirements. If we must allow customers to attach devices "of their choosing," how can we be sure that we comply with the terms of our FCC licenses? We are not talking about plugging fax machines onto a landline network but about devices with complex and dynamic functionality that not only manage the applications we sell but enable basic radio connectivity and participate with the network in managing RF power settings. We test and certify every device on our network with great care and diligence. This process cannot be abdicated to the consumer.

Consumers have multiple choices of wireless services as well as multiple broadband choices. In this context, there is no need to encourage consumers to second-guess the decisions of wireless network operators on how to run the network. We will respond to consumer demand for connectivity in the most efficient and effective ways available on our network. If we do not offer customers the features and capabilities they demand, they will "vote with their feet" and switch to a competitor. We are incented to provide the services that customers want.

The net neutrality provisions should not substitute for the incentives we and other wireless carriers have to serve consumers. Either such provisions are going to be too rigid and inflexible—discouraging innovation—or they are going to be too vague—leading to uncertainty and litigation. While the draft bill allows us to take "reasonable measures" to protect the security and reliability of our network, who is going to determine when a measure is "reasonable"? We thus recommend that Section 104 be modified to make clear that wireless BITS providers have the right to manage their network and the devices that can be used with that network.

6. Congress Should Make Clear that Wireless is To Be Subject to Federal Regulation.

While it is clear that we are trying to achieve the same result of a national deregulatory framework, it is our belief that we may be subject to an entirely new, uncertain, complex and re-regulatory regime. It would retreat from and reverse the deregulation that has so served the nation's economy and wireless customers. As creatures of a deregulatory environment, the simple thought of new regulatory compartments and obligations gives us pause. Verizon Wireless does believe that a national deregulatory regime for wireless is possible—and much simpler.

Now, more than ever, states are attempting to reassert utility-type regulation on the wireless industry. Ironically, at the same time the industry has been deploying national networks and offering national rate plans that offer unparalleled benefits for consumers, states threaten to undermine these benefits by imposing a patchwork of burdensome and inconsistent rules. Left unchecked, these re-regulatory efforts will force wireless carriers to follow different rules in different states and undo the benefits of deregulation—a result antithetical to Congress' goal in 1993. We have some states attempting to dictate the contents of our bills—an effort that will inevitably lead to varying, inconsistent requirements in different states. In 2005 alone, 18 states attempted to impose their own regulatory regimes on us. We have others attempting to control our rates, despite Congress' clear command in 1993 that the

market, not public utility commissions, should regulate rates. Still other states are not taking any action. Exclusive federal oversight and regulation, where necessary to protect consumers, is the right approach for the wireless industry.

Congress can simultaneously recognize the benefits of competition and prevent the harmful impacts of state-by-state regulation of a national industry by completing the deregulation began in 1993. The federal government is in the best position to oversee this national industry, which serves the public across and without regard to state lines. Verizon Wireless urges the Committee to clarify that the deregulatory provisions in Section 101 apply to all wireless services. This will help ensure that, as we and our competitors make further investments in national broadband services that benefit the public as they work and travel across the nation, we are regulated consistently, and at a national level.

Conclusion: The Committee took the first step in 1993. You have a unique opportunity to build upon that success. Verizon Wireless hopes that as your legislative process continues, you keep in mind the technical complexities of the wireless network and allow us the freedom to maintain our network resources and the ability to secure our network. We look forward to working with you in this process.

Mr. UPTON. Thank you. You are going to hear the buzzers ring here in a second. We are about ready to have three votes, so I think at this time—yes. That is right. I think we are going to take a short recess, and we will come back at 12:35. We will begin with Mr. Willner at 12:35.

[Brief recess.]

Mr. UPTON. I hope you got lunch.

Mr. WILLNER. No.

Mr. UPTON. We didn't either.

Mr. WILLNER. We are equally hungry.

Mr. UPTON. I would have said one if I had known those three votes would have taken a little bit longer. Mr. Willner?

STATEMENT OF MICHAEL S. WILLNER

Mr. WILLNER. Thank you, Mr. Chairman, and the rest of the members of the subcommittee, and thank you for inviting me to speak on behalf of the National Cable and Telecommunications Association. I am pleased to address the issues surrounding the BITS bill.

Ladies and gentlemen, I will remind you once again, it is the cable industry that has invested more than $100 billion to bring new and advanced 21st Century services to millions and millions of American homes, and we did so without any government handouts. We agree with you that new technologies like IP are changing the competitive landscape for all communication services. A fresh look at the regulatory framework established in 1996 is indeed in order, but we are concerned about the bill's technology specific focus.

If Insight's chief technical officer has to check with a barrage of regulatory lawyers before he decides to add new features and functions to our network, that would stifle innovation. If a technical design of our network determines how we are regulated, that will skew investment toward technologies that meet regulatory rather than marketplace demands. How is that good for consumers?

We believe that any review of current law should be guided by three basic principles. First, like services should be treated like, and all providers of those services should play by the same rules. What matters to consumers is not the technology used to provide services, but the services themselves. Second, there should be minimal economic regulation. Cable's investments in digital television,

broadband, and VoIP did not require the carrot of regulatory benefits, just the promise of new customers signing on for the service. And finally, we believe that local governments have an important role to play in ensuring that video service providers make services available to all citizens in a timely and fair fashion.

Unfortunately, the current draft creates different regulatory regimes for like services. Regulatory treatment would turn on whether a provider uses packet-switch transmission or not, whether particular offerings are—and I am going to quote—"subsumed in or subsuming" others, and whether a customer can "integrate" "customizable voice and data capabilities" with "two-way" video programming. You know, sitting here today, I don't think any of us in this room has the same idea of what all those terms mean.

There are two dangers with having the government picking technology winners and losers, particularly in a field as rapidly changing as telecommunications. The initial technology choice may be wrong, and government cannot anticipate what is just around the corner. For example, the FCC came close to mandating analogue high-definition television in the 1980's, and 30 years earlier chose a color television standard that was incompatible with existing black and white televisions before reversing itself. That probably significantly slowed down the development of color TV. 10 years ago, ATM and ISDN were hot transmission protocols, but mandating them would probably have prevented the rise of IP and today's Internet as we have grown to know it.

Technology is not relevant to drawing regulatory distinctions among multi-channel video distributors. Many of the services and features SBC identifies as IP-based are provided already by cable companies without using IP, including subscription video on demand, multiple camera angle viewing of live sporting events, live traffic, weather reports. Cable operators will undoubtedly increase the use of IP. We already use it in certain applications. But the competitive market, not the regulatory environment, should prompt that action.

The draft bill also creates more regulation at a time when competition should result in less regulation, adding three new silos to the existing ones for voice, video and data, means that providers could fall into 1 or more of 6 different regulatory categories. I am particularly concerned about the bill's first-time ever regulation of Internet access services in the form of net neutrality. In the absence of any evidence that cable operators have or are blocking customer access to content, a government mandate is indeed premature. The open-ended nature of this unnecessary mandate will definitely trap broadband providers into a morass of litigation for years to come.

The cable industry has always worked closely with this committee, and we stand ready to work with you to craft revisions to the Telecommunications Act that reflect not only today's realities, but also anticipates tomorrow's developments.

You know, I will tell you, as a cable operator in States like Indiana and Kentucky, you learn a lot about basketball, and one thing I have learned is that whether you are a Hoosier fan or a Cats fan, nothing makes both sides more angry than the referees deciding who is going to win the game. It should be the players on the field.

And with this draft, I am afraid that Congress is becoming dangerously close to wearing a black-and-white striped shirt—vertical striped shirt, as the referees in this game.

Thanks again for inviting me to testify. I will end it on that note.

[The prepared statement of Michael S. Willner follows:]

PREPARED STATEMENT OF MICHAEL S. WILLNER, PRESIDENT AND CEO, INSIGHT COMMUNICATIONS

Mr. Chairman and Members of the Subcommittee, thank you very much for inviting me to speak with you today on behalf of the National Cable & Telecommunications Association regarding the new discussion draft legislation addressing Internet Protocol (IP)-enabled and broadband services.

As you know, the cable industry has invested significantly—more than $100 billion since 1996 and nearly $10 billion this year alone—to bring advanced video, high-speed Internet access, and now voice services to tens of millions of Americans across the country. My own company, Insight Communications, has invested hundreds of millions of dollars upgrading and building systems in the last eight years. Broadband is virtually rolled-out to all areas served by the company. Four markets have circuit-switched telephone service and the rest are in the process of rolling-out IP telephony. Cable therefore has a fundamental stake in the ongoing efforts to revise the Communications Act.

The discussion draft is an ambitious effort to devise a national framework for advanced voice, video, and data services. NCTA agrees with you and others on the Committee that new technologies like IP are changing the competitive landscape for all communications services. The use of IP, for example, can facilitate true intermodal competition in all services. The transition from analog to digital video, while not yet complete, is already providing consumers with a more robust array of services and the ability to customize what they watch and when. Other technological developments will offer the ability to access content and information anywhere.

Given the scope and pace of these advances, it is appropriate to take a fresh look at the regulatory framework established in 1996—not in order to codify a particular technology as the touchstone of policy, but to reform and hopefully reduce regulation for all providers in way that does not impede future advances. With respect to multichannel video in particular, competition warrants a *comprehensive* re-examination of the existing regulatory framework adopted more than 20 years ago when the video marketplace was far less competitive.

While we agree that a fresh look at regulation is needed, we have serious concerns with the direction and approach of the draft bill. In particular, it treats functionally equivalent services differently, conferring a regulatory advantage on particular technologies. Rather than simply deregulate where market forces warrant, the bill erects a complex new scheme for IP-based and other "integrated" services. Regulatory treatment will turn on whether a provider uses packet-switched transmission or not; whether particular offerings are "subsumed in or subsuming" others; and whether a customer can "integrate" "customizable voice and data capabilities" with "two-way" video programming. The bill is also overregulatory, including first-time-ever regulation of the Internet in the absence of market failure that might justify that regulation.

The uncertainties inherent in this approach and the government micromanagement it invites are unlikely to provide the stable regulatory framework that promotes investment and innovation. By contrast, when Congress largely eliminated economic regulation of the cable industry in 1996 and largely got out of the way of our broadband deployment, cable responded with $100 billion in new investment and an array of advanced services that consumers have embraced.

PRINCIPLES FOR REVIEWING CURRENT LAW

We believe that any review of current law should be guided by three principles.

First, like services should be treated alike, and all providers of those services should play by the same rules. What matters to consumers, and what should matter to policymakers, is not the technology used to provide services, but the services themselves.

Second, there should be minimal economic regulation, allowing competition to rely on market forces wherever possible. The market has worked well to ensure that new developments enabled by technological advances and the integration of advanced services reach consumers. While the Bell companies have touted the integrated features they will offer if granted favorable regulatory treatment, cable offers those

services and features today—and did so as soon as the market showed interest, regardless of regulatory benefit.

For example, just last week, Sprint Nextel, Comcast, Time Warner Cable, Cox Communications and Advance/Newhouse Communications announced the formation of a joint venture, designed to accelerate the convergence of video, wireline, wireless and data communications products and services and bring exciting new capabilities to subscribers. Customers will be able to purchase a "Quadruple Play" or any combination of services, have access to a wireless "third screen," and enjoy other features that integrate cable and wireless services all on a single device. Time Warner customers in some markets today can have a caller ID flash on their television screens when they get a telephone call. Cablevision customers can check their home voicemail from any Internet connection in the world.

The market has responded well to the new services cable offers. There are over 26 million digital cable customers—up from 12 million in 2001. Upgraded cable systems can offer telephone service over the same cable line that already carries digital video, high speed Internet, and other advanced services to consumers. As of the end of the Second Quarter of 2005, major MSOs—including Insight, Cox, Charter, Comcast, Cablevision, and Time Warner, along with other cable operators—served approximately 4.4 million residential cable phone customers across the country.

These developments did not require regulatory prompting; they were driven by market demand. Companies facing fierce competition will respond to what consumers want, as providers continuously seek to differentiate themselves and their products and services. Their response should not be driven, or even affected, by a need to fit a service into a particular regulatory box. A regulatory scheme that successfully encourages innovation will not require providers to spend time debating which side of the line a service feature puts them on.

Finally, certain universally recognized social responsibilities must remain in place for all providers of communications services. In the context of voice services, those responsibilities include 911 and E-911, cooperation with law enforcement, and support for universal service within a competitively neutral regime. On the video side, new services and features should not be developed for, and available to, just the wealthiest subscribers—it should be an important part of the role of all providers to ensure that their service reaches every segment of society. While regulation should be no greater than what is necessary to ensure the fulfillment of those responsibilities—and there is room to make them consistent across providers—these important public protections should not be abandoned.

CONCERNS WITH THE DISCUSSION DRAFT

Measured against these objectives, the discussion draft raises a number of concerns.

First, the draft bill creates *different* regulatory regimes for like services based on technological distinctions. There are two dangers with having the government picking technology winners and losers, particularly in a field as dynamic as communications—the initial technology choice may be wrong, and government cannot anticipate what's around the corner. A technology-based approach creates a perverse incentive for providers to select the technologies they use based on a particular regulatory result even if they do not necessarily respond to consumer demand most effectively and efficiently, and it may lock them into particular technologies long after those technologies have outlived their usefulness.

It wasn't too many years ago, for instance, that this Committee was close to endorsing an *analog* version of HDTV that would have required as much as 12 megahertz of bandwidth for each video channel. Fortunately, digital technology emerged quickly enough to prevent enactment of that policy. Another example from history, this one involving a transmission technology, is perhaps even more relevant to the current effort. Ten years ago, asynchronous transfer mode ("ATM") was considered a primary protocol for networks (strongly promoted by the telephone companies), and IP was thought to be not as applicable for the transmission of data. If Congress had mandated ATM, it would have dramatically slowed the growth of the Internet, and IP's growth would have been hampered.

A more current example that shows the flaws of technology-based regulation is the use of IP to deliver video programming. Some have argued that IP video should be subject to a new regulatory regime, but the fact is that cable operators already use IP transport at various points in their networks, including cable modem service and backbone networks. There is no technical limitation to cable operators adopting IP technologies in their retail video services. Such services are being field tested by Time Warner in San Diego and are being studied by the engineering departments of all of the major multiple system operators, including Insight.

SBC has also proposed to use IP in its video distribution network, reportedly to transport and deliver video to the customer premises. At least in part, this appears to be a function of the limited bandwidth available to SBC over its existing copper facilities to transmit video to the home, which required SBC to find a means to deliver only a few channels at a time to the customer rather than all channels as cable has traditionally done. Significantly, many of the services SBC identifies as IP-based are being provided by cable companies today without using IP, including subscription video-on-demand service, multiple camera angle viewing of live sports programs, live traffic and weather feeds.

The point is that as it becomes useful to introduce IP (or any other new technology) into the distribution of video services, *all* providers, including current cable operators, will do so. The regulatory scheme should be structured to encourage, not interfere with, that natural progression. By contrast, a law that favors particular technologies over others will skew this progression and risks deterring innovation and undermining efficiency. Government should not be in the business of picking technology winners and losers. That should be left to the market.

The same danger arises if Congress anoints a particular service for favorable regulatory treatment, as the discussion draft does with broadband video. The features and functions that policymakers demand may not be the same ones that the marketplace wants. In the interest of favorable regulatory treatment, providers may end up devoting significant resources to developing services that consumers have no interest in. In that case, providers and consumers lose. The market, not the government, should drive the course of innovation and investment.

Second, the draft bill favors regulation over market forces. Indeed, it complicates the existing regulatory framework by adding three new regulatory "silos" in addition to the existing ones for voice, video, and data. Providers could fall in one or more of six different regulatory silos, each with different, and not always consistent, responsibilities. With regard to video, the bill's "broadband video service" would be the fifth category of multichannel provider—after cable, DBS, wireless cable, and open video systems—exacerbating rather than simplifying the current existing competitive imbalance among such providers.

With respect to broadband services, the bill appears to impose forced access obligations on facilities-based Internet access providers, overturning the Supreme Court's Brand X decision and the FCC's recent *Wireline Broadband Order.* Forcing facilities-based providers who have chosen not to hold themselves out as common carriers to share their facilities with competitors will deter investment in new networks. By interfering with the property rights of those providers, it also raises a significant takings issue. While perhaps inadvertent—the problem arises from the fact that the definition of BITS now encompasses both the offering of "pure" transmission as well as Internet access service—it is an issue that need not be reopened at all.

What is not inadvertent is the first-time-ever regulation of Internet access services themselves in the form of a "net neutrality" requirement. While the recent revisions to the bill, such as allowing BITS providers to take reasonable measures to protect network reliability, impose some limits on this regulation, there remains a grave danger that these regulations will lock providers into certain business or technology arrangements and hamper their ability to respond to market needs.

In particular, what constitutes "impair[ing]" or "interfer[ing] with" the use of content or services would be the source of constant litigation or the threat of litigation, creating a persistent and deadening overhang to the deployment of broadband services. Anyone unhappy with the terms of their business deal with a broadband provider would inevitably race to the FCC or the courthouse alleging a violation. Given the inherent open-endedness of concepts like "impairment" or "interference," a provider would have no way of knowing whether the practice complained of will be found to be reasonable or an instance of unlawful interference. Under such a scheme, providers will have little incentive to innovate or to differentiate themselves in the marketplace.

The fact is that nearly everyone in the industry engages in some activity that arguably would fall under the bill's definition of "interfer[ence]" with content or access. For example, several years ago, in an effort to discourage the posting of commercial messages ("spam") on its multiple message boards, Yahoo! adopted a policy of blocking access to Web addresses advertised in spam messages. While some viewed this as a consumer-friendly move, others suggested that Yahoo!'s motive was to hinder competitors—and, in fact, Yahoo acknowledged that "some of the Web sites . . . blocked from its finance section [were] competitors." Yahoo! and other web portals also have agreements with certain content providers to feature their content or links to particular sites. Microsoft requires people to use Internet Explorer to view streaming video on its MSNBC web site. If the government installs itself to

police these kinds of business arrangements, it will seriously compromise the ability of network and content providers to devise new offerings and respond to market demands.

Finally, with respect to matters where continued regulation is necessary, particularly in the area of interconnection between new broadband networks and the public switched network, the staff draft does not provide sufficient safeguards. While the cable industry generally supports reducing regulation, the public switched network presents a special case: since the vast number of voice customers will use that network for the foreseeable future, no voice competitor can be successful unless its subscribers can terminate calls to that network and receive calls that originate on it.

There is, very simply, nothing quite like the public switched network. DBS operators did not need to interconnect with cable systems to compete (Congress did conclude that they needed access to cable programming, however), and the "network of networks" architecture of the Internet is distributed rather than centralized. So long as the PSTN maintains its unique position for voice services, however, the Bell companies who control it will have a correspondingly unique incentive and ability to frustrate competition by impeding interconnection with other voice providers, regardless of whether those providers use IP or some other technology. New entrants, by contrast, lack the incumbents' customer base and bottleneck control. As Congress recognized in 1996, interconnection with the incumbents must be available on just, reasonable, and nondiscriminatory rates, terms, and conditions if broadband competition is to succeed.

AN ALTERNATIVE APPROACH

The starting point for reform of our communications laws should be to identify the problem that needs to be fixed and then to develop a focused response. Legislation focused on IP or any other particular technology sidesteps this fundamental question and, as I've suggested, will skew investments and inevitably become obsolete.

The communications marketplace is changing before our eyes, almost weekly. Entrepreneurs, inventors, service providers, and investors are not waiting for legislation to point the way to the next big thing. What is needed is a regulatory framework that recognizes these changes—and the sheer pace of change—by streamlining existing law where there is competition and by giving the FCC the tools to adapt the remaining requirements to new competition as it develops. The current environment offers the opportunity to reexamine and reevaluate all current regulation of voice, video, and data and remove barriers or burdens that are unnecessary because of the enhanced competition that IP and other technologies make possible.

For those regulations deemed necessary to retain at this time, legislation could set a clear path for their reexamination and removal as they, too, become outmoded. The FCC's forbearance authority could be extended beyond telecommunications services and the Commission could be required to forbear from all unnecessary regulation, taking into account competition from functionally equivalent offerings, regardless of technology or regulatory classification. Of course, any new framework should also ensure that providers continue to fulfill important social responsibilities.

We believe that this approach, designed to reflect the new competitive world and grow with it, would far better serve the needs of competitors and consumers than the approach suggested in the draft bill. To the extent the Committee intends to pursue the approach outlined in the draft bill, however, we would offer the following input about the draft provisions.

SPECIFIC COMMENTS ON THE BILL

Above I outlined our general concerns with the discussion draft. More detail on each of these concerns follows below.

Like Services Are Not Treated Alike

As noted above, we have serious concerns with subjecting services that are functionally the same to different—and in some cases, very different—regulatory treatment. The draft bill is built on technology-specific distinctions that may not have real relevance in the marketplace or enhance competition or functionality. By way of example:

- packet-switched transmission is subject to the bill, while circuit-switched transport is subject to existing law;
- the definition of "packet-switched service" appears to require the separate routing of every packet, but not all packet-based protocols perform routing functions for every packet;

- requirements applicable to a BITS provider are limited to facilities-based providers, placing such providers at a competitive disadvantage vis-à-vis non-facilities-based broadband providers, such as Microsoft, Yahoo!, eBay, and other "edge" providers (in addition to Earthlink and other ISPs), who are mounting competitive challenges to facilities-based communications providers;
- the bill excludes "any time division multiplexing [TDM] features, functions, and capabilities" from the definition of BITS, even when the service (such as cable modem, DSL and FTTH) utilizes TDM and TCP/IP;
- there are different interconnection rules for VoIP providers and providers of conventional telephone service; and
- the bill foresees the use of "successor protocol[s]" only to "TCP/IP", but TCP is only one of many IP protocols.

In each of these cases, there does not appear to be any rational basis for selecting only certain IP technology for favorable treatment, when the service being provided may or may not benefit from that technology and the subscriber may or may not even know it is being used. We believe the bill should eliminate such distinctions.

Similarly, under the draft bill, broadband video service must be offered in a manner that allows subscribers to "integrate" the video aspects of the service with "customizable, interactive voice and data features," even if a subscriber never uses these features and receives only video programming service that looks exactly like a cable service. The draft bill also removes certain obligations only from broadband video service, rather than consider whether they no longer make sense for any provider of multichannel video.

Many of NCTA's members may already be offering "broadband video service" as it is currently defined and would therefore qualify for and benefit from some or all of the bill's favorable regulatory treatment. As noted above, some cable systems have integrated their video and telephony service features to allow television viewers to receive caller ID on their television screens.

Whether or not a cable company's offering meets the definition of broadband service—and the myriad undefined attributes of this service make it impossible to know for sure—we do not believe the bill's approach provides a sound foundation. While it is true that all "broadband video service providers" would be treated the same, in fact broadband video providers would be treated differently from cable operators against whom they compete solely on the basis of technological distinctions like the "integration" of "customizable, interactive" voice and data features. Even if customers forgo those features in favor of multichannel video that is functionally indistinguishable from cable service, the broadband video service provider retains its regulatory advantage over a cable operator.

In an industry as dynamic as video, moreover, technology-based distinctions will rapidly become obsolete. Any new legislative framework should be able to guide industry and government through changes in technology. The discussion draft, by contrast, will likely need to be amended even before it passes into law to account for new development that will inevitably emerge in the coming months. Competitive forces should and will propel providers to use the technologies that enable them to offer the services and features consumers want. Government interference in that natural process is far more likely to hinder than encourage this result.

The Bill is Overregulatory

We also believe the draft bill unnecessarily imports too much traditional utility regulation to competitive broadband services. It imposes numerous requirements on VoIP, BITS and broadband video services even where the competitive need to attract customers to these new services has proven sufficient to discipline competitors' conduct, and no market failure justifies a change in regulatory treatment. While the consumer protection standards in the discussion draft have been narrowed, for instance, they remain overbroad. The result is the imposition of extensive new and burdensome regulatory requirements for services that have flourished without government involvement and without any demonstration of market failure. Truth-in-billing and other requirements—many of which have served as vehicles for unwarranted class action lawsuits—are unnecessary, particularly if providers remain subject to State laws of general applicability. In some cases, such as the bill's privacy and disabilities' access requirements, the draft imposes even stricter standards on broadband providers than those imposed on traditional providers.

By defining BITS to include Internet access service, moreover, the bill would impose these obligations, along with federal registration obligations and other utility-style requirements designed for monopoly common carriers, on facilities-based Internet access providers such as cable who only recently won the right to be free from regulation.

By far the most extreme example of unnecessary regulation, however, is the imposition of so-called "net neutrality" requirements on BITS providers. As discussed above, we believe the net neutrality requirement is a solution in search of a problem and would represent an unprecedented regulation of Internet services. Cable operators are not blocking consumers' access to Internet content, applications, or services or restricting the attachment of customer equipment. Although there have been claims that cable could use control of its broadband network to act anticompetitively, there has been only a single unproved allegation that a cable operator has done so. The cable broadband network is also designed to accommodate any gaming devices, or any other computing device the customer wants to use. Cable companies have no incentive to block content, applications, or services and thereby drive customers to DSL, satellite broadband, or other competitors waiting in the wings.

The harm to society from a net neutrality requirement would vastly outweigh any potential benefit. Requiring cable operators to offer cable Internet service in a particular way may lock them into business or technology arrangements that prevent them from responding to customers' changing interests or marketplace reality. As I explained earlier, a broad requirement "not to block, impair, or interfere with the offering of, access to, or the use of any lawful content, application, or service" will open the door to a constant stream of complaints from cable's competitors dissatisfied with the terms of proposed business arrangements and seeking to use government involvement as leverage in their negotiations with cable companies.

Nearly every commercial arrangement between facilities-based Internet service providers and Internet content providers could be challenged as "impairing" access to competing content, effectively precluding cable operators from enhancing the value of their Internet access service. Hearing and resolving complaints would tie up scarce government resources and impose substantial uncertainty in the industry at the time when it needs regulatory stability to develop this new business.

If the requirement that providers allow subscribers to "connect and use devices of their choosing in connection with BITS" is retained, the bill should clarify that the subscribers' right is limited to, for example, the right to connect any device to the cable modem and does not allow uncertified cable modems or other uncertified devices to be connected directly to the cable network. Manufacturers of devices that connect to a cable modem must bear a reasonable responsibility to ensure that their equipment evolves and is compatible with new network technologies such as VOIP. Networks cannot and should not be required to evolve—or hold back on use of a new technology—to suit the specifications of individual equipment manufacturers.

The discussion draft could also be read to impose new and unnecessary interconnection obligations on any cable operator that offers cable modem service, requiring them to agree to interconnection demands from telecommunications carriers and private (BIT) networks, as well as other BITS providers. Without any government mandate, cable operators have entered into peering arrangements to enable their cable modem customers to reach any site or person on the Internet. There is no need to turn this market-driven practice into a government mandate or to require cable operators to interconnect their broadband facilities to every other network.

The Bill Lacks Adequate Safeguards Against the Exercise of Market Power

While overregulatory in certain regards, in other respects the discussion draft omits critical safeguards. In particular, the bill eliminates many of the regulations that were instituted specifically because competition proved insufficient to protect against the unfair exercise of market power, even where market conditions have not yet changed in a manner that would justify a change in law. For example:

- The bill does not require incumbent carriers that control Internet backbone facilities to provide access to those facilities on a just, reasonable and nondiscriminatory basis. Telephone companies that both control Internet backbone facilities and offer retail Internet access in competition with cable operators have the incentive and the ability to discriminate against cable operators in the rates, terms, and conditions under which Internet backbone service is provided.
- The bill does not ensure that VoIP providers can interconnect with an ILEC at any technically feasible point.
- The bill does not ensure that VOIP subscribers' listings will be included in the ILEC directories (including those of independent telephone companies as well as the Bells).
- The bill lacks clear standards for facilities-based VoIP providers to interconnect with ILECs or provide any meaningful government oversight of these interconnection negotiations. ILECs will continue to provide service to the vast majority of households for the foreseeable future. Without standards and a supervisory mechanism in place, ILECs will have every incentive to delay or impede

negotiations for the exchange of traffic with VOIP providers. The elimination of oversight by the FCC or State Commission heightens this danger even further.

- The bill does not guarantee VOIP service providers' right of access to pole attachments at nondiscriminatory rates, terms and conditions.

Nor does the bill provide for effective enforcement of the prohibition on redlining practices by BVS providers, despite indications that some competitors seeking to enter the market intend to deploy service based on the income of area residents. By placing the obligation on the FCC to oversee and resolve every allegation of local redlining by a broadband video service provider in every municipality in the country, the bill effectively frees BVS providers of any oversight, since the FCC clearly is not equipped with staff or resources to undertake such a role. Complaints would not be resolved in a timely manner, allowing the provider ample opportunity to benefit significantly from its discriminatory policies. Further weakening the prohibition is the fact that the bill allows providers to self-define their own service areas, allowing them to cherry pick wealthy communities for their service rollout.

We urge the Subcommittee to consider the important role that local governments can play in overseeing the deployment of multichannel video systems. While the discussion draft preserves local authority over rights-of-way, local governments should also be able to ensure that all of their citizens receive service in a timely and fair fashion, that services meet community needs, and that customer service standards are met.

As a Whole, the Bill Creates Substantial Regulatory Uncertainty

The sheer scope of the discussion draft and the undefined nature of many of its core provisions mean that, if enacted, it will inevitably result in protracted legal battles, significantly diminishing the likelihood that the bill will succeed in its goal of successfully moving communications policy into the Internet era. In many aspects, the bill actually appears to be a step backwards.

For example, as noted above, the bill seems to overrule both Brand X and the FCC's recent DSL order by subjecting BITS providers to a forced access requirement. The cable and Internet access industries have only just finished years of litigating this issue. Likewise, the telecommunications industry has just finished years of litigating the UNE and interconnection provisions of the 1996 Act. Communications companies cannot focus resources and efforts on developing new services and technologies when the regulatory bar keeps changing. They cannot face ten more years of litigation. Any rewrite must make it the highest priority to provide clear guidance and regulatory stability, so that all industry members may take the necessary steps to bringing new offerings to consumers.

Thank you again for the opportunity to appear before you today. The cable industry stands ready to work with you and your colleagues to craft revisions to the Communications Act that reflect today's realities and tomorrow's developments. I look forward to your questions.

Mr. UPTON. Mr. Yager?

STATEMENT OF JAMES YAGER

Mr. YAGER. Thank you, Mr. Chairman, Mr. Markey, and members of the subcommittee. I am here today on behalf of the National Association of Broadcasters, and as the owner and operator of 5 mid-sized television stations in markets like Flint, Michigan; Quincy, Illinois; Columbia-Jefferson City, Missouri; and Amarillo, Texas.

Television broadcasters believe that technology and business models being discussed today will inject much needed competition into the multi-channel video marketplace. Enhanced competition will give broadcasters new platforms for distributing their local programming. That is good for our viewers and good for your constituents. It gives them more options. So we support the committee's effort to spur competition.

However, as the committee moves forward, we urge you to be mindful of your long standing goal of promoting localism by preserving a vibrant system of free over-the-air local television. I don't think anybody disagrees, local television is part of the very fabric

of communities across this country. Viewers rely on our stations for local news, sports, weather and political coverage. Before, during and after disasters, over-the-air television provides a lifeline of emergency information. So as Congress develops the ground rules for IP video, the policies that promote localism today should also govern the relationship between broadcasters and video over broadband providers. When Congress enacted the 1992 Act, it was concerned that video distributors have an incentive to delete, reposition, or even refuse to carry local stations. Congress also acknowledged that a vibrant over-the-air system requires access to cable households. With these concerns in mind, Congress crafted the current must-carry retransmission consent system.

This two-sided coin has strengthened localism. The must-carry rules guarantee that even the smallest station in the most remote market is not blocked out of cable households. The flip side of the coin is retransmission consent. It recognized that cable operators derived great benefits from local broadcast programming. So the 1992 Act gives stations the option to negotiate carriage terms with cable operators. Together, the retransmission consent and must-carry laws have been a win-win for both viewers and for local television. It therefore makes sense that must-carry and retransmission consent should be applied equally to video broadband providers.

Other rules are important to localism and also must be preserved. Congress has long recognized network affiliate stations rights to be the exclusive provider of network programming in their markets. Congress and the Commission have acknowledged the importance of stations' exclusivity for syndicated programs. Local advertisements sold by stations during network programming, like 60 Minutes, or Lost, and during syndicated programming like Oprah Winfrey, fund local programming, and local news, and local weather, and local sports.

Mr. Chairman, as NAB testified in April, Congress developed this framework to ensure that cities as large as New York and as small as Marquette, Michigan, can have their own unique broadcast voices. Unfortunately, the staff draft would put these principles in continual jeopardy by requiring that rules be reviewed unnecessarily and potentially rolled back every 4 years. Why do laws like must-carry that Congress enacted in 1992, that have been reaffirmed not once, but twice, by the Supreme Court, and that have benefited millions of viewers, suddenly need to be defended every 4 years? This will only inject uncertainty into the market and unduly harm viewers.

The notion that the FCC might repeal retransmission consent while leaving in place the cable compulsory license is particularly troublesome to broadcasters. Absent retransmission consent, a video transmission would simply take a broadcast signal and profit from it. Meanwhile, the government would set the rate by which the broadcaster is compensated, and the station would never have the opportunity to negotiate its carriage terms. Under the staff draft, broadcasters would face this specter every 4 years.

Setting aside the 4 year review process, the staff draft has other shortcomings. Many of the ground rules that apply to cable, like must-carry and retransmission consent, are in statutory form. The

staff draft orders the FCC to create supposedly parallel rules for the new broadband services, but a statute is a statute and a regulation is a regulation, and we all know statutes are much stronger than regulations. They provide certainty. What is in statute for cable should also be in statutory form for the new video distributors.

Mr. Chairman, our industry and your constituents stand to gain much through enhanced competition in the video distribution market. We are ready to work with the committee in achieving that goal, while simultaneously strengthening America's system of free local over-the-air television. Thank you.

[The prepared statement of James Yager follows:]

PREPARED STATEMENT OF JAMES YAGER, CHIEF EXECUTIVE OFFICER, BARRINGTON BROADCASTING COMPANY

Thank you, Mr. Chairman, for the opportunity to appear before the Subcommittee on Telecommunications and the Internet today. I am James Yager, Chief Executive Officer of Barrington Broadcasting Co., testifying on behalf of the National Association of Broadcasters (NAB). NAB is a nonprofit incorporated association of radio and television stations and broadcast networks, which serves and represents the American broadcasting industry.

The television broadcast industry is pleased to be testifying about the proposed legislation, which is intended to encourage the deployment of new and innovative Internet services such as broadband video services. Broadcasters see great promise in what this new video distribution platform will offer. Broadband video services have the clear potential to introduce much needed competition into the multichannel video programming distribution market. We generally see this as a positive development for consumers, broadcasters and other program providers.

As we embrace new technologies, however, it is vital that the legislation adopted continues to recognize the fundamental policy of localism that underlies our American broadcasting system and the importance of maintaining a robust system of local, over-the-air television. Congress, the Federal Communications Commission (FCC) and the courts have all explicitly recognized that public access to healthy, free over-the-air broadcasting is an important federal interest. For this reason, NAB submits that long-standing policies designed to promote localism, competition and diversity—including carriage and retransmission consent for local broadcast signals and the protection of local program exclusivity—must extend equally to all multichannel platforms. The proposed legislation needs to ensure that broadband video service providers are subject to requirements in these areas truly comparable to the requirements already applicable to other multichannel video programming distributors (MVPDs), such as cable and satellite operators. As presently drafted, however, the legislation fails to ensure that these important policies apply to new broadband service providers in the same manner as they apply to other MVPDs. The legislation also opens the door to premature elimination of these still needed national policies. NAB urges that the legislation be amended to correct these specific, limited problems.

The Deployment of Broadband Video Services Has the Potential to Benefit Consumers and Programming Providers, Including Broadcasters.

Television broadcasters generally support efforts to speed the deployment of new and innovative Internet services, including broadband video services. Particularly in light of continuing consolidation and increasing national and regional competition in the cable industry,[1] a new video distribution platform offers great promise. Broadband video services have the clear potential to introduce much needed competition into the MVPD marketplace. We see this as a positive development for consumers, broadcasters and other program providers.

Consumers may benefit from the development and deployment of another, competitive distribution platform capable of bundling a variety of services, including voice, Internet access and video services. With regard to video services especially,

[1] In June 2004, the four largest cable operators served about 58 percent of all U.S. cable subscribers. Eleventh Annual Report, *Annual Assessment of the Status of Competition in the Market for the Delivery of Video Programming,* 20 FCC Rcd 2755, 2763 (2005) ("Eleventh Annual Report"). This consolidation will only increase in the future, as Comcast and Time Warner are acquiring Adelphia's systems.

past studies have shown that competition from satellite providers has not been effective in restraining price increases for cable television. For example, the General Accounting Office (GAO) found that cable rates in markets with competition from a provider using a wire technology (such as local telephone company) were about 15 percent lower than cable rates in similar markets without wire-based competition. Competition from satellite operators did result in improved quality and service, but did not result in a significant lowering of cable television rates.[2] The deployment of a new, competitive MVPD service may also benefit consumers by providing additional, diverse programming options.

Video programming providers, including broadcasters, may also benefit from the timely deployment of a new video distribution platform. The emergence of another platform for the distribution of video programming will provide programmers with an additional outlet for reaching viewers and therefore with greater opportunities for success in the marketplace. Some cable programming networks and regional sports networks have recently expressed concern to the FCC that large, consolidated cable operators are increasingly able to exclude independent programming networks from their systems and, thus, from the marketplace.[3] The rapid deployment of a competitive video distribution platform could help ameliorate such problems.

Local television broadcasters may also similarly benefit from the emergence of another competitive MVPD service. A new video distribution platform will represent another outlet for broadcast programming, including local news and information. Given broadcasters' dependence on advertising revenue (and thus on reaching as many viewers as possible), the expansion of our opportunities for reaching consumers should be regarded as positive. The development of another video distribution platform for carrying broadcast programming would also encourage the development of innovative digital television programming, including multicast and high definition (HD) programming. If local stations feel confident that their HD and multicast programming will be carried by broadband video providers, broadcasters will be encouraged to make the substantial investments needed to bring their multicast service plans to fruition. In the end, it is consumers that will benefit by receiving a greater variety of programming, including local programming, from multicasting broadcast stations via a broadband service provider.

Policies Necessary for Preserving Free, Over-the-Air Local Broadcasting Must Apply in the Same Manner to All MVPDs.

As NAB has testified in the past, our American television system is an important part of our national identity.[4] Unlike other countries that offer only national television channels, the United States has succeeded in creating a rich and varied mix of local television outlets that give individual voices to more than 200 communities. But, local over-the-air TV stations—particularly those in smaller markets—can survive only by generating advertising revenue based on local viewership. If new technologies can erode local viewership by overriding program exclusivity rights of local stations and offering the same programs on stations imported from other markets, or effectively block their subscribers' access to local signals, the viability of local TV stations—and their ability to serve their local communities with high quality programming—could be lost.

Over the past decades, Congress and the Federal Communications Commission have adopted and maintained certain requirements on MVPDs to preserve localism and local station program exclusivity. These are the principles that underlie the policies of syndicated exclusivity, network non-duplication, must-carry and retransmission consent.[5] As Congress has recognized, and the Supreme Court has upheld, preservation of our system of broadcasting is "an important governmental interest."[6]

---

[2] GAO, *Issues Related to Competition and Subscriber Rates in the Cable Television Industry,* GAO-04-8 at 9-11 (Oct. 2003). In 2004, the FCC reported, in markets where cable operators faced effective competition from wireline overbuilders, the average monthly cable rate and price per channel were, respectively, 15.7 percent and 27.2 percent lower than those averages for cable operators in communities without effective competition. Eleventh Annual Report, 20 FCC Rcd at 2773.

[3] *See, e.g.,* Petition to Deny of America Channel, LLC, MB Docket 05-192 (filed July 21, 2005); Petition of TCR Sports Broadcasting Holding, LLP to Impose Conditions Or, in the Alternative, to Deny Parts of the Proposed Transaction, MB Docket 05-192 (filed July 21, 2005).

[4] *See* Attachment, Testimony of Gregory Schmidt, Vice President of New Development and General Counsel for LIN Television Corporation, on behalf of NAB, before the House Commerce Committee, April 20, 2005 (NAB Testimony).

[5] *See* NAB Testimony, pp. 3-10.

[6] *Turner Broadcasting System, Inc. v. FCC,* 512 U.S. 622, 662-63 (1994).

Earlier this year, NAB explained in other congressional testimony why must carry, retransmission consent and local program exclusivity are more necessary than ever to maintain our system of locally-based, free over-the-air broadcasting and why these policies should be applied to new technologies such as video over broadband.[7] Since that time, the FCC has again recognized the importance of the retransmission consent and program exclusivity policies and recommended to Congress that no changes be made.[8] NAB incorporates that testimony and reemphasizes here today that these long-standing requirements that apply to traditional MVPDs such as cable and satellite operators should apply in a comparable manner to new platforms that provide comparable video services.

The Proposed Legislation Fails to Apply Vital Regulatory Policies Comparably to Video Broadband Providers and Permits the FCC to Eliminate Long-Standing Policies Necessary to Preserve Our System of Broadcasting.

Section 304 of the proposed legislation purports to apply certain video regulations (including must carry, retransmission consent and program exclusivity) to broadband video service providers in a manner comparable to other MVPDs. As drafted, however, the legislation does not ensure that broadband video providers offering an MVPD service functionally equivalent to the services currently provided by cable and satellite operators will in fact be subject to comparable requirements. As drafted, the legislation prematurely gives the FCC broad discretion to eliminate, with regard to video broadband providers, long-standing policies necessary to preserve our system of free, locally-based over-the-air broadcasting. It also may unintentionally grant authority to the FCC to undercut current statutory requirements on cable and satellite providers.

As an initial matter, NAB notes that Section 304(a)(1) of the legislation directs the FCC to "adopt for broadband video service providers comparable regulations as apply to" MVPDs in a variety of areas, including must carry and retransmission consent. This language would create a disparity in that certain requirements (such as must carry and retransmission consent) will only be regulatory requirements for video broadband service providers, while these are statutory obligations for cable operators.[9] Regulatory requirements are clearly not comparable to statutory requirements. It could be argued that the FCC could waive such a regulatory requirement, while it may not, of course, waive any statutory requirement adopted by Congress. Thus, the FCC could possibly waive important policies such as must carry on the request of a video broadband provider without appropriate Congressional input, while Congressional action is clearly necessary to alter such requirements for a cable operator. This cannot be deemed to constitute "comparable" regulation. To correct this inconsistency in regulatory treatment, the legislation should make statutory for broadband video providers any requirement that is statutory for other MVPDs.

Another provision of the draft legislation is even more troubling. Section 304(a)(2) permits the FCC to eliminate any of the regulations applicable to broadband service providers (including must carry and related policies) adopted pursuant to Section 304(a)(1) of the legislation.[10] This provision will give the FCC virtually unfettered authority to overturn policies that Congress has previously determined to be essential for preserving the benefits of free, over-the-air local broadcasting (especially for those who do not subscribe to an MVPD); for promoting widespread dissemination of information from a multiplicity of sources (particularly sources, such as broadcasters, not under the control of cable operators); and for promoting fair competition in the market for television programming.[11] While competition may eventually be sufficient to warrant some deregulatory modifications, it is not so evidently on the horizon that Congress should hand over its oversight of these important obligations to the FCC. To prevent the FCC from exercising this amount of undue discretion,

---

[7] NAB Testimony, pp. 2-12.

[8] Report of the FCC, *Retransmission Consent and Exclusivity Rules: Report to Congress Pursuant to Section 208 of the Satellite Home Viewer Extension and Reauthorization Act of 2004* (Sept, 8, 2005).

[9] *See* 47 U.S.C. §§325, 534, 535.

[10] Specifically, Section 304(a)(2) requires the FCC to review these regulations applicable to video broadband providers every four years and directs the FCC to eliminate those regulations to the extent the FCC determines they are no longer necessary as the result of economic competition.

[11] *See Turner,* 512 U.S. at 662-63 (finding that Congress adopted must carry to serve these three important governmental interests).

the "quadrennial review" requirement in Section 304(a)(2) should be eliminated from the legislation.[12]

In addition, this legislation may unintentionally allow the FCC in the future to eliminate requirements such as must carry, retransmission consent and local program exclusivity even with regard to other MVPDs, such as cable operators. As cable operators continue to upgrade their facilities so they can offer broadband Internet services, two-way services and/or interactive services, they may arguably fall under the definition of a "broadband video service provider" in Section 2(a). In such case, Section 304(a)(2), which permits the FCC to eliminate regulations adopted for broadband video service providers, would potentially allow the FCC to eliminate the long-standing requirements regarding must carry, retransmission consent and program exclusivity even for those providers traditionally regarded as cable operators. This loophole could therefore undercut express statutory requirements for must carry and retransmission consent that Congress adopted for cable operators in 1992 in order to preserve our system of free, locally-based television broadcasting. The legislation should be amended so that cable operators cannot simply recategorize themselves as broadband video service providers and thereby do an end run around long-standing policies that Congress and the Supreme Court have recognized as important.

Conclusion.

Broadcasters see great potential in the development of broadband video services to increase competition in the MVPD marketplace, thereby benefiting consumers, broadcasters and other program providers. However, in seeking to encourage the more rapid deployment of broadband video services, Congress should extend to this new multichannel platform long-standing policies that have successfully promoted competition and diversity in the video market for many years. As presently drafted, the proposed legislation fails to apply policies vital for the preservation of locally-based, free over-the-air broadcasting (including carriage and retransmission consent for local broadcast signals and local program exclusivity) to new broadband service providers in the same manner as they apply to other MVPDs. The legislation even permits the FCC unduly broad discretion to eliminate must carry and related policies that Congress has long believed were needed to maintain our system of television broadcasting. NAB urges the Subcommittee to amend this legislation to correct these specific, limited problems.

Mr. UPTON. Mr. Yager, I know you have been here before, which is why you were right on 5 minutes. It was perfect.

Mr. YAGER. Thank you, sir.

Mr. UPTON. Thank you. At this point, we are going to do questions from the panel. Again, I am going to be—try to be pretty honest with this—yes. Ms. Praisner, I know that there is not a copy of the draft, I don't think, in front of you——

Ms. PRAISNER. There is.

Mr. UPTON. Oh, there is? Okay.

Ms. PRAISNER. Yes, sir.

Mr. UPTON. Well, I want to talk a little bit about the franchise fees, which, of course, get passed along to the consumer on their monthly bills.

Ms. PRAISNER. Right.

Mr. UPTON. If you look at the staff draft on page 30, beginning at line 14, Section 303d, as in David, it says this, "franchise fee assessment by local franchising authority permitted. The local fran-

[12] NAB also notes that, in other contexts, quadrennial review requirements have not lead as expected to the elimination of regulations made unnecessary by increased competition, but has instead lead to extensive legal challenges of FCC actions and almost permanent legal uncertainty for communication service providers. For example, the FCC attempted, as statutorily required, to review the broadcast multiple ownership rules in 2002, but its revised rules were challenged in court. Most of these revised rules have consequently not gone into effect, but have been sent back to the FCC for further consideration and explanation. The FCC has not yet even begun this consideration of its 2002 review on remand, but is required by statute to conduct a new quadrennial review in 2006. There is no reason to believe that a quadrennial review process in the context of broadband service providers would operate any more efficiently or effectively.

chising authority may collect a franchise fee from a broadband video service provider for the provision of broadband video service within the local franchise area of such authority. Amount (2), for any 12-month period, such franchise fee shall not exceed 5 percent of such broadband video service providers gross revenues in such period from the provision of broadband video service to subscribers in such local franchise area." And if you skip down to line 31, line 10, it continues—the draft continues, it says, "Definition of Gross Revenues." Maybe—I don't know if you have found it.

Ms. PRAISNER. Page 31.

Mr. UPTON. Page 31, now, line 10.

Ms. PRAISNER. Uh-huh.

Mr. UPTON. It says, "For purposes of this subsection, the term gross revenues means all consideration of any kind or nature, including, without limitation, cash, credits, property"—means a lot—"in-kind contributions (services or goods) collected from the subscriber and attributable to the video programming package provided by the broadband video service provider as part of the broadband video service in such local franchising area." Now, based on what I just read, yes or no, would you acknowledge that the staff draft preserves by its very term the local franchising authority to collect 5 percent of gross revenues collected from the subscriber that is attributable to the video programming package part of the broadband video service offering? Does it not say that? Yes or no.

Ms. PRAISNER. It says that for the piece that it allows us to collect, but it does not allow that 5 percent to extend to all of the areas in which, under the cable franchises that we have now, there is the capacity to collect. So there isn't the advertising fees, the Home Shopping Network fees, whatever those——

Mr. UPTON. Property, in-kind contributions, cash, credit, et cetera. Let me talk about the PEG issue for a second.

Ms. PRAISNER. Okay.

Mr. UPTON. Again, I would like you to read along with me, since you have got it there, from the text. On page 34, beginning at line 21, it talks about PEG, Public, Educational, Governmental use. "Local franchising authority may designate broadband video service provider capacity for public, educational or governmental use in the local franchising area so long as such use is comparable to the obligations the local franchising authority applies, (1) to any cable operator in such local franchising area, and (2) in any other broadband video service provider in such areas." So, again, yes or no, based on what I just read, would you at least acknowledge that the draft does, by its very terms, permits a local franchise authority to designate capacity for PEG from a broadband video service provider which is comparable to that which a cable operator in the local franchise area is also providing?

Ms. PRAISNER. Yes, it——

Mr. UPTON. Okay.

Ms. PRAISNER. [continuing] provides for PEG channels.

Mr. UPTON. Finally, I would like to talk a little bit about the rights-of-way management. Once again, if you read on page 61——

Ms. PRAISNER. Uh-huh.

Mr. UPTON. [continuing] starting at line 11, it says this, "Use of rights-of-way and easements: in using public rights-of-way and easements that have been dedicated to compatible uses, a BITS provider, a VoIP service provider, or a broadband video service provider, shall ensure that, (1) safety, functioning and appearance of the property and the convenience and safety of other persons not be adversely affected by the installation or construction of facilities necessary for such service. (2) The cost of installation, construction, operation, relocation or removal of such facilities be borne by such provider or subscriber to such provider's service, or a combination of both, and (3) the owner of the property shall be justly compensated for any damages caused by the installation, construction, operation, relocation, removal of such facilities by such provider. (B) Preservation of Authority. No provision of this title shall be construed to prohibit a local franchise authority already—or other unit of the State or local government—from (1) enforcing the requirements of paragraphs 1, 2, and 3, (2) from imposing reasonable restrictions, and on time, place or manner by which provider constructs, alters, or maintains facilities that use public rights-of-way and easements." Question, again yes or no, based on what I read, would you acknowledge again that this staff draft does by its very terms preserves the local franchises' authority right to control the use of rights-of-way, including as it relates to safety, functioning and the boiler plate language that has been there before?

Ms. PRAISNER. I am sorry, Mr. Chairman.

Mr. UPTON. Does it not?

Ms. PRAISNER. On that issue, I have to say no. I do not believe——

Mr. UPTON. Well——

Ms. PRAISNER. [continuing] and perhaps it is a clarification of language that is necessary. And, again, we would be more than willing, as I indicated, to discuss this. But, if you look on lines 15 and 16——

Mr. UPTON. Okay.

Ms. PRAISNER. [continuing] it says, as we read this—and as I say, it may be that the language needs to be tweaked, and we are happy to talk with you, but it says the video service provider shall ensure. It seems to me that that leaves an impression that the determination of what is safety, functioning and appearance, et cetera——

Mr. UPTON. But it——

Ms. PRAISNER. [continuing] but——

Mr. UPTON. My time is expiring, but especially we added this provision that says that the local franchise authority, or other unit—it does—"no provision shall be construed to prohibit a local franchising authority, or other unit, from enforcing requirements" of that paragraph of subsection A.

Ms. PRAISNER. Well——

Mr. UPTON. So——

Ms. PRAISNER. [continuing] again, sir, it——

Mr. UPTON. Look——

Ms. PRAISNER. [continuing] maybe we need to work together on tweaking the language. That is not the——

Mr. UPTON. I look forward——

Ms. PRAISNER. [continuing] way we read it.

Mr. UPTON. I look forward to doing that. I yield now. My time is expired. I got to be the—it is 6:30? No. Yes. It says 5. I have got another 5 minutes. I didn't touch it. Someone else did. I would recognize Mr. Markey.

Mr. MARKEY. That I am destroying the evidence.

Mr. UPTON. Yes.

Mr. MARKEY. Mr. Yager, in the bipartisan consensus draft, broadcasters were essentially held harmless. I worked hard with Mr. Dingell to ensure a balanced level playing field between the cable and Bell companies. The Barton-Upton draft upsets that balanced approach. From the broadcast perspective, this is obviously a step backward, and you would like to see those provisions restored to the previous consensus position that obligations for both wireline video competitors should be the same. Is that correct? And could you expand, please?

Mr. YAGER. Okay. That is correct. We believe in a level playing field for all——

Mr. YAGER. We believe in a level playing field for all video service providers. We are sure that that will ensure the public of a free choice of local television for both your constituents and our viewers.

Mr. MARKEY. Would you prefer the language in the first staff draft?

Mr. YAGER. I will have to say I am not familiar with the language in the first staff draft, but as you described it, I would prefer that language over the other language——

Mr. MARKEY. Okay. Thank you.

Mr. YAGER. [continuing] that you described.

Mr. MARKEY. Okay. Thank you, Mr. Yager. Mr. Ellis, SBC's CEO was quoted recently in Business Week. I would like to give you an opportunity to contradict your boss on how SBC will treat access to the Internet and Internet content. But I want you to do so in the context of a statement in your testimony which says, and I quote, "the video service will communicate with other IP-based services. Customers will be able to display on the TV secure, customized Internet content." My question is will this Internet content be of the consumers' choosing or SBC's choosing?

Mr. ELLIS. I appreciate the opportunity to contradict the chairman of my company, but I am not going to do that. To answer your question, the SBC has been very clear in many forms, including before this committee, that we will not block access that we provide to the Internet based on the content received over that access. So that is point No. 1. And point No. 2, with respect to the provision of services over our broadband facilities, the customer is going to have the option to utilize the facilities to access the content of their choosing. Now, I don't know how much clearer I can be about that.

Mr. MARKEY. Yes. Will that be all Internet content?

Mr. ELLIS. Will it be all what?

Mr. MARKEY. All Internet content.

Mr. ELLIS. All? If you are sitting in one of our houses that is served by our broadband facilities and you are at your computer, you can access whatever content tomorrow that you can today. There is no——

Mr. MARKEY. Through the TV?

Mr. ELLIS. Through the TV application will depend on the development of that capability, but we will fully expect that you will sit at your TV and you will have the capability, if you want, to watch half your screen being the video that comes out and the other half the screen, if you want to surf the web.

Mr. MARKEY. Okay. So the question, again, keeps coming back to who will choose.

Mr. ELLIS. The customer will choose which they want. But maybe what this gets to—and let me be very straightforward and candid about it—the provision of the video service that we propose to offer in competition with cable will not utilize the public Internet for a number of reasons. We cannot get the content providers, the video providers, the movie providers to agree to let us use the public Internet for distribution of their programming. There is privacy reasons; there is delay reasons; there is quality reasons; there is pop-up ads that come. So the video content will not access the public Internet.

Mr. MARKEY. Okay. So if we drafted language and inserted it into the bill that said that Internet content will be within the exclusive control of the consumers' choice, would you support that language in legislative form?

Mr. ELLIS. I would. I might need to see it in context, but——

Mr. MARKEY. Well, that is the question I have been asking you for 3 minutes, but the context is what you are about to do.

Mr. ELLIS. Let me say it this way: today, if you are our customer for Internet-access service, you have the choice——

Mr. MARKEY. Would you support——

Mr. ELLIS. [continuing] to access whatever——

Mr. MARKEY. Would you support that language being written into legislative form that the consumer is king and that the consumer has the choice of going to any Internet content that they want, unimpeded by SBC. Would you support that language?

Mr. ELLIS. Yes, in principle, I do. I want to see the language, because I want to be very clear that they have that capability today; they will have it tomorrow. I have no objection to that.

Mr. MARKEY. Okay. I hope we have a second round. I thank the——

Mr. UPTON. I don't know that we are going to do a second one, you may do questions in writing, because we have got another long panel after this. I broke the Markey rule by going to two panels, but you came up with this list of witnesses that I wanted to accommodate you on, sir.

Mr. MARKEY. I was afraid it was the last hearing we were ever going to——

Mr. UPTON. And you are probably——

Mr. MARKEY. [continuing] have on the——

Mr. UPTON. [continuing] right.

Mr. MARKEY. And I didn't want to——

Mr. UPTON. You probably had lunch and then you came back. Anyway——

Mr. MARKEY. Well, three companies are in the private room, and then I wanted to give everyone else a shot here.

Mr. UPTON. Mr. Barton?

Mr. BARTON. Thank you, Mr. Chairman, and thank you folks for being here, and thank you for letting us go vote and come back, and I know that wasn't easy. Let us assume that your choices on Federal telecommunication policy changes boil down to draft one and draft two, and that is the only choice you get. You can be for the first draft and against the second, or for the second and against the first, or against both, but you have got to vote for one of them. How many of you folks would vote for draft one, the one that we put out in September? Okay. We have got one, two, three, four, five, six, seven, eight—we got nine voters in draft one. How many for draft one? Two, three, two-and-a-half. How many for draft two? Two. How many for neither draft? So you want us just to throw in the towel and say we can't do it?

Ms. PRAISNER. Excuse me, sir, if I might comment. I don't think so at all. I think you have the parties' attention, and you have all of us at the table, and I think there was significant work as we worked through our staff. Some local government spent 12 hours with your staff—I think they told me. At least that is what they told me—in discussing of this one.

Mr. BARTON. Well the——

Ms. PRAISNER. So my point is, of the two, if that is my choice, this one is more preferable. Do we have work to do on both? I believe we do, and we are ready, local governments are ready. We have already indicated that. We are ready to work with you collaboratively, bipartisanly, however you phrase it, we are ready.

Mr. BARTON. Well, on draft 1, we got no positive comments. None. Cities didn't say they liked it. Microsoft didn't say they liked it. The Bells didn't like it. The ILECs didn't like it. We got none. So I am glad to know now that you have seen draft two, some of you like draft one. I guess in a way that is progress.

Ms. PRAISNER. May I comment, sir?

Mr. BARTON. But we have gotten a lot of positive comments on draft two. I am a little surprised I didn't see more hands go up for draft two, but maybe you all think it is a trick question.

Ms. PRAISNER. May I comment, sir?

Mr. BARTON. Well, I want to ask my folks down there on the end from Southwestern Bell, I want to ask you a question that is kind of similar to the Markey question. The reason we made the change from draft one to draft two on Internet accessibility is that our content providers all told us that if we didn't make some sort of a change, the content providers were going to be susceptible to Internet viruses, and that the content providers wouldn't provide content. Now, I promised Mr. Markey and Mr. Dingell that we wanted to have total access in this new era. In all these new services, we wanted to have access to them, but we took to heart, at least I did, that we didn't want to open up to the providers of the content that their systems could get infected with these viruses. So the tradeoff that we attempted to make was that you could protect—if you were a provider of video services or data services, or whatever it was that you were providing, that you could protect that, but that there would be an icon on the computer, on the television screen, wherever it is that the consumer was accessing it, that when they wanted to click over to the Internet, they had to click one time, whatever the icon that—Southwestern Bell has a different icon than

Microsoft or whatever, but it would be there, and even Joe Barton, as dumb as I am in high-tech, I could figure out which icon got me to the Internet, and I could click on it and I would have full access. Now that is the concept that we tried to put in the bill. I am going to ask my friend at Southwestern Bell if that concept, if it is in the bill, gives the content providers the ability to protect their systems, but it gives the consumer the ability to do what Mr. Markey said we need to do?

Mr. ELLIS. Absolutely. You did it much better than I, but that is what I was saying.

Mr. BARTON. All right. Now, my friend at Microsoft, are you satisfied with that?

Mr. MITCHELL. The way you just described it is certainly technically capable and would hit the connectivity principles of net neutrality that we have advocated. So, yes.

Mr. BARTON. I mean, that is what we are trying to do. That is the reason there is a change in the draft. It is not a change that has been accepted by Mr. Dingell and Mr. Markey. To their credit, they preferred the original language, and so we tried to keep the principle but protect the network, and if we haven't done it, we will keep trying, so that is our principle.

Mr. MITCHELL. Yes. I would only comment that I think the principle is the right principle. I think probably everyone at the table would agree at some level the language does need some tweaking as to how that actually works so that it is as clear as you have articulated.

Mr. BARTON. Okay. My time has expired. Thank you, Mr. Chairman.

Mr. UPTON. Mr. Stupak?

Mr. STUPAK. Thank you, Mr. Chairman. I thank you to the panel for being here. It was a lengthy panel and you sat through all the openings and glad to have you here today, and hopefully we can get this bill moving in more of a working together tone. Let me ask about this one, though. In the transition from traditional titles to the new BITS titles, it is not clear to me in this draft how providers make the transition from existing regulatory regimes to the new titles under this draft. For example, what if a cable operator has some customers under a Title I cable—I am sorry, a Title VI cable franchise, but also offers new services that qualify under the broadband video service definition. Is that provider required to get two franchise? Mr. Rehberger, do you want to hit that one? Would I be required to get two franchise?

Mr. REHBERGER. I think you hit upon one of the things that, not only I, but a couple of the other folks on this panel have talked about today. It makes no sense from a technology point of view the way we see it. I guess we would be a BITS provider today, because we provide Internet——

Mr. STUPAK. Right.

Mr. REHBERGER. [continuing] we provide VoIP-type technology. We are underlying providers to many of the VoIP providers that have been mentioned. So, clearly, we wouldn't understand what we fell under. If we provided a bundle of Internet access and voice services over a single T1 access line, would then—and that T1 ac-

cess line happened to be under uni-pricing, is that uni-pricing or is the uni-pricing gone because now we are a BITS provider——

Mr. STUPAK. BITS provider.

Mr. REHBERGER. [continuing] and, you know, we don't get uni-pricing under the BITS regime the way we see it. So it clearly is not something that we understand, and we don't understand why the staff believes there has to be a, you know, a division of the technology. What if the next technology comes out that——

Mr. STUPAK. Sure.

Mr. REHBERGER. [continuing] is somewhat different than VoIP, different than the packet-switch network, are we going to go ahead and develop another regulation for that? I think it goes back to what I heard here on my left which is the service that we are offering, it is not the underlying technology.

Mr. STUPAK. Okay. Well, let me ask you this then: I have heard from some of my smaller companies that their ability to interconnect will be weakened under this draft, do you see that?

Mr. REHBERGER. Yes, I do. I mean, if you go back—not to cite out of the bill, but if you go back and look at the access and co-location rights, it says those access and co-location rights for the purpose of providing telecommunication service, which again, maybe it is a clarification, but to that language, it says to us those rights wouldn't exist under providing BITS service, even though they exist under telecommunication service. We think that, you know, what this does is provide the ILECs themselves a way to essentially eliminate the uni-structure, which everyone forgets was a compromise in, you know, the 1996 Act, around having everyone getting their long-distance, and so that is what we think this does. It may not be the biggest piece of the bill as we talk about the video, but it is a very, very important bill to us. And if I could add one more point, it is that the idea that this is less regulatory than where we are today, I just don't see it. It is another set of regulations on top of the 1996 Act.

Mr. STUPAK. In my opening, I mentioned quite a bit about the Universal Service Fund because we you rely upon it in northern Michigan and throughout rural America. Do you support broadening the contribution base for Universal Service Fund? Do you support allowing Universal Service Fund be used for deployment of broadband? Anyone want to comment on that? Ms. Praisner? You would support that obviously as a municipality because——

Ms. PRAISNER. Yes.

Mr. STUPAK. All right. Anyone else care to comment on that?

Mr. REHBERGER. I would. We would support broadening the base on Universal Service Fund.

Mr. STUPAK. Well, let me ask you this then. In the first draft, we had the, you know, questions of how are you going to fund USF. Are you willing to live with a franchise fee agreement in your first draft which basically was based on a definition of gross revenues that included advertising, video-on-demand and other revenue associated with the video offering? Anyone want to comment on that? Care to touch that? Mr. Ellis, SBC, you were talking a little bit about that today.

Mr. STUPAK. Would you support that in the first draft as——

Mr. ELLIS. No, we are not okay with the first draft. We would prefer, obviously, the second draft that ties the 5 percent to revenues derived from the provision of the video services.

Mr. STUPAK. How would you fund the Universal Service Fund?

Mr. ELLIS. The Universal Service Fund, we don't have a problem with expanding it, so long as it is done in a competitively neutral way.

Mr. STUPAK. Thank you, Mr. Chairman.

Mr. UPTON. Mr. Whitfield?

Mr. WHITFIELD. Thank you, Mr. Chairman. And Ms. Praisner in her statement made the comment that in Texas that Telcos were given what they wanted with fast-track franchises, and then she went on to say that Verizon and SBC, months after the law was put on the books, have offered to provide competitive choice to less than 1 percent of Texas households. And then she asked the question, is the Nation giving up the consumer protections and community benefits and the current franchising system just to provide choice to 1 percent of the population. And, Mr. Ellis, I would ask you, how would you respond to that criticism?

Mr. ELLIS. Well, I guess with, first, a little bit of amazement. It has been literally weeks since the legislation passed. We have filed an application for all of the city of San Antonio metropolitan area. It incorporates 22 communities. That is our initial deployment schedule. Within a matter of weeks from the time the legislation was passed, Verizon went in to Keller, Texas. It has been talked about. And within days of Verizon selling its services, the incumbent cable operator dropped its rates 30 percent and added new features. I think it speaks volumes for the importance of this kind of legislation and the practical impact that the legislation can bring about, not just in Texas, but nationally. We are going to get well beyond 1 percent, but this is—after 35 years, it has taken the cable to buildup to essentially their footprint. We are literally weeks into this process.

Mr. WHITFIELD. Ms. Praisner, I know that you are certainly interested in lowering consumer prices, and Mr. Ellis has made the argument here that with that competition that they have provided, that in that instance, they did lower consumer prices. Would you respond to that, or——

Ms. PRAISNER. Yes, sir.

Mr. WHITFIELD. [continuing] any kind of——

Ms. PRAISNER. It is my understanding—and I welcome where SBC or Verizon may be going, but it is my understanding from conversations with folks in Texas that the numbers and areas where they are going are at a low percentage of the overall population of Texas. They may get there eventually, but not in this initial time period.

Mr. WHITFIELD. Okay. I wanted to ask Mr. Willner, whose company provides a lot of cable service in our area, and I am certainly not an expert in this issue, but I would like for you and Mr. Ellis both to respond to this question, Mr. Willner, if you would help me get a better grasp of this. If cable's VoIP, or voice over Internet protocols services, should be treated differently than the Bell's legacy telephone services, why shouldn't the Bell's broadband video serv-

ices be treated differently than cable services? Would you respond to that?

Mr. WILLNER. Sure. I would submit that, to the extent that we are competing for broadband services with similar services, that we should have parody in a deregulatory environment, and that is—that would be fine with us. And the cable industry has supported parody in a deregulatory fashion, and we continue to support that.

Mr. WHITFIELD. Mr. Ellis?

Mr. ELLIS. We would support the treatment of our entry into the video business on the same terms which cable came into the telephony business, in other words, without the burdens of the legacy regulation. And by that, I am specifically meaning without any of the obligations that surround the obtaining of a franchise. If we have to go through the franchise process that exists today in the communities we intend to serve, it will take us, at the rate of one franchise a week, 40 years, and that is if we can negotiate with the 2,200 communities, one a week, which is—that is impossible. It would take 40 years. The process—it can't work.

Mr. WHITFIELD. Yes. Well, Mr. Willner, would you be opposed to some streamlined national system to deal with this franchising issue?

Mr. WILLNER. No, I actually disagree with Mr. Ellis. I think that in order to evaluate the differences between us entering the telephone business and their entering the video business, we really have to define the competitive world that cable operators live in today. I heard earlier a number of people make some comment that we don't have any competition in our core business, and I can assure you, Mr. Whitfield, I wake up every morning thinking about what Dish Network and what DirectTV is going to do to us that day in Henderson, Kentucky and everywhere else that we operate, because they are extremely competitive. And the reason why people confuse the fact that we are not already in a competitive business is because they use a different platform. It would be the same thing as suggesting that Barnes & Nobles brick and mortar shops at the shopping mall don't feel that they are competing with Amazon.com because they don't have any bookshelves, but they sell the same books. We are already in a very competitive field. Going into the telephone business where there is a legacy network hooking into where over 80 percent—soon to be probably closer to 90 percent when these mergers are completed—of the telephone subscribers are hooked into the existing 100-year-old telephone monopoly infrastructure. We need certain rules in place in order to force the Bells, based on historical experience, to interconnect with us on a fair and economically sound basis for consumers to have choices. So I think there are some differences. The differences primarily are we are already competing with two, and in some cases more, competitors for our core video business, and there is very little competition in the phone business. That is where the failure in the previous acts had been, and that is what we have to work on making sure it takes root.

Mr. WHITFIELD. Mr. Ellis, the——

Mr. ELLIS. Well, I just—quick couple points. It is pure fact that cable rates have been unconstrained. Everyone in this room can tell their own stories, but the facts are up 40 percent in the last

5 years. They are unconstrained by whatever quote competition exists. The second point I would just make, that reverse is true in the telecommunications world. The rates have gone down on virtually every service that all providers offer. It is a highly competitive market. And the third thing I would say, if you want to talk about the difference between cable and telephony, we have an obligation to permit resale of our service, co-location, unbundling, and there is a whole laundry list. Cable has a completely closed system, absolutely closed. They don't require or permit co-location. They don't require or permit resale, and so on. Completely different thing. We are not asking to impose on them the legacy regulations. We are not asking that, never have. All we are saying is let us have the same rules apply to our entry into the cable, into the video service business, that they had when they came into telephony, and that is no legacy regulation applicable to them.

Mr. UPTON. Mr. Boucher?

Mr. BOUCHER. Thank you very much, Mr. Chairman. I have a microphone here. I am challenged by technology. In the wake of the Brand X decision by the Supreme Court which held that cable modem service is an information service and that unaffiliated Internet access providers do not have to be accommodated on the cable modem platform and in the further wake of the FCC's new rule that applies that same principle to telephone companies supported broadband platforms, it is now clear that unaffiliated ISPs do not have to be accommodated on broadband platforms. And that brings into particular focus the need for a firm principle of network neutrality that would simply say that any user of the Internet has the right to access any website of his choosing and fully enjoy the services provided by that website without interference by the operator of the broadband platform. Now broadband platform operators are going to have some incentive to manage. They, for example, might want to favor their own content in competition with the context offered by the unaffiliated content provider. And the principle of network neutrality is designed to make sure that doesn't happen, that there is no interference, that there is no favoring of the broadband operator's content to the disadvantage of the unaffiliated content provider and to the disadvantage of the broadband platform's customer. And so I have a couple of questions about this. Let me say at the outset, Mr. Ellis, that I acknowledge that when a broadband operator makes substantial investments in the network and deploys these facilities at considerable cost, that operator ought to have the assurance that he can deliver a reliable product, a high-quality product, whether it is VoIP or video, or something else, to the customer, and you have a right to expect that. On the other hand, because you are offering DSL service, your customer has a right to expect that some part of the capacity of that broadband platform is going to be devoted to his Internet access opportunities and that it be a considerable enough portion of the total capacity that when he wants to access an unaffiliated video provider, for example, there is still an opportunity for that signal to come in. And when he wants to access an unaffiliated VoIP provider, he can do that as well. And so my first question to you—and I want to engage also Mr. Mitchell, Mr. Putala and Mr. Krause in this conversation—but my question to you is do you acknowledge

that basic principle, that you ought to be able to offer your service at high-quality, but your Internet customer ought to be able to reach any website and have sufficient capacity on your pipe in order to enjoy those services?

Mr. ELLIS. Absolutely, and just so I am clear, if you obtain our service, you will have the ability to access the site of your choice over the public Internet, and we will not interfere with it in any way, as long as it is lawful content. I want to make it clear that is to be distinct from the provision of the video that will be completely segregated, kept apart from, the public Internet.

Mr. BOUCHER. Right. I understand that. That is your business model. What about the capacity that will be available on your platform for the public Internet access part? How will that compare to the capacity that you are going to utilize for your closed video service?

Mr. ELLIS. For individual customers, there is ample capacity that will be out there. That is not an issue. Today, you get 1.5 Megabits. We strive to provide that depending on where you are. We will have ample capacity, and if a customer wants more than 1.5, they want to go to 3, we will sell it to them. But I make clear to people in my simple way of looking at this, that there is three parts to this Internet. There is the part we provide from the house to——

Mr. BOUCHER. My time is limited, Mr. Ellis. I think you answered my question. Based on that answer, I assume you would not disagree with a requirement that you not unreasonably restrict the amount of capacity that is available for the DSL service you are going to be selling?

Mr. ELLIS. In—our position on this, like so many other things, that heavy-handed regulation shouldn't be there. It ought to be commercial terms negotiated with all providers.

Mr. BOUCHER. All right. I see some heads shaking on the panel here. Let me engage Mr. Mitchell, Mr. Putala, Mr. Krause, if you would like to respond to what Mr. Ellis has said and perhaps address the general assembly.

Mr. UPTON. Quickly.

Mr. KRAUSE. Yes, I want to say something very quickly, which is Mr. Ellis makes an important point, which is there is a very important distinction between what is delivered on the public Internet compared to what is a managed service that uses Internet technology but is in fact more akin to the intranets that we all access today. So as long as there is a very clear distinction between the two, and a separation, logical or physical, between the two, this is critical to the delivery of the IP video service because otherwise you won't get the content authored to you from the Hollywood studios.

Mr. BOUCHER. And it is a capacity issue with regard to the public side of that, isn't it?

Mr. KRAUSE. Yes, it is. In fact, the public side of the Internet, the Internet is essentially a best effort service. So when we say we offer 3 Megabits, the subscriber doesn't actually get 3 Megabits of sustained bandwidth. They get some very small percentage of that and it is allowed to peak. That is what is the Internet. The managed intranet is very different from that. It is actually a sustained guaranteed bandwidth so that the service provider can deliver the quality that the studio requires to deliver the content.

Mr. BOUCHER. All right. Mr. Mitchell, Mr. Putala, would you care to comment?

Mr. MITCHELL. I would have made the same comment as my colleague to my right, Mr. Krause.

Mr. BOUCHER. All right. Mr. Putala?

Mr. PUTALA. Absent a real commercial incentive, it is real hard to get to the deal that Mr. Ellis described. What we are concerned is not so much that they are going to block, but it is a question of prioritization and what happens within the guise of prioritization. If Mr. Ellis has got his own video packets and his own VoIP packets going over his switch, same customer—SBC customer for VoIP and for video and he always puts his VoIP packets ahead of his video packets—because that is what the technology requires—okay. That is fine. But if it is an EarthLink voice customer, let us make sure there is language in there to protect the fact that EarthLink customers, when their VoIP packets cross along on the same pathway, that they also get jumped ahead of the video packets so it is the same level of service, just for different customers, and that would——

Mr. BOUCHER. If there is adequate capacity on the public side however, that is not a problem, because over that adequate capacity, your VoIP service can travel, right?

Mr. PUTALA. If it is——

Mr. BOUCHER. As long as it is adequate?

Mr. PUTALA. As long as it is adequate, it is not a problem.

Mr. BOUCHER. Okay. So my final question, Mr. Chairman—thank you for your——

Mr. UPTON. Be very quickly.

Mr. BOUCHER. If I may, would the 3 of you who have just answered agree that some requirement that adequate capacity be reserved in these instances for the public side would be appropriate?

Mr. UPTON. Yes or no?

Mr. MITCHELL. Yes.

Mr. ELLIS. Yes.

Mr. BOUCHER. Mr. Krause?

Mr. KRAUSE. Yes.

Mr. BOUCHER. Okay. Thank you. Thank you, Mr. Chairman.

Mr. UPTON. Mr. Shimkus? Strike him out. I just—as a deferral who has no opening statement gets 3 minutes.

Mr. SHIMKUS. I know. I am going to be—I know everything that I want to be asked has been asked already. Just give me an idea, did we—did anyone ask any questions on E911 yet? Okay. I will just stay on that vein then because you all know that Anna Eshoo and I worked very diligently with the public responders in pushing enhanced 911. We all know that there is a concern about identification/location based upon VoIP. There is an expectation by the public, and that is an expectation this committee will want to fulfill. And I know there is, based on the opening statements which I was present for, I know that there is some concern technologically about the ability to do that. But, a statement, and then I will let people respond. I would just say that I—you can't always speak for all members of the committee, but I think once we move a process, that the expectation that someone uses and calls 911 over any medium will have the expectation that people can know where they

are at. And that is what I hope you all will address, and I will open it up to anyone who may want to comment on that.

Mr. PUTALA. Congressman, knowing of your leadership on the 911 topic, we at EarthLink are doing our level best to comply with all the very abbreviated deadlines that the FCC has asked us. I think we are at about 94 percent compliance in terms of letting our customers know. We have done repeated emails to try and let them know of the capabilities of the service. We are only going to be marketing the 911 service where the infrastructure allows it. And that raises an important point that is addressed in the draft about the central importance of making sure that there is non-discriminatory access to the 911 infrastructure controlled by SBC and others, and there is an important omission in the staff draft. I think I understand the reason, but I would be remiss not to note it, of ensuring the same kind of regulatory parody, the same kind of liability parody that has been—I think it was included in your underlying legislation, and we hope that at the end of the day, I hope that VoIP providers will have the same thing as wireless, wireline in terms of the liability protections.

Mr. SHIMKUS. Anyone else?

Mr. REHBERGER. Yes. Congressman, if I may, I agree on the liability portion of that bill. Very important for us. And then, second, we are fortunate in that our customers are businesses and they stay in one place, so we don't have an issue. Although, we are working very hard with some of the VoIP providers who we—they use our underlying network to make sure that they can provide E911 services to their customers.

Mr. SALAS. Congressman, I would just add that this capability will not happen by accident. It will require, I think, continued focus and development on standards to make this work I think the way you intend for it to work.

Mr. SHIMKUS. Well, and we just got a great organization grouping caucus with both members on bipartisan members in the House and Senate, of course, and in the industry working well together that and we want to applaud that. Yes, ma'am, you wanted to say something?

Ms. PRAISNER. Yes, sir. Thank you. I wanted to share that from my perspective and from the local government officials, obviously this is a critical issue as well, having our constituents and our consumers know that when they make that 911 call, it connects with the right place. My—some of the colleagues who have reviewed the legislation have raised some concerns about the fact that the legislation does not include an EASS video requirement for 911 so we obviously would want to work and look at that issue.

Mr. MITCHELL. The only comment that I would make is just to note that there are distinctions in different types of VoIP services as I noted earlier, and to make certain that we don't end up with something where click-to-calls for Xbox Live or similar kinds of uses of the technology somehow become burdened by E911 and similar obligations.

Mr. SHIMKUS. Mr. Chairman, with that I want to thank the panel. I know they have been long-suffering and I appreciate them being here, and I yield back.

Mr. UPTON. Mr. Inslee?

Mr. INSLEE. Thank you. Mr. Ellis, I wanted to ask you about—Mr. Boucher's last question was a question of, basically, should there be a maintenance of some minimal level of public access—access to the public Internet over these pipes, and the other folks answered yes, and your comments, as I understood them, were helpful in that regard. And that is why I appreciate you being here today to expound on them. But, if you could really clarify a little bit what you see where your vision is in that regard, providing consumers with level or levels of access to public Internet. You made a reference that if there was a larger amount available, you would sell it to them, I presume, for a higher price. I guess the question is I have, do you envision some regulatory or statutory minimal level of access to the public Internet over your pipes, and if there is a minimal level, do you envision tiers where you would sell for additional cost this additional level of service as far as just—I don't know—the pipe you take up.

Mr. ELLIS. I guess my personal vision of how this service—our service will work is like this. We will provide, using these facilities, a video alternative—that is one piece the facility will use for that. In addition, we will provide to our customers the same thing we have today, that is the capability to access the public Internet and the content of their choosing. That is how I envision this going forward. I think as a practical matter, a level of 1.5 Megabits that we offer today with DSL, there will be many, many people who will want more, and we will offer that. Will there be an additional charge? Sure. The more bandwidth they want, the more the charge. But I would—the point I tried to make earlier, your focus—and the focus is on one-third, the point from the house to the backbone. Then there is the backbone, and there are 17 or 18 backbones and it goes all over the world. And then there is the downside. We control and offer one-third of that. We assure quality 1.5 Megabit, or try to. But what happens on the rest of that Internet, the lowest common denominator is the flow-through that a person gets, and the dissatisfaction, I submit, that is going to grow as more applications, more sophisticated, is not going to be solved by focusing on one-third. It is going to be the other two-thirds as well. I don't know if that helps, but that is where my personal view of the focus of the future and where everybody is going to have to invest in the infrastructure. Not just the ILECs, not just the cable people, but—the applications providers, to make sure that entire flow-through gives the kind of quality that will support the kind of applications that are out there.

Mr. INSLEE. And what effects of this bill would you encourage to look at in that regard to encourage those investments on the other part?

Mr. ELLIS. I am—as I said, there are probably things if I had written this bill or draft, I would have done differently, but we are happy with the bill in its present form.

Mr. INSLEE. Thank you. Mr. Mitchell, I wanted to ask you, just continuing talking about net neutrality, do you think there are any providers of broadband Internet access that should be exempted from net neutrality, or should this be a universal principle?

Mr. MITCHELL. I think we have been pretty clear that we view the net neutrality as pretty much a universal principle for pro-

viding Internet access to consumers across the board. You know, with—that has been the basis of the Internet success today. In fact, I think Vint Cerf today, the father of the Internet as perhaps we know it, is receiving a Presidential Medal as a result of, you know, getting us to this point. These principles of being able to go anywhere and use whatever content, clearly within the limits of the capabilities of the devices you have—my phone doesn't do as well as my PC on the Internet—but that is a universal principle that should be applied.

Mr. INSLEE. Thank you. Thanks, Chairman. Yield back.

Mr. UPTON. Yes, before we yield to Ms. Blackburn, I just want to make two unanimous consent requests. One from Mr. Ferguson to put in a statement from ADC Telecommunications and one from Mr. Markey to enter in a Vint Cerf, founding father of the Internet—I thought that was Al Gore. Put a letter in from him as well. Without objection?

Mr. MARKEY. Mr. Chairman, could I briefly be recognized, and because Mr. Mitchell made reference to Vint Cerf, and he is receiving the Medal of Freedom today, and his letter to us, as Mr. Mitchell said, says to us today, "My fear is that as written, this bill would do great damage to the Internet as we know it. Enshrining a rule that broadly permits network operators to discriminate in favor of certain kinds of services and to potentially interfere with others would place broadband operators in control of online activity. Allowing broadband providers to segment their IP offerings and reserve huge amounts of bandwidth for their own service—that is SBC—will not give consumers the broadband Internet our country and economy need. Many people will have little or no choice among broadband operators for the foreseeable future, implying that such operators will have the power to exercise a great deal of control over any applications placed on the network." I ask that it be included in the record.

Mr. UPTON. Good. Without objection.

[The information referred to follows:]

Statement of ADC Telecommunications, Inc. In Support of
Telecom Reform Legislation (Discussion Draft)
(November 9, 2005)

My name is Jack Field. I am Vice President of Global Connectivity Solutions for ADC Telecommunications. ADC is one of the nation's largest telecommunications manufacturing companies. We have about 8,600 employees worldwide, with more than half of our employee base in North America. Our world headquarters is in suburban Minneapolis. ADC makes a wide variety of communications network infrastructure products for the telephone, wireless and cable TV industries and for enterprise customers around the world.

We support the Discussion Draft. We urge this Subcommittee to approve it quickly.

The Discussion Draft is a good bill because it reduces regulatory obstacles that have slowed investment in the telecom industry while maintaining regulatory controls that continue to serve a useful purpose. To cite just one example - the cumbersome and slow video service franchising process without question has slowed the deployment of the new network infrastructure necessary for the provision of switched, two-way multi-channel video services. The Discussion Draft greatly simplifies the franchising process and thus will help speed tens of billions of dollars in investment in telecom infrastructure and other high tech products.

By reducing regulatory obstacles to investment, the Discussion Draft can be thought of as a "jobs bill." Indeed, if enacted, it likely will help create tens of thousands of high tech manufacturing jobs in the U.S.

Job creation in the high tech industry will benefit the U.S. economy tremendously. Just five years ago, U.S. high tech manufacturing was viewed by many as the crown jewel of our nation's economy. But the bubble burst in 2000. Several hundred thousand high tech manufacturing workers lost their jobs, including several thousand at our company alone. But numerous studies have projected that legislation like the Discussion Draft will help produce resurgence in spending for telecom products and thus manufacturing jobs. Indeed, one major study has projected that increased spending produced by such legislation will add $500 billion to the U.S. economy and create one million new jobs within 20 years. Another has projected that such legislation will produce $58 billion in new telecom capital investment and create 333,000 new jobs within five years.

Not surprisingly, ADC is not alone among high tech manufacturers strongly supporting regulatory reforms such as those set forth in the Discussion Draft. I understand that Alcatel North America, another large telecom manufacturer, is testifying in support of this legislation this morning. And my company is part of an informal coalition of 70 high tech manufacturers working in support of legislation such as the Discussion Draft.

The high tech manufacturing industry needs the certainty this legislation will provide, and the sooner the better. We hope the Subcommittee and full Committee will approve this bill before this session of Congress ends next month. This is not an unreasonable time line. The Subcommittee already has held numerous hearings early this year on the need for telecom regulatory reform, and an earlier version of the Discussion Draft was made publicly available several months ago.

November 8, 2005

The Honorable Joe Barton
Chairman
Committee on Energy and Commerce
U.S. House of Representatives
Washington, D.C. 20515

The Honorable John D. Dingell
Ranking Member
Committee on Energy & Commerce
U.S. House of Representatives
Washington, D.C. 20515

Dear Chairman Barton and Ranking Member Dingell,

I appreciate the inquiries by your staff about my availability to appear before the Committee and to share Google's views about draft telecommunications legislation and the issues related to "network neutrality." These are matters of great importance to the Internet and Google welcomes the Committee's hard work and attention. The hearing unfortunately conflicts with another obligation, and I am sorry I will not be able to attend. (Along with my colleague Robert Kahn, I am honored to be receiving the Presidential Medal of Freedom on Wednesday at the White House.)

Despite my inability to participate in the planned hearing in person, I hope that you will accept some brief observations about this legislation.

The remarkable social impact and economic success of the Internet is in many ways directly attributable to the architectural characteristics that were part of its design. The Internet was designed with no gatekeepers over new content or services. The Internet is based on a layered, end-to-end model that allows people at each level of the network to innovate free of any central control. By placing intelligence at the edges rather than control in the middle of the network, the Internet has created a platform for innovation. This has led to an explosion of offerings – from VOIP to 802.11x wi-fi to blogging – that might never have evolved had central control of the network been required by design.

My fear is that the approach embodied in the latest draft of the House bill would do great damage to the Internet as we know it. Enshrining a rule that broadly permits network operators to discriminate in favor of certain kinds of services and to potentially interfere with others would place broadband operators in control of online activity. Allowing broadband providers to segment their IP offerings and reserve huge amounts of bandwidth for their own services will not give consumers the broadband Internet our country and economy need. Many people will have little or no choice among broadband operators for the foreseeable future, implying that such operators will have the power to exercise a great deal of control over any applications placed on the network.

As we move to a broadband environment and eliminate century-old non-discrimination requirements, a lightweight but enforceable neutrality rule is needed to ensure that the Internet continues to thrive. I am confident that we can build a broadband system that allows users to decide what websites they want to see and what applications they want to

use – and that also guarantees high quality service and network security. That network model has and can continue to provide economic benefits to innovators and consumers -- and to the broadband operators who will reap the rewards for providing access to such a valued network.

Google looks forward to working with you and your staff as you work to draft a bill that will maintain the revolutionary potential of the broadband Internet.

Thank you for your efforts these issues and for your attention.

Sincerely,

Vinton Cerf
Chief Internet Evangelist
Google Inc.

November 8, 2005

The Honorable Joe Barton
Chairman, House Energy and Commerce Committee
2109 Rayburn House Office Building
Washington, DC 20515

Dear Chairman Barton:

As you may recall, I represent the National Black Chamber of Commerce (NBCC), a non-profit organization representing the interests of the more than 64,000 Black-owned businesses with 201 affiliated chapters located in 40 states, and eight countries. NBCC strongly urges the progression of the Energy and Commerce Committee's November 3, 2005 discussion draft on telecommunications reform because it is a pro-consumer and pro-deployment bill. This means the generation of jobs and contracting opportunities for small business owners. Small business remains the prime engine of the U.S. economy, creating two out of every three new American jobs. One million of these businesses are owned and operated by African-Americans. And 90 percent of these firms are owned and run by single individuals—lone entrepreneurs with the heart to tough it out in toe-to-toe competition with the biggest corporations in the world.

We can do this because so many modern technologies—from cheap long distance, to overnight delivery—equalize the playing field between big players and us so-called "little guys." For small business, the greatest equalizer of all is the Internet. However, small businesses' inability to have access to advanced services (voice, video and data) at affordable prices threatens to undo this advantage and place African-American small business at a distinct competitive disadvantage.

Telecommunications reform will be one of the most important issues your Committee will tackle this Congress, as the implications for consumers and for the economy are tremendous. We are especially pleased about the provisions designed to spur competition in the video marketplace.

The Government Accountability Office found that, in areas where there is more than one cable operator, prices are 15 percent lower than in areas where there is only one. There is even more proof that competition constrains cable rates. When a new provider of video services announced that it would provide cable service in Keller, Texas, the

incumbent cable operator slashed the price of its bundled video and data service in half.

We are encouraged that the staff draft will eliminate the most significant obstacle to video service competition: the local franchise requirement. With over thirty thousands local franchising authorities throughout the country, it will take years for companies such as SBC and Verizon to complete the process. In today's fast-moving technological environment, such a bottleneck makes little sense, and only provides a means for the cable company to maintain its monopoly. The staff draft meets the needs of local governments by retaining the requirements that companies pay franchise fees and provide access to local governmental, public and educational channels. We view these as fair requirements. And the faster new networks can be deployed, the faster jobs will be generated and consumers will get access to competitive pricing. The NBCC is a member of the US Chamber of Commerce. We are aligned in our missions to grow American businesses and to create new well paid jobs. These new networks will achieve that.

Mr. Chairman, we urge you to move your legislation as soon as possible. Small businesses and consumers need access to competitive video services at affordable prices to enjoy the benefits of the next generation broadband network.

Sincerely,

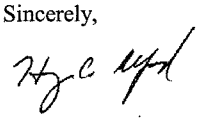

Harry C. Alford
President & CEO

WEBSITE: WWW.NATIONALBCC.ORG EMAIL: INFO@NATIONALBCC.ORG
1350 CONNECTICUT AVE., NW, SUITE 405, WASHINGTON DC 20036 TEL. 202-466-6888 FAX 202-466-4918

Mr. UPTON. Ms. Blackburn?

Ms. BLACKBURN. Thank you, Mr. Chairman, and I am glad you have this statement from ADC Telecommunications. I was going to ask for that permission and I will not make a comment about Al Gore being the father of the Internet, saying as Tennessee—Ms. Praisner, I think I would like to come to you, please. In your testimony under Roman Numeral VI.1, you say that everyone loses because local governments will not have proper management of their streets and sidewalks, and I will have to tell you I am pretty disappointed in hearing that come from you because it looks disingenuous. But, I want to tell you that I think that this, in no way, undermines the ability of cities to manage their rights-of-way, and I think you can go to page 61 of the bill, Section 406, and see that it specifically states that you will "continue to retain explicit authority to manage your rights-of-way." Mr. Putala, to you, please, sir. I imagine a lot of this, you are sitting there thinking they are fighting over franchise fees and everything is going to go wireless so it is a debate that is going to be out there at some point in time. Very quickly to you because time is limited and we are going to have a vote and others have questions, your project on the EarthLink municipal networks that you were doing with Wireless Philadelphia, I would love to have from you, if I could please, sir, something about cost, about the revenue that you will pay to the wireless Philadelphia Project to help bridge the digital divide, and what you see as the cost-savings—the amount of time that you will save in putting that network up over that 135 square mile area, and then also what you think the savings overall will be for the community. And I will not ask you to expand on that right now, but I will ask you to submit that to us.

Mr. PUTALA. It is fine. I can give you very briefly. $15 to $20 million of capital expenditures on our nickel. We will be sharing hundreds of thousands of dollars with Wireless Philadelphia to provide computers and others to the lowest income Philadelphia residents. We will be charging a retail rate of somewhere in the neighborhood of $20. We are going to charge a wholesale rate that will be available to anybody who wants to bring customers to our network for about half that, about $10. That same $10 half-price offer will be available to lower income Philadelphia residents. The speeds will be about 1MB up and down, which is faster than the slower versions of DSL, but slower than the faster versions.

Ms. PRAISNER. Okay. But no franchise fees and fussing over right-of-way, right?

Mr. PUTALA. We operate on God's Highway, but I will note——

Ms. BLACKBURN. So I will tell you what, I am going to tell you, sitting here, listening to this and being a Tennesseeian, I think if we were discussing the Federal interstate highway system, that there would be somebody out here trying to reserve a lane for horses and buggies, I tell you. The status quo is there are some who are trying to preserve that. Ms. Praisner, I want to come to you, if I will. Ma'am, if I have a question——

Ms. PRAISNER. Okay.

Ms. BLACKBURN. [continuing] if you would let me——

Ms. PRAISNER. Oh.

Ms. BLACKBURN. [continuing] ask the question——

Ms. PRAISNER. Sure.

Ms. BLACKBURN. [continuing] for you. Under Roman Numeral VI.3, you state community needs are essentially abandoned, and it is my understanding that the committee draft requires any new entrant to meet those needs and provide the PEG channels, and I believe that new entrants may even provide more. Coming from an area where there are plenty of content producers, they are probably going to provide more in order to entice consumers to choose their products, so I would like for you to very quickly, in 30 seconds, tell me how you think this abandons community interests.

Ms. PRAISNER. Well, we are talking about two different things. You are talking about what you may offer as a commercial provider to entice someone to subscribe. I am talking about the franchise process which allows a local government to identify what are the community needs through the franchise process. And then in the process——

Ms. BLACKBURN. Okay. If—is that what you mean by meeting social obligations?

Ms. PRAISNER. Yes.

Ms. BLACKBURN. Because you have mentioned that you think there needs to be fair compensation through social obligations to the community, and that is under point 4 of your testimony. So if you want to submit something in writing to further explain what you see as the social——

Ms. PRAISNER. I——

Ms. BLACKBURN. [continuing] obligation——

Ms. PRAISNER. [continuing] would be more than——

Ms. BLACKBURN. [continuing] in addition to the——

Ms. PRAISNER. [continuing] happy to.

Ms. BLACKBURN. [continuing] franchise fee and the——

Ms. PRAISNER. And I will also provide testimony in response to your comments about page 61——

Ms. BLACKBURN. Okay.

Ms. PRAISNER. [continuing] I discuss when you——

Ms. BLACKBURN. That will be wonderful. Another thing, in your testimony, point two, footnote four, want to go there because you say, "let there be no mistake, local governments want competition as fast and as much as the market when some States will—laws will sustain." There is a footnote there, footnote 4, and when I went to the footnote, you discuss level playing statutes and that also some cable franchises contain these provisions as contractual obligations on local governments. Now, my question to you is this, are you hearing from your members who would like to offer an additional cable franchise that might not be identical but they are prohibited from doing so because of the level playing field laws or any competitive contracts that cities might have signed simply to try to get a cable provider into their area? And I would assume that you are hearing what you are hearing from your members who want some relief from anti-competitive laws like these, that you are probably hearing from them, too. So when can this committee—when can you get me some data from your organization to document the scope of the problem as you see it, and let us know how many cities want to offer an additional franchise but are reluctant to do so out of fear of being sued and pulled into court and having

to spend taxpayer money to defend themselves simply because they want to offer one service? If you will, please submit that. And I am out of time. I am over. Thank you and I yield back.

Mr. UPTON. Mr. Gonzalez?

Mr. GONZALEZ. Thank you very much, Mr. Chairman. My apologies for being absent for much of the testimony. The—but I assure the witnesses that we have your written statements and, along with staff, we closely go over those. My question will be to Mr. Ellis, and the second question to Ms. Praisner. Mr. Ellis, of course we have the Texas experience. Texas Senate Bill 5 regarding franchise authority that was passed recently, and I would like to know what SBC has done under that particular legislative scheme. Of course, we are looking at it at the Federal level in preemption, but what has SBC done. And if you will also go over the chronological order of when that bill was actually passed and when you all have submitted an application and where we are today. And then I, quickly, Ms. Praisner, wanted to tell you about what I am already receiving from the city of San Antonio questioning the FCC's authority, or their interpretation that this proposed draft allows the FCC to take over basically disputes that—as far as right-of-way disputes and the concerns. And I apologize again if you have gone over that, but those are the questions. Mr. Ellis, I appreciate it.

Mr. UPTON. You need to turn that mike back on. There is a button there someplace.

Mr. ELLIS. As you indicated, Congressman, the Texas legislation was passed about 60 days ago, and since that time, we have filed our initial application for the city of San Antonio, 22 communities, essentially the entire metropolitan area of San Antonio. We will—that was recently approved. I think in the last week we got the Texas Commission's approval, and we will go forward with deployments starting in December will be our initial trial. We will start offering commercial service sometime in the middle of the year. Was there some other—we intend to go—we intend, in a 3-year period, to offer video services to approximately half our customer base, about roughly 18 million customers in 3 years.

Mr. GONZALEZ. Okay. Well, thank you very much, Mr. Ellis. I just wanted to point out under the Texas experience and that SBC and other similarly situated companies are wasting no time obviously to go through the license application, which has been streamlined. Obviously, you have a State standard now. And then to offer those services. I know that legislation was promoted, and just that it is being taken advantage of. And then to Ms. Praisner?

Ms. PRAISNER. Yes, sir. The concern that the Texas municipalities have raised is what happens within the dispute process, and with the issue of having to go to the FCC when—and having the FCC in essence be court of last resort as opposed to the court process which exists at this point. So I think that is the concern that they were raising to you and the concern that has been raised. We have very little experience obviously with the Texas legislation at this point, and hope that SBC will allow us, as they said—I am not sure if it is 18 million households, what percentage of the population that is as well. That is the other issue we raised.

Mr. GONZALEZ. Let me ask you, Ms. Praisner, real quickly—I do have a little bit of time left. When it comes to right-of-way disputes

and anything that is, I guess, supplanted by, you know, Federal authority where you have the FCC actually being the final arbiter of any—is there anything similar to that in any other municipal scheme where you would have a Federal agency of this nature that would come in and actually act in that capacity?

Ms. PRAISNER. No. I just checked with folks behind me because I couldn't think of any. Not that I am aware of.

Mr. GONZALEZ. All right. All right. Thank you very much. I yield back the balance of my time.

Mr. UPTON. Mr. Bass?

Mr. BASS. Thank you, Mr. Chairman. And, like my friend from Texas, I want to apologize for not having been here for a lot of the hearing. It has been a very busy day. But this is an exceedingly important hearing on a very important bill, updating telecommunications. The bill is complicated and there may be some issues involving its interpretation, how it would be—how it would work. I hope that my friend from Michigan, the Chairman, will be—will have a prudent go-slow attitude about this and that we don't move overly expeditiously so we make sure we know what we are doing, because we know from the Act of 1996, there are problems that came about which might have been resolved had we made a few little corrections. As I said a minute ago, or I started to say a minute ago, that one of the flaws of the 1996 Act was that in some instances it failed to provide the FCC the authority to issue some of the rules that were needed to enact their interpretation of what Congress intended, and ultimately the legislation itself was sufficiently obscure on its own to cause telecommunications policy process to include what basically became routine visits to the judicial branch, and basically slowing down the progress of telecommunications growth. I am sure this provided plenty of work for telecommunications lawyers, but it has been one of my—one of the two objectives that I have had in approaching this legislation, that it provide the business community and the providers with regulatory certainty and avoid this routine of—circle of going to court every time the FCC makes a decision. My question to the panelists are are there any specific areas in this staff draft that we are looking at today that you think will cause more litigation, either through uncertainty, the incumbent providers in industry looking to draw out maximum benefit or actual confusion on the legislative intent? In other words, uncertainty, incumbent providers in industry looking to draw out maximum benefit or actual confusion on the legislative intent? Yes, sir.

Mr. REHBERGER. I may be repeating myself for the other members, but since you asked the question, I pointed out that separating the technology—packet-switching technology, circuit-switching, voice versus data, to me creates a whole set of questions and a whole set of interpretations that the telecommunications lawyers will gladly debate for years to come if the bill is enacted like it is. Our company, as I have mentioned, we sell data, voice, Internet, VoIP-type products all in one. I wouldn't know which regulations apply and which didn't. I wouldn't know if the co-location obligations that the ILEC had under the 1996 Act would apply to me now as a circuit-switch or a packet-switch or a BITS player. I wouldn't understand if the ILECs would continue once they were BITS play-

ers to have to offer special access tariffs. So I think that is the area that is most confusing, and I will say it again. I think for some reason the—there has been a long hard battle, as you have alluded to, since that Act in every major level of judiciary, and I think we have gotten to a point now where neither is happy, and maybe that is the point we will stay. I think this is going to open up, again, the wound and create a lot of—a lot more time in the courts.

Mr. BASS. Anybody else?

Mr. WILLNER. If I could just expand on that a little bit. We talked a little bit earlier about network neutrality issues, which is a subject that is really in fact being governed by the marketplace today. I mean, I don't think my company, I don't think Mr. Ellis' company, would commit marketing suicide by doing things to consumers that other people aren't doing. The question then is really is there a need for preemptive legislation for a problem that doesn't yet exist, and in fact the marketplace will probably govern much more effectively, which will then give a lot of litigators, a lot of regulatory attorneys the opportunity to try to reinterpret what network neutrality really means under any statute that was trying to be preemptive in the first place. So it is solving a problem that doesn't exist, and therefore—there is language that is ambiguous because we don't know exactly what we are solving for, and is it really not something that should be dealt with if the problem should develop in the competitive world?

Mr. ELLIS. Congressman, I would only add that the Telecom Act of 1996 was billed as a deregulatory act. That was its promise. The summer of 1996, FCC came out with its first order. It was 700 single-spaced pages. It had 1,400 footnotes, and since that time, there have been literally thousands and thousands of rules and regulations to implement that deregulatory act. Any time you replace a marketplace with rules and regulations, there will be litigation.

Mr. BASS. So you think this bill is overly regulatory?

Mr. ELLIS. I think it is to a degree, but as I have said, we support the bill. We understand the pragmatic situation, and it is probably the best that we can do.

Mr. BASS. All right. I yield back.

Mr. UPTON. Gentleman's time has expired. Mr. Radanovich?

Mr. RADANOVICH. Thank you, Mr. Chairman. I, first of all, want to thank the Chairman and the committee staff for your hard work and leadership on providing this draft and moving the process forward. However, the draft legislation before us is silent regarding digital content protection, and in fact some content owners are concerned that Section 104 of the discussion draft might even impede the ability to work cooperatively with BITS and BVS providers to implement anti-piracy measures. My question, when I get through with this, will be for Mr. Ellis. I think I would like to get your opinion on this. The imperative of protecting copyrighted work, both for the sake of the individual artist and the continued growth of our economy, requires that BITS and BVS providers be given unambiguous authority to take preventative and other measures against infringing activity by subscribers that are intent on breaking the law. This might mean requiring its devices used to connect to their service include copyright protection technology, or being able to block access to peer-to-peer networks, overwhelmingly used for infringe-

ment, or even terminating the service of subscribers who are repeat infringers. I would appreciate—Mr. Ellis, can you tell me your views on this matter, and whether or not you would agree with suggestions for clarifying the authority of service providers to employ anti-piracy measures?

Mr. ELLIS. Our position is very clear. This came up in our company with respect to the copying of the songs and all of that. We went to court rather than be the policeman of that. We are not in a position—don't want to be in the position of blocking access to the content. On the other hand, if somebody is doing something against the Law, then we would be—we would support and facilitate somebody else in enforcing those rights. We don't want to be the policeman. We don't want to block our customers access.

Mr. RADANOVICH. You don't want to be the cop and I understand that, but you do support legislation that would fix that?

Mr. ELLIS. Yes, we would be supportive of that.

Mr. RADANOVICH. Okay, thank you. My second question is for Ms. Praisner. Thank you for being here today. I do want to draw on your statement that local government will never agree that local franchise process has been impeded by—has impeded video competition. The New York Times recently suggested that there were 33,000 local franchise authorities in the United States, and the Wall Street Journal recently reported that Verizon alone has launched franchise negotiations in about 300 communities for its new video service, but has only secured about 14. That article also reports that in some of those communities, budget strapped local officials are greeting Verizon with expensive and detailed demands, including in New York State where Verizon faces requests for seed money for wildflowers and a video hookup for Christmas celebrations. Holliston, Massachusetts is seeking free television for every house of worship. Others want flower baskets for light poles, and that is just a few of about—of what the 300 communities in which Verizon is attempting to secure franchises. It says nothing about any of the other 32,700 franchise authorities across the country and their possible requests. So my question is, in light of those examples from the Journal article, will you still never agree that the local franchise process has impeded video competition, the very same video competition that you stipulate reduces cable rates and enhances services?

Ms. PRAISNER. Yes, sir, I will still never agree because the information in those articles is just not factually correct, and I do have the information that can respond to those. We did go out and find information. There is a provision within the Massapequa Park, which is in New York, franchise agreement for capital support payment for $27,000, which is the same as a cable provider, but there is no provision for any kind of planting of wild flowers. There are—and I can tell you from my experience as a member of the Local State Government Advisory Committee for the FCC. We found ourselves in the same situation with cable—with cellular tower and with the rollout of digital television. Continuously the FCC would hear of accusations, outrageous statements of what local government was requiring, and, in fact, it led us to ask the FCC to have the applicants or the complainant notify—formally notify a local government when its name was used so that the local government

would have an opportunity to provide the facts. And in every situation that we have dealt with at the local-state government level with the FCC, the facts turned out to be on the local governments' side. So we are trying to respond to the Wall Street Journal, and we will—hope to do so. It depends upon whether the Wall Street Journal will print our article. And we are also trying to respond to the New York Times.

Mr. RADANOVICH. If you could——

Ms. PRAISNER. I did——

Mr. RADANOVICH. [continuing] provide the response to the committee——

Ms. PRAISNER. I will be more than happy to do so. Let me just say that——

Mr. RADANOVICH. Actually, I am out of time.

Ms. PRAISNER. Oh, okay.

Mr. RADANOVICH. Thank you very much.

Ms. PRAISNER. Thank you.

Mr. RADANOVICH. Thank you, Mr. Chairman.

Mr. UPTON. I will note that a reporter from the Wall Street Journal just left the room before you answered that question, so——

Ms. PRAISNER. Time——

Mr. UPTON. I don't know if they wrote this—if he is the author of that story or not, but I will—I am sure he will be looking for some of us a little bit later. I am going to give 1 minute since there are not Democrats that have not asked questions. I am going to yield 1 minute to Mr. Markey to ask a final question——

Mr. MARKEY. Thank you.

Mr. UPTON. [continuing] and then I will——

Mr. MARKEY. Thank you.

Mr. UPTON. [continuing] proceed.

Mr. MARKEY. Thank you, Mr. Chairman. Mr. Ellis, I just want to clarify, I think that what you are saying is that when you are offering access to consumers to the public Internet, that consumers can go where they want and access any lawful Internet content, but that the broadband video service is not necessarily going to offer consumers access to the public Internet per se. Is that correct?

Mr. ELLIS. That is pretty close.

Mr. MARKEY. Okay. Thank you. That helps us to understand the playing field on this. And, Mr. Mitchell, in your testimony, you say we have heard that part of the reason for excluding BDS providers from Section 104 stems from a concern for spam or viruses. Let me start by saying that we respectfully disagree with that claim as a technical matter.

Mr. MITCHELL. As a technical matter, that refers to whether or not it is possible to combine an access to the public Internet with a private-managed service on the same device. And as a technical matter, it is possible to do that.

Mr. MARKEY. And so on that, you would disagree with——

Mr. MITCHELL. Right.

Mr. MARKEY. [continuing] any assertions that that would be a technical obstacle.

Mr. MITCHELL. There are examples of things that do that today. We have had MSN TV2 which is a product that is in the market that delivers the public Internet service to a television set. I think

the issues that Mr. Ellis has referred to regarding the ability to negotiate for content rights on a private-managed network are legitimate issues, that is they are legitimate business concerns. But purely as a technical ground, is it possible to do this in a secure manner? Yes, it is possible to do it in a secure manner.

Mr. ELLIS. That is right.

Mr. UPTON. Your 1 minute is rapidly finishing up. Mr. Krause, did you want to respond? Do you agree with that?

Mr. KRAUSE. Yes, we have a much more conservative view on that, probably, than my colleagues at Microsoft. We have a lot of experience around the world where there are other IP video deployments going on. We are very mindful of the security issue and we spend a lot of time on it. In fact, you know, we all know our PC experiences here, don't have to be reminded of them, but I will say that it is a very important point with the content community. There are real security issues if you bring the public Internet into convergence with the intranet. Our companies don't let us do it. You don't have it on your laptop. It is a big issue and you probably open yourself up to some very serious security issues if you combine the functionality of one——

Mr. MARKEY. If the content community did not object, would there be a problem in sending it through?

Mr. KRAUSE. If the content——

Mr. MARKEY. If the content community did not object, Mr. Krause.

Mr. KRAUSE. I am not such a big fan myself of the content communities so to speak, but the customers will object because you have the difference between your PC experience being a one-on-one experience, and I can deal with being—getting a pop-up ad on my PC about Viagra——

Mr. MARKEY. You just said people—you couldn't do it because the content community wouldn't let you, and now I am proposing that they do let you, and you are saying, well, I am not a big fan of the content community. Well, they are on your side now. They are saying they will let you do it, and now you are saying you still won't want to do it, and I think that is the real problem, and I——

Mr. KRAUSE. No, I——

Mr. MARKEY. [continuing] am siding with Microsoft on this one.

Mr. KRAUSE. They have a valid——

Mr. MARKEY. I think Microsoft and the rest of these companies are all closer to the truth than you are, Mr. Krause.

Mr. UPTON. I think we will finished this conversation another time.

Mr. KRAUSE. Okay.

Mr. UPTON. Mr. Stearns?

Mr. STEARNS. Thank you, Mr. Chairman. Mr. Ellis, let me ask you a question. You have been out there with deployment and fiber technology over the last several years. Let us say we don't pass a bill here and we do nothing. You are not going to stop, are you? I mean, you are going to continue going forward, are you? Aren't you, or now you are not?

Mr. ELLIS. We are not going to stop.

Mr. STEARNS. Right. So, I mean, whether we pass a bill or not, companies like yourself will still continue deployment?

Mr. ELLIS. We are going to continue deployment.

Mr. STEARNS. Okay.

Mr. ELLIS. Will we do it as fast? Will it be as wide-spread? I gave you examples.

Mr. STEARNS. That is the question.

Mr. ELLIS. It is going to be 40 years at one a week. That is what it is going to take if we negotiate one franchise a week. I mean, you know, we don't want that. We want clarity, certainty——

Mr. STEARNS. Okay. We got——

Mr. ELLIS. Let us say this bill doesn't——

Mr. STEARNS. What is your 5-year plan for deployment?

Mr. ELLIS. What is what?

Mr. STEARNS. 5-year plan for deployment?

Mr. ELLIS. We have a 3-year plan.

Mr. STEARNS. What is your 3-year plan?

Mr. ELLIS. We are going to go 3 years to half the homes in our operating territory.

Mr. STEARNS. And how big——

Mr. ELLIS. 50 percent in 3 years.

Mr. STEARNS. [continuing] is that? How big is that?

Mr. ELLIS. How big is that? It is 18 million homes.

Mr. STEARNS. In 1½ years?

Mr. ELLIS. In 3 years.

Mr. STEARNS. In 3 years, okay. Uh-huh. Uh-huh.

Mr. ELLIS. That is our game plan. If we don't get this legislation or get a Texas-type in each of our States——

Mr. STEARNS. Okay. Now, let us say we do pass this legislation and it is pretty much like you like, what will your 3-year plan look like then?

Mr. ELLIS. Without the legislation?

Mr. STEARNS. With the legislation.

Mr. ELLIS. With the legislation? Well, we are going community by community with the initial places——

Mr. STEARNS. Well, I am just—Mr. Ellis, I am just trying to get a contrast between what your 3-year plan is without this legislation and what you perceive your 3-year plan would be——

Mr. ELLIS. If it——

Mr. STEARNS. [continuing] with this legislation.

Mr. ELLIS. If we do not have this legislation, we will deploy first in Texas because we have the State statute that lets us deploy without going through the franchise process. We will go to every single place we can in Texas first, and that is roughly about 40 percent of our homes. That is an estimate. That is where we will go first, and then we will go to the next State that passes a legislation if there is——

Mr. STEARNS. So you will go State by State?

Mr. ELLIS. Yes.

Mr. STEARNS. Okay. Mr. Putala, Mr. Rehberger has a quote here that staff has put in place and I will just quickly read it. "The assumption in the bill that those who want to compete in offering communications services to business/residential customers can simply build their own network is mistake due to basic economic realities." So I think Mr. Rehberger went on to say that a rational marketplace would never undertake such an effort, but, I think, Mr.

Putala, the question is isn't EarthLink going to—actually doing this right now? And what would be your response to his comment?

Mr. PUTALA. We would note that we are trying to build out a new WiFi municipal network. They are working in partnership with cities around the country. But, we still rely on commercial arrangements with folks like SBC so that we can reach the vast majority of our members. The municipal WiFi initiatives are literally—we don't break ground in Philadelphia for another few months. We are trying to build out these new networks to have new options, new pipes, to more homes, which I think improves everybody's market conditions.

Mr. STEARNS. Would I be fair to say though, based upon what you are doing in Philadelphia, that you are sort of contradicting what Mr. Rehberger says or not? Do you agree with him or disagree with his statement?

Mr. REHBERGER. Might I clarify?

Mr. STEARNS. Well, I am going to give you a chance.

Mr. REHBERGER. Okay.

Mr. STEARNS. I am just trying to put it to Mr. Putala——

Mr. PUTALA. I don't——

Mr. STEARNS. So he basically says that you are irrational for doing this because it doesn't make economic sense——

Mr. PUTALA. Well——

Mr. STEARNS. [continuing] yet I think you are doing this—EarthLink is doing this in Philadelphia.

Mr. PUTALA. COMCAST also said we were irrational for doing it in Philadelphia.

Mr. STEARNS. Okay.

Mr. PUTALA. But it is going to be a challenge. It is going to be hard, and I think that we are years away from having the same kind of ubiquitous connections to—with multiple pipes to everybody's home——

Mr. STEARNS. So you agree with him then? You would agree with him or disagree with him?

Mr. PUTALA. I would agree with him that the challenges of building out new networks are significant indeed.

Mr. STEARNS. Okay. Mr. Krause, my understanding is that Alcatel's services as a vendor for WiFi and other wireless systems. You have services for these. Do you agree with Mr. Putala and Mr. Rehberger in billing out these particular WiFi systems?

Mr. KRAUSE. There are a number of technology domains in which we are involved, both wireless and wireline, so we are involved in——

Mr. STEARNS. Yes.

Mr. KRAUSE. [continuing] the WiMax partnership.

Mr. STEARNS. Does it make economic sense for you to do this? Do you sort of feel it does make economic sense, or are you saying that you perhaps agree with Mr. Rehberger and perhaps with what Mr. Putala's saying, it just makes no economic sense, but they are still going ahead. I mean, what is your position here? I mean, can you come out——

Mr. KRAUSE. On the wireless?

Mr. STEARNS. Yes.

Mr. KRAUSE. Yes, on the wireless side, especially given the recent movement on the digital television transition so that we are opening up some spectrum. There are some great technologies becoming available that will make reasonable business cases possible for delivering certain kinds of service over wireless networks.

Mr. STEARNS. Okay. Mr. Salas? Here you are at Verizon Wireless and how do you feel about this? Do you think there is economic reality you are not paying attention to, or are you able to go ahead with WiFi wireless services?

Mr. SALAS. We have evaluated WiFi and what it takes and what it can provide and we have not found what we thought to be a compelling business case, and so we continue to watch. I have built a number of networks in my career. It is complicated. It is difficult. And there definitely is no free ride here, so I am anxious to see how others here pull this off and actually deliver a working system.

Mr. STEARNS. Okay. Mr. Rehberger, I will let you have the last word on that.

Mr. REHBERGER. Well, the essence of my comments really related to a ubiquitous network around the country, similarly situated to what the Bell companies have today, not only for consumers, but businesses, and my only point was this is why we need for competition. We need network sharing and we need network sharing with the right regulatory framework so that companies like ours and others like ours can share the network that—somebody used the word 100-year monopoly, okay, it took to get the Bells to build that. Nobody is going to build that same network again. Clearly, in certain cities, even in certain towns, there is an ability based on the geography, based on even the atmospherics, okay, in terms of using wireless, where there is an ability that you can build out certain pockets. But just as an example, you know, if a cell tower has—and I don't know these terms—but a cell tower might have two, or three or four T-1s with a service and cover a few city blocks. There are probably a thousandfold times worth of telecommunication packets in voice that would—that you could never service with a cell tower. So you are going to need fiber. You are going to need landlines. And you are going to need access, okay, to the last mile to the customer. And that is the issue from a telecommunications standpoint. We think this bill somehow—this, you know, this idea that if you become a packet provider, you no longer have the uniaccess which was under the Telecom Act of 1996, and there are implications that Bell companies can take away or have the ability not to offer even special access tariffs. It takes the competitors out of business. And those are the protections that caused the innovation and price cutting that Mr. Ellis mentioned at the beginning of his testimony. It wasn't the R Box that voluntarily cut prices. It wasn't the R Box that rolled out new technology. It was the vendor, it was the companies like ourselves in the early days like MCI and later on the Celex, that really brought to fore this technology change you are seeing today.

Mr. UPTON. Thank you. Ms. Cubin?

Mr. STUPAK. Mr. Chairman, what about this side?

Mr. UPTON. Everybody has had questions there. These members have not asked any questions yet. You have asked 5 minutes, right?

Mr. STUPAK. Right. But I thought you said you were going to add 1 minute.

Mr. UPTON. Well, Mr. Markey asked for 1 minute to clarify an earlier question.

Mr. STUPAK. Okay. And then I will ask——

Mr. UPTON. You have——

Mr. STUPAK. [continuing] for 1 minute to clarify a question I asked earlier after Ms. Cubin.

Mr. UPTON. Okay. Ms. Cubin?

Ms. CUBIN. Thank you, Mr. Chairman. I—everything I do here has to do with rural America and trying to make sure that rural America is served as well as urban America, and that we have all of the same benefits. Mr. Mitchell, I would like to start with you, and you said that you are providing broadband video software and equipment to Comcast, Verizon and to SBC. Do you have any rural customers right now?

Mr. MITCHELL. We do not. Actually, just for clarification, we don't supply equipment, just software.

Ms. CUBIN. Oh, just software?

Mr. MITCHELL. And at this point, our customers—our announced customers are Comcast, Verizon and SBC in this country.

Ms. CUBIN. Realistically, can mid- or small rural companies buy your technology today?

Mr. MITCHELL. Yes, absolutely. The——

Ms. CUBIN. Now, realistically?

Mr. MITCHELL. Realistically, our technology is in the—the IP technology is in the early roll-out stages, and it will take some time to scale that out, but ideally we would like every operator to be able to take advantage of the software and to be able to support them in that role-out.

Ms. CUBIN. Well, ideally, I would like that too, and I will be watching.

Mr. MITCHELL. Yes.

Ms. CUBIN. Mr. Yager, many of the small Telcos in my district tell me that they have a very difficult time, if not impossible time, to negotiate retransmission agreements with their programming. You know, I mean with networks. Is there a reason that you can tell me from any of these perspectives why that is?

Mr. YAGER. Not really. I can't, not knowing the specifics.

Ms. CUBIN. Well, I don't want to name any specific networks, but what I'm kind of thinking is that there are a lot of little small companies that they just don't want to be bothered with.

Mr. YAGER. Well, under the Law, if the cable system has less than 1,000 subscribers, there is no re-tranmission consent or must-carry requirement in effect. And so as you get into rural areas, for the most part, the smaller cable companies are not affected at all by must-carry or retransmission.

Ms. CUBIN. I am talking about over 1,000 customers.

Mr. YAGER. Okay. If it is over 1,000, without knowing the specifics, I know of only—the gentleman on my right has just negotiated a contract with somebody who withheld their services for 7 or 8 months, but I don't know of any in the Wyoming area who have withheld their service from the cable companies. I mean either on retrans or must-carry.

Ms. CUBIN. Okay. I am not—well, I will check further into that because——

Mr. YAGER. That would be——

Ms. CUBIN. [continuing] I have received complaints and the complaints are directed at actually a specific network, and so I will just talk to you privately as to——

Mr. YAGER. That is fine.

Ms. CUBIN. [continuing] whether or not——

Mr. YAGER. I would be happy to——

Ms. CUBIN. [continuing] that is——

Mr. YAGER. [continuing] look into it for you because——

Ms. CUBIN. Okay.

Mr. YAGER. I am not aware of any in Wyoming at all that have withheld.

Ms. CUBIN. Okay. Small companies want to pool their resources and share a head end. Does NAB have any policy prohibiting this at all?

Mr. YAGER. No, we do not. If they—but if they pooled their resources, shared a head end, and hand over 1,000 subscribers, then they would be subject to retransmission and——

Ms. CUBIN. Exactly.

Mr. YAGER. [continuing] Must-carry requirements.

Ms. CUBIN. Right. Do broadcasters have any concerns about their signals being carried on an IP network?

Mr. YAGER. Again, we are looking for a level playing field for everyone, and the answer is, providing that the playing field is level, that we have retrans and must-carry rights across all video providers. No, we do not have any problem with that.

Ms. CUBIN. Good. Thank you, Mr. Chairman. I don't have anything further.

Mr. UPTON. Mr. Walden?

Mr. WALDEN. Thank you, Mr. Chairman. Mr. Yager I want to follow up on that because I am trying to figure out—I am a, you know, I am a radio guy, not a TV guy so stick with me on this video stuff. I am trying to figure out though if local—and the local is a really important issue for broadcasters, especially television broadcasters, and if your programming is put up on the Internet somehow, and I can dial into your station here in Washington, D.C., and watch whatever you have, isn't that a problem?

Mr. YAGER. Well, that is a major problem if the Internet takes a network program into an area that we are——

Mr. WALDEN. Right.

Mr. YAGER. [continuing] licensed for with our network or contracted——

Mr. WALDEN. Right.

Mr. YAGER. [continuing] with our network. That would be a major problem.

Mr. WALDEN. And so how do you stop that in this environment?

Mr. YAGER. Technically, I can't speak to it, but we have stopped it so far. I mean, Internet providers are not carrying network programming outside—a matter of fact, I am not sure if they are even carrying it. There was a case, as you all know, that New Orleans, when Katrina hit——

Mr. WALDEN. Right.

Mr. YAGER. —WWL and WDSU put their continuous news coverage on the Internet but there was no network——

Mr. WALDEN. That is locally originated.

Ms. YAGER. All local originated programs.

Mr. WALDEN. But is there any prohibition of an IP provider from doing——

Mr. YAGER. Yes. If an IP provider were to take our signals without our permission and put them on there, they would be violating the retransmission consent laws and that is where we would have control over who gets to see our network——

Mr. WALDEN. All right. So you are not too concerned about that issue.

Mr. YAGER. Well, I am always concerned about the pirating of our signals, and as Congressman Cubin knows, and I would be very concerned in Wyoming that the Colorado or Denver stations be brought into all of Wyoming in stations——

Mr. WALDEN. Right.

Mr. YAGER. [continuing] in Cheyenne and Casper would then—would lose their network-based service——

Mr. WALDEN. But that is——

Mr. YAGER. [continuing] and would lose its syndicated programming rights before we contact for people like Oprah Winfrey Show and——

Mr. WALDEN. Yes. I mean, I have enough of those issues with XM and Sirius dropping programs——

Mr. YAGER. I understand that.

Mr. WALDEN. [continuing] in on top of where I thought I had market exclusivity for the product I am buying. But, that is another subject for another day. Mr. Mitchell, do you support broadband video service providers being required to integrate Internet access into the broadband video service? Is that something Microsoft supports?

Mr. MITCHELL. I don't think that forcing an integration of disparate services together is the right way to go. For one thing, it is not clear that consumers actually want that force-cum combination. I think making it available, having an option, is perhaps a nice thing if it makes good business sense. But, legit, just forcing it together, no.

Mr. WALDEN. Okay. One of the concerns I obviously hear about, in addition to every city in my district, I have gotten the same paragraph from—individualized, of course—but concern about franchise fees and about PEG and all of that. I even—some of them apparently have my Blackberry address so I will have to figure that out. But, Mr. Mitchell, I wondered—the other issue that comes up a lot is E911, and how are the E911 requirements tailored, if the E911 requirements play to VoIP, do they have any—do you have any concerns about types of services that can be included in the bill's definition of VoIP? Do other people have comments on that issue?

Mr. MITCHELL. Well, I think my sort of overarching comment regarding any services like E911 that are—like 911—that are attached to phone service as we know it today, traditional telephone service, that you apply the E911, or, you know, future versions through services that are substitutive—substantially substitutive,

so my examples are, you know, the Xbox, Instant Messaging clients, Xbox Live Game Services that do not make sense to apply those kinds of provisions to because they are not substantive——

Mr. WALDEN. Well, if it works like a phone——

Mr. MITCHELL. If you have the expectation that you pick it up and you dial 911 and you get somewhere, you pick it up and you dial 1-800-Dominos, you get Dominos. You know, then it is a phone.

Mr. WALDEN. All right.

Mr. MITCHELL. So——

Mr. WALDEN. Substitution test. Ms.—is it Praisner? I am sorry.

Ms. PRAISNER. Praisner.

Mr. WALDEN. At the beginning, how many franchise fees—one of the—and this is really difficult stuff for me because you have incumbent providers that go clear back to Marconi. Not Mr. Yager himself, but Marconi, and then everybody says then——

Mr. PRAISNER. You and I won't care then.

Mr. WALDEN. [continuing] comes in—I mean, you don't pay a franchise fee to have broadcast signal, but cable shows up with wire and they, you know, disturb your streets and whatever they—he doesn't, but others probably have, and—what about satellite video providers? You don't have a franchise on them, do you?

Ms. PRAISNER. No. They also don't provide local PEG channels.

Mr. WALDEN. That is true.

Ms. PRAISNER. And that is the big——

Mr. WALDEN. Is that really the issue here?

Ms. PRAISNER. Well, that is part of the issue.

Mr. WALDEN. The other part is just the revenue——

Ms. PRAISNER. The right-of-way issue and the way you calculate a social obligation and participation in that social obligation.

Mr. WALDEN. All right. All right. Thank you.

Ms. PRAISNER. Thank you.

Mr. WALDEN. I am out of time. Thank you, all. I appreciate your testimony.

Mr. UPTON. Before we adjourn this panel, Mr. Stupak has one last question to clarify.

Mr. STUPAK. I thank you, Mr. Chairman. I appreciate the courtesy. Since in the 1996 Act, myself and Mr. Barton wrote the right-of-way provision that became part of the 1996 Act. So I want to ask Ms. Praisner, because Ms. Blackburn asked a question about the rights-of-way and I don't—I was watching in my office and I didn't think you had a chance to explain it, and I want to make it—explain to us all how it works in the real world.

If you look at page 61 of the draft, it says that the service provider shall ensure the safety of the property. So even if the local government has the opportunity to enforce the provision after in effect, how does it work in the real world? Could you explain that for us? Because I think it would be——

Ms. PRAISNER. Well——

Mr. STUPAK. [continuing] beneficial for most of us.

Ms. PRAISNER. [continuing] right now, of course, there is an—franchise agreement with the local government with requirements for the right-of-way management issues and requirements as far as when they come in for permits what, where, and how they will dig,

and a variety of issues. And there is also the relationship that has some obligations because it is a contractual relationship for rent of the local right-of-way.

The concern with that language is that although there is language on the next page that seems to suggest that the local government has some capacity, the way this is written is—and as I indicated to the Chairman, we are more than happy to work through. The way this is written, it is the local—it is the provider who shall ensure and I am not sure to whom and how and it would seem to me that it should be the local government setting the requirements from a public safety perspective. Because our rights-of-way right now are obviously a very important issue. They always have been. But in this era of post-9/11, the issues of public safety and access through those rights-of-way are even more critical.

Mr. STUPAK. Thank you. And thank you, Mr. Chairman.

Mr. UPTON. Just one note. I think that that is the same language we got from the Cable Act. I think it is pretty much identical. But we will continue to work and I am happy to say we are going to hear again in about 5 seconds, the votes. There it is. See? And this panel is now excused. And we have a series of votes on the House floor, so we will start the second panel at 3:10.

[Brief recess]

Mr. UPTON. I know other members are watching from their offices as I often do at this point. So now that they see we are going to get started, they are going to listen attentively and come down and ask questions. It has been a long day. I understand at least one of you has to leave early to get a plane to go back. So we will start the time clock.

Again, we appreciate the testimony that has come in. And I should say for those watching, we are joined by Dr. Frank Bowe, Professor, School of Education and Allied Human Services, from Hofstra University; Mr. Tony Clark, President of the North Dakota Public Service Commission, on behalf of the National Association of Regulatory Utility Commissioners; Mr. Harry "Hap" Haasch, great guy from the good State of Michigan, Executive Director of the Community Access Center in Kalamazoo for the Alliance for Community Media; Mr. Gene Kimmelman, Senior Director of Public Policy, the Consumers Union; Mr. Delbert Wilson, General Manager of Industry Telephone Company; and Mr. Joel Wiginton, Vice President and Senior Counsel for Sony. Dr. Bowe, let us start with you. Welcome.

STATEMENTS OF FRANK G. BOWE, PROFESSOR, SCHOOL OF EDUCATION AND ALLIED HUMAN SERVICES; TONY CLARK, PRESIDENT, NORTH DAKOTA PUBLIC SERVICE COMMISSION; HARRY HASSCH, EXECUTIVE DIRECTOR, COMMUNITY ACCESS CENTER; GENE KIMMELMAN, SENIOR DIRECTOR OF PUBLIC POLICY, CONSUMERS UNION; DELBERT WILSON, GENERAL MANAGER, INDUSTRY TELEPHONE COMPANY; AND JOEL K. WIGINTON, VICE PRESIDENT AND SENIOR COUNSEL, SONY ELECTRONICS

Mr. BOWE. Thank you, sir. Mr. Chairman, thank you for the hearing and for inviting me. And I do want to extend that also to the members on both sides. I'm appearing today on behalf of a

large number of organizations, people with disabilities, a very wide range of groups. And we all want to say we are very deeply appreciative of the language in the staff draft. Both the first draft and the second draft have some very positive, extremely meaningful language, in Section 207 and 405 especially. But it is very important language and it was not weakened at all from the first draft to the second draft. The disability community is really very, very delighted to see that. And we also want to tell you in light of all the comments this morning about some bipartisan friction here, but we have to end the friction at all between minority and majority sides. On the disability language, we have seen them working together very cooperatively and very effectively.

I want to say that going back with the 1996 Act, people with disabilities have always had to look to this Congress for accessibility language even though there are all kinds of millions of people with disability. Although so many disabilities, so many different levels of need, that we have never been able to get what we need from the marketplace. Rather, what we need here is a final accessibility language, and it is very important that we get it.

The third point I want to make is that the language that we have, accessibility now in the many—applies specifically and almost exclusively to the public's telephone network. But people with disabilities today are using the Internet. We are using technology that did not exist in 1996. And so we increasingly—we are living in a world beyond statutory and regulatory provisions for accessibility for people with disabilities. So we firmly need legislation, very important to us that there be a law in making.

And you may remember, Mr. Chairman, because you came to a demonstration that I did here in Rayburn. I did another one on the Senate side. And we have shaped most demonstrations about 512—second, which is about one-third as big. Then Mr. Ellis was talking about providing to his customers. So we are able to get disability accessibility including for the—at the level that we now have DSL and cable modems. We are about to achieve it, however—and I really can't emphasize this enough, but technology continues to evolve so rapidly and so exponentially that you count on—law making passed on while the technology is right in front of you. You have got to do the law making based on the technology you know will be coming, and technologies that you may not know be coming. In other words, we have learned very much from the many—we really cannot have law making about the last wave. We have really got to try to make it about the next one.

Give you an example, more and more videos now are being streamed over the Internet, and this is an example, this hearing. A number of people have told me they are not here but they are watching it on the Internet. Just one example of something that absolutely not in existence in 1996, which raises all kinds of questions, and one of which, very simply, is what about captioning? And we have captioning on television, cable, and satellite. All are captioned. But when you get to Internet streaming, it is not captioned. We now have some 30—phones and other PDA devices, not captioned. That raises all kinds of questions, so we feel very strongly at Mr. Markey's—the caption on your video is really much too important to spill over to the FCC's discretion, and for the FCC to

have a chance to review it every 4 years. This should not be the case. Captioning should be something that is brought into the statute as it is in the 1996 Act. It should be in the statute.

And while I am speaking of the 4-year review, that really should be two. Technology is developing so rapidly that to have a 4-year review is really much too infrequent.

People with disabilities, what we need is high-speed—we need it on all connections, and I can't emphasize that enough. When I do sign language with someone else, I am doing peer-to-peer. I am not doing—through the end of the cable architecture. It is a whole different arrangement than if I am doing peer-to-peer, I have to have high-speed in all directions and not just upstream and downstream. We will benefit in everyday communications and education on healthcare and in employment if we have these technologies, if we have them available everywhere, and if they are affordable. So thank you, Mr. Chairman and Mr. Markey.

[The prepared statement of Frank G. Bowe follows:]

PREPARED STATEMENT OF FRANK G. BOWE, DR. MERVIN LIVINGSTON SCHLOSS DISTINGUISHED PROFESSOR, HOFSTRA UNIVERSITY

Good afternoon, Mr. Chairman, Congressman Dingell and members of the Committee. My name is Frank Bowe, and I am pleased to appear today to provide invited testimony on the second staff draft of a bill to revise and extend the landmark Communications Act of 1934. I am a professor at Hofstra University, on Long Island. I am testifying on my own behalf. This testimony is supported by the Alliance for Public Technology, American Association of People with Disabilities, American Council of the Blind, American Foundation for the Blind, Association of Late-Deafened Adults, California Coalition of Agencies Serving the Deaf, Hard of Hearing, Inc., Communication Services for the Deaf, Deaf and Hard of Hearing Consumer Advocacy Network, Deaf and Hard of Hearing Service Center Inc., Inclusive Technologies, National Association of the Deaf, Northern Virginia Resource Center for Deaf and Hard of Hearing Persons, Self Help for Hard of Hearing People, TDI (also known as Telecommunications for the Deaf Inc.), WGBH National Center for Accessible Media, and World Institute on Disability. These organizations together represent millions of Americans with disabilities who have a vital interest in making sure that the communications technologies of today and tomorrow will meet their communication needs.

Members of the Committee, our community has already come before you once this year to address accessibility issues, when Karen Peltz Strauss testified to the Subcommittee on Telecommunications and the Internet on April 27. My testimony builds upon her statement, with the important advantage of being able to applaud your staff draft's treatment of the issues she discussed.

Permit me to preface my remarks by noting that Americans with disabilities are daily using, and greatly benefiting from, Internet-enabled communications technologies that have emerged since enactment of the 1996 Telecommunications Act. When I demonstrated broadband two weeks ago in the Dirksen Senate Office Building, Senator Conrad Burns of Montana spoke movingly about a 12-county area in his State that did not have a single physician. Broadband, the Senator reported, is crucial to the well-being of his constituents. To illustrate, in the 1970s Howard Rusk, a pioneer in rehabilitation medicine, told me that life expectancy for people with quadriplegia was about five years post-injury. Today, it is a great deal longer, due to increased knowledge about how to treat such secondary conditions as autonomic dysreflexia. But that expertise is not universal among primary-care providers. It resides at the Rusk Institute at NYU, the Shepherd Center in Atlanta, and at the Rehabilitation Institute of Chicago. Broadband extends their ability to provide quality care to Dearborn, Michigan, and Cheyenne, Wyoming. To use another example, dermatoscopy takes pictures several skin layers deep. Broadband instantly transmits the images to a specialist. As a result, a dermatologist in Dallas/Fort Worth can diagnose a skin condition of a patient in Clearwater, Florida, as accurately as can a local one.

Likely, those dozen counties in Montana do not have a single sign-language interpreter, either. Broadband can connect consumers with interpreters irrespective of

geographical location. This has the added advantage of eliminating the wasted travel time of interpreters, making them more available to meet our needs.

Let me shift now to consumer use of the Internet and of broadband. A report this year by the Pew Internet and American Life Project found that 68 percent of adults use the Internet. The Census Bureau reported, on the same day that I demonstrated broadband in the Senate, that home access to the Internet has now passed the halfway mark nationwide. A large and rapidly growing proportion are broadband subscribers who use it not only for shopping but also for public policy participation, education, and communication with family, friends, and coworkers. For a glimpse into the near-term future, consider that the teen site MySpace.com had more hits in August than did Google: 9.4 billion page views. New users of the site are signing up at a rate of better than three million a month. This is yet another indication that broadband is here to stay.

Here is my point: Consumers are driving the broadband engine. They are rapidly making broadband an indispensable part of the fabric of everyday life in this country. Consumers should have a seat at the table as broadband policy is set. That is why I so much appreciate the fact that the staff draft offers much-needed disability consumer protections. It is also why I appreciate this invitation to testify today.

People with disabilities, simply stated, believe that broadband should be available everywhere, at affordable rates. Our aim should be to accelerate the creation of a broadband umbrella that covers the country. Our policy should be to regulate evenly across platforms, so as to ensure disability access across all communication platforms. This means applying the same standards to wireline, wireless, cable, and satellite providers and suppliers. That, in turn, necessitates federal rules for accessibility.

People with disabilities, as well as their families—the Census Bureau reported this summer that 21 million American families include at least one person with a disability—friends, coworkers, and others, not to mention my students, will win with rapid deployment everywhere of broadband, particularly fiber to the curb and even to the home, featuring high speeds in all directions. It is not enough just to have it downstream, with much slower speeds upstream. Bidirectional peer to peer interactions at high speed enable each of us to be creators, and not just consumers, of broadband-provided content. While many of us use, and benefit from, today's level of DSL and cable-modem broadband, as I demonstrated to this Committee in June, and to the Senate Commerce Committee last month, high-speed connections in both directions, with rapidly refreshed frames, greatly improve video communications, particularly in sign language. In this as in other areas, we must bear firmly in mind a lesson learned from the 1996 Act: legislation needs to address, and foster, tomorrow's technologies and not just today's.

With advanced telecommunications products and services, our daily lives will be improved, as we access more information, make better-informed consumer choices, and enjoy much richer and more rewarding interactions with family and friends. Our education will no longer be limited to geographically proximate institutions. Our employment will be supported and our ability to work flexible schedules enhanced.

Critical to these improvements are the disability consumer protections contained in the staff draft. The organizations supporting my testimony today greatly appreciate inclusion of protections in this draft to ensure that broadband products and services are accessible to and useable by people with disabilities. For example, the staff draft requires that video be captioned when it is streamed over the Internet, as it increasingly is. Currently, section 713 of the Communications Act mainly requires captioning only for broadcast, cable-cast, and satellite television programming, largely because Internet video was not available in 1996. Similarly, the staff draft, in section 207, defines relay services to include video, and not just text, communications for people who are deaf, hard of hearing, and/or speech-impaired. It calls for interoperability of Internet-enabled relay services, including video relay.

When Congress amended the Communications Act in 1996, it added section 255, calling for equipment and services to be accessible to and useable by people with disabilities. But to date, that section has been interpreted to apply only to the public switched telephone network, not to the Internet. This was, of course, because scarcely anyone used the Internet for voice or video communications in 1995 and early 1996. The staff draft, in section 405, extends these accessibility requirements to broadband products and services. And, recognizing that today's telecommunications products are electronic, into which accessibility can easily and readily be incorporated during the design stage, the staff draft requires that makers and providers of new broadband products and services provide access unless doing so would present them with an undue burden. The 1996 Act, reflecting an earlier era, one characterized by already-existing products and services, allowed a lower readily

achievable standard. As Ms. Strauss noted in her April testimony, the fact that today's communications Internet Protocol technologies rely more on software-based solutions makes it easier, faster, and less costly to implement access features than had been possible with many previous telecommunications technologies

All of this matters, and matters urgently. Just three out of every ten adults with disabilities today are employed. Broadband promises to help because it is always-on, high-speed, voice/video/data communications. Many deaf and hard of hearing Americans are using instant messaging daily, now video as well as text. They are signing to each other, using digital video cameras and webcams. Signing over video connections offers the closest possible functional equivalence to voice telephony between persons who can hear. In the workplace, IM and video conferencing permit instant accessibility. They lower the cost to employers of accommodating a worker who is deaf, by alleviating the need for interpreting services except for formal, in-person meetings.

The House draft access language for broadband equipment and services is vital for people who are blind or visually impaired who must often struggle with graphical-only interfaces or other inaccessible equipment and service which, increasingly, restrict access to vital broadband communications. In addition, because broadband is digital, it also speeds up conversion of written material into formats that people who are blind can use—large print, speech, and even Braille. This lowers the cost to employers and educators of accommodating people who are blind or visually impaired.

And of course broadband supports telecommuting. While some Americans with disabilities may not opt to telecommute, others will, because broadband helps people with chronic health conditions or physical disabilities to expend far less energy in nonproductive commutes and to leapfrog those transportation and architectural barriers which remain.

With respect to education, the 2004 reauthorization of the Individuals with Disabilities Education Act explicitly permits video conferencing for Individualized Education Program (IEP) team meetings. Teens with disabilities may participate in video conferencing sessions, as may parents with disabilities, through broadband-enabled access, including remote interpreting and document accessibility. As a university professor, I am daily reminded how colleges increasingly use electronic media for everything from course registration to assigned readings to submission of student work. I found it necessary this fall to write, for Hofstra University, a primer on how to make our Internet2-based digital environment accessible to students, staff and faculty with disabilities. I see a similar need here. Broadband, if made accessible in the ways envisioned by the staff draft, will greatly contribute to the post-secondary education of people with disabilities.

Broadband, I am convinced, will not only improve the quality of medical care for our most vulnerable citizens but also will help to conserve public resources. To illustrate, while people with disabilities account for 16% of Medicaid beneficiaries, because their annual medical costs are higher than are those of Medicaid recipients who do not have disabilities, their care accounts for 43% of Medicaid spending. In 2003, for example, Medicaid costs for persons with disabilities added up to $80 billion. Broadband will help us to enhance quality of services while also constraining costs. It will do so by enhancing preventative care, by permitting better monitoring of people's health, and by enabling them to live and work more productively.

Broadband helps older Americans live at home longer, by affording them instant contact with family and caregivers, reducing costs of institutional care. Similarly, wireless broadband supports independent living in the community of persons with intellectual disabilities and many with mental and emotional disorders. This includes individuals who were deinstitutionalized pursuant to the Supreme Court's 1999 decision at Olmstead. Two cell phones, the TicTalk, from Enfora, and the Firefly, from Firefly Mobile, are illustrative. Each has just a few buttons. Each is preprogrammed with numbers for family, employer and emergency support personnel. By touching just one button, a person can instantly be in two-way communication to ask questions, receive directions, and request in-person assistance. These cell phones promise to allow a small team of counselors to provide independent-living and employment support to a large number of individuals in a community, at much lower per-person, per-year support costs than are otherwise available. Manufacturers could add two-way video to these handhelds, for even easier and more effective two-way communication.

Before I close, let me not overlook universal service. I know that this Committee and the Federal Communications Commission as well prefer to deal with universal service next year rather than this. Universal service is absolutely essential to the continued vibrancy of our Nation's public communications. We must find ways to protect and preserve it despite present threats to its funding base as our nation

shifts to Internet-enabled communications technologies. Specifically, we must make sure that providers of these technologies are equally bound to contribute to the support of universal service programs, including relay services, that are designed to make communications accessible and affordable for all Americans.

In closing, let me thank you for considering our views and, in the staff draft, for responding to the needs of people with disabilities. For Americans with disabilities, a new national policy on broadband is urgently needed. Many of the communications technologies we use today, and those we are excited to think about using tomorrow, have and will emerge in the post 1996 Telecom Act "world". Critically important disability access provisions will exist only if Congress enacts an updated framework for telecommunications.

Thank you.

Mr. UPTON. Thank you. We appreciate your testimony, for sure, and appreciate your wonderful work in this issue over the years. And I have—I know Mr. Engel and I, Mr. Markey, too, have all appreciated your leadership and participated in your demonstrations. Mr. Clark?

Mr. BOWE. Thank you.

STATEMENT OF TONY CLARK

Mr. CLARK. Thank you, Mr. Chairman. It is an honor to be here, and I thank you for the invitation—and Mr. Markey as well. It is especially an honor to be before your committee because, although I have been proud to call North Dakota home for about the past 20 years, there are an awful lot of Clarks, both present and past, who call Michigan home, so it is a State that I certainly have a very warm spot in my heart for.

Today I am here to represent——

Mr. UPTON. You are supposed to go like this.

Mr. CLARK. All right.

Mr. UPTON. Where you are from.

Mr. CLARK. Alpina, Towwes, and all points in between. It can be somewhat of an intimidating thing to try to represent quote/unquote the view of the States or the State Commissions, because it is sort of like asking someone, well, what is the view of Congress. Well, we are an organization and association which is made up of 50 different States, some of us Republicans, some of Democrats, some appointed, some elected. So what I will try to do in just a very brief overview of our written testimony is to highlight those points where there seems to be some consensus amongst State regulators, and to the extent that there may not be consensus, if I offer sort of my own opining as one State official, I will try to identify that as well.

Clearly, telecommunications markets are changing, and the old regulatory constructs that we have had, both at the Federal and State level, are crumbling around that technological innovation that has happened. And in response to that, State regulators have, I think, a very commendable job of trying to assess where the markets are today, what are roles are and perhaps should be, and what the Federal role is and perhaps should be in any future Telecom Act. We have come out with a set of principles that we think should be embodied in any changed to the Telecommunications Act of 1996, and I would just really highlight two main points that State Utility Commissioners seem to have general agreement upon.

The first is that whatever happens on a going-forward basis should be technologically neutral, that the means of transmission

really shouldn't be the important and the driving factor. And to the extent that there are regulations that are placed on telecommunications, the things that State Utility Commissioners look at as really the most important factors where there probably will be the most regulatory intersect on some level or another is where there are an essential service provided. And when we say essential service, honestly, what we are probably talking about is some sort of either POTS—plain old telephone service—or a replacement for that sort of one basic primary line that consumers have access to, where there is critical infrastructure involved and where there is some sort of market power. Where any one of those things doesn't exist, the need for regulation goes away. States have been stepping back in dramatic fashion from economic regulation, and we would anticipate that that would continue to be so.

Once there is determined that there should be some sort of regulation, then what we have asked is that there be an analysis of core competencies, who does what best. We have stepped forward and said that we really believe that old end-point jurisdictions, interstate versus intrastate, it just doesn't make much sense anymore in today's Telecom market. Really what we should be looking at is who does what best? What level of government? And to that end, we have said that we think the Federal Government job does a pretty good job probably of setting some standards, and maybe more of that has to take place, but that State government and State commissions have really historically been the best at adjudicating specific issues and enforcement measures, at building records, and at carrying forward in a very fact-specific manner anything that may come up that we can't predict today.

As far as sort of what we see good in the draft, what we see potentially needing some more work, we do appreciate that it establishes a baseline on some social service policies like E911, Universal Service, and we appreciate the fact that it does acknowledge the core competency of State commissions, which is often enforcement, although we would like to see perhaps more flexibility for States to deal with specific situations. And where we see more work needed is something that has been talked about a number of times here today, but is concern about that just throwing in a new silo which could create these same types of arbitration that we have seen in the past rather than looking at things from a more structural and holistic standpoint.

With that, I will look forward to any questions you might have.

[The prepared statement of Tony Clark follows:]

PREPARED STATEMENT OF HON. TONY CLARK, PRESIDENT, NORTH DAKOTA PUBLIC SERVICE COMMISSION AND CHAIRMAN, TELECOMMUNICATIONS COMMITTEE, NATIONAL ASSOCIATION OF REGULATORY UTILITY COMMISSIONERS

Chairman Upton, Ranking Member Markey and members of the Subcommittee, thank you for the opportunity to testify today. I am Tony Clark, chairman of the NARUC Telecommunications Committee and president of the North Dakota Public Service Commission. NARUC represents State utility commissions in all 50 States and US territories, with oversight over telecommunications, energy, water and other utilities.

We appreciate the opportunity to share our perspective and insights about the staff discussion draft on Internet protocol and broadband services, which we view as the beginning of an important dialogue at this Subcommittee about the appropriate legal and regulatory framework to encourage innovation and protect consumers in today's evolving communications market.

The telecommunications industry as we know it is undergoing tremendous transformation and restructuring. The long-distance industry has mostly disappeared and once mighty competitors are being absorbed by their former adversaries in the local phone business. New players have emerged in the nascent "nomadic" VOIP industry and a growing number of younger consumers are "cutting the cord" to use their wireless phone as their only phone.

Today's marquee battle is the grand duel between cable and baby Bell companies over who will dominate the "triple play" or "quadruple play" market of voice, video, data and wireless bundles, but this battle could easily give way to one between the network owners and the "edge" providers like Yahoo!, Google and Microsoft whose next wave of disruptive technologies could turn today's giants into commodity providers. Or new wireless broadband offerings could flood the market with "last mile" transmission options, driving prices down and leading to another round of consolidation. Just last week, Sprint-Nextel announced a joint venture with four cable companies to deliver TV shows on cell phones, and BellSouth's chief technology officer referred to a search engine company as a serious potential competitor.

NARUC's members have embraced this new paradigm of innovation and change because we see it as a powerful engine of economic development and consumer empowerment in each of our States. Recognizing these seismic changes and a corresponding interest from Congressional leaders to reexamine the foundations of the Communications Act, NARUC commissioned a Legislative Task Force last year to take stock of the current legal and regulatory baseline and make recommendations on whether and how it should be revised. After listening to numerous stakeholders and intensive internal discussions, the Legislative Task Force reached two important conclusions:

The first was that any broad reform must be technology neutral. Even the leading luminaries and entrepreneurs in the telecommunications industry don't know where today's transformation will lead or end. In the chaos that is the genius of modern capitalism, they are constantly placing bets, forming new ventures, making mid-course corrections and sometimes losing big money when things don't turn out as expected. With that in mind, it struck us as untenable for policymakers to build a framework around any kind of technology, even a widely deployed one like Internet protocol. Such an approach would invariably choose winners and losers and ultimately distort investment decisions as capital and energy flowed to products in the best regulatory "silo."

The second conclusion was the development of our "functional federalism" concept, which is the idea that if Congress is going to rewrite the Telecommunications Act, it doesn't have to be bound by traditional distinctions of "interstate" and "intrastate," or figure out a way to isolate the intrastate components of the service. Instead, a federal framework should look to the core competencies of agencies at each level of government—State, federal and local—and assign regulatory functions on the basis of who is properly situated to perform each function most effectively. In that model, States excel at responsive consumer protection, efficiently resolving intercarrier disputes, ensuring public safety, assessing the level of competition in local markets and tailoring national universal service and other goals to the fact-specific circumstances of each State. Economic regulation is necessary only where there is market power and if robust competition one day removes the need for economic regulation of all types, we believe that will be a good thing.

This is not actually a new model. For the past several years, wireless carriers have been governed under Section 332 of the Act, which does not declare wireless to be interstate, but rather assigns appropriate functions to State and federal authorities. It assigns spectrum management functions to federal authorities, includes a rebuttable presumption of competitiveness for wireless carriers, and allows states to handle consumer protection and other terms and conditions of service. Wireless carriers are also allowed to avail themselves of State arbitration procedures for interconnection to the wireline phone network. Under this model, the wireless industry has already eclipsed the traditional phone business in total number of subscribers and is only growing stronger.

While NARUC's members are still analyzing the discussion draft, we want to raise a number of high level issues and serious concerns. First, we are concerned that this discussion draft is very technology specific by according special status to any service or infrastructure that utilizes "packet switching." While packet switching is supplanting circuit-switching and time-division multiplexing today, something else that may or may not be a successor protocol is invariably in the queue behind it. While it might take longer and require more dialogue among disparate stakeholders, we encourage you instead to pursue a technology-neutral approach that looks to the salient features of each service, such as whether it has market power, whether it is interconnected to the Public-Switched Telephone Network (PSTN) or

its successor, and whether it is selling access to networks supported by universal service.

Consumer protection:

We commend the staff for recognizing State expertise and experience and the vital role we play in handling consumer complaints. A recent survey found that in just 20 State commissions, over 230,000 consumer complaints had been handled in 2004. These complaints are generally resolved on a one-for-one basis and the majority take only a few weeks through informal processes.

We are concerned, however, that the discussion draft takes a "one-size-fits-all" approach when it comes to consumer protection standards, without providing flexibility to the State agencies that enforce them. This is unfortunate because the same dynamism that brings exciting new products and services to consumers also produces a host of new complaints and novel misunderstandings, especially for products supplanting traditional phone service.

A particular case in point has been the national do-not-call list, enacted two years ago with great fanfare. Federal agencies, although they receive thousands of complaints a week, have issued only six (6) fines since its enactment, and States have provided the bulk of its enforcement. Even more importantly from the consumer's viewpoint, telemarketers were quick to exploit a patchwork of loopholes and "workarounds" to the federal rules and the calls kept coming. It fell to a handful of States to say that "no means no" could not be circumvented just because the consumer had made a purchase from the company 18 months ago or because the call was pre-recorded (which might actually be more annoying). Without that State flexibility, consumers would be in a much worse position.

NARUC doesn't object to federal consumer protection standards, but we do object to an approach that makes those standards a "ceiling" on State action and fails to give those who help consumers the tools, authority and flexibility they need to get the job done.

Interconnection:

We commend the staff for including interconnection rights between and among BITS, VOIP and telecom providers. In a networked industry, fierce competitors will always have to cooperate to operate a seamless network of networks, but there are frequent perverse incentives for one carrier or another to frustrate interconnection for anti-competitive reasons.

We are very concerned, however, that the draft federalizes the traditional State role of mediating, arbitrating and enforcing those interconnection agreements. Current law already includes a provision for the FCC to arbitrate interconnection agreements when the State commission does not act, but the isolated instances where this has been necessary have not generally gone well. In one case, a cable company in the competitive phone business had to spend 3 years and over $2 million to arbitrate an interconnection dispute at the FCC, even though it was eventually vindicated on every issue. Sending such disputes to federal courts or another forum would be even more onerous, with discovery rules and a multi-year process for resolving disputes that could be adjudicated in a matter of weeks at a State commission. We are concerned about the ripple effect that a backlog of such cases would have on the entire industry, especially when some traditional phone providers are already seeking to deny interconnection altogether to new competitors. The ability to interconnect seamlessly into the traditional phone system is the linchpin of success for many VOIP services.

Connectivity principles:

We applaud the staff for including proscriptions against blatant digital protectionism by network owners. Many broadband providers are under tremendous investor pressure to drive as many customers as possible to their proprietary voice, video and data products. While consumers can benefit from "intelligent networks" and compelling proprietary products, we hope the network owners' competitive strategies will turn on price, quality and features—not impairing competitors' products or imposing artificial bandwidth limits on consumers.

Public Safety:

We support the inclusion of an obligation for VOIP providers to provide 911 / E-911 capabilities to their consumers, and we commend the staff for preserving State and local assessment authority to continue supporting and upgrading the PSAP systems, but we are very concerned that the bill includes no State role to enforce those obligations and leaves the mediation and arbitration of interconnection to such facilities at the federal level. As discussed above, federalizing all the arbitration cases could lead to a dangerous backlog of arbitration requests. The need for a fast and

effective dispute resolution procedure is even more acute with the 911/E-911 system because the provider that controls the trunk lines and selective router has a 100% monopoly over these elements, and competitors need that access to do business—and it is always a local call.

Universal service:

NARUC supports efforts to more equitably distribute the funding base of the federal Universal Service Fund (USF) in a technology-neutral manner, although we believe such efforts must be accommodated by similar efforts to ensure the long-term sustainability of State programs. Today, universal service is a jointly shared responsibility between the States and the federal government, with 26 State programs distributing about $2 billion—or 28% of the overall national commitment to universal service. This joint approach benefits both "net donor" and "net recipient" states because it lessens the burden on an already sizable federal program and permits another option when federal disbursement formulas that "work" in the aggregate do not adequately serve a particular state or community.

Our concern is that any expansion of the federal base without a complementary clarification of State authority could create tremendous funding gaps. The impact of those gaps would fall disproportionately on consumers who rely on State programs, and would raise thorny questions about the equity of federal disbursement formulas.

Conclusion:

In conclusion, we appreciate your thoughtful consideration of our input and look forward to continuing a fruitful dialogue over the discussion draft and all the issues that it raises with the members of the Energy and Commerce Committee. As a next step, we would be pleased to work with you and your staff on an approach that preserves the strong points of the discussion draft before us, but is technology neutral and includes more vigorous and flexible procedures for consumer protection, interconnection, public safety and universal service.

Mr. UPTON. Okay. Thank you. Mr. Haasch, welcome.

STATEMENT OF HARRY HAASCH

Mr. HAASCH. Does the microphone work? Hello? Good afternoon, Chairman Upton. Good afternoon, Chairman Upton, Mr. Markey, and members of the subcommittee. I am sorry. I don't think I need two. Take one. My name is Hap Haasch and I am the executive director of the Community Access Center in Kalamazoo, Michigan. And I want to thank Chairman Upton for inviting me to testify today on behalf of the Alliance for Community Media, a national membership organization representing 3,000 public education and government access centers across the country.

Local PEG programmers produce 20,000 hours of new programming per week. That is more new programming than all of the broadcast networks combined. As you observed, Mr. Chairman, back in 1999, the Community Access Center in Kalamazoo provides a diverse programming schedule that can't be found anywhere else, reflecting a cross-section of society, and offering an empowering voice to those that may not otherwise have a chance to be heard. We believe the November 3 staff draft bill however might directly and substantially threaten the future of PEG programming throughout the nation. My testimony focuses primarily on the draft's PEG aspects. However, the Alliance supports the testimony of Counsel Member Praisner on behalf of local government organizations heard earlier today.

Let me give you a couple of examples of significant PEG programming around the country that are replicated in almost every community. The Kalamazoo Community Access Center, the one that I manage, we have provided PEG access programming for 25 years. We now average 2,100 hours per month of new program-

ming. 315 hours of that programming are brand new first-run. Just now, my staff is putting together a 4-camera live production shoot at the Kalamazoo Public Library, the major fundraiser of that organization in the community, that will combine staff, volunteers and interns for a 2-hour production that the local broadcast networks might give 30 seconds to.

During the 2004 election season, Chicago Access Network Television, CAN TV, ran 160 hours of local election coverage, including information on candidates for Presidential, Senatorial, Congressional and local elections. Media bridges in Cincinnati, Ohio, cablecast more than 15,000 hours of local programming, including programming for more than 80 religious organizations. Cambridge, Massachusetts, produces 50 hours of live programming per week, shows that include Crime Time, produced by the Cambridge Police Department. In Southern Oregon, Rogue Valley TV is the public access organization for 4 cities and 3 counties. They produce Rules of the Road by the Medford Police Department, a 1-hour monthly live call-in program primarily on traffic and pedestrian law. Albuquerque, New Mexico, Sandia Prep School begins its third year of producing the program Speak Out. It is the students that produce the program and provide all technical work on the series that features high school debate, dance, music performances including the orchestra.

PEG access is only possible if there are adequate funds to support it. The overwhelming majority of PEG funding comes from two sources. The first is monetary and in-kind support from cable operator that is above and beyond the 5-percent franchise fee. That is a critically important point. The second revenue stream for PEG access is a contribution by the local franchising authority of a portion of the 5-percent franchise fee for PEG. The November 3 House draft bill, however, would eliminate one of those sources of revenue and substantially reduce the other in our estimation. The combined elimination of PEG grants and the substantial reduction of franchise fee revenue available for PEG would result in a funding reduction for PEG access that could be nothing short of catastrophic for some centers across the nation.

Through the cable franchise process on capacity—PEG capacity issues, local communities, particularly in the renewal phase of their relationship, have analyzed their PEG access channel capacity needs and then adjusted their capacity in the final agreement coming out of renewal. The draft bill, however, would essentially kept PEG access capacity at current levels. This would have a particularly harsh effect on communities with older franchise agreements, many of which might currently have relatively few channels set aside for PEG. This is in an environment where there is exponentially increasing channel capacity on these new systems.

In conclusion, you are right, Mr. Chairman, when you said that community access centers give a media voice to those who might otherwise not be heard. Across the nation, PEG access centers put television in the hands of the people, not as passive consumers—a word I heard often this afternoon—but as speakers and information providers. In its current form, the draft legislation threatens to silence those voices because it would undermine the continued financial viability of PEG access centers, particularly those funded

above and beyond the franchise fee. We therefore ask that the draft be revised to ensure the continued viability of PEG access, the only truly genuine form of localism and diversity in the television medium.

The Alliance looks forward to working with you in making the necessary changes on the legislation to protect PEG access. Thank you for inviting me.

[The prepared statement of Harry Haasch follows:]

PREPARED STATEMENT OF HARRY "HAP" HAASCH ON BEHALF OF THE ALLIANCE FOR COMMUNITY MEDIA

Good morning, Chairman Upton, Mr. Markey and Members of the Subcommittee. I am Harry "Hap" Haasch, Executive Director of the Community Access Center serving the cities of Kalamazoo and Parchment and the townships of Oshtemo, Comstock and Kalamazoo, Michigan. I want to thank Chairman Upton for inviting me to testify today on behalf of the Alliance for Community Media, a national membership organization representing 3,000 public, educational and governmental ("PEG") cable television access centers across the nation. Those centers include 1.2 million volunteers and 250,000 community groups and organizations that provide PEG access television programming in local communities across the United States. Local PEG programmers produce 20,000 hours of new programs per week—that's more new programming than all of the broadcast networks combined. As reported in yesterday's *New York Times:*

> "For every hour of "Desperate Housewives" on ABC, the nation's 3,000 public-access television channels present dozens of hours of local school board meetings, Little League games and religious services. Not to mention programs like "The Great Grown-Up Spelling Bee," a spelling bee for adults that raises money for the Kalamazoo, Mich., public library . . ."

The Center for Creative Voices recently released a report that shows that as large group owners control more local broadcast stations in a market, local programming disappears, replaced by nationally produced programs that seek to draw larger audiences through more inflammatory material. Media consolidation furthers this trend. The report also found, however, that locally controlled programming is more responsive to community needs.

Congress has traditionally recognized the need to foster localism in communications. At a time when studies show that less than 0.5% of programming on commercial television is local public affairs, PEG centers serve the people in your home town, city, and district.

The November 3 Staff draft bill, however, would directly and substantially threaten the future of PEG programming throughout the nation. My testimony focuses only on the draft bill's provisions that would most directly impact PEG funding and capacity. There are other provisions in the draft bill that the Alliance and its members find troubling and we support the testimony of Councilmember Praisner on behalf of local government organizations on those issues.

I. PEG PROGRAMMING—THE LAST REDOUBT OF LOCALISM.

The federal Cable Act authorizes local franchising authorities to require cable operators to set aside capacity on their systems for PEG use,[1] and to require cable operators to provide, over and above the 5% cable franchise fee, funds for PEG capital equipment and facilities.[2] The amount of PEG capacity that is set aside on a particular system, as well as the level of funding provided by the cable operator, is locally determined, based on each community's determination of its own particular cable-related community needs and interests.[3]

The PEG provisions of the Cable Act are intended to provide all members of a community with access to the medium of television. Indeed, PEG is the only way that average citizens and community groups have assured access to communicate to their community via television. Particularly in this era of mass media consolidation, PEG access ensures that locally-produced programming, of interest to and tailored to the particular local needs of the community, has an outlet on television.

PEG access has served that purpose exceedingly well. Among other things, PEG provides:

[1] 47 U.S.C. § 531.
[2] 47 U.S.C. § 542(g)(2)(C).
[3] *See,* 47 U.S.C. §§546(a)(4)(B) and 546(c)(1)(d).

- The only **nmediated coverage Congress Members** receive in the home district. A number of members of Congress use Public Access channels to communicate directly with their constituents.
- **Church Outreach**—Religious programming represents 20-40% of programming at most Public Access centers. For the shut-in and infirm, this is often the only means by which they can participate in local services.
- **Coverage of local cultural activities,** particularly in smaller communities that do not receive commercial media attention. Examples include coverage of local historical, art and music events.
- The ability to maintain the **local cultural identities of our towns, cities and counties.** Examples include coverage of local high school football games, local parades and other civic events.
- **Local Governmental Programming**—Coverage of city/town/county council meetings, and local police, fire, and public safety programming.
- **Local Education Programming**—Cablecast of public school and local college educational programming.
- **Technical training and jobs.** PEG operations employ more people of color in management and technical positions than in all commercial media industries combined. PEG centers also provide vocational training in television camera and production work for local high school and college students.
- **News for military families**—Army Newswatch is the most-syndicated program on PEG channels, with carriage on over 300 PEG channels nationwide.

Let me provide you with some specific examples:

The Kalamazoo Community Access Center ("CAC") has provided PEG access programming for 25 years. CAC operates 5 PEG channels providing 2,100 programming hours per month. For 16 years, CAC has provided "live" multicamera coverage of the annual United States Tennis Association's Boys 16 and 18 Championships from the campus of Kalamazoo College. The coverage is dawntodusk for 11 days, and requires hundred of volunteer hours in challenging weather conditions. This coverage is made possible by the availability and use of a fiber institutional network that links the Kalamazoo College campus and the CAC master control facility. CAC volunteer Dave Williams helped produce the "Banned Books ReadOut" program that featured a selection of wellknown local personalities reading selections from a number of popular books, including Ray Bradbury's *Fahrenheit 451,* Maya Angelou's *I Know Why The Caged Bird Sings,* and Mark Twain's classic *Huckleberry Finn.* The program was made possible with the cooperation of the ACLU—SW Michigan Chapter and the Kalamazoo Public Library.

At the Community Television Network in Ann Arbor, Michigan, the public access center created a program in partnership with National Kidney Foundation focused on the risks of kidney disease among African American men and women. African Americans are seven times more likely to get kidney disease compared to white Americans. The award winning program has been cablecast on PEG channels throughout the state of Michigan.

In Illinois, a fledgling statewide public affairs network called *The Illinois Channel* originates in part out of Rep Shimkus' District, bringing C-SPAN type of coverage of state government to nearly 1.3 million Illinois cable homes. The entire distribution network of *The Illinois Channel* is due to the existence of PEG channels.

During the 2004 election season, Chicago Access Network Television ("CAN TV") ran 160 hours of local election coverage, including information on candidates for presidential, senatorial, congressional, and local judicial elections, as well as in-depth interviews by *The Illinois Channel* with state district candidates. CAN TV devotes its resources to local programming with an annual budget that wouldn't buy a single thirtysecond commercial during the Super Bowl. Those modest resources are put at risk by this legislation. In an earlier article on CAN TV's election coverage, the *Chicago Tribune* reported that, "Chicago's five access channels bring no small measure of serious politics, especially involving those large shut out heretofore from mainstream commercial media, including blacks, Hispanics, and, of course, Republicans." (We *are* talking about Chicago.)

Media Bridges in Cincinnati and Hamilton County, Ohio, cablecasts more than 15,000 hours of local programming produced by and for greater Cincinnatians by organizations like the Contemporary Arts Center, the Lifecenter Organ Donor Network and Literacy Network of Greater Cincinnati and more than 80 area religious organizations. According to a 2003 study, the 96 cents per subscriber per month in PEG access support that provides the majority of Media Bridges' financial support is multiplied almost seven times to provide an economic impact in greater Cincinnati of more than $5.3 million per year. This draft bill would eliminate that support.

In New Jersey, PEG stations are working with county governments to incorporate emergency public notification via the over 150 stations throughout the state. The system will allow communication from any emergency command location or mobile disaster unit to the communities effected via any specific town PEG station, a group of stations covering a specific area, or all the stations covering an entire county. This system will have the ability to interrupt programming instantly with text notices that include health hazard notifications, aid station locations, and evacuation instructions. The notices can also be removed and/or updated as needed with the same efficiency. This system will provide a vital and much needed service that will fill the communications gap that local governments need keep the public informed and safe in the event of any emergencies from a local level crisis to supporting national disaster organizations through the use of PEG stations. This capability will be lost under the draft bill as a result of the reduced PEG funding and the orphaning of institutional networks systems.

Community Television of Knoxville, Tennessee (CTV), has served the residents of Knoxville and Knox County for 30 years. For only $24 per year, the typical volunteer community producer at CTV receives training and unlimited use of PEG equipment (including cameras, studios, and editing equipment) to produce and air their own television programs. There is no other means by which community residents can find such an inexpensive way to effectively reach 110,000 community households with information pertaining to local issues, local resources and matters of interest to them, from support for victims of Alzheimer's disease and their families, to foster care, law enforcement, and youth recreation.

Every week, Cambridge (Massachusetts) Community Television produces 50.5 hours of live programs on its BeLive set—shows that include *Crime Time,* produced by the Public Information Officer of the Cambridge Police Department, *Bed Time Stories, Muslims Inside and Out, Local Heroes,* and two smoking programs, one against, and one for smokers' rights. Even though Cambridge is a city of over 100,000 residents, it is in the shadow of the Boston media market, and the commercial television stations and daily newspapers consequently do not cover the local elections. As a result, Cambridge Community Television's election programming is the only place that residents can tune in to learn more about local candidates.

In southern Oregon, Rogue Valley TV is the PEG access organization for four cities and three counties. Since 1999, the Medford Police Department has produced monthly the Medford Police Department's *Rules of the Road,* a one-hour live call-in program primarily on traffic and pedestrian laws. The police average 30 phone calls per show as Medford residents jam phone lines waiting to talk with their local police officers. Without use of institutional network fiber and equipment purchased with PEG funds, the program would never reach homes in Medford, Eagle Point and Jackson County, and the phones would be silent.

Albuquerque, New Mexico's Sandia Prep School just sent 30 students through *Quote . . . Unquote's* public access television orientation as this top academic school begins its third year of "Speak Out." Students produce the program and provide all technical work on the series that features high school debates, dance and music performances, including the orchestra. The student producer from an earlier year used his experience to win a scholarship to a top college. Sandia students are dependent on equipment purchased from a separate cable franchise PEG capital fund; their program is sent to subscribers through the cable system's fiber optic institutional network. *Quote . . . Unquote* training, facilitation and programming staff are funded from cable television franchise fees, which would be substantially reduced by this legislation.

II. THE NOVEMBER 3 STAFF DRAFT WOULD SUBSTANTIALLY REDUCE, AND ULTIMATELY ELIMINATE, FUNDING FOR PEG ACCESS.

PEG access is only possible if there are adequate funds to support it. The overwhelming majority of PEG funding comes from two sources: (1) monetary and inkind support for PEG capital facilities and equipment from the cable operator over and above the 5% cable franchise fee that is required by the local franchise agreement; and (2) contribution by the local franchising authority of a portion of the 5% cable franchise fee to PEG.

In Kalamazoo, for example, PEG funding comes from both of those sources: the Access Center receives 35 cents/month/subscriber for PEG support and, in addition, the communities contribute 40% of their franchise fees to the Access Center. In Cincinnati and Hamilton County, Ohio, the Access Center receives 96 cents/subscriber/month in PEG support from the cable operator as required by the local franchise agreement.

The November 3 House Staff draft bill, however, would eliminate one of those sources of funds to support PEG, and substantially reduce the other.

A. The Loss of PEG Capital Support Obligations.

Unlike the Cable Act, which allows local franchising authorities to require a cable operator to provide PEG access capital facilities and equipment funding over and above the 5% franchise fee, the draft bill would exempt broadband video service providers from such an obligation.[4] Moreover, the draft bill's PEG provisions place no obligation on, or ability to require, broadband video service providers to fund PEG access production facilities and equipment.[5] The result is clear: Unlike incumbent cable operators, broadband video service providers under the draft bill cannot be required to provide the local community with any monetary support for PEG beyond the 5% franchise fee. That would also mean that, over time, the incumbent cable operator would no longer provide such PEG support, as it would no doubt refuse to continue to incur a cost from which its broadband video service provider competition has been immunized. Alternatively, the incumbent cable operator would eventually transform itself into a broadband video service provider, thereby freeing itself directly from its PEG support obligations.

B. A Reduced Franchise Fee Revenue Base Would Reduce Local Franchising Authority Financial Support for PEG.

The draft bill, unlike the Cable Act,[6] restricts the "gross revenue" base for the 5% franchise fee to revenue "collected from subscribers."[7] As a result, non-subscriber revenues, from sources such as advertising and home shopping channels, would be excluded from the franchise fee revenue base under the draft bill. That would represent anywhere from a 10% to 15% reduction in the franchise fees that local governments currently receive under the Cable Act. And non-subscriber revenues—especially advertising revenues—are one of the fastest growing revenue streams in the current cable franchise fee revenue base. In those communities, like Kalamazoo and many others elsewhere, where the local government contributes a portion of its franchise fee revenues to fund PEG access operations, the reduced franchise fees caused by the draft bill would result in a substantial reduction in the funds that PEG access centers currently receive from cable franchise fees.

The combined elimination of PEG grants and the substantial reduction of franchise fee revenue available for PEG use that would occur under the draft bill would result in a funding reduction for PEG access that would be nothing short of catastrophic for many, if not most, PEG access centers across the nation.

III. THE NOVEMBER 3 STAFF DRAFT WOULD LIMIT PEG CAPACITY TO CURRENT LEVELS, THEREBY DEPRIVING COMMUNITIES OF THE ABILITY TO TAILOR PEG CAPACITY TO CHANGING, AND OFTEN GROWING, COMMUNITY NEEDS.

Under the Cable Act, the number of channels set aside for PEG use is determined individually by each local community based on its particular PEG needs and interests. Perhaps more importantly for the discussion here, the current Cable Act allows local communities, through the cable franchise renewal process, to reassess their PEG needs periodically, and to increase the channel capacity set aside for PEG where demand warrants.

As you might expect, the number of PEG channels set aside varies widely from community to community. This is precisely the sort of local self-determination and flexibility that one would expect—and that should be cherished—if the localism that PEG programming embodies is to survive. The draft bill, however, would short-circuit this process. It would essentially cap PEG access capacity at current levels.[8] That would mean that local communities would be locked into current PEG capacity

[4] *Compare* 47 U.S.C. § 542(g)(2)(C) *with* Draft Bill, § 2(a)(9) (PEG access grants not excluded from "franchise fee" definition).

[5] *See* Draft Bill, § 304(b).

[6] 47 U.S.C. § 542(b).

[7] Draft Bill, § 303(d)(3).

[8] Draft Bill, § 304(b)(1)(A). It might be argued that § 304(b)(1)(A) allows for PEG capacity growth, since it requires the broadband video service provider to provide PEG capacity comparable to the incumbent cable operator, and the incumbent operator's PEG capacity obligations might be increased in subsequent cable franchise renewal proceedings. But that would not likely occur if the draft bill became law because: (1) the incumbent cable operator would probably no longer be willing to agree to increase PEG capacity without an effective franchise process assurance that the broadband video service provider has to match that increase; and (2) the incumbent operator would, over time, likely become a broadband video service provider itself and thus become immune from the Cable Act renewal process.

limits—limits that were often set years ago when the incumbent cable operator's franchise was last renewed.

But there is no reason to suppose that PEG capacity needs are static. In fact, those needs typically grow over time, as the local community's interest in PEG programming grows, and the volume of PEG programming grows.

The draft bill's effective ceiling on PEG access capacity would have a particularly harsh effect on communities with older franchise agreements, many of which may currently have relatively few channels set aside for PEG. The draft bill would deprive these communities of the ability to increase PEG access capacity and thus forever sentence them to inadequate PEG capacity to meet their future needs.

CONCLUSION

Across the nation, PEG access centers put television in the hands of the people, not as passive consumers, but as speakers and information providers. As Chairman Upton observed back in 1999:

> "The Community Access Center provides a diverse programming schedule that can't be found anywhere else, reflecting a cross-section of society and offering an empowering media voice to those who may otherwise not have a chance to be heard."

In its current form, the draft legislation threatens to silence these voices because it would undermine the continued financial viability of all PEG centers nationwide. We therefore ask that the draft be revised to ensure the continued viability of PEG access, the only truly genuine form of localism and diversity in the television medium. The Alliance looks forward to working with you in making the necessary changes to the legislation.

Thank you for the opportunity to speak to you today, and I would be happy to answer any questions you may have.

Mr. UPTON. You bet. Thank you. Thank you for being here. Mr. Kimmelman, welcome back.

STATEMENT OF GENE KIMMELMAN

Mr. KIMMELMAN. Thank you, Mr. Chairman, members of the subcommittee. On behalf of Consumers Union, the print and online publisher of Consumer Reports, we once again thank you for inviting us to discuss the staff draft.

I would urge you to think about this legislative process as you go forward with an eye toward what is going on in the marketplace and what consumers are experiencing. We have a cable company in most communities; we have a telephone company in most communities; and we have the hope for more players coming in. And you will note that just last week, one of the major new consolidated players that reduced the number of cell phone providers we have, Sprint-Nextel, which was going to be a new broadband third choice for consumers, decided to cut a 20-year contract with 4 major cable companies to offer its broadband services in conjunction with one of the two dominant players. What we see happening over and over again is that it is the two dominant players, the Telco and the cable company, who still reign supreme. And something is particularly wrong in the marketplace when, on order to get voice over the Internet competitively, you have to go SBC or Verizon and you have to buy their DSL service and their voice service, whether switched or VoIP, before you can pick a competitor. And something is also wrong in the marketplace when in order to get a high-speed Internet service over cable, you have to go to the cable company and use its high-speed service to pick another—if you can even pick another. And something is really wrong in the marketplace with the explosion of all the video programming out there when the consumer can't pick the channels he or she wants to get, has to take the package of channels offered by the cable company, or the sat-

ellite company, or the telephone company. Can't eliminate payment for channels the consumer finds distasteful and inappropriate because it is bundled by the dominant video provider.

Now, the staff draft does a number of important positive things, but unfortunately it doesn't address these critical problems, and may create significant new problems just like these for the Internet by putting too much power in the hands of broadband video providers, whether they be a former cable company or former telephone company, to control what consumers get, how they get it, what applications, how they are packaged, what you pay for them, with inadequate public enforcement mechanisms.

Now, clearly on the positive side of here, what you have done is enormously important in allowing communities to build their own broadband open networks. This addition to the marketplace would bring, we hope, expanded choices, greater diversity, and opportunities for minority-owned and controlled content, if cities choose to take advantage of it. And clearly it is critical that you are opening the door and speeding up the process for video competition from telephone companies. That clearly will benefit consumers if you address this problem of how programming is packaged. That requires further intervention, unfortunately, than what the staff draft currently proposes.

But in opening the door to video competitions, so critical for consumers who see cable rates continue to go up almost 3 times the rate of inflation, as Mr. Ellis pointed out, it is absolutely essential to make sure that the wonderful open attributes of the Internet are not closed off at the same time. And, unfortunately, some critical definitions, some critical matters where there are discrimination issues and issues of how services are offered, are not adequately defined in the draft, and are left to private negotiation rather than public obligation. We are concerned that you are effectively eliminating reasonable prices, terms and conditions, provisions from Title I and Title II of the Communications Act.

And, finally, I would like to point out that when it comes to Federalizing consumer protections, I urge you to think about this really carefully. Imagine what happens when a consumer complains about a service they never requested, which you have covered under your consumer protection provisions. They complain about—do you really want them to have to go to the FCC to have to rely on an agency that I don't believe anyone on this committee has ever thought does its job very effectively, efficiently and certainly not in a timely fashion? Is that a meaningful way of resolving a complaint about something you didn't request? And then even worse, what if your bill is inaccurate or you think your bill is inaccurate? I am sure you have got many constituents who feel this way quite often. Under the staff draft, not only can they not go to their State regulators or local officials, but the FCC isn't even empowered to look at that issue. I think——

Mr. UPTON. Just to interrupt you. I will stop. I think we have written this so that they can go to the PUCs to do that, to enforce the Law.

Mr. KIMMELMAN. The moment the company says we disagree with that, it is back at the FCC. There is nothing you can do. But

on a bill that is inaccurate, it is not even covered by the provision. I mean, I would just hope——

Mr. UPTON. You can clarify that.

Mr. KIMMELMAN. Okay. I would hope you would want to because as much as it is important to streamline the process here of new entry and new players, it is absolutely critical for consumers to have a place to go that is convenient and that will deal in a timely fashion with their concerns.

In conclusion, Mr. Chairman, we think that there is much work that needs to be done on this legislation, but there are important issues that you are addressing. And we hope that you will continue to work with all outside players to try to craft legislation that both brings competition, brings us more video players, more choices in the marketplace, but does not undercut critical principles of Internet access. Thank you.

[The prepared statement of Gene Kimmelman follows:]

PREPARED STATEMENT OF GENE KIMMELMAN, SENIOR DIRECTOR OF PUBLIC POLICY AND ADVOCACY, CONSUMERS UNION

Consumers Union [1] and Consumer Federation of America [2] appreciate the opportunity to testify on the broadband policy discussion draft. We are grateful to Chairman Barton and members of this Subcommittee for their leadership on these important consumer issues.

For decades, consumers have suffered under monopolistic cable pricing that has resulted in skyrocketing cable bills and fewer consumer choices. And despite the promise of more competition in wireless and wire line phone services, consumers have seen more consolidation and fewer marketplace choices. But the advent of broadband now offers tremendous opportunity to inject new and potentially vigorous competition into the telecommunications marketplace that has become increasingly concentrated over the past decade.

We welcome the Committee's interest in fostering greater consumer choice by allowing communities to offer affordable broadband services to their residents. The draft provision prohibiting preemption of municipal broadband services helps ensure that communities do not face additional roadblocks to affordable broadband access for their residents.

If communities build open broadband systems, consumers will no longer be held hostage to the dominant phone or cable provider—they should be able to get video, voice and Internet services from many sources. Broadband, whether offered by the municipality or other provider, can break the anticompetitive spiral by loosening the stranglehold that dominant telephone and cable monopolies have enjoyed for decades. But in order for that opportunity to be realized, broadband policies must facilitate the entrance of *new or alternative* market players that offer voice, video and data services widely available from cable, telephone companies or any other delivery system.

However, given the enormous consolidation in wire line and wireless communications services, this draft fails to deliver the policies necessary to ensure that consumers will receive meaningful growth in price competition in what has become the most important telecommunications service—broadband connectivity. The draft's failure to confront the last mile bottlenecks created by the dominant providers' ex-

[1] Consumers Union is a nonprofit membership organization chartered in 1936 under the laws of the state of New York to Provide consumers with information, education and counsel about good, services, health and personal finance, and to initiate and cooperate with individual and group efforts to maintain and enhance the quality of life for consumers. Consumers Union's income is solely derived from the sale of *Consumer Reports,* its other publications and from noncommercial contributions, grants and fees. In addition to reports on Consumers Union's own product testing, *Consumer Reports* with more than 5 million paid circulation, regularly, carries articles on health, product safety, marketplace economics and legislative, judicial and regulatory actions which affect consumer welfare. Consumers Union's publications carry no advertising and receive no commercial support.

[2] The Consumer Federation of America is the nation's largest consumer advocacy group, composed of over 280 state and local affiliates representing consumer, senior, citizen, low-income, labor, farm, public power an cooperative organizations, with more than 50 million individual members.

isting control over competition may in fact foreclose opportunities for future meaningful competition in broadband.

Worse, the draft takes a step in the opposite direction, relieving incumbent monopolists of key obligations while giving them unprecedented ability to restrain broadband competition, and therefore phone and video competition, offered by new market entrants. Technological change must not result in the abandonment of fundamental values embraced over 70 years of telecommunications policy—values like nondiscrimination, participation in decision making, and protection of both new market players and consumers from abuse.

This draft hands over unprecedented power to broadband providers to discriminate among potential competitors and prevent their own customers from freely accessing content on the Internet and to use applications and devices of their choice. As it purports to promote competition in voice, video and data services, it virtually ensures that the two dominant incumbents will compete at most with each other while squeezing out third party competitors. It preempts the ability of localities to require new video entrants to build out their services to all consumers without imposing any national requirements for true competition. It federalizes all decisions on consumer protection while unfairly limiting the types of standards the Federal Communications Commission is authorized to establish. It precludes enforcement of even those limited standards by the states and gives consumers the unsatisfactory remedy of a drawn-out federal complaint resolution process. Consumers will be left with no where to turn and no remedy for relief.

In short, the American consumer is being asked to give up a great deal in exchange for another promise of competition at some distant point in the future. Consumers have had their pockets picked too many times to be fooled again. Twenty years of broken promises make us skeptical that the sacrifices being asked of the public by this discussion draft will ever be offset by competitively driven reductions in prices or improvements in service quality. History tells a different story: one of increasing concentration, skyrocketing cable bills, and bigger bundles of expensive services forced on consumers by both the cable and telephone industries.

Our specific comments on the draft follow:

NONDISCRIMINATION & NETWORK NEUTRALITY

The promise of broadband is its ability not only to provide consumers with unlimited access to diverse sources of information and online services, but also to offer competitive alternatives to dominant telephone and video services providers through voice and video over Internet. But that competition will be stifled if broadband Internet transmission service providers are allowed to effectively block consumer access to both content and competitive services that use the provider's service. Unfortunately, the discussion draft, in its current form, does not prevent that.

Section 104 codifies the principle that broadband providers should operate their networks in a neutral manner but simultaneously provides extensive exceptions, inviting network operators to discriminate against content, applications or devices that they do not own or control. The draft opens a wide door to discrimination.

The draft bill allows broadband Internet transmission service (BITS) providers to discriminate against content, devices and applications they do not own so long as they can justify such discrimination under the guise of network management. This loophole is expanded for broadband video services that integrate Internet capabilities or those who provide enhanced service quality by declaring that they "may not unreasonably" impair, interfere, restrict or limit applications or services, but offers no standard for what is "unreasonable" and contemplates no rulemaking to do so. There is a significant danger that "reasonable" discrimination may be nothing more than a desire to maximize revenue by blocking competition. Processes to resolve discrimination complaints allow BITS providers to block content or restrict use of devices and applications as complaints are resolved. This foot-dragging strategy is the model that the industry used to strangle head-to-head competition in the past decade.

Giving network operators the power to dictate services opens the door to the "cablization" of the Internet. Cable and telephone company giants are encouraged by this bill to bundle more services together in take-it-or-leave-it packages and to make it harder, not easier, for competing communications service providers and Internet applications developers or service providers to reach the public. Both cable and local telephone industries have a long history of using their market power to stifle competition and undermine consumer choice. In the past decade, the cable in-

dustry has inflated monthly cable bills by more than 60 percent[3] and forced consumers to pay twice for Internet service if they want an Internet service provider other than the cable owned entity. The result has been thousands of Internet service providers out of business.

Telephone companies have followed a similar path with respect to local competition. Dragging their feet on market opening, they made it virtually impossible for competing local exchange carriers to get into the market. Once the Bells were let back into long distance, they slammed the door on competition and bought up much of what remained of the competitive local exchange carrier industry. At the same time, they have tied their high-speed Internet service (DSL) to voice, much like the cable operators tied Internet service to their high-speed communications. This duopoly dribbles out bandwidth increasingly in bundles that are unaffordable for most Americans. As a result, over the past half decade, America has fallen from third to sixteenth in penetration of high speed Internet access[4] and what we call high speed is vastly slower than what the rest of the world does.

Giving the duopoly more power to control the consumer and undermine competition will not solve the problem, it will make it worse and it will have the added cost of further undermining innovation in broadband services. Learning a lesson from the cable operators, who have been free to close their network for years, the CEO of SBC, the nation's largest telephone company, has already declared his intention to use the new-found freedom to discriminate against and charge fees of Internet applications and service providers.[5] By imposing limits on download speeds and declaring certain applications unacceptable, the cable operators sent a strong signal that they would control the services that flowed through the cable wires. Innovators abandoned the space and innovation moved abroad. With the telephone companies now poised to pursue the same anticompetitive, anti-innovation strategy, a long shadow has been cast over the Internet applications market in America.

The importance of ensuring nondiscrimination in Internet access and traffic cannot be underestimated. It's important to understand that the Internet only grew and thrived because of two mandates of openness. First, the Internet protocols were developed as open protocols under government direction. The agencies that operated the Internet required the interconnecting networks to adopt and abide by these open protocols. Second, the underlying transmission medium, the telephone network, was required by law and rule to be operated in a nondiscriminatory manner under sections 201 and 202 of the 1934 Communications Act[6], which make it unlawful for a provider to impose unjust and unreasonable rates, terms and conditions on other providers. This draft bill effectively repeals those provisions by making them inapplicable to BITS and BITS providers and yet provides the Commission with no authority to promulgate rules or standards for non-discrimination on networks. Moreover, the minimal interconnection obligations for BITS and BITS providers included in the bill are not even subject to a standard that requires interconnection based on a public interest standard. Instead, interconnection agreements are left solely to the discretion of the dominant network provider and the unaffiliated provider seeking interconnection, with no standards for what they must include and what is prohibited.

Strong, enforceable nondiscrimination provisions are essential to continued growth and competition in not just broadband service, but also for continued innovation in Internet content, services, and applications. The draft bill not only fails to provide standards for what impairment, interference or blocking is considered "unreasonable," it provides no meaningful remedy for those unaffiliated providers whose applications, services or content is restricted by a BITS provider. And it places the burden of proving that interference is "unreasonable" squarely upon those whose rights are violated—businesses with far less power than the dominant incumbent and consumers, who are entirely powerless under the bill's complaint procedure.

Though the draft gives the Federal Communications Commission the authority to order continuation of service while a discrimination complaint is being resolved, the

---

[3] Bureau of Labor Statistics, Consumer Price Index (November 2005). From 1996 until September 2005, CPI increased 28.7% while cable prices rose 63.8%, 2.3 times faster than inflation.

[4] Organization for Economic Co-operation and Development (OECD), OECD Broadband Statistics, December 2004. Available at http://www.oecd.org/document/60/0,2340,en_2649_34225_2496764_1_1_1_1,00.html ; International Telecommunications Union, Broadband Statistics, April 13, 2005. Available at http://www.itu.int/osg/spu/newslog/ITUs+New+Broadband+Statistics+For+1+January+2005.aspx

[5] "At SBC, It's All About 'Scale and Scope,'" *Business Week,* November 7, 2005, http://www.businessweek.com/magazine/content/05—45/b3958092.htm

[6] 47 U.S.C. §§201-202.

authority is discretionary. More likely, the dominant incumbent will block the applications, content or device provider during the months-long complaint investigation and resolution process, undermining the viability of the competitive business. Because of the history of network discrimination, the draft should place the burden of proving that blocking, impairment or interference content, services or applications is reasonable by requiring the BITS provider to bring a complaint to the Commission and mandate service continuation until permission to impair is provided. Until that case is effectively made, the services, content and applications should not be interfered with.

Additionally, considering that broadband networks will become the major means of communications in this country, the Committee should retain a strong public interest standard for interconnection agreements and authority for the Commission to mandate interconnection when it is in the public interest.

NATIONAL FRANCHISING

While we applaud the goal of expanding competition to cable monopolies, if Congress establishes a national franchise for competitive video services in order to foster more competition, it must also provide for strong, uniform, minimum national standards that meet the needs of communities. In particular, this must include provisions to meet community programming needs, ensure build-out and prevent redlining—all negotiating authorities previously provided to localities but effectively eliminated by the draft. If communities are forced to forfeit their rights to ensure fair treatment of and service to their residents, this bill must also establish adequate national standards in place of those local rights. Without these requirements, the promise of more competition will be just another empty one.

In the absence of explicit requirements that the Bell-entrants build out and make their services available to all consumers in a local franchise area, we fear competitive video services will come only to "high-value" consumers—those capable of paying for the full bundle of services that the Bells wish to offer. The favoring of upscale consumers to the exclusion of low-income, minority and ethnic groups in the provision of consumer services has long been a concern in the communications industry and is of growing concern in advanced telecommunications services given the importance of broadband access to functioning in today's society. The anti-redlining provision (Section 304(c)) is a symbolic step in the right direction to ensure that low-income communities—those most in need of price relief that broadband competition can bring—are not excluded by broadband video service providers.

Unfortunately, by providing sole enforcement power to the Commission and preempting local and state authorities in this area, we have strong concerns that the prohibition will be largely meaningless. The Commission will be charged with monitoring compliance in potentially thousands of communities, with no new resources dedicated to that enforcement and no adequate date on which to base its determinations. Moreover, the enforcement provision lacks specificity both as to how the Commission will monitor compliance by broadband video service providers and how quickly it will take action to remedy nonperformance by providers. We urge your consideration of shared or sequential monitoring and enforcement of anti-redlining provisions by the Commission, the states and localities. And it is unclear whether discrimination based on race, ethnicity or other exclusions based on a "lack of projected demand for service" would be allowed under the draft legislation.

However, even enforceable anti-redlining provisions may be incapable of ensuring service to low-income populations so long as the burden lies with authorities to prove that income is the sole reason that service has been withheld as provided for in the draft. The combination of the lack of build-out requirements for new video service providers, together with relatively weak anti-redlining enforcement and the absence of meaningful local franchise negotiating authority, will prevent communities from taking action to ensure that all of their residents enjoy the benefits of competition.

If legislation is to forfeit local franchising authority rights, it should also establish national mandatory minimum build-out requirements for new market entrants in the local franchise area in which they intend to provide service. If timely build-out is not required, then the Committee should require new entrants to provide financial resources to local communities or states for use in fostering alternative means of ensuring broadband competition and service to the entire community rather than to high-value customers alone. Those resources could be used to establish community broadband networks, competitive commercial services to areas underserved by the new entrant, or other means of assistance to help low-income consumers access advanced telecommunications services at affordable prices. Though Section 409 respects the rights of communities to build their own networks, it eliminates only one

barrier—preemption. It provides no resources to assure municipalities can establish these networks. This is particularly a problem for communities with large low-income populations.

APPLICATION OF VIDEO REGULATIONS TO BROADBAND VIDEO SERVICE PROVIDERS

Although the draft appears to apply current pro-competitive video rules (e.g. access to programming, ownership limits, must-carry) to new broadband video service providers, it opens the door to eliminating important statutory and regulatory protections within four years without a demonstration that such rules no longer serve the public interest. By allowing the few requirements Congress imposed on cable monopolies to promote competition—which enabled the satellite industry to grow and broadcasters to deliver quality local television programming—to expire without a thorough demonstration that all public benefits derived from these rules can clearly be attained through market forces, the draft would undermine some of the most important avenues for achieving diverse and competitive sources of television news and information. There is simply no reason to let the Commission eliminate these important pillars of public safety without Congress first initiating such modifications through targeted legislation.

CONSUMER PROTECTION

The bill's preemption of state regulation over BITS, VOIP, and broadband video services is a significant concern. States are frequently the first line of defense for consumers in resolving complaints about fraud, inadequate service, pricing and other anti-consumer behavior. Instead the bill requires the Commission to establish national consumer protection standards for these services. As unsettling as federal preemption of all state regulation or enforcement is, equally troubling is the omission in this most recent draft of several directives for Commission standards included in earlier iterations of this legislation. Omitted provisions include limitations on early termination fees, requirements for customer service standards and the maintenance of consumer complaint records. If the Commission is allowed to preempt state regulation and enforcement, it must be required to issue comprehensive standards that fully protect consumers rather than be limited to the minimal mandates in the bill.

In addition, because the draft allows telecommunications companies to redefine themselves as BITS, BITS providers, or broadband video service providers, they are able to skirt existing state and local consumer protection standards for traditional services.

By preempting states from developing their own consumer protection standards and then simultaneously preventing their final enforcement of national standards, the bill significantly weakens consumer protections. States will have only the ability to issue compliance orders when providers violate Commission standards. They can take no enforcement action of their own, raising serious concerns about the timeliness and resolution of consumer protection violations given Commission resources. And if a consumer complaint does not clearly fall under a national standard, consumers will be forced to wait for subsequent Commission action in order to resolve their problems.

Finally, the complaint process envisioned by the draft threatens to leave consumers, municipalities and states without resolution of concerns for many months as the Commission forwards the complaint to the offending party, awaits an answer, investigates the complaint and then mediates or arbitrates the issue. At a minimum, any legislation should provide states with the ability to enforce federal standards and allow states the flexibility to protect consumers against new forms of abuse while awaiting Commission action to formulate final rules.

RIGHTS OF MUNICIPALITIES TO PROVIDE BROADBAND NETWORKS

We offer our strong and unqualified support for Section 409, which prohibits state preemption of municipal broadband networks—a critical component of any legislative package that seeks to increase consumer access to advanced telecommunications services. The provision is essential to any legislation that seeks to foster competition in data, video and voice services, and expand affordable high-speed Internet access to all Americans.

Hundreds of communities have responded to the lack of affordable broadband access by creating their own networks through public-private partnerships, offering new opportunities for entrepreneurs. Community broadband networks offer an important option for communities in which broadband services reach only certain areas or are offered at prices out of reach for many consumers. Equally important, the

mere possibility that a community may develop a broadband network helps discipline the marketplace.

Efforts to prohibit these community networks stifle competition across a range of telecommunications services, stall local economic development efforts, and foreclose new educational opportunities. Section 409 of the draft ensures that communities that want to foster broadband access are not precluded from doing so.

SUMMARY

We applaud the Committee's efforts to modernize regulation to foster broadband competition, technological innovation and adoption of high-speed Internet. Unfortunately, the approach of this draft heads in exactly the opposite direction: it will hamper competition, stifle innovation, and do little to promote ubiquitous affordable access to advanced services. We look forward to working with you to address these issues as the Committee continues its work.

Mr. UPTON. Thank you. Mr. Wiginton?

STATEMENT OF JOEL K. WIGINTON

Mr. WIGINTON. Thank you, Chairman Upton, for inviting us to testify. My name is Joel Wiginton. I am Vice President and Senior Counsel at Sony Electronics for Government Affairs. It is about almost 6 hours after this hearing started, so rather than read my testimony verbatim, I will just give you the 5 top highlights of my testimony. We are a leading consumer electronics manufacturer, including the manufacture of televisions, from soup to nuts, in Pennsylvania, and personal computers in San Diego. There are five main points.

My first is that our industry, and consumers in general, will substantially benefit from a truly competitive video service market. In particular, we are encouraged by the competition potentially offered by new entrants such as the ILECs, and we want to applaud the committee for your efforts to realize this competition.

Second, and perhaps the most important for our industry and consumer electronics consumers, is that we need to truly realize right of attachment as envisioned by Section 629 of the Telecommunications Act. We were pleased that the draft bill extends the principles of 629 to broadband video service providers, but what we really need is an explicit right to attach. Absent an explicit right, there will be little competition for consumer electronics devices that attach to the networks, and consumers will have little choices as well because service providers can use their monopoly power over that network to control the devices that attach to that network, and how consumers can use those devices.

Consumer choice will suffer for three main reasons. One, there will be little competition for consumer prices for devices that attach to the network. Two, there will be little competition for features and functions for devices that attach to the network. And, three, there will be little innovation and little incentive for consumer electronics device manufacturers to create new consumer-friendly products that attach to the network.

Our third point, we are quite pleased that the draft bill applies the net neutrality principles to the broadband Internet access services. We want to point out though that if these principles are violated, we want to ensure that there is meaningful enforcement of these principles by the Federal Communications Commission.

Fourth, we do have some concerns with the mandatory 4-year sunset review provision of the bill. As Mr. Stearns said in his open-

ing statement, what we want to do with this bill is create regulatory certainty. And while this provision will ensure employment for myself—lawyers and lobbyists like myself in perpetuity—it really does do the exact opposite for people in my industry. It creates a systemic intolerable uncertainty for the consumer electronic industry.

And, finally, while we very much support the spirit of the bill and its attempt to create meaningful access for persons with disabilities to broadband services, we do have some concerns with the precise language of the bill. That said, we think that a compromise is easily obtainable, and we want to work with the committee and members of the disability community to create a provision that effectively creates access for persons with disability.

Thank you very much, and we look forward to any questions.

[The prepared statement of Joel K. Wiginton follows:]

PREPARED STATEMENT OF JOEL K. WIGINTON, VICE PRESIDENT AND SENIOR COUNSEL, SONY ELECTRONICS INC

INTRODUCTION

Chairman Upton and Ranking Member Markey, my name is Joel Wiginton, and I am Vice President and Senior Counsel for Government Affairs at Sony Electronics Inc. We are a leading manufacturer of consumer electronics devices, including televisions, DVD players, and personal computers. My company appreciates the opportunity to express its views on the staff discussion draft creating a statutory framework for Internet protocol and broadband services.

Over the past several years, consumers nationwide have benefited from a revolution in consumer technology—a revolution that has allowed for an ever-increasing array of products to interconnect and access the power of IP-enabled services through the Internet. Consumers enjoy "on-demand" access to all types of content using a vast array of consumer electronics devices. This revolution has fueled the U.S. economy and helped to maintain our country's leadership in innovation and entrepreneurship.

Policymakers have long recognized the value of unfettered access to communication services. FCC regulation in the 1970s and 1980s fostered the growth of the Internet by prohibiting telephone companies from preventing the offering of "enhanced services" and allowing consumers to attach their own devices to the network. Further, Congress recognized the importance of consumer choice when it enacted, in 1992, Section 624A of the Communications Act mandating compatibility between consumer electronics and cable television systems and, in 1996, Section 629 mandating the commercial availability of navigation devices connecting to multichannel video programming systems.

PROMOTING MARKET-BASED COMPETITION AND PRESERVING THE MARKETPLACE FOR EDGE TECHNOLOGIES

As an industry, we are excited about the potential for new, competing broadband services, including new video programming services. We believe that these new services should be able to flourish and not be saddled with burdensome and inappropriate legacy regulations. At the same, we believe that the success of broadband services depends on preserving the existing paradigm between consumer electronics manufacturers, service providers, network operators, content developers, and the government. This paradigm includes a commitment to open and unfettered consumer access to content, services and applications, and protecting consumers' ability to connect devices of their choice.

High-speed broadband networks offer a platform for innovation that will thrive if application developers, device manufacturers, and network providers are free to differentiate their offerings and invest in new technologies without restrictions imposed by other industry players. We believe, therefore, that innovation will flourish only if device manufacturers have certainty that their products will be able to connect to IP networks and broadband services.

If this freedom is not preserved in the broadband world, then network service providers will be able to dictate CE product design and functionality and to favor equipment of their own design and making over equipment provided by unaffiliated par-

ties in the competitive marketplace. Using proprietary standards and restrictive licensing terms, service providers will be able to control the consumer experience, determining what devices consumers can use and how they use them. If service providers exercise this ability, the retail marketplace for "edge network" technologies like TiVo and portable video players, and the incentive to create new technologies, will no longer exist.

Although we are hopeful that detailed regulations will not be as necessary with respect to emerging technologies as has been the case in the past (for example, with cable television), we believe that it is essential for Congress to direct and empower the FCC to ensure that consumer devices that can attach to broadband services will become commercially available. Consumers ultimately will benefit from the resulting array of choices available to them.

ENFORCEMENT MECHANISMS FOR "NET NEUTRALITY" PRINCIPLES SHOULD BE INCLUDED IN THE LEGISLATION.

We also would like to express our continued support for applying "net neutrality" principles to broadband Internet access services. Section 104 in the draft bill applies these principles to such services. However, we believe that to ensure adherence to these principles, swift and appropriate action must be taken if they are violated. Additionally, we hope that service providers do not take unjust advantage of the exemptions in Section 104 to avoid complying with the principles.

ENSURING THE COMMERCIAL AVAILABILITY OF DEVICES THAT ATTACH TO BROADBAND VIDEO SERVICES

As discussed in the introduction, in 1996 Congress recognized the importance of consumer choice when it enacted Section 629 mandating the commercial availability of navigation devices connecting to multichannel video programming systems. We are pleased that the current draft bill directs the Federal Communications Commission to develop comparable regulations to apply to broadband video services providers.

As the Commission develops these regulations, we believe that it is vital for such regulations to include an explicit "right to attach" competitive devices. The language set forth in Section 624A and Section 629 does not include a clear right to attach. We ask, therefore, that the FCC be directed to include in its regulations an explicit right to attach commercially available devices to broadband video services so long as they do not harm the network or enable theft of service.

Further, licenses for these technologies that allow the attachment of devices to broadband video services should not impose unrelated or unnecessary burdens on licensees, such as prohibiting designing the same device to attach to a separate broadband Internet service if the consumer has subscribed to such a separate service. We respectfully request the addition of amendatory language prohibiting broadband video service providers from imposing such limitations in their licenses.

In addition, to ensure that the current "two-way plug and play" negotiations among cable providers and CE manufacturers are not stalled or undermined, we ask that language be added to the bill stating that until the Commission enacts new regulations, the current regulations implementing Sections 624A and 629 for cable operators shall continue to apply to covered multichannel video providers (cable) even after they qualify to be treated as broadband video service providers.

ACCESS TO PERSONS WITH DISABILITIES

The consumer electronics industry supports the goal of ensuring that persons with disabilities have access to products that attach to broadband services. However, we believe that the current draft bill, instead of working toward that goal, will work against it.

The draft bill widens the scope of existing accessibility laws by including any and all devices used to access broadband Internet, voice and video service. It also creates a new undue burden standard that would require every manufacturer, on a case by case and potentially a product by product basis, to prove an undue burden. The uncertainty, compliance, and potential litigation costs would greatly impact manufacturers' ability to develop new, innovative devices that attach to broadband services.

Current telecommunications law (Section 255) stipulates that manufacturers must provide products that are "accessible to and useable by persons with disabilities, where readily achievable." The "readily achievable" standard is defined as "easily accomplishable and able to be carried out without much difficulty or expense." The current committee draft legislation defines an "undue burden" as meaning "significant difficulty or expense." Thus, although the factors used to evaluate whether a

feature or function is "readily achievable" or an "undue burden" are similar, the analysis could result in a radically different level of obligation for manufacturers.

This difference could be critical for the ability of manufacturers to provide products with a variety of different features and functions that meet the needs of different markets. Under current law, manufacturers of telecommunications consumer products have been able to provide products with bare-bones capabilities at low cost and other products with enhanced capabilities at a fair market price. CEA is concerned that the change to an "undue burden" standard would result in a regulatory environment that would require every product be equipped with any feature that a single high-end product might be able to employ. The unfortunate result would be that manufacturers could become fearful to innovate in accessibility features, and hold back innovations that would otherwise have benefited consumers with disabilities.

We are committed to working on compromise legislative language that would address the needs of the disability community, while not unreasonably impacting manufacturers and harming the overall economy.

CONCLUSION

Sony, and indeed CE manufacturers generally, support bringing true competition to the market for video services as soon as possible. We particularly support the efforts of new facilities-based entrants like the ILECs. Marketplace competition for video services will bring consumers lower prices and allow manufacturers to develop new and innovative products for consumers to access these services.

Again, thank you for the opportunity to address the Committee on these important matters. We look forward to continued cooperation with the Committee and other interested parties.

Mr. UPTON. Thank you very much. Mr. Wilson?

STATEMENT OF DELBERT WILSON

Mr. WILSON. Good afternoon, and thank you for inviting me to testify before you today. I am the general manager of Industry Telephone Company, which is headquartered in Industry, Texas. Our service area encompasses 226 square miles. We have three telephone exchanges providing service to approximately 2,352 access lines. That is a density of only 10.3 subscribers per square mile. In addition to local service, Industry Telephone Company also provides Internet and inter-exchange services. Through its extensive infrastructure investment, Industry Telephone Company is a key driver to the local economy and rural development throughout its service area.

Americans today uniformly rely on communications infrastructure and services to satisfy their commerce, security and entertainment. Moving forward, these needs will be met via a combination of two-way voice, video and data options. Consequently, deploying advanced infrastructure that is fully capable of offering such services should become the hallmark of our national communications policy. Unfortunately, as currently crafted, we are not convinced the draft legislation that is the subject of today's hearing would effectively establish such a foundation. Rather than setting a stage that would yield a ubiquitous broadband capable network the President and so many others of us seek, we fear the structural approach to this draft emphasizes regulatory silos that are not fully in sync with the convergence taking place in the industry. But more importantly, we particularly fear the approach could ultimately undermine the Nation's long-standing commitment to universal service. Without a strong commitment to this policy and the mechanisms necessary to carry it out, it is possible the dramatic vision this draft hopes to evoke may never materialize.

A recent example of the importance of maintaining a strong universal service policy is demonstrated by the recent experience of ATCA member Cameron Communications in Sulphur, Louisiana. All 11 of Cameron's exchanges were devastated by Hurricane Rita. In the aftermath of that disaster, Cameron's challenges are significant, yet thanks to the Universal Service support, they are not insurmountable. While Universal Service support helped to build a pre-hurricane Cameron system, it has taken on an even more important role in the post-devastation period. With nearly all of its business and residential revenue base temporarily walked-out, the Universal Service support it receives is sustaining the system during this time of extreme need. By the way, Cameron is home to the Nation's Strategic Petroleum Reserve, which is of grave importance to all Americans.

We are particularly concerned that the draft unnecessarily ignores that the communications industry is converging into an industry where carriers will be offering bundled voice, video and data services. What is needed is a broad definition of communications services that is not technology specific. A regulatory regime is necessary that regulates like services in a like manner regardless of the technology used. This regime must account for the high-cost networks and protect the integrity of the infrastructure that all of these providers equally rely upon to offer their services. This is the only way to preclude the sort of arbitrage that has already been allowed to occur under today's regulatory classification scheme, and that would surely continue on the approach envisioned by this draft.

We are also concerned with the draft's interconnection provisions. While some of the earlier draft's more troubling aspects in this regard have been eliminated, we continue to believe more clarity is called for. The rural industry has always been in a difficult position when it comes to negotiating such matters, because, frankly, there is little incentive for others to come to the bargaining table with a small rural carrier.

In addition, if the regulatory silo approach of the draft is preserved, we believe the interconnection and the reciprocal compensation arrangements discussed above should be clarified to apply to all titles of the Act. If regulatory equity among industry segments is truly the committee's objective, then this is a must.

The draft in question today is complex and requires careful review. We intend to continue our scrutiny of its details, and we will certainly be happy to provide the committee with additional viewpoints as they emerge. In the meantime, it is important that the committee is fully aware of the rural sector's thoughts regarding any rewrite of our communications statutes. These details are outlined in my written statement.

In terms of a broader rewrite of the Communications Act, we would implore the committee to remain cognizant of these specific areas that are so critical to rural carriers and the consumers they serve. If you are able to do that, you will have successfully ensured the creation of an environment that will sustain the Nation's commitment to ensuring all Americans with access to comparable, affordable communications services now and in the future. Thank you, Mr. Chairman.

[The prepared statement of Delbert Wilson follows:]

PREPARED STATEMENT OF DELBERT WILSON, GENERAL MANAGER, INDUSTRY TELEPHONE COMPANY ON BEHALF OF INDUSTRY TELEPHONE COMPANY AND NATIONAL TELECOMMUNICATIONS COOPERATIVE ASSOCIATION

Good morning! ITC is a company headquartered in industry, texas. Our service area encompasses 226 square miles. ITC has 3 telephone exchanges providing service to approximately 2,352 access lines. That is a density of only 10.3 subscribers per square mile. In addition to local service itc also provides internet and interexchange services. Through its extensive infrastructure investments, itc is a key driver of the local economy and rural development throughout its service area.

ITC is representative of the nation's rural incumbent local exchange carriers. The good things we stand for and do make rural communities a better place in which to live and work. And make no mistake about it, our efforts contribuite directly to making the nation as a whole stronger and more secure. That is why I am honored to be appearing today on behalf of the hundreds of similarly situated rural carriers represented by the national telecommunications cooperative association—and more importantly, on behalf of their several thousand employees and several million subscribers.

Throughout the debate surrounding the communications act rewrite, the initiative's most ardent advocates have repeatedly cited deregulation and competition as the keys to maintaining america's communications preeminence. Their theme revolves around the ideas that: "absolute competition and deregulation are always in the public interest; the communications era can only evolve to the next level with a hands-off policymaking aprroach; and the universal service oriented foundations of our past must be abandoned in favor of preferential treatment for specific emerging technologies and concepts."

The nation's rural carriers do not agree with this premise. The flaw with all these theories is that neither alone nor in tandem will any of them produce the results their advocates so desperately seek. In fact they will not even be capable of maintaining the status quo. And in the aftermath of recent natural disasters as well as the subversive threats our nation faces today, these communications can mean the difference between life and death.

How many of you are aware of the critical role rural communications systems play in the aftermath of these types of events? As we speak, one such NTCA member continues its scramble to rebuild its system in the aftermath of huricanes Katrina and Rita that hit the Louisianna and Texas coasts. Cameron communnications in Sulpher, Louisianna, represents a critical economic and security link in Sulphur, in Cameron Parish, in Louisanna, and yes even in the United States.

Cameron's service territory covers the states largest parish from a geographic perspective but perhaps it's smallest from a demographic perspective. Thankfully for all Americans, Cameron, like all NTCA members, views their mission as one based in the moral obligation of placing service ahead of profits. This is a particularly critical point considering the challenges Cameron faces today. This small rural system has been tasked with bringing communications service to the nation's strategic petroleum reserve which is located within its territory. In addition, there are major liquified natural gas facilities and a host of other petroleum related businesses in Cameron's territory that are relying on them to provide crucial services. If that were not enough, Cameron is also responsible for providing services to the National Guard, the Federal Emergency Management Agency, the Red Cross and other releif organizations currently operating in the area.

Cameron's challenges are significant. Yet thanks to universal service support, they are not insurmountable. While universal service support helped to build the pre-hurricane cameron system, it has taken on an even more important role in the post-devestation period. With nearly all its business and residential revenue base temporarily wiped out, the universal service support it receives is sustaining this system during this time of extreme need.

But that is just one example of rural carriers being prepared, as well as responding to natonal needs in the aftermath of significant events. How many of you are aware that it was a small rural system in the central plains that the Federal Government turned to for help in the immediate aftermath of the events of September 11, 2001. As efforts were launched to position the Vice President in a secure location, NTCA member venture communications, based in Highmore South Dakota was called to help with the effort. Again, because they were prepared, they were able to quickly establish secure communications in a remote location that the security intersts of that time mandated. And again, they were largely able to do this due to our national commitment to universal service.

My point is there are more critical policy footings than competition and deregulation that must remain in place to ensure the existence of a robust nationwide ubiquitous communications network—a network capable of supporting advanced services and responding to our nation's economic and security needs. Full cost recovery, fair access and interconnection are critical to a strong and useful communications foundation. Without them, there will be no network, be it wireline, wireless, or some other medium, to provide consumers with access to IP-enabled or broadband oriented services.

With regard to cost recovery, there are primarily two issues to keep in mind—universal service, and intercarrier compensation. These are not industry regulations as so many would like us to believe. They are industry responsibilities. In general, the industry as a whole believes that the way in which funds are collected and distributed for universal service and intercarrier compensation must be changed to ensure our network continues to thrive. The solutions for both are fairly simple ones.

For universal service, we must refrain from ever linking its support mechanisms to general revenues, as its current industry funded approach is well proven. In additon, the base of contributors should be expanded and its distribution should be cost based to ensure accountability and credibility. This is contrary to the current rules where competitive providers receive suport based on the incumbents costs, regardless of their true cost of service.

With regard to intercarrier compensation if any service provider uses another provider's network that service provider must compensate the other provider for the use of their facilities—at an appropriate rate. This notion is not complex; it is simply ensuring that all players stand up to their responsibilities of having the opportunity to partake in our capitalistic marketplace.

Many call intercarrier compensation or access charges an implicit subsidy. I call it a legitimate operating cost for a telecommunications provider. We have invested tens of millions of dollars to serve rural communities. If a carrier would rather come and build their own network instead of using ours for a nominal fee, they are welcome to do so. As an internet provider myself, I compensate the owner of the Internet backbone that I must utilize to offer internet services to my customers. I view this as a legitimate cost for providing internet services to our customers. I recognize and accept that without use of their network I could not provide these services for my customers. I am therefore fortunate that the network resources are available to help me in providing my customers with the full array of advanced services that are available today.

Tell me, why should a new service provider be able to access this network for free? Much of this debate seems to be focused on whether new IP-enabled service providers should pay access charges. To those of us that toiled to finance the deployment of infrastructure the question is: why should they not? I understand that we don't want to bog down new entrants with unnecessary regulations, but allowing them to skirt industry responsibilities is simply wrong. If a new provider's business plan can't accommodate playing by the rules and upholding industry responsibilities, then they probably shouldn't be playing. After the 1996 Telecom Act, we saw a large influx of new telecom entrants. Unfortunately, many did not have sound business plans and were soon out of business or in bankruptcy thus, hampering investment in the telecommunications industry as a whole. We don't want to recreate the boom/bust scenario of that period by artificially incentivizing unsound businesses that cannot operate without benefitting from regulatory arbitrage.

Americans today uniformly rely on communications infrastructure and services to satisfy their commerce, safety, security, entertainment, and leisure needs. Moving forward, these needs will be met via a combination of 2-way voice, video, and data options. Consequently, deploying advanced infrastructure that is fully capable of offering such services should become the hallmark of our national communications policy.

Unfortunatley, as currently crafted, we are not convinced the draft legislation that is the subject of today's hearing would effectively establish such a foundation. Rather than setting a stage that would yield the ubiquitous broadband capable network the president and so many others of us seek, we fear the structural approach of this draft emphasizes regulatory silos that are not fully in sync with the convergence taking place in the industry. But more importantly, we particularly fear this structural approach, whether by design or accident, could ultimately undermine the nation's long-standing commitment to universal service. Without a strong commitment to this policy, and the mechanisms necessary to carry it out, it is possible the dramatic vision this draft hopes to evoke, may never materialize.

We are particularly concerned that the creation of three new regulatory classifications for communications infrastructure as suggested in this draft unnecessarily ignores that the communications industry is converging into an industry where car-

riers will offer voice, video and data. What is important is the one pipe that carriers will offer their services over, not what technology is utilized. What is needed is a broad definition of communications services that includes all services, regardless of the technology used to deliver the service or the regulatory classification of the service that are capable of supporting 2-way voice communications, data, video and any new advanced services used to communicate. A regulatory regime is necessary that regulates like services in a like manner regardless of technology used. This regime must account for high cost networks and protect the integrity of the infrastructure that all of these providers equally rely upon to offer their services. This is the only way to preclude the sort of arbitrage that has already been allowed to occur under today's regulatory classification scheme and that would surely continue under the approach envisioned by this draft.

Our overriding concern with the structural approach of the bill notwithstanding, the drafters have identified and attempted to address several areas that are of specific concern to the rural sector of the industry. Yet we fear many of these may require additional clarification as well. For example, while its reference to interconnection duties in sections 103 and 203 are appropriate, and the drafters have deleted some of the troubling provisions from the earlier draft, we continue to believe more clarity is called for to ensure they truly accomplish what is necessary from a rural provider perspective. The rural industry has always been in a difficult position when it comes to negotiating such matters because frankly there is little incentive for others to come to the bargaining table with a small rural carrier. The degree to which matters such as this can be given more clarity will benefit all rural americans.

In addition, if the regulatory silo approach of the draft is preserved we believe the interconnection, and reciprocal compensation arrangements discussed above should be clarified to apply to all titles of the act. If regulatory equity among industry segments is truly the committee's objective then this is a must. The draft in question today is complex and requires careful review. We intend to continue our scrutiny of its details and will certainly be happy to provide the committee with additional viewpoints as they emerge. In the meantime, it is important that the committee is fully aware of the rural sector's thoughts regarding any rewrite of our communications statutes.

Earlier I had alluded to the fact that in our mind any rewrite initiative must ensure the ability of carriers to fully recover costs and to have fair access and interconnection capabilities. Indeed, moving into this debate we put forth the following specific concepts that we believe must govern the construction of communications policy for the future which is based on the following general principles:

Regulatory approach—

- Must be approached from a flexible perspective. Placing all carriers on an equal regulatory footing is an admirable goal yet one that does not equate total deregulation.
- The rural sector has, and will, necessarily continue to rely upon the preservation of a certain level of regulation that is inclusive of industry responsibilities that all must live up to.
- Typically, a federal/state partnership works best to meet the needs of rural consumers.

Universal service—

- General issues:
- The universal service fund must continue to be an industry funded mechanism, and neither supported through general tax revenues nor subjected to the federal anti-deficiency act.
- Contribution issues:
- The base of contributors must be expanded to include all providers utilizing the underlying infrastructure, including but not limited to all providers of 2-way communications regardless of technology used.
- Support shall be made available for the cost recovery needs of carriers deploying broadband capable infrastructure.
- The contribution methodology must be assessed on all revenues or a revenues hybrid that ensures equitable and nondiscriminatory participation.
- The regulatory authority to modify the scope of contribution obligations as technology evolves must be clarified and strengthened.
- Distribution issues:
- Support must be used to construct, support, and maintain networks to benefit all consumers and must not be voucher, auction, or block grant based.
- Support must be based upon a provider's actual cost of service.

- Support must not be used to artificially incite competition.
- The rural and non-rural fund distinctions must be maintained.
- Rules must be streamlined to encourage acquisitions of adjacent underserved exchanges.

Intercarrier compensation—

- Carriers must be compensated for all traffic utilizing their networks.
- Carriers must identify their traffic to discourage arbitrage and phantom traffic. Identifying information must be passed along by all intermediate carriers.
- Appropriate transitional time frames are necessary to ensure continued access to quality/affordable communication services in rural areas.

Network access/interconnection—

- All providers must continue to have the obligation to allow other providers to interconnect with their networks.
- Default rates, terms, and conditions for access to and use of network facilities must be maintained as technology evolves.
- Rural providers must have realistic access to spectrum.

Video content—

- Providers must have non-discriminatory access to video content at reasonable and non-discriminatory rates, terms, and conditions regardless of distribution technology used.
- Non-disclosure, tying, and exclusive programming agreements regarding rates must be prohibited.
- Predatory pricing by large incumbent cable operators must be prohibited.

In terms of a broader rewrite of the communications act, we would implore the committee to remain cognizant of these specific areas that are so critical to rural carriers and the consumers they serve. If you are able to do that you will have successfully ensured the creation of an environment that will sustain the nation's commitment to ensuring all Americans with access to comparable affordable communications services now and in the future. Thank you.

Mr. UPTON. Well, I want to thank all of you for staying this long. I hope you didn't line have sitters this morning. I saw some early this morning when I came in at 7. And I do want to just note for the record that—and in spite of not having a lot of members now—remember we started very early this morning—we have had 28 members on both sides of the aisle participate, which is not quite a record, but it shows the interest, obviously, of this legislation, and I don't think anyone quite figured that it would last this long with the number of votes that we had today. And I would just make a motion that all members of the subcommittee have a couple days to submit questions in writing that you might be able to respond. We will keep the record open to include that, if it happens.

I have a couple of questions before I yield to either one of my Democratic colleagues or the Vice Chairman of the subcommittee Mr. Bass. I want to start, I guess, first of all with Mr. Bowe. Again, we appreciate your participation today. I have two questions. I will ask them both and then let you respond. One, in your testimony, you state that home access to the Internet has just passed 50 percent. How many people with disabilities would you estimate that are currently unable to access and use the Internet today due to the accessibility issue? That is No. 1. My second question is the bill—this draft would require manufacturers and service providers to make broadband equipment and services accessible to people with disabilities unless doing so would cause an undue burden. In your opinion, how will the change from today's readily achievable standard to the undue burden standard impact the lives of people with disabilities?

Mr. BOWE. Thank you, Mr. Chairman. To take them in order, first, the proportion of Americans with disabilities who are not able to access the Internet because of accessibility issues specifically—we don't have a particular number. I can give you some guesses, but——

Mr. UPTON. Okay.

Mr. BOWE. [continuing] I can't give you a specific number. I would guess something in the order of 20 to 30 percent, and the reason I say that is that is a—issue specific to different—or different web sites. Most web sites and most places that you go to on the web are not accessible for people with learning disabilities and people who are blind. The vast majority do not comply with standards for accessibility. That being so, your bill does not get into regulating that, so I don't want to go too far with the 20-percent number. There are others who is having to do with affordability and having to do with the availability of the basic equipment. Those issues are beyond the question that you asked me. But if you ask about public school children with disabilities, those nearly 100 percent of them gain access every school day

because they do it from school. Once you help people leaving in school and living in adulthood, give affordability so that would reduce your number. Okay.

And your other question on me, undue hardship defense of manufacturers. First of all, the 1996 Act, as you well know, required that excessive parody—was readily achievable, but we are now in—of any effort with the manufacturers of hardware and software and the providers have services have been asked to make access accessible if they can do it, and if they can't, to please explain why they can't. I think by now they certainly have experience—9 years of experience with us. Now, but I also want to make the point that today's technologies, from the cell phones that we use, to PDAs, even to desktops, we are not talking about machines that have a shelf-life in months, maybe up to a year. And also we have things that are very, very heavy in software that if I want to put a new version of a cell phone or a new version of a PDA, what I do is just plug in some new card. Now with all of these cases, you can make something accessible, much easier, much faster and much cheaper than you could in 1995 and 1996. For all—undue burden standard is not a—difficult standard for them to meet. I don't think it would have any reasonable impact on them at all.

Mr. UPTON. Okay. Thank you. I know my time is expired. Mr. Bass has waited. I have some other questions, but I will yield to Mr. Bass for 5 minutes.

Mr. BASS. Thank you. I thank the Chairman, and I think I am only going to ask one question, a general question, so you can continue. Mr. Wilson, you dealt more than—I don't have a specific question for you. You dealt more than anybody else, I believe, in the issue of rural services and how this bill would affect that, and I am reviewing your testimony now. I am wondering whether there are any aspects of this staff draft, any additions that we might be able to make, any leverage points, or incentives, or thoughts or anything that we might employ that would maximize the deployment of advanced services to rural communities like the 179 or 180 or so that I represent in New Hampshire?

Mr. WILSON. Well, sir, I think—speaking on behalf of rural companies—I think, you know, we are very interested in going forward with advanced networks to offer all these new services to our customers. I think the main thing we need going forward is a stable environment of—you know, things are still uncertain and it is very difficult to make investments because we don't know what is going to happen. Everything is just a flux these days. We need—stability and a strong Universal Service policy, something we can count on before—and where we can make investments and recover those costs, we as rural carriers will build those networks to deliver those advanced services to the rural consumers across this country. In many cases, we are already well under way doing that.

Mr. BASS. Does anybody else have any comments on it or not? Then, finally, Mr. Wilson, the—I am reading your summary. The provision allowing for new government networks to compete with existing carriers has always been a concern to the rural industry and is inconsistent with their position in that regard. You are not referring to Section 409 the government authority to provide services, is that what you are referring to, or something else?

Mr. WILSON. I am totally not sure of exactly what Section.

Mr. BASS. Okay.

Mr. WILSON. But, no, sir, we do not agree with government competing with us in networks. I just don't believe our tax dollars be used against us that way than providing dollars——

Mr. BASS. If we weren't involved, would you have a problem with it?

Mr. WILSON. Well——

Mr. BASS. If the municipalities had—if there was no provision—if a small community, for one reason or another, they couldn't get the kind of services that larger communities could get and the community itself decided to undertake the challenge of providing broadband high-speed services itself, and they charged their customers for that. It wasn't—they didn't use money that they were collecting for the recycling center or for plowing roads and so forth, would there be a problem with that?

Mr. WILSON. In most cases that I am aware of in rural communities, our rural carriers are very attentive to their customer base and delivering services such as you are talking about here. I just think that we should always be careful in opening the door to allow government municipalities, or state, or whatever, to be in competition with us, you know. After——

Mr. BASS. Do you think a rural community that is advised by whatever providers that exist that they just don't want to do it because it's not cost effective, that those citizens should be denied the ability to look for alternatives that might include a municipal plan?

Mr. WILSON. I couldn't—I would have to agree with you there, that just because they are rural citizens, they should not be denied the access to such things if the

provider fails to provide that service. I think you would have to be very specific in the case where the carrier of the—the local exchange carrier has failed to do so or refuses to do so, but I think in—again, in the cases I know of in the rural areas, I don't know of a case where a municipality already served by a rural company that the rural companies have not been attaining to meet their customers' needs, because we are very—you know, they are our neighbors, our friends, we live with them, and we hear from them regularly and we try to do our best to serve them. That is what we are all about is service to our customers.

Mr. BASS. Any other comments?

Mr. KIMMELMAN. Mr. Bass, I think that what we are finding is there are a lot of communities in which people do not have access to adequate broadband service, prices are high, or in some cases services isn't even available. One of the most admirable portions of this bill, I believe, is allowing communities to step in. And, as you heard this morning from EarthLink, they are paying for building a network in Philadelphia. They are building out—it is on their own nickel, and they are offering services as low as $10 a month for broadband access—wireless access. I would love to see private enterprise do that, but where they won't, it certainly is enormously helpful to have the community band together and do it itself.

Mr. BASS. Thank you, Mr. Kimmelman. I yield back.

Mr. UPTON. Mr. Markey?

Mr. MARKEY. Thank you, sir. Thank you, Mr. Chairman. I apologize. Mr. Kimmelman, is there a concern from a consumers standpoint that the net neutrality right, the freedom to access all Internet content, or the ability to get higher bandwidth may still be available but simply for an extra fee or a higher price, how do you suggest that we address that very real consumer concern?

Mr. KIMMELMAN. Well, first off, Mr. Markey, I think it is very important that if you look at the structure of the staff draft, that a lot of traditional terms of communications policy from Title I and Title II may no longer exist on the way it is written. We don't know what reasonable and unreasonable is under this draft. By the way, certain parts of the Communications Act appear to have been wiped out. But even if they are what they traditionally have been, it is left to private negotiations to work this our. And one major concern we have is that broadband providers start doing what cable companies have traditionally done, which is to say that you can have certain channels, but you have to buy these other channels to get it. You can have Internet access, but you have to buy our Internet access before you can buy something else. Pay me once, pay me twice, pay me three times. Now that may not be absolute blocking of applications and services, but it certainly is unfair and inflating prices for consumers.

Mr. MARKEY. In the previous draft, we had a provision which prohibited a broadband video service provider from requiring a financial interest in a program service as a condition for carriage. The new draft deletes the prohibition. Do you think that that is a good policy decision?

Mr. KIMMELMAN. I think it is quite dangerous, Mr. Markey. You will recall in the 1992 Cable Act, Congress put in such a provision related to cable because of previous abuses in the cable industry where channels could not be carried, they would not be carried, by the dominant cable companies unless the dominant company was allowed to own an equity stake in it. I think it was a wise choice to do then with cable, and it would be wise to do with any broadband provider that has a dominance over its platform.

Mr. MARKEY. Mr. Barton asked the first panel if they preferred the first draft—bipartisan draft or the second draft—the one that we are talking about right now. Which of the two drafts did each of you prefer? Let us go down the list, the first draft or the second draft, if you had to pick one of the two?

Mr. BOWE. I will pick option number 3.

Mr. MARKEY. No, no, no. No, I know.

Mr. BOWE. Because——

Mr. MARKEY. I understand.

Mr. BOWE. [continuing] with respect are identical——

Mr. MARKEY. I understand what you are saying. I know where you are going. Mr. Clark, first draft or second draft?

Mr. CLARK. Oh, gosh. I mean, neither one meets the standards of——

Mr. MARKEY. I understand that.

Mr. CLARK. [continuing] the framework——

Mr. MARKEY. Which one heads further in the right direction?

Mr. CLARK. I will go with two.

Mr. MARKEY. No. 1, Mr. Haasch?

Mr. HAASCH. No. 1.

Mr. MARKEY. Mr. Kimmelman?

Mr. KIMMELMAN. No. 1.
Mr. MARKEY. No. 1.
Mr. WIGINTON. No. 1.
Mr. MARKEY. No. 1.
Mr. WILSON. I would have to abstain because we don't like neither of them.
Mr. MARKEY. Well, but you know what, my mother once said to me, Eddie, people aren't going to compare you to the Almighty, only to the alternative. Okay. And that is how life is going to be. Okay? And that is how it is for you, Mr. Wilson, right now. No. 1 or No. 2?
Mr. WILSON. If we are able to have more input in the process——
Mr. MARKEY. Yes.
Mr. WILSON. [continuing] and get some of the concerns that we have addressed?
Mr. MARKEY. Yes.
Mr. WILSON. Probably No. 2——
Mr. MARKEY. Okay.
Mr. WILSON. [continuing] if we are going to work with you.
Mr. MARKEY. Okay. Thank you. That is very helpful to me. So the issues here now that I would like to move on to are the PEG access issues. The corporations rely on fees from franchise fees to fund operations over the length of the agreement. What concerns do you have, Mr. Haasch, if a franchisee qualifies for a national franchise prior to the expiration of a franchise agreement? What effect on your—will this have on your revenue expectations?
Mr. HAASCH. Well, clearly, that is if the bill goes forward with the modified gross revenue definition for a new entrant in the market. If the incumbent transitions to that new model, they also would be subject to the revised gross revenue definition, and therefore in essence reducing the compensation amount coming to the local government. That is the primary concern. I need to step back and also point out that under existing law, there is compensation from a cable operator that funds a PEG access operation above and beyond franchise fees. To us, to the Alliance, that is one of the glaring financial considerations in this bill.
Mr. MARKEY. Okay. Mr. Clark, I just want to do a quick recapitulation of the vote. Did you really intend on voting for the No. 2 and not the No. 1?
Mr. CLARK. Let me explain that. The—Congressman Markey, our Association—from an Association standpoint, the one thing that probably is preferable in one to two is that there are some more interstate interconnection nexus at that point and the State Commissions have more interconnection rights under the first one. From a personal standpoint, the reason that I picked two is because I think two does—and, again, this is not an Association view, but if I had to pick one or the other, I think two does a little bit more, perhaps, to allow for the tearing down of barriers to entry on the video side, and from a personal standpoint, the reason that I place a high value on that is I really believe that in the future Telecom market, video is going to drive a tremendous——
Mr. MARKEY. And I appreciate——
Mr. CLARK. [continuing] amount of—so that is the reason for that.
Mr. MARKEY. And you think that would be the—are you a Democrat or a Republican, by the way?
Mr. CLARK. I am a Republican.
Mr. MARKEY. A Republican? Okay. That is helpful also to know. And you might be moving up, because I don't think you really do represent all of NARUC, Mr. Clark——
Mr. CLARK. Yes.
Mr. MARKEY. [continuing] although I appreciate the fact that you are expressing your personal view here, I sincerely doubt that that is NARUC's position. So my view here—Mr. Bowe, you want to stick with number 3?
Mr. BOWE. I would just like to add, from the disability point of view, we are in legal limbo. We are in a world of technology with no accessibility protection whatsoever. What we need, we need legislation. We need bipartisan cooperation.
Mr. MARKEY. I am with you.
Mr. BOWE. We need you to write a law and send it to the President. That is what we need.
Mr. MARKEY. I wrote the close captioning language in the 1990, you know, bill dealing with new televisions. I wrote the language in——
Mr. BOWE. I saw you make that first step there.
Mr. MARKEY. [continuing] the Telecommunications Act. You know I agree with you and——
Mr. BOWE. Absolutely.
Mr. MARKEY. Okay. Thank you. Well, anyway, right now it is 6-4 in favor of the first draft over the first two panels, which is a good sign. And, Mr. Clark has a per-

sonal preference. I am not sure that NARUC is thrilled across the country with that position, but, nevertheless, we will—all right, we will let that sit. So, you know, here is what we have—and I appreciate, Mr. Chairman, that we are still—we are sitting here now pretty much alone, but I don't know—have you already asked your questions? I don't know——

Mr. UPTON. Mr. Bass is going to get one more question.

Mr. MARKEY. Okay. Great. Thank you. The one thing, just so I can, you know, lay this out—the one thing that I am most interested in is ensuring that we don't have a repetition of what happened back in 1996. Mr. Ellis, on the first panel, began by criticizing the regulations that were put on the books pursuant to the 1996 Act. Now, the Chief Counsel of SBC at the time, and all of regional companies, came into my office, and they begged us to pass the 1996 Act. And there was a good reason why, because they were tired of Judge Green's regulations, which were many more than 700 pages long over the preceding 15 years, and begged us to pass it.

Now, Mr. Ellis seems to be upset that there was a 14 point checklist in the bill that they endorsed, and that there were rulemakings for all 14 points that were mandated in the bill. And so what was disturbing to me, to be honest with you, was that after the bill passed, SBC then brought a law case calling the legislation a bill of attainder, trying to strike down the entire bill so that they would be free from the judicial constraints of Judge Green and then free from the restraints in Congress. Now, you can imagine how upset people who had spent the preceding 6 years of their lives negotiating with SBC, and negotiating with the other Bells, became. And so there has to be, as we are going forward, no terminal logical inexactitude in what it is, that the users and consumers of all these new services are entitled to by law. It cannot be left to vague language subject to subsequent interpretation that could delay indefinitely the actual benefits flowing to consumers.

But everyone should know this, that the 1996 Act was a complete success. 80 percent of all Americans now have broadband going past their front door. On the day that the bill passed, no homes in America had broadband. And this despite the fact that the Bells fought for the first 3 or 4 years any real progress on their front, but because it was happening from the CLECs and the cable companies and others, they had to join in. So now our chore is to make sure that the consumers derive the benefits from this interest which the cable—which the telephone companies now have, which I think is great. It doesn't help me when the Bells say that it will take them 40 years to deploy this service. From the moment in 1978 in this committee when we repealed the ban which the telephone companies had on the cable companies using their telephone poles, and we mandated that the telephone companies had to let the telephone companies had to let the cable companies use their telephone poles, it only took 10 years for the cable industry to wire 80 percent of America. The Bells sit here telling us it will take them 40 years for them to do that, 30 years later. Which, again, leaves observers wondering whether or not they—whether and how high their sincerity coefficient is.

And, by the way, the cable companies served every single customer in America, which the Bells say they can't do. They need 40 years to do something without promising that they are going to serve every consumer. So if we can get a definition, if we can get some guarantees with regard to what it is exactly that consumers are going to get, what protections competitors are going to get, then I think we all are willing to be open-minded as we were in that first staff draft. But it cannot be a world in which ambiguity, obfuscation, lack of definition, characterizes what it is that is the final product.

And so I thank you, Mr. Chairman, for this hearing. I think it has provided an enormous public service. Your witnesses were great and I hope that it is not our last hearing. I thank you, Mr. Chairman, very much.

Mr. UPTON. Thank you, Mr. Markey. I have one more question that I want to ask Mr. Haasch, and that is I want to get a better understanding of the 5-percent franchise fee as it relates to the PEG programming. From your experience from your testimony, you indicated that 40 percent of the contribution of the franchise fees for PEG in Kalamazoo—or comes to the facility in Kalamazoo, is that on the higher end, on average, or the lower end for a lot of communities?

Mr. HAASCH. It is tough to say. The community I came from, Ann Arbor, Michigan, over here——

Mr. UPTON. You can go like this. This is called the Big House.

Mr. HAASCH. The Big House?

Mr. UPTON. Yes.

Mr. HAASCH. 100 percent were dedicated to cable-related but——

Mr. UPTON. That is the question I wanted to come back to. How many communities actually contribute maybe 100 percent of that fee? Is that a majority? Is it 75 percent?

Mr. HAASCH. It certainly is not a majority, certainly not. I believe the Kalamazoo model, where a percentage anywhere in the 40- to 60-percent range that goes to the access, and the balance goes to the community's general fund. I believe that is the prevailing structure. Ann Arbor and the few other communities that I know of where 100 percent is dedicated to the cable programming, I believe they are the minority, although I do know that in talking with Ms. Praisner this afternoon, that community also dedicates 100 percent——

Mr. UPTON. Really?

Mr. HAASCH. [continuing] for their—yes.

Mr. UPTON. Well, would you say that you would prefer—do you think there would be general support that all of the monies of—that municipalities receive are dedicated to the PEG channels? Is that a good thing or a bad thing——

Mr. HAASCH. I know——

Mr. UPTON. [continuing] or percentage-wise, or where do you think it ought to be?

Mr. HAASCH. From the PEG community, certainly, although I had this conversation——

Mr. UPTON. What do you think is a reasonable request?

Mr. HAASCH. The concern is dictating to local government how they use that revenue. Revenue, although philosophically and conceptionally, I think a strong argument can be made that you are reinvesting in the system because you are creating local content, and I believe that is the hook of any discussion on that train.

Mr. UPTON. And I know that she is gone, but what do you think the cities would say, what level might they be able to support, would you guess, since you talked a little bit about her?

Mr. HAASCH. I hesitate to speculate, but in the even splits. If you are going to——

Mr. UPTON. 50? So you would say that 2.5 percent——

Mr. HAASCH. If you are going——

Mr. UPTON. [continuing] at least as a minimum——

Mr. HAASCH. [continuing] if you are going to——

Mr. UPTON. [continuing] to have to go to the PEG channels.

Mr. HAASCH. If you want to pursue that discussion with local government, I would suggest starting in that area. I—there would be a mixed bag of support.

Mr. UPTON. Okay. Well, it is 4:20. Mr. Clark and I are late for our 4:10 plane, so we will how he does. It might not be a lot of people flying to North Dakota today. I am not sure. But I want to—we appreciate all your testimony.

Mr. BASS. Can I ask one more question, Mr. Chairman?

Mr. UPTON. Yes. Mr. Bass.

Mr. BASS. And if it is not relevant to this panel, just don't answer it, but I am curious to know if anybody has any perspective on the one—for video, on the one—on the Federal franchise versus 50 franchises or State-wide franchise issues. Does anybody—the bill has a single franchise provision for video. Is there concern about that or are there alternatives? If nobody wants to respond to it, you can leave.

Mr. WILSON. From the rural companies point of view, that is a real issue for us.

Mr. BASS. Okay.

Mr. KIMMELMAN. I would just say, Mr. Bass, that we are agnostic. The communities, we think, have done a good job in a number of areas, but we also see there is not enough competition for video. We need to speed something up. So whether you create a scheme whereby it would be up to the States or you do it federally, what is important to us is there needs to be substantial local input in meeting community needs, whether it is Federalized or whether you delegate it back. But, we do believe it is critical that you look to speeding up competition for video.

Mr. HAASCH. I would reiterate Mr. Kimmelman's point about community needs, and from the Alliance's viewpoint, as long as PEG access and the development and funding and support for local content, Federal versus State model, from the Alliance's standpoint, is neutral.

Mr. BASS. Thank you, Mr. Chairman.

Mr. UPTON. Thank you all for being here. Hearing is adjourned.

[Whereupon, at 4:22 p.m., the subcommittee was adjourned.]

[Additional material submitted for the record follows:]

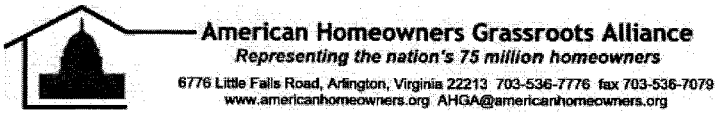

Testimony of the

American Homeowners Grassroots Alliance

Submitted to the

The House Energy and Commerce Telecommunications and the Internet Subcommittee

Hearing on

Legislation to Reform Telecommunications Laws

November 9, 2005

The American Homeowners Grassroots Alliance (AHGA) is a national consumer advocacy organization serving the nation's 75 million homeowners. AHGA engages in policy issues that significantly impact homeowners and home ownership. The Alliance thanks members of the House Energy and Commerce Telecommunications and the Internet Subcommittee, for considering legislation to overhaul the nation's telecommunications laws.

One area that is increasingly impacting homeowners and other consumers is the rapid increase in the cost of cable television services and decline in consumer satisfaction with those services. In the latter regard, cable companies ranked lower than the IRS on the University of Michigan's recently released American Customer Satisfaction Index.

As to costs ensconced cable companies have been increasing subscription fees at more than three times the rate of inflation in recent years, and 86% since 1995. Escalating costs have once again made the top three list of consumer complaints of cable industry, according to a recent FCC report.

These increases need not continue. Another FCC study found that the introduction of wireline competition immediately decreased cable prices by an average of 15%. While 15% is the average savings observed by the FCC, the actual future savings may be far more substantial when the cable TV industry perceives the new entrant as a true competitor. In Keller, Texas, new cable customers suddenly saw a 50% rate decrease for bundled services from their incumbent cable company when a new fiber-optic TV services provider entered the market. These bundled discounts can potentially save consumers hundreds of dollars a year.

Indeed, Energy and Commerce Committee Chairman Joe Barton was on target when he observed that "The Telecommunications Act of 1996 spurred the development of telephone competition, but no one could have foreseen the magnitude of the challenges and opportunities that the Internet age has presented. New services shouldn't be hamstrung by old thinking and outdated regulations... We need a fresh new approach that will encourage Internet providers to expand and improve broadband networks, spur growth in the technology sector and develop cutting-edge services for consumers." We also want to thank Ranking Member John Dingell, Subcommittee Chairman Fred Upton, Subcommittee Ranking Member Ed Markey and Committee Vice Chairman Chip Pickering for their recognition of the need to address this issue so their constituents can see more choices, better services, and lower prices.

AHGA strongly supports efforts to modernize our telecommunications laws to bring the benefits of competition to the cable television industry as quickly as possible. Homeowners need relief now, particularly in the face of rapidly rising energy costs this winter. While numerous municipal leaders are to be

commended for overcoming cable company lobbying pressures and approving franchises for new competitors, the cable companies will continue their efforts to thwart competition in the nearly 30,000 local markets. Anti-competition lobbying efforts by the cable industry combined with the number and diversity of franchise agreements currently required of new competitors have slowed the development of cable competition at a time when most homeowners are desperate for competition. This committee will provide a great service to consumers by creating a national television franchise to lower prices and provide consumers more choices.

To be sure the House Energy and Commerce Telecommunications and the Internet Subcommittee are facing many challenges in the process of passing telecommunications reform legislation in this Congress. However, these hearings are a strong first step toward addressing some of most controversial aspects of telecommunications reform. We urge members of this committee to work together to balance the rights and needs of consumers over the entire economic spectrum with the desirable objective of promoting competition between the many potential service providers. We are confident that with the continued leadership of this committee Congress will be able to work together to reform our telecommunications laws and bring the benefits of cable choice to all Americans.

STATEMENT FOR THE RECORD
SUBMITTED BY
EDISON ELECTRIC INSTITUTE
TO THE
HOUSE COMMITTEE ON ENERGY AND COMMERCE
SUBCOMMITTEE ON TELECOMMUNICATIONS AND THE INTERNET

HEARING ON
STAFF DISCUSSION DRAFT OF LEGISLATION TO CREATE A STATUTORY FRAMEWORK FOR INTERNET PROTOCOL AND BROADBAND SERVICES

NOVEMBER 9, 2005

The Edison Electric Institute (EEI) is pleased to submit this statement for the record to the Subcommittee. EEI is the premier trade association for U.S. shareholder-owned electric companies and serves international affiliates and industry associates worldwide. Our U.S. members serve 97 percent of the ultimate customers in the shareholder-owned segment of the industry and 71 percent of all electric utility ultimate customers in the nation.

EEI member companies share a common commitment to maintaining the safety, security, reliability, and structural integrity of the nation's critical electric infrastructure that is essential not only to the electric industry but also to the cable and communications industries that are attached to such infrastructure. That is why we have concerns with the "pole attachment" provisions (Section 407) of the November 3 Discussion Draft, which addresses the rates, terms and conditions for access by third parties to electric utility poles, ducts, conduits, and rights of way.

The nation's electric distribution infrastructure, consisting of poles, ducts, conduits, rights of way and related facilities, has been shared for nearly a century with various providers of telephone,

telegraph, cable television, traffic control and street lighting, police and fire communications, and other services. Such sharing began long before federal pole attachment regulation began in 1978. Responsibly sharing utility infrastructure avoids the wasteful duplication of facilities on public or private rights of way and reduces costs and other impacts on consumers.

Historically, poles and other infrastructure have been owned by both telephone and electric utilities and shared pursuant to joint use agreements between the parties. These joint use agreements were based upon parity, i.e. the equal sharing of the responsibility for infrastructure ownership. As a result, each company's financial obligation to the other was the same and virtually no money changed hands.

However, as federal policy over the last thirty years has made it more financially advantageous for telephone and other cable and communications companies to rent space rather than own poles, the proportion of jointly used poles that are owned by electric utilities has increased steadily. Today, electric utilities own 75% - 80% of the jointly used poles in most metropolitan areas, and that percentage continues to increase. The effect of this change in ownership has been to shift substantially the burden and risks associated with hosting communications facilities to electric utilities, and ultimately to their customers.

Beginning with the Pole Attachments Act in 1978, cable television gained access to electric and telephone infrastructure at regulated rental rates in an effort to promote the deployment of what was then a nascent service. The 1996 Telecommunications Act and subsequent regulation

expanded regulated access to this infrastructure to include entities providing telecommunications service.

The rapid development of new communications technologies and the massive increase in demand for communications services, coupled with the numerous competitive entrants seeking to deploy those technologies and provide such services, has dramatically increased the number, size and weight of the communications facilities attached to the critical infrastructure.

As demonstrated by widespread, destructive events such as Hurricanes Katrina and Rita and other natural disasters such as floods, earthquakes and ice storms, as well as more localized events such as automobile collisions with distribution poles, the additional physical burdens associated with multi-party use of critical wireline infrastructure can complicate or hamper reconstruction of utility infrastructure and service restoration, posing a serious threat to life, health and property.

The nation's electric utilities are fully capable of managing the shared use of their infrastructure to minimize these risks, but they cannot do so effectively in the current regulatory climate that overemphasizes near-term deployment of telecommunications services to the detriment of the long term safety, security, reliability, and integrity of the critical wireline infrastructure. For example, under present law and regulation, existing communications wires can be overlashed again and again with additional cables without an engineering evaluation of the ability of the poles to withstand the increased wind or ice loading and without any prior notice to the pole owner. When inventorying pole attachments, electric utilities routinely discover hundreds, if not

thousands, of attachments made to their poles without notice or authorization. These practices potentially create a public safety issue, because the resulting pole loads may not be in compliance with good utility practice or the National Electric Safety Code (NESC), which is the basic guideline on which most utility engineering standards are based.

Similarly, the costs associated with the shared infrastructure are disproportionately allocated to the infrastructure owner – increasingly the electric utility – and its customers, instead of being equitably shared by all the parties who benefit from the use of the infrastructure. Federal formulas for calculating the rent that is payable to infrastructure owners have made pole ownership such a financial disadvantage that the burden of maintaining a sound and reliable pole infrastructure is rapidly being abandoned by telephone utilities and falling to the electric utilities. Furthermore, the lack of a meaningful financial stake in the poles for attaching entities tends to lead to negligent or abusive attachment practices that threaten the long-term security, integrity and reliability of the infrastructure and potentially creates public safety issues.

As the threats to the structural integrity of this critical national resource grow, the electric industry believes that it is time to revise the current public policy regarding pole attachments. For example:

- The current federal approach to pole attachment regulation places primary authority with the Federal Communications Commission (FCC), which lacks expertise in evaluating the local safety and reliability impacts associated with pole attachments. The states, on the other hand, have regulated for over a hundred years the reliability of local electric

distribution systems, as well as telecom service issues, and therefore are uniquely situated and qualified to regulate pole attachments.

- The federal approach to pole attachment policy and regulation has focused on mandating access at rates far below actual costs, in order to promote the deployment of new technologies and foster competition. Unfortunately, that policy has undermined the safety, security, reliability and integrity of the critical wireline infrastructure upon which both electric and communications service depends.
- Federal pole attachment rental rates are currently based upon the nature of the traffic carried by the attached facilities (*i.e.*, either cable television or telecommunications), which is undisclosed to the infrastructure owner and irrelevant to the physical burden on the infrastructure.
- Communications interests are now attempting to exploit the system by seeking: (1) repeal of the rental rate established by the Telecommunications Act of 1996 to be paid when an attacher provides telecommunications service, (2) to substitute regulated rental rates even to traditional, pole-owning local exchange carriers in lieu of existing joint use agreements, and (3) to push all rental rates down to the lowest, most heavily subsidized rate originally created to support tiny start-up cable companies in the 1970's.
- Electric utilities also attach their equipment to telecommunications providers' poles and pay a negotiated rate for doing so. Providing a lower subsidized rate to telecommunications providers would not only abrogate these longstanding agreements, but would create a significant disparity in the rates that electric utilities are charged to attach to telecommunications poles versus what telecommunications providers are charged for their attachments to electric utility poles.

Instead of forcing electric utility customers to subsidize the likes of Time Warner, Comcast and the former Bell Companies, Congress should:

(1) Emphasize the protection of critical wireline infrastructure and public safety, and establish certain fundamental criteria for making or modifying attachments to critical infrastructure.

(2) Provide for an equitable sharing of the costs associated with the ownership of shared critical infrastructure among those who benefit from its use.

(3) Set minimum notification and other requirements for gaining access to critical infrastructure.

(4) Restore jurisdiction over the shared use of local critical infrastructure to the same state agencies that already regulate the safety, reliability and cost of local electric and communications utility distribution systems and protect electric and communications consumers.

(5) Explicitly provide a mechanism for states to fund regulation of such matters.

EEI and its member companies appreciate this opportunity to outline our concerns with the "pole attachment" provisions of the Discussion Draft. We look forward to working with the Members of the Subcommittee to resolve the issues we have raised.

American Public Communications Council, Inc.

Statement Willard R. Nichols, President

American Public Communications Council
Submitted to the House Energy and Commerce Committee
Subcommittee on Telecommunications and the Internet

Hearing on draft legislation to create a statutory framework
for Internet Protocol and Broadband Services (BITS)

November 9, 2005

The American Public Communications Council applauds the Committee's efforts to develop legislation that will foster the innovative uses of Internet protocol ("IP") and broadband Internet transmission communications technology. Nevertheless, in doing so, care must be taken to ensure that the legislation does not adversely affect other important national telecommunications policies. Among those national policies is the Telecommunications Act objective to promote "the widespread deployment of payphone service to the benefit of the general public" by ensuring "that all payphone service providers are fairly compensated for each and every completed intrastate and interstate call."[1] In order to fulfill the Congressional mandate, the FCC has adopted regulations requiring telecommunications carriers to compensate payphone service providers ("PSPs") for the use of payphones to make credit card and other coinless calls. We urge you to explicitly state in any IP/BIT legislation that PSPs must continue to be

[1] 47 U.S.C. § 276(b)(1)(A). See generally 47 U.S.C. § 276 (devoted entirely to payphones).

625 Slaters Lane • Suite 104 • Alexandria, VA • 22314 • 703-739-1322 • Phone • 703-739-1324 Fax

compensated for the use of their payphones regardless of the technology by which coinless calls are transmitted.

Any legislation should explicitly provide that (1) payphone-originated calls are subject to compensation requirements regardless of whether IP/BIT technology is used to transmit or complete the call, and (2) when an IP/BIT-enabled provider completes a coinless call from a payphone, the IP/BIT-enabled service provider is liable to pay compensation in the same manner as circuit-switched service providers.

Background

There are approximately 1.3 million payphones deployed nationwide. This number has declined from over 2 million payphones in 1997. Approximately 500,000 of these payphones are owned and operated by independent PSPs. The American Public Communications Council ("APCC") is the association representing the independent PSPs.

Payphones form a critical part of the nation's telecommunications infrastructure. They play an essential role during times of emergency such as the terrorist attacks of September 11, 2001, and the devastating hurricanes that recently struck the Gulf Coast. In addition, people rely on payphones every day to place emergency 911 calls to reach ambulances, fire departments and police.

Payphones also continue to provide an important, reliable, inexpensive and accessible link to the communications network, particularly in rural areas. Payphones remain an important part of our country's ability to provide universal access to the telecommunications network for all Americans. While

payphones are essential to the nearly fifty percent of the American public that do not own cell phones, they remain important to everyone when cell phone batteries die, cellular signals are unavailable and in remote and rural areas where cellular signals can be scarce. They are also used extensively for toll-free social service calls made by mothers, veterans and the unemployed. And, payphones remain critical to the 8.7 million American households that do not have wire line or wireless telephones in their homes.

Federal Policy Plays An Essential Role in Ensuring Availability of Payphones

In any legislation updating our telecommunications laws, Congress should preserve its policy of promoting the widespread availability of payphones. In the Telecommunications Act of 1996, Congress required the FCC to promote competition and "the widespread deployment of payphone service" by ensuring that PSPs are "fairly compensated for each and every completed intrastate and interstate call."[2] As the legislative history of Section 276 makes clear, the intent of the provision is to ensure that PSPs are compensated whenever their payphone equipment is used to place a call.[3]

The FCC's compensation plan implementing this statute has two basic components, each addressing one of the most common forms of payphone calling. The majority of calls made from payphones are made by depositing coins. PSPs are able to collect compensation on their own for these coin calls. About 25-30% of payphone calls, however, are coinless calls made to toll-free or access code numbers. These calls must be routed to the service provider associated with the toll-free number, rather than a service provider selected by

[2] 47 U.S.C. § 276(b)(1)(A).
[3] H.R. Rep. No. 104-204, pt. 1, at 88 (1995).

the PSP.[4] For these "dial-around" calls, PSPs are unable to collect compensation on their own. Dial-around calls include both "subscriber 800" calls (such as 1-800-FLOWERS) paid for by the called party and "access code" calls (such as 1-800-CALLATT) paid for with prepaid or postpaid calling cards.

To ensure that dial-around calls contribute their fair share of the costs of maintaining a payphone, the FCC has adopted rules requiring telecommunications carriers to compensate PSPs for coinless "dial around" calls originating from payphones.[5] Currently, the rule requires "Completing Carriers" to pay PSPs a dial-around compensation rate of $.494 per coinless call.

Carriers keep track of dial-around calls by capturing "ANI information digits" that are transmitted with payphone calls. Without the transmittal of these identifying digits, the appropriate party would not be aware that a call was made from a payphone and thus compensable to a PSP. Local exchange carriers ("LECs") are required to transmit payphone-specific ANI information digits with each call originating from a payphone. While most dial-around calls are completed by one of the large facilities-based interexchange carriers (such as AT&T, MCI and Sprint), a substantial percentage of dial-around calls are completed by resellers who own and operate their own switches, and who are also supposed to capture the ANI information digits that allow them to track and pay for completed calls from payphones.

[4] There are a small number of coinless calls that are dialed with a "0" and are completed by a carrier or service provider selected by the PSP.
[5] 47 CFR § 1300 et. seq.

Payphone Calls Are Increasingly Carried by Means of IP/BIT

Increasingly, carriers are using IP and BIT technologies to carry dial-around pay phone calls. A number of service providers have already claimed that when they use IP/BIT, they are exempt from the FCC's dial-around compensation rules. Although APCC strongly disputes these claims, the mere fact that they are being made highlights the need for any IP/BIT legislation to reaffirm that the dial-around compensation requirement applies to IP/BIT calls originating from payphones.

Various ways in which IP/BIT-enabled communications may be used to complete payphone calls are illustrated in the Appendix to this statement. The diagrams in the Appendix show the routing of a call and the transmission and capturing of the ANI information digits in a conventional circuit-switched environment. In addition, the diagrams show that in an IP/BIT environment, there are questions about whether ANI information digits are properly transmitted and captured. The diagrams also show that, once a call from a payphone is converted to IP/BIT format, the call can be terminated in the PSTN or in an IP/BIT environment. Finally, the diagrams show that not only access code calls but also subscriber 800 calls from payphones are migrating to an IP/BIT format.

As you can see from the diagrams, there are many ways in which calls are transmitted. What is striking about all these illustrations, however, is that regardless of the particular routing or the mix of conventional and IP/BIT transmission, *in every case, the consumer's use of the payphone is the same.* From the caller's perspective, there is no difference between an IP/BIT-enabled payphone

call and its circuit-switched counterpart. In an access code call, for example, the payphone caller dials a ten-digit North American Numbering Plan toll-free number, reaches a calling card or prepaid card platform, provides billing information, and dials the called party's ten-digit telephone number. The card holder is billed in the same manner as in a circuit-switched communication. In these and other respects, the communication appears to the parties no different from an ordinary circuit-switched telephone communication.

IP/BIT Legislation Must Ensure That PSPs Can Collect Compensation For Any Dial-Around Call That Utilizes IP/BIT

The Telecommunications Act requires that PSPs be compensated for "each and every" completed payphone call, without distinction. Certain IP/BIT-enabled service providers, however, have taken the position that they are not required to pay dial-around compensation.[6] The IP/BIT-enabled providers' argument is that IP/BIT-enabled service providers are "information service providers," not "telecommunications service providers," and consequently are not "Completing Carriers" subject to the FCC's compensation rule. Such claims of exemption from payphone compensation are likely to increase as traffic continues to shift from the PSTN to IP/BIT-enabled networks. And there is no way to know how many other IP/BIT-enabled service providers are opting to remain silent without paying compensation.

[6] At least two IP-enabled service providers, iBasis and Callipso, have submitted filings to the Commission in which they denied that they are subject to the dial-around compensation rules. *See* Callipso Corporation, Motion for Extension of Time, CC Docket No. 96-128 (filed June 23, 2004); iBasis, Inc., Updated Submission in CC Docket No. 96-128 Addressing C.F.R. Section 64.1300 et seq. (filed November 24, 2004) ("iBasis Updated Submission"). These service providers stated that they were willing to pay compensation "voluntarily," but to APCC's knowledge neither one has yet submitted the FCC required audit report verifying that they are accurately tracking payphone calls. Moreover, compensation that is purely "voluntary" can be terminated at any time.

From the perspective of the caller and from the perspective of the PSP itself, there is no material distinction between a payphone-originated communication that uses the PSTN entirely and one that uses an IP/BIT network after it leaves the payphone. In either case, (1) the caller uses the payphone in the same way, (2) the caller and called party derive a benefit from using the payphone, (3) the payphone is tied up for the duration of the communication, precluding other revenue-generating uses of the payphone, and (4) the PSP is unable to prevent the caller from using the payphone. It would be inequitable to both PSPs and circuit-switched carriers if, just because the service provider handling the communication makes use of an IP/BIT network in order to complete the call, the PSP was not entitled to be compensated for that call.

To ensure that PSPs are fairly compensated and that there is no erosion of payphone deployment, any legislation addressing IP/BIT services should explicitly provide that payphone-originated calls are subject to compensation under Section 276 regardless of whether IP or BIT technology is used to complete the call, and that service providers using IP or BIT are liable to pay compensation in the same manner as circuit-switched service providers. We urge you to amend the draft legislation to include the attached language.

11/9/2005
American Public Communications Council
Statement

Payphone Dial-Around Compensation Provision

For the draft legislation to create a statutory framework for Internet Protocol and Broadband Services (BITS)

The Commission shall establish regulations to ensure that payphone service providers are fairly compensated for each and every completed interstate and intrastate communications using their payphone when any portion of such communication uses BIT. Each BIT provider, BITS provider, or VOIP service provider shall be subject to and comply with such regulations.

Appendix 1

Conventional DAC Call:
Calling Card or Prepaid Card Over Facilities-Based IXC

This is the most straight-forward conventional DAC scenario. There is only a single F-IXC in the call path, and that F-IXC is the Completing Carrier.

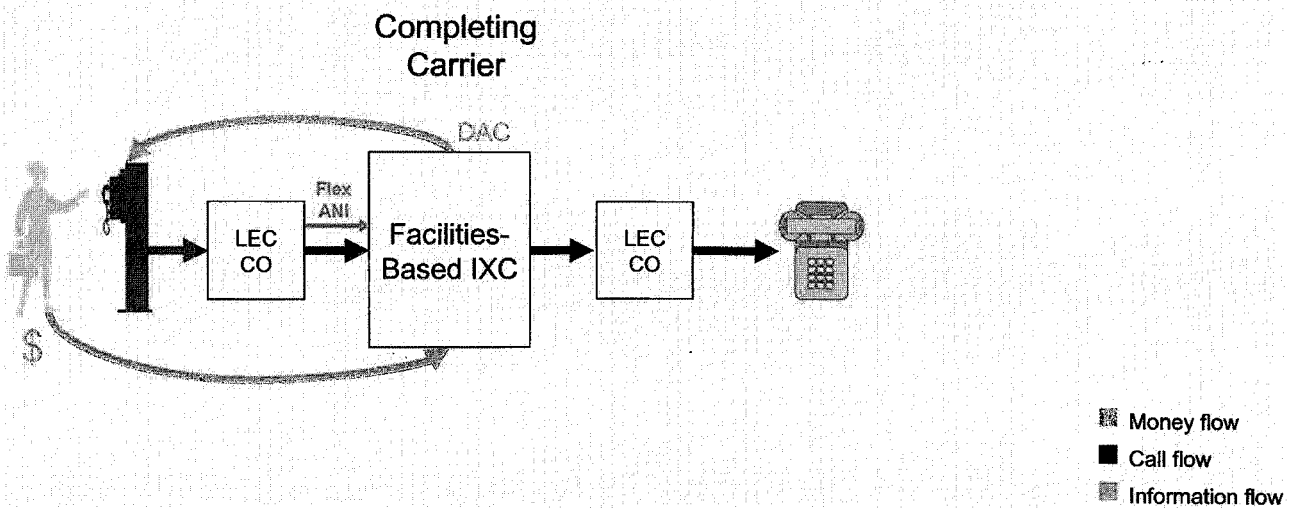

IP-Enabled DAC Call:

Calling Card or Prepaid Card Over IP-enabled Provider to PSTN

Here, the IP-enabled Provider takes the place of the "Completing Carrier." Nothing else changes. The caller is IP-enabled Provider's end user. One example of this scenario is AT&T's "IP-in-the-middle" long haul.

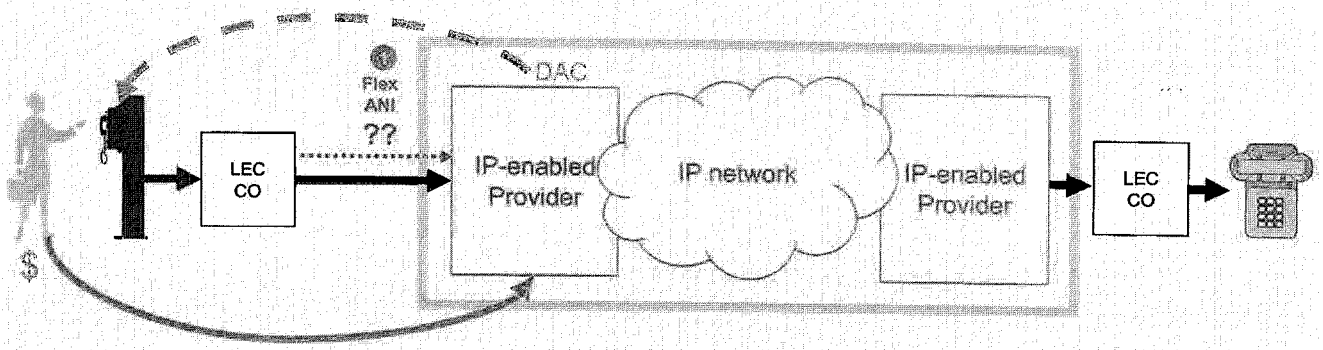

1 LEC Sends Flex ANI. Unclear if IP-enabled Provider receives Flex ANI.

Money flow
Call flow
Information flow

IP-Enabled DAC Call:
Calling Card or Prepaid Card Over IP-enabled Provider to Computer or IP Phone

Here again, the IP-enabled Provider takes the place of the "Completing Carrier." The only difference between this scenario and the previous slide is that here the call terminates in IP rather than on the PSTN. The non-PSTN termination should not affect PSPs' right to DAC.

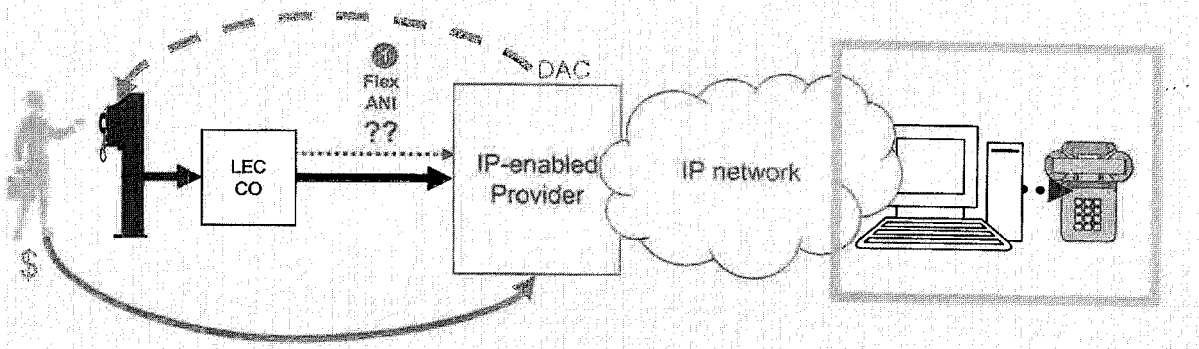

1 LEC Sends Flex ANI. Unclear if IP-enabled Provider receives Flex ANI.

- Money flow
- Call flow
- Information flow

Conventional DAC Call:

Calling Card or Prepaid Card Over Switch-Based Reseller/IXC

In this variation on the first conventional DAC scenario, a SBR is added to the call path in addition to the F-IXC, and is the "Completing Carrier."

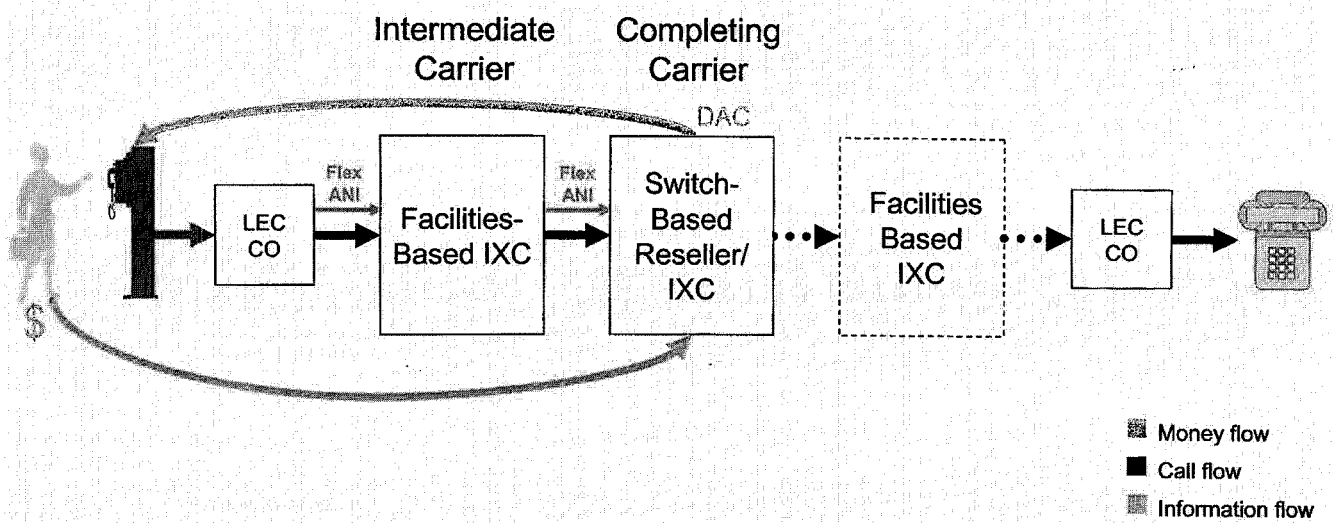

IP-Enabled DAC Call:
Calling Card or Prepaid Card Over IP-enabled Provider to PSTN

Here, the IP-enabled Provider is inserted in the call path in the place of the SBR "Completing Carrier." The caller is the IP-enabled Provider's end user. The F-IXC plays the same role as it does in the conventional SBR DAC scenario shown on the previous slide.

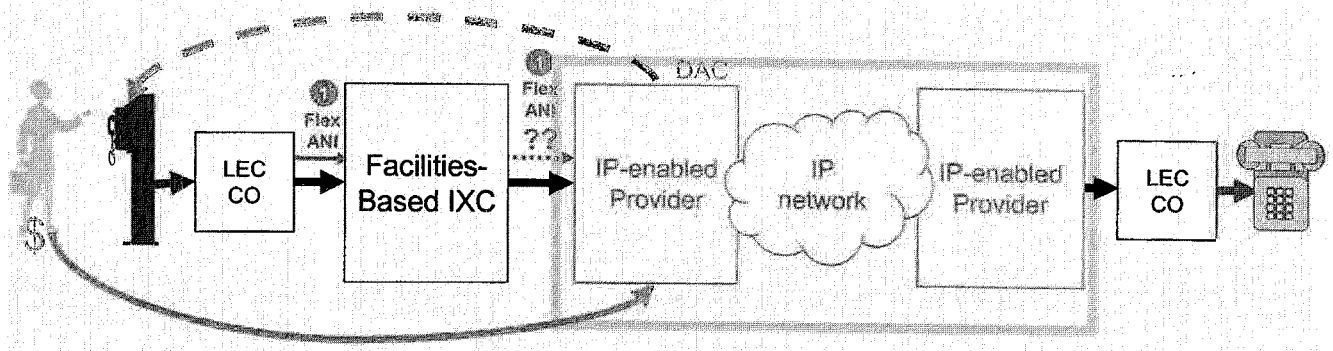

1 F-IXC receives and sends Flex ANI; IP-enabled Provider may not be able to receive.

- Money flow
- Call flow
- Information flow

IP-Enabled DAC Call:
Calling Card or Prepaid Card Over IP-enabled Provider to Computer or IP Phone

As in the previous slide, the IP-enabled Provider is inserted in the call path in the place of the "Completing Carrier," and the caller is the IP-enabled Provider's end user. The only difference is that here the call terminates in IP instead of on the PSTN.

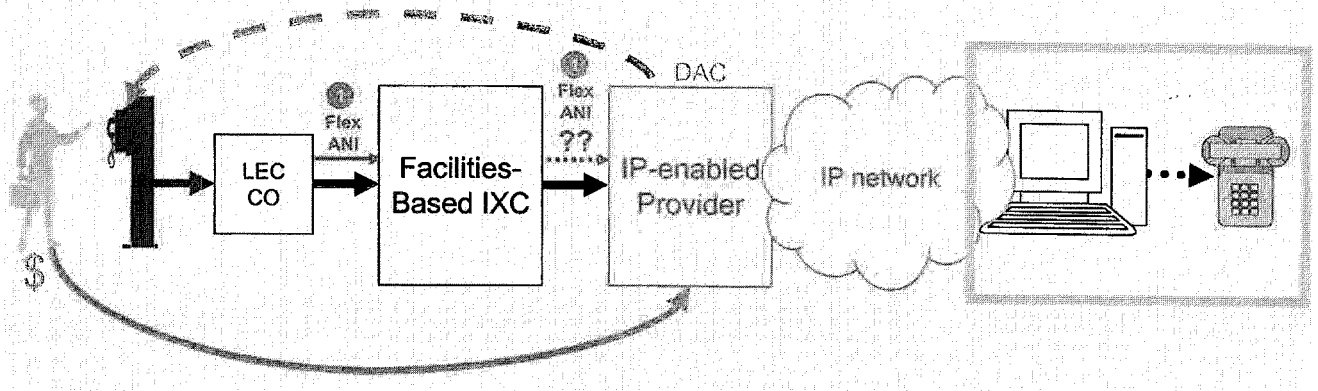

F-IXC receives and sends Flex ANI; IP-enabled Provider may or may not be able to receive.

- Money flow
- Call flow
- Information flow

Conventional DAC Call:
Subscriber 800 Call Over Switch-Based Reseller/IXC

In this variant, a conventional DAC SBR call is shown as a subscriber 800 call instead of a calling card call.

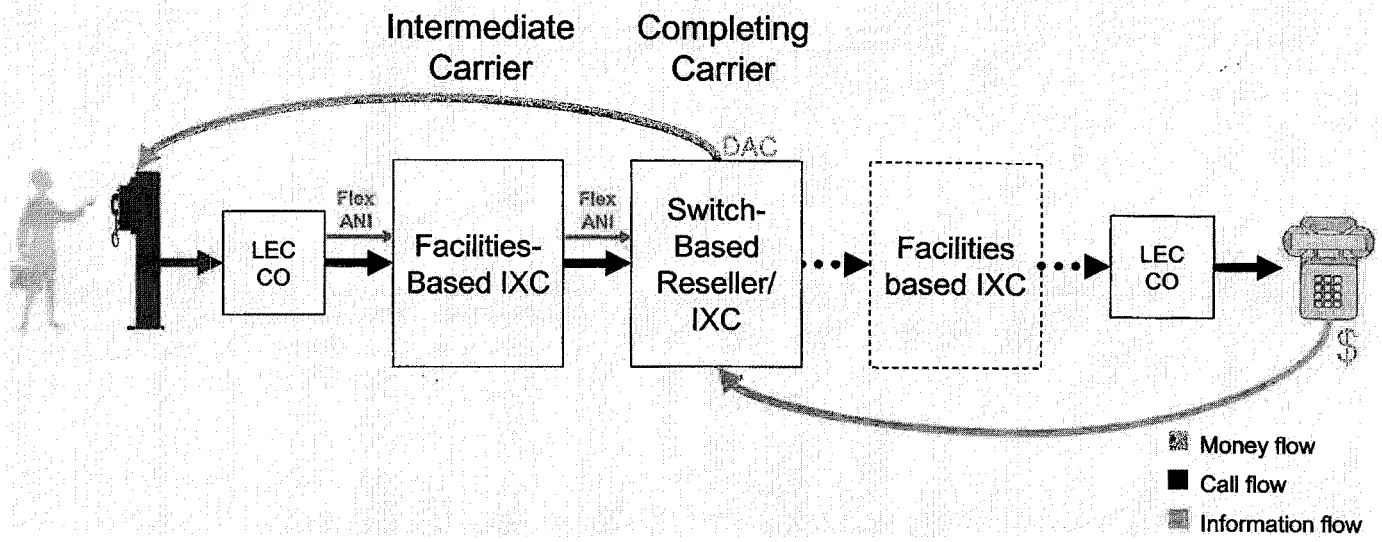

American Public Power Association

2301 M Street, N.W.
Washington, D.C. 20037
202-467-2900; fax: 202-467-2910
www.APPAnet.org

Written Statement of Alan H. Richardson
President & CEO
American Public Power Association

To the House Telecommunications & Internet Subcommittee

Staff Discussion Draft of Legislation to Create a Statutory Framework for Internet Protocol and Broadband Services

Wednesday, November 9, 2005

APPA is the national service organization representing the interests of the nation's more than 2,000 community-owned electric utilities that serve over 43 million Americans. The utilities include state public power agencies, municipal electric utilities, and special utility districts that provide electricity and other services to some of the nation's largest cities such as Los Angeles, Seattle, San Antonio, and Jacksonville, as well as some of its smallest towns. The vast majority of these public power systems serve small and medium-sized communities, in 49 states, all but Hawaii. In fact, 75 percent of publicly-owned electric utilities are located in communities with populations of 10,000 people or less.

APPA commends the Subcommittee for holding a hearing on the revised discussion draft of legislation to create a statutory framework for Internet protocol (IP) and broadband services. We have reviewed the discussion draft and are pleased that it includes language in section 409 to ensure that public power systems and other governmental entities that want to provide their communities with affordable broadband services will be able to do so. We strongly support the language in that section as it is currently drafted.

Community owned utilities are providing a wide array of advanced communications services, such as high-speed Internet access, voice-over-Internet protocol (VoIP), and cable television, in underserved areas using a wide variety of platforms – fiber-to-the-subscriber, broadband over power lines, hybrid fiber-coaxial, and wireless. They are also fostering a competitive marketplace where consumers are benefiting from the availability of advanced communications services that are the lifeblood of economic development and can support rich educational and employment opportunities, advanced health care, regional competitiveness, public safety, homeland security, and other benefits that contribute to a high quality of life. Section 409 will ensure that public power systems can meet the needs of their communities by providing broadband and IP enabled services where such services are unavailable, inadequate, or too expensive.

In addition to recognizing the important role public power systems and other governmental entities can play in helping to achieve affordable universal broadband access, section 409 would preclude a public provider of broadband Internet transmission services (BITS), VoIP services, and broadband video services from using its regulatory authority to discriminate in favor of itself. While none of our member utilities regulate communications providers, we do not believe any of the local governments, of which our members are a part, would use their limited regulatory authority in such a manner. However, we believe the competition neutrality provision in section 409(b) is an appropriate and reasonable means to prevent possible discriminatory behavior.

APPA is also pleased that there is no reference to a provision to prevent cross-subsidies like there was in the first version of the discussion draft. Such a provision could threaten the underlying goal of section 409 to enable communities to provide their citizens and businesses with access to essential broadband and IP enabled services. Community owned electric utilities are extremely careful to avoid cross-subsidizing their communications services with revenues from electric rate payers. State and local "enterprise" rules prevent cross-subsidization between utilities and require each utility to be financially self-sufficient. Also, Government Accounting Standards Board Rule 34, which many localities follow,

requires local governments to separately account for activities generally financed and operated like private businesses (i.e. utility services). The purpose of Rule 34 is to make the annual financial statements of local and state governments more transparent and easier to follow by people that use such information, such as investors, creditors, legislators, and the public. While the rule does not preclude cross-subsidization, it make would make such an action visible to an individual reviewing governmental financial statements.

In addition, the open political and public process under which public power systems must operate serves as a significant deterrent to cross-subsidization. Local officials are very unlikely to ask their constituents to pay higher electric rates to subsidize a broadband project. To do so would subject them to extensive criticism in the local press and from electric rate payers who have the power to vote those officials out of office.

APPA is pleased to support the language in section 409 as currently drafted and looks forward to working with the Subcommittee to help enact section 409 into law.

.ssociation

American Public Power

2301 M Street, N.W.
Washington, D.C. 20037
202-467-2900; fax: 202-

67-2910

www.APPAnet.org

November 8, 2005

The Honorable Fred Upton
Chairman
House Telecom & Internet Subcommittee
2125 Rayburn House Office Building
Washington, D.C. 20515

The Honorable Ed Markey
Ranking Member
House Telecom & Internet
Subcommittee
2108 Rayburn House Office Building
Washington, D.C. 20515

Dear Chairman Upton and Ranking Member Markey:

On behalf of the American Public Power Association (APPA), I am writing to express our strong support for section 409 in the discussion draft of legislation to create a statutory framework for Internet protocol (IP) and broadband services. APPA is the national service organization representing the interests of the nation's more than 2,000 community-owned electric utilities. These utilities include state public power agencies, municipal electric utilities, and special utility districts that provide electricity and other services to over 43 million Americans.

Many of these public power systems were established largely due to the failure of private utilities to provide electricity to smaller communities, which were viewed as unprofitable. In these cases, communities formed public power systems to do for themselves what they viewed to be of vital importance to their quality of life and economic prosperity. Today, cities and towns across the country, including many that own their own public power system, are meeting the new demands of their communities by providing broadband services where such service is unavailable, is inadequate, or is too expensive.

APPA strongly supports the language in section 409 of the discussion draft, which will ensure that public power systems and other governmental entities that want to provide their communities with affordable broadband and IP enabled services will be able to do so. As you know, broadband is essential for economic development and supports rich educational and employment opportunities, advanced health care, and other benefits that contribute to a high quality of life. Communities that lack affordable broadband cannot retain or attract businesses that need broadband interconnectivity to compete in today's global marketplace. Enclosed is a statement we are submitting for the record for tomorrow's hearing on the discussion draft that further elaborates on our reasons for supporting section 409.

Thank you for your leadership on this important issue affecting broadband deployment. APPA is pleased to support the language in section 409 as currently drafted and looks forward to working

with the Subcommittee to help enact section 409 into law. I hope that you will feel free to contact me or the APPA government relations staff with any questions.

Sincerely,

Alan H. Richardson
President & CEO

AHR/DW/*KG*

cc: The Honorable Joe Barton
The Honorable John Dingell

Hearing on a Staff Discussion Draft of the Internet Protocol and Broadband Services Legislation

November 9, 2005
Subcommittee on Telecommunications and the Internet
Follow-Up Questions

Mr. Joel Wiginton

From the Honorable Cliff Stearns

1. How would the application of this new standard, "undue burden," affect you as manufacturers? Are you aware of any failures that have occurred as the result of the current standard "readily achievable"?

As the question suggests, Section 405 of the legislation under consideration would require manufacturers of equipment "used for BIT, BITS, VOIP service, or broadband video service shall ensure that equipment designed, developed, or fabricated after the date of enactment of this Act is designed, developed, and fabricated to be accessible to and usable by individuals with disabilities, unless the manufacturer demonstrates that taking such steps would result in an undue burden." This "undue burden" standard differs from the current "readily achievable" standard in Section 255 the Communications Act, which applies to manufacturers of telecommunications equipment or customer premises equipment. It is consistent with the "undue burden" standard set forth in Section 508 of the Rehabilitation Act of 1973, as amended, which applies when a federal department or agency develops, procures, maintains or uses electronic or information technology equipment.

The change would affect manufacturers of broadband equipment in two ways. First, the proposed language would impose a novel requirement for manufacturers of broadband equipment. Section 255 of the Communications Act applies only to manufacturers of telecommunications equipment. Broadband services, however, do not fall within the Act's definition of "telecommunications services," and thus the Section 255 requirement does not apply to these products. Sweeping equipment used for the access to broadband services into this regulatory paradigm would dramatically increase development costs for these products. Manufacturers of these products would be required to maintain detailed records during the product design process to document whether inclusion of disability-access features created an undue burden. And even a manufacturer that believes in good faith that its products meet the undue burden standard would have to take into consideration the potential costs of administrative and legal challenges.

Second, the legislation would increase the regulatory burden on manufacturers of products currently subject to Section 255. The "undue burden" standard is widely recognized to be higher than the "readily achievable" standard. Manufacturers would lose much of the benefit of experience under the existing standard, and would be forced to assume the costs and uncertainty of complying with the new standard.

Fundamentally, application of the "undue burden" standard would undermine the ability of manufacturers to provide products with a variety of different features and functions that meet the needs of different markets. Under current law, manufacturers of telecommunications consumer products have been able to provide products with bare-bones capabilities at low cost and other products with enhanced capabilities at a fair market price. The change to an "undue burden" standard would result in a regulatory environment that would require every product be equipped with any feature that a single high-end product might be able to employ. The unfortunate result would be that manufacturers could become fearful to innovate in accessibility features, and hold back innovations that would otherwise have benefited consumers with disabilities.

I am not aware of any failures that have occurred as a result of the current, "readily achievable" standard.

Questions From the Honorable Jay Inslee

1. In order to access advanced technologies and services, such as telecommuting, health, IT, and video conferencing, many Americans will soon be seeking broadband speeds capable of at least 50 Mbps, which is much more widely available in other countries. For example, Japan is installing fiber connections to the home capable of these speeds at a rate of 100,000 new subscribers per month, while the United States had roughly 300,000 fiber-to-the-home subscribers, total, as of June 2005. Will your network be capable of meeting this consumer demand for truly high-speed broadband speeds at affordable rates? How will you accomplish these goals? What barriers stand in your way, economic or regulatory? What can Congress do to further incent the deployment of fiber in your network as close to the premise as possible?

Response:

Since the passage of the Telecommunications Act of 1996, NCTA member companies have invested nearly 100 Billion dollars of private risk capital in upgrading America's technological infrastructure. This infrastructure makes high speed internet access and competitive local telephone service, in addition to traditional and advanced multi-channel video service, available to urban and rural markets. This investment has been made while other potential providers of services have remained dormant for most of the past decade.

NCTA's member companies, in nearly every market in the country, already have the most advanced network in their communities and we have every intention of continuing our industry leading technological deployment for the benefit of all Americans.

The best means of incenting our continued deployment of fiber is to ensure that we face our competitors – including the phone companies – on a level playing field and in a stable regulatory environment. It is very difficult for us to formulate business plans, including planned investment, in a world where the rules keep shifting and we must compete not on merit, but against another provider that has a regulatory advantage. It is imperative to our continued ability to attract investors that Congress clarify as soon as possible that like services will be regulated in a like manner.

Another critical part of promoting broadband deployment is to avoid the imposition of unnecessary and burdensome regulation. In particular, any efforts to impose so called "net neutrality" regulations should be rejected. We -- and all of the National Cable and Telecommunications Association's member companies -- have committed that we have not, and will not, block the ability of our high-speed Internet service customers to access any lawful content, application, or services available over the public Internet. Congress's policy of leaving the Internet unregulated has been a great success, encouraging billions of dollars in investment. Any change to this policy, however well-meant, could interfere with cable's ability to innovate and respond to customer demand, and so could have serious repercussions to continued network investment. Given the absence of a market failure, government intervention is not needed, and would pose precisely the type of barrier to deployment that Congress is seeking to dismantle.

2. Congress changed the cable laws in 1992 to prohibit exclusive franchises, but today, very few cable franchise areas are have more than one cable provider. Why is there so little overbuilding in the United States? Will there be more overbuilding -- i.e., more wireline competition for video services -- if Congress streamlines the franchising process? In addition, can such competition be achieved with regulatory parity between cable operators and new entrants?

Response:

At the outset, it is important to note that although not all residents have the choice of service from a second cable operator, residents of nearly every franchise area in the United States can choose to receive video programming from among numerous providers, including direct broadcast satellite (DBS) providers such as DirecTV and EchoStar, broadband service providers (BSPs) such as RCN, municipal overbuilders, mobile video services such as Verizon's V Cast, broadcasters, and Internet video.

With regard specifically to overbuilders, it has been recognized that although cable franchises to serve a community are not exclusive, overbuilding existing cable lines to every home is often not an economically viable means of entering a new market, for reasons entirely unrelated to the franchising scheme. As the FCC has observed, new potential overbuilders face "considerable challenges" in overcoming the "historical difficulties of overbuilding," including raising the necessary funds to replicate the capital-intensive networks already established by existing cable operators.[1/] To serve a community, cable operators typically must deploy facilities that pass and extend to all households in the community, whether or not particular households choose to purchase their service. The viability of such an investment required that a substantial portion of the homes passed by the system did choose to purchase the system. As a result, the economics of cable television construction and operation simply do not support overbuilding by many new entrants. These concerns do not apply, of course, to all overbuilders. Entry by telephone companies, who already have lines to every home and do not need to undertake the expense of replicating the entire cable system in order to enter the market, face very different economics and their experience may prove quite different.

It is also noteworthy that whether competition comes from overbuilders or from other sources of video programming is not as important as once thought. While a 2003 report by the U.S. General Accounting Office ("GAO") found that the average prices of cable operators facing competition from overbuilders tend to be lower than the prices charged by cable operators in areas without overbuilds, that study has now been demonstrated to be flawed. GAO examined only a snapshot of prices at a given point in time, and did not study whether these prices were sustainable over the long term sufficient to make those markets more "competitive" than markets without overbuilders.[2/] In fact, overbuilders' prices were not sustainable. Because the market has become substantially more competitive, due primarily to the increasing popularity of DBS service, new overbuilders entering the market found that cable operators already had responded to DBS competition by pricing their service competitively, and that undercutting current cable prices was difficult. The prices such overbuilders charged to win customers were artificially low and could not be sustained for more than an introductory period. As a result, such prices could not be viewed as representative of a competitive standard that all cable operators would meet if they faced effective competition. When the entry period was over, overbuilders were forced to charge higher prices or fail. In other words, contrary to GAO's snapshot conclusion, overbuild communities, where they exist, are not more competitive than non-overbuild areas.

1/ *See In the Matter of the Annual Assessment of the Status of Competition in the Market for the Delivery of Video Programming*, 17 FCC Rcd. 26901, ¶102 (2002) ("*Ninth Annual Video Competition Report*"); *In the Matter of the Annual Assessment of the Status of Competition in the Market for the Delivery of Video Programming*, 17 FCC Rcd. 1244 ¶¶ 107-08 (2002) ("Historically, overbuilding incumbent cable systems has been economically difficult" likely because, in part, of the "difficulties inherent in entering the capital-intensive MVPD industry against entrenched competitors").

2/ GAO, Report to the Chairman, Committee on Commerce, Science, and Transportation, U.S. Senate, "Issues Related to Competition and Subscriber Rates in the Cable Television Industry" (Oct. 2003).

It is noteworthy that despite their protestations, the telephone companies have not found the franchising process to be any impediment to entering the video business. After several months' experience with the franchising process, Verizon itself recently confirmed that franchising timing was not causing any delay in its deployment plans, that they "don't think there's a big issue associated with timing," and that they "don't feel that there's any impediment to our rolling out FiOS during the year 2006."[3/]

3/ Conference Call Transcript, VZ-Q4 2005 Verizon Earnings Conference Call, Jan. 26, 2006.

Questions From the Honorable Cliff Stearns

1. In the 1996 Telecommunications Act, Congress provided for a special pole attachment rate that applies only to cable television systems. Many thought that this essentially provided a necessary subsidy to the then-emerging cable TV industry. Do you still believe that these companies need to be subsidized by electric ratepayers?

Response:

We do not believe that the pole attachment rates we pay represent any subsidy by electric ratepayers to cable companies. Indeed, the Supreme Court has specifically found that the formula used to calculate cable pole attachment rates is just and reasonable, specifically because it fully compensates utilities for "all pole-related costs, including administrative, maintenance, and tax expenses, as well as depreciation and a rate of return..."[4/]

As the FCC has noted, "cable attachers generally have no practical or cost-effective alternative to attachments to existing poles," especially given that often, "the cable attacher is already on the pole and conducting business."[5/] Due to the monopoly power utilities hold over cable attachers, and the fact that cable attachers receive only a limited property interest in the pole, the FCC has concluded that the formula more than adequately compensates pole owners.[6/] The FCC was specifically upheld in this decision.[7/]

We also respectfully disagree that any such subsidy was the intent behind the rates established by the Pole Attachment Act. As the FCC has noted, the purpose of Section 224 was "to remedy the inequitable position between pole owners and those seeking pole attachments" and ensure that "the nature of this relationship is not altered when the cable operator seeks to provide additional service."[8/] The FCC further has noted that prohibiting access at the cable rate would penalize companies seeking to promote competition by offering non-traditional services such as Internet access services. The Supreme Court has upheld this approach as well.[9/]

2. Section 407 of the staff discussion draft apparently could have the effect of granting to all attaching entities - cable, telecom, and broadband - the lowest possible regulated rates for attaching their wires to utility poles. It is my understanding that this regulated "pole attachment" rate is set so artificially low that it provides a significant subsidy for companies that attach their lines to utility poles, and that the difference must be made up by the utility companies and their customers. I also understand this provision is strongly supported by your industry. While I can appreciate your desire to have everyone pay the same pole attachment

---

4/ *In the Matter of Alabama Cable & Telecommunications Ass'n v. Alabama Power Co.*, 16 FCC Rcd 12209, ¶ 48 (2001), citing *FCC v. Florida Power Corp.*, 480 U.S. 245 (1987).

5/ *Id.* ¶ 54.

6/ *Id.*

7/ *Alabama Power Co. v. FCC*, Case No. 00-14763 (11th Cir., November 14, 2002).

8/ *Implementation of Section 703(e) of the Telecommunications Act of 1996; Amendment of the Commission's Rules and Policies Governing Pole Attachments*, 13 FCC Rcd 6777 (1998).

9/ *NCTA v. Gulf Power*, 534 U.S. 327 (2002).

rate for competitive reasons, wouldn't it make more sense for that rate to be set at a level that spreads the costs around more fairly? This would avoid forcing utility customers to subsidize telecom and broadband companies, while providing competitive balance among the attaching entities, wouldn't it?

Response:

As described above, we respectfully disagree that the pole attachment rates paid by cable companies are artificially low. Rather, we believe that the rates represent a fair price for the pole attachment since they fully compensate pole owners for all costs, plus a reasonable profit. Forcing all broadband companies to pay a higher rate would impose heavy costs on an emerging industry that Congress has otherwise sought to promote. If Congress is truly concerned about promoting broadband deployment across the nation, it should ensure that utilities are not able to use their monopoly control over poles, a necessary input into provision of the service, to impose high, unwarranted costs.

○