CREATING A 21ST CENTURY GOVERNMENT

HEARINGS

BEFORE THE

COMMITTEE ON GOVERNMENT REFORM AND OVERSIGHT HOUSE OF REPRESENTATIVES

ONE HUNDRED FOURTH CONGRESS

FIRST SESSION

JULY 14; SEPTEMBER 9; OCTOBER 6, 7, 9, AND 20, 1995

Printed for the use of the Committee on Government Reform and Oversight

U.S. GOVERNMENT PRINTING OFFICE

26-449 CC WASHINGTON : 1996

For sale by the U.S. Government Printing Office
Superintendent of Documents, Congressional Sales Office, Washington, DC 20402
ISBN 0-16-053526-3

AUTHENTICATED
U.S. GOVERNMENT
INFORMATION
GPO

COMMITTEE ON GOVERNMENT REFORM AND OVERSIGHT

WILLIAM F. CLINGER, JR., Pennsylvania, *Chairman*

BENJAMIN A. GILMAN, New York
DAN BURTON, Indiana
J. DENNIS HASTERT, Illinois
CONSTANCE A. MORELLA, Maryland
CHRISTOPHER SHAYS, Connecticut
STEVEN SCHIFF, New Mexico
ILEANA ROS-LEHTINEN, Florida
WILLIAM H. ZELIFF, JR., New Hampshire
JOHN M. McHUGH, New York
STEPHEN HORN, California
JOHN L. MICA, Florida
PETER BLUTE, Massachusetts
THOMAS M. DAVIS, Virginia
DAVID M. McINTOSH, Indiana
JON D. FOX, Pennsylvania
RANDY TATE, Washington
DICK CHRYSLER, Michigan
GIL GUTKNECHT, Minnesota
MARK E. SOUDER, Indiana
WILLIAM J. MARTINI, New Jersey
JOE SCARBOROUGH, Florida
JOHN B. SHADEGG, Arizona
MICHAEL PATRICK FLANAGAN, Illinois
CHARLES F. BASS, New Hampshire
STEVEN C. LATOURETTE, Ohio
MARSHALL "MARK" SANFORD, South Carolina
ROBERT L. EHRLICH, JR., Maryland

CARDISS COLLINS, Illinois
HENRY A. WAXMAN, California
TOM LANTOS, California
ROBERT E. WISE, JR., West Virginia
MAJOR R. OWENS, New York
EDOLPHUS TOWNS, New York
JOHN M. SPRATT, JR., South Carolina
LOUISE McINTOSH SLAUGHTER, New York
PAUL E. KANJORSKI, Pennsylvania
GARY A. CONDIT, California
COLLIN C. PETERSON, Minnesota
KAREN L. THURMAN, Florida
CAROLYN B. MALONEY, New York
THOMAS M. BARRETT, Wisconsin
GENE TAYLOR, Mississippi
BARBARA-ROSE COLLINS, Michigan
ELEANOR HOLMES NORTON, District of Columbia
JAMES P. MORAN, Virginia
GENE GREEN, Texas
CARRIE P. MEEK, Florida
CHAKA FATTAH, Pennsylvania
BILL BREWSTER, Oklahoma
TIM HOLDEN, Pennsylvania

BERNARD SANDERS, Vermont (Independent)

JAMES L. CLARKE, *Staff Director*
KEVIN SABO, *General Counsel*
JUDITH McCOY, *Chief Clerk*
KRISTINE SIMMONS, *Professional Staff Member*
KIM CUMMINGS, *Professional Staff Member*
BUD MYERS, *Minority Staff Director*

CONTENTS

	Page
Hearing held on:	
July 14, 1995	1
September 9, 1995	277
October 6, 1995	384
October 7, 1995	501
October 9, 1995	585
October 20, 1995	755
Statement of:	
Anderson, Curt	481
Bailey, Tom, Guilford County, NC	845
Berkin, Michael, senior vice president, Performance and Service Quality, Dun & Bradstreet; Frank Sweeney, vice president and controller, ITT Avionics; Irvin D. Reid, president, Montclair State University; Len Lauer, vice president, sales, Bell Atlantic–New Jersey; and John E. Anderson, director of procurement, Public Service Electric & Gas Co	349
Bohl, Elizabeth, Yadkin County, NC	849
Bonney, Ann	441
Bowdich, Joe, sheriff, Bernalillo County, NM	686
Bradley, Walter, Lieutenant Governor, State of New Mexico; Stephanie Gonzales, secretary of state, State of New Mexico; and Heather Wilson, secretary, Children, Youth and Families, State of New Mexico	591
Campbell, Tom, State Representative	473
Carlson, John, chairman, Washington Institute for Policy Studies	428
Carson, Deborah	446
Clinard, Frank, Libertarian Party of New Mexico	718
Conrad, James, director, Department of Administrative Services, State of Ohio; Dr. Keith Rasey, director of Federal Government relations, Greater Cleveland Growth Association; Claire Freeman, executive director, Cuyahoga Metropolitan Housing Authority; Daniel Whitmire, township trustee, Austinburg Township, OH; and Robert A. Gardner, county commissioner, Lake County, OH	88
Cooksey, Patricia	265
Cottingham, Cheryl, Gastonia, NC	847
Dionne, Jodi	482
Drummond, Douglas, vice mayor, Long Beach, CA; and Henry Taboada, assistant city manager, Long Beach, CA	503
Ehninger, Doris	153
Fakult, Joseph	151
Fitzgerald, Eileen H	261
Fleisch, Bud	479
Fox, Gerald, Mecklenburg County manager	809
Gilreath, Frank, Charlotte, NC	821
Helgeland, Miriam	476
Henderson, Mark, president, New Mexico Branch of Associated General Contractors	698
Hobbs, Ted, State Representative, Bernalillo County	705
Horowitz, Michael, senior fellow, the Hudson Institute and former General Counsel of the Office of Management and Budget; and Professor William Marshall, Case Western Reserve University School of Law	229
James, Bill, chairman, Charlotte Privatization/Competition Advisory Committee; and Pat Garrett, president, Charlotte–Mecklenburg Housing Partnership	786
Johnson, Earnest, Carrboro, NC	849
Kasper, Don	441
Kennedy, Richard	484

Page

Statement of—Continued
Kromer, Bernard 153
Larsen, Jack, vice president of energy and environment, Weyerhaeuser Co.; Gwen Fraser, CEO and owner, Fraser, Inc.; Lawrence Riggs, president, Services Group of America; and Paul Tegantvoort, owner, Seattle Automotive Distributing 449
Lawrence, William B., executive vice president for planning, technology and government affairs, TRW Inc.; M. Thomas Moore, chairman and CEO, Cleveland-Cliffs Inc.; Frank Altimore, vice president for business process design, LTV Steel Co., Inc.; Karen R. Kleinhenz, regional president, Society National Bank, Akron, OH; and Roger Sustar, president and owner, Fredon Corp 159
Lawson, Barney, former owner, Modern Management, Inc.; and Christopher Rolfe, vice president of organization effectiveness, Duke Power Co 824
Lefebvre, Lowell 156
Lesiak, Donald 155
Martin, Lynn, former Secretary, U.S. Department of Labor, accompanied by Elizabeth Baron; Michael White, mayor of Cleveland; Edward G. Rendell, mayor of Philadelphia, PA; and J. Kenneth Blackwell, treasurer, State of Ohio 12
McCrory, Pat, Mayor Pro Tempore, Charlotte, NC 843
Miller, Joe, Charlotte, NC 851
Miller, Lana 480
Minarcin, Terrell Alan 440
Mitchell, Mary Ann, State Representative 404
Montano, General Mel, New Mexico adjutant general 692
Moon, Randy 445
Mularz, Mitchell 443
Murphy, Robert H., senior vice president for organization and human resources, Rockwell International; and D. Sherrill Clements, Sr., executive marketing director, Oracle Corp 550
Nadall, Kathleen 150
Olmi, Tony, president, New Mexico Christian Coalition 712
Peck, Richard, president, University of New Mexico 669
Pina, Ed 444
Pittman, Leroy, small business owner, Union County, NC 819
Pogorzelski, Conrad, Gastonia, NC 812
Rael, Lawrence, chief administrative officer, city of Albuquerque; and Barbara Seward, member, Bernalillo County Commission 626
Ramo, Roberto Cooper, president, American Bar Association 695
Reckseit, Sandra 157
Red, James, union steward, American Federation of Government Employees, Local 4041 670
Rhodes, George W., vice president and technical director, Quatro Corp.; Mary Molina Mescall, Hispanic Roundtable; and Steve Strunk, chief administrative officer, Boatmen's Sunwest, Inc 650
Robbins, Randy 442
Rogers, Tom, Concord Coalition Citizens Council of North Carolina 817
Rose, Joe, Concord Coalition 708
Schundler, Bret, mayor, city of Jersey City; James W. Treffinger, county executive, Essex County; William J. Pascrell, Jr., mayor, city of Paterson 285
Seiler, Mark, Gaston County, NC 814
Shoemaker, Treasure 479
Simmons, Keith 149
Sorenson, Jay, Sierra Club 706
Spruyt, Chris, Wake County, NC 820
Stoker, Michael, chairman, California Agricultural Labor Relations Board; Richard Terzian, chairman, Commission on California State Government Organization and Economy, the Little Hoover Commission; and, Fred Silva, executive secretary, California Constitution Revision Commission 519
Vance, Chris, council member, Metropolitan King County Council 390
Vandall, David 150

Page

Statement of—Continued
Vander Ark, Thomas J., superintendent, Federal Way School District; Paul Sommers, executive director, northwest policy center, University of Washington; Richard Zimmerman, president, Washington Performance Partnership; and John Carlson, chairman, Washington Institute for Policy Studies 406
Vinroot, Richard, mayor, Charlotte, NC; and Wendell White, city manager, Charlotte, NC 763
Weichert, Megan, student, Thomas Jefferson High School 447
Whitman, Christine Todd, Governor, State of New Jersey 338
Letters, statements, etc., submitted for the record by:
Altimore, Frank, vice president for business process design, LTV Steel Co., Inc., prepared statement of 185
Baron, Elizabeth, prepared statement of 26
Blackwell, J. Kenneth, treasurer, State of Ohio, prepared statement of 70
Bowdich, Joe, sheriff, Bernalillo County, NM, prepared statement of 688
Bradley, Walter, Lieutenant Governor, State of New Mexico, prepared statement of 596
Clements, D. Sherrill, Sr., executive marketing director, Oracle Corp., prepared statement of 566
Clinard, Frank, Libertarian Party of New Mexico, prepared statement of 719
Clinger, Hon. William F., Jr., a Representative in Congress from the State of Pennsylvania, prepared statements of 4, 279
Conrad, James, director, Department of Administrative Services, State of Ohio, prepared statement of 91
Cooksey, Patricia, prepared statement of 267
Fitzgerald, Eileen H., prepared statement of 263
Fox, Hon. Jon D., a Representative in Congress from the State of Pennsylvania, prepared statement of 757
Fraser, Gwen, CEO and owner, Fraser, Inc., prepared statement of 457
Freeman, Claire, executive director, Cuyahoga Metropolitan Housing Authority, prepared statement of 119
Gardner, Robert A., county commissioner, Lake County, OH, prepared statement of 137
Garrett, Pat, president, Charlotte–Mecklenburg Housing Partnership, prepared statement of 799
Henderson, Mark, president, New Mexico Branch of Associated General Contractors, prepared statement of 700
Horowitz, Michael, senior fellow, the Hudson Institute and former General Counsel of the Office of Management and Budget, prepared statement of 232
James, Bill, chairman, Charlotte Privatization/Competition Advisory Committee, prepared statement of 790
Kleinhenz, Karen R., regional president, Society National Bank, Akron, OH, prepared statement of 202
Larsen, Jack, vice president of energy and environment, Weyerhaeuser Co., prepared statement of 452
Lauer, Len, vice president, sales, Bell Atlantic–New Jersey, prepared statement of 363
Lawrence, William B., executive vice president for planning, technology and government affairs, TRW Inc., prepared statement of 162
Lawson, Barney, former owner, Modern Management, Inc., prepared statement of 828
Marshall, Professor William, Case Western Reserve University School of Law, prepared statement of 246
Martin, Lynn, former Secretary, U.S. Department of Labor, prepared statement of 16
Martini, Hon. William J., a Representative in Congress from the State of New Jersey, prepared statement of 758
Moore, M. Thomas, chairman and CEO, Cleveland-Cliffs Inc., prepared statement of 176
Murphy, Robert H., senior vice president for organization and human resources, Rockwell International, prepared statement of 553
Olmi, Tony, president, New Mexico Christian Coalition, prepared statement of 713
Pascrell, William J., Jr., mayor, city of Paterson, prepared statement of 302

Page

Letters, statements, etc., submitted for the record by—Continued
Rael, Lawrence, chief administrative officer, city of Albuquerque, prepared statement of 632
Rasey, Dr. Keith, director of Federal Government relations, Greater Cleveland Growth Association, prepared statement of 104
Red, James, union steward, American Federation of Government Employees, Local 4041, prepared statement of 673
Rendell, Edward G., mayor of Philadelphia, PA, prepared statement of 41
Riggs, Lawrence, president, Services Group of America, prepared statement of 461
Rolfe, Christopher, vice president of organization effectiveness, Duke Power Co., prepared statement of 833
Rose, Joe, Concord Coalition, prepared statement of 709
Schiff, Hon. Steven, a Representative in Congress from the State of New Mexico, prepared statement of 589
Schundler, Bret, mayor, city of Jersey City, prepared statement of 288
Seward, Barbara, member, Bernalillo County Commission, prepared statement of 638
Sommers, Paul, executive director, northwest policy center, University of Washington, prepared statement of 413
Stoker, Michael, chairman, California Agricultural Labor Relations Board, prepared statement of 523
Strunk, Steve, chief administrative officer, Boatmen's Sunwest, Inc., prepared statement of 659
Sustar, Roger, president and owner, Fredon Corp., prepared statement of 218
Sweeney, Frank, vice president and controller, ITT Avionics, prepared statement of 354
Treffinger, James W., county executive, Essex County, prepared statement of 294
Vander Ark, Thomas J., superintendent, Federal Way School District, prepared statement of 409
White, Wendell, city manager, Charlotte, NC, prepared statement of 769
Whitman, Christine Todd, Governor, State of New Jersey, prepared statement of 341
Whitmire, Daniel, township trustee, Austinburg Township, OH, prepared statement of 126
Wilson, Heather, secretary, Children, Youth and Families, State of New Mexico, prepared statement of 604
Zimmerman, Richard, president, Washington Performance Partnership, prepared statement of 423

CREATING A 21ST CENTURY GOVERNMENT

FRIDAY, JULY 14, 1995

HOUSE OF REPRESENTATIVES,
COMMITTEE ON GOVERNMENT REFORM AND OVERSIGHT,
Parma Heights, OH.

The committee met, pursuant to notice, at 10:06 a.m., in the Greenbrier Theatre, 6200 Pearl Road, Parma Heights, OH, Hon. William F. Clinger, Jr. (chairman of the committee) presiding.

Present: Representatives Clinger, Schiff, Zeliff, Horn, McIntosh, Flanagan, LaTourette, Sanford, C. Collins.

Also present: Representative Stokes.

Staff present: Jim Clarke, staff director; Kristine Simmons and Monty Tripp, professional staff members; and Judith McCoy, chief clerk.

Mr. CLINGER. The Committee on Government Reform and Oversight will come to order.

First of all, I want to welcome everybody to this hearing with the full Committee on Government Reform and Oversight. It is our first hearing on what we call creating a 21st century government.

VOICE. We cannot hear you back here.

Mr. CLINGER. OK. How is that?

VOICE. That is fine.

Mr. CLINGER. OK. Again, I will welcome everybody here for what is our first hearing in a series of hearings we intend to hold around the country soliciting the views and suggestions for how we can make government work better, work more smoothly and work more efficiently. Our overall goal is to fashion a government that will be adequate for the 21st century.

Before I go any further, I want to thank a distinguished member of this committee and this area's Representative in the Congress, Steve LaTourette, for hosting the committee today. And also to thank his staff and all of you for putting up a lot of hard work to ensure the success of this hearing today.

Steve, I believe you would like to introduce our host.

Mr. LATOURETTE. I would, and I thank you, Mr. Chairman. I want to begin by welcoming you and the other members of the committee to northeastern Ohio and Cleveland. I do not want to sound too parochial, but I think that you have made an excellent choice for the first field hearing as this committee determines ways to restructure the Federal Government to make it more responsive and less intrusive and less expensive to operate.

I want to also chime in and add my thanks to Mayor Paul Cassidy and the city of Parma Heights and his service director, Joe Tal for their cooperation.

At this time, I would like to introduce Mayor Cassidy and invite him to issue words of welcome on behalf of the city. [Applause.]

Mr. CASSIDY. Wisely, the Chair informed me that I was allowed 30 seconds. [Laughter.]

Welcome to Parma Heights, OH, U.S.A. We are very pleased, very proud to have you here to conduct these hearings. When I was a boy, they used to say Congress does not run, it waltzes. I have changed it now that Congress does not run, it travels.

In the past, we have had school boards and hospital boards and all sorts of agencies of government come and conduct their meetings and their hearings in a setting like this, but this is the first time ever that we have had the Congress come to us instead of us needing to go to the Congress. I think it is great on behalf of the people of the city of Parma Heights, and more than that, on behalf of the people of this part of Ohio, I want to thank you and tell you if there is anything we can do to make your day here both productive and comfortable, we will certainly do it.

Thank you for being here. [Applause.]

Mr. CLINGER. Thank you very, very much, Mayor Cassidy. We look forward to spending the day in your fine city.

I also want to acknowledge the presence today of the dean of the Ohio delegation, Representative Stokes, who is joining us here and we are grateful to have his attendance at this initial hearing.

This morning, we are going to hear from a number of distinguished witnesses, all, I think, with insight and experience in creating a leaner, more efficient and more effective organization from businesses or governments that were less than lean and mean. Our hope is that we can learn from these witnesses and then apply those lessons to our efforts in Washington to ensure that we have a Federal Government that is ready to serve this Nation today and into the next century.

Our efforts at the Federal level go beyond streamlining executive departments and agencies. We are engaged in a radical restructuring of our institution that will take us into the 21st century. We need to step back from the Federal Government we have today and ask the questions that business and local and State leaders have been asking of their own organizations; is this organization designed to meet our needs today and in the year 2000 and beyond, or is it left over from the days before microwave ovens and color TV?

It is critical that we refocus government on those essential functions that it must perform and consider whether government should be involved in any activity if it cannot do it well. In fact, in our quest to do things better, it seems all we have done is make the Federal Government bigger. Look at the chart over on the far left there. In 1985, you can see from the chart, there were 1,013 Federal domestic programs; today, there are 1,390 programs administered by 53 separate agencies. To support these programs and the bureaucracy that runs them, Federal income tax receipts today have grown to an amount 13 times the amount they were in 1960. Today, it takes nearly 3 times as many days of work, 126, to pay off all Federal, State and local taxes as compared with the 44 days required to pay them off in 1930. The Cost of Government Day chart up there is the day on which the American taxpayer finally

paid off his or her share of the financial burden of government, including all State and Federal spending and regulatory costs, and that date this year was July 9th, just a few days ago, and obviously more than halfway through the year.

The problem in my view, and others', is that the Federal Government is no longer responsive to the people it is intended to serve. We have all heard or experienced the horror stories of wading through reams of inefficient, unhelpful government red tape. It seems that government today is just too big and is trying to do too many things to do them all well. So it seems to us that it is long overdue for a top to bottom review and renovation.

Our task is to review the size, scope and functions of the Federal Government. Our goal is to improve government activity where it is necessary, refocus government efforts where they are misdirected, and get government out of the activities in which it does not belong. And the only way to reach this goal is with the input and support of the American people, which brings us to Parma Heights. We are, after all, creating their 21st century government. And to me, that means a government that is limited and responsive. A government that is the solution to problems rather than the source; a government that can adapt as the needs of its citizens change; and a government where change is not the dark unknown but a welcome and constant force that continues to push America toward a promising future.

The witnesses before us today already have met the challenge of preparing their organizations for the future. I think we have much to learn from their experiences and the process by which they arrived at some very, very difficult decisions. It is my hope that the lessons we learn here will translate in some respects to our efforts to "smart size" the Federal Government so we can benefit from their innovative ideas without reinventing the wheel.

With that, allow me again to thank our witnesses, our audience and our colleagues who have taken time—we have a large turnout of members of the Government Reform and Oversight Committee. I am grateful to them for taking time to attend this hearing and to listen and reflect on what our witnesses and the people of northeastern Ohio have to say. Thank you.

I would like now to recognize a very distinguished gentlelady from the great State and city of Chicago, IL, the ranking member of the Government Reform and Oversight Committee, Mrs. Cardiss Collins.

[The prepared statement of Hon. William F. Clinger, Jr. follows:]

STATEMENT OF THE
HONORABLE WILLIAM F. CLINGER, Jr.
CHAIRMAN
HOUSE COMMITTEE ON GOVERNMENT REFORM AND OVERSIGHT
Hearing on "Creating a 21st Century Government"
Parma Heights, Ohio
July 14, 1995

Good morning, and thank you all for coming to the Government Reform and Oversight Committee's first hearing on what we call "creating a 21st Century Government." Before I go any further, I would like to thank a distinguished Member of this Committee and this area's Congressman, Steve LaTourette, for hosting the Committee today and for the work he and his staff have devoted to the hearing's success. I would also like to acknowledge the Dean of the Ohio Delegation, Representative Stokes, who is joining us here.

This morning we will hear from a number of distinguished witnesses, all with insight and experience in creating a leaner, more efficient, and more effective organization from businesses or governments that were less than "lean and mean". Our hope is that we can learn from these witnesses and then apply those lessons to our efforts in Washington to ensure that we have a Federal Government

that is ready to serve this nation today and into the next century.

Our efforts at the Federal level go beyond streamlining executive departments and agencies. We are engaged in a *radical restructuring of our institutions* that will take us into the 21st century. We need to step back from the Federal Government we have today and ask the question that businesses and local and State leaders have been asking of their own organizations: Is this organization designed to meet our needs today, in the year 2000, and beyond or is it left over from the days before microwave ovens and color TV?

It is critical that we refocus Government on those essential functions that it must perform, and reconsider whether Government should be involved in any activity if it cannot do it well. In fact, in our quest to do things better, it seems all we have done is make the Federal Government bigger. (CHART) In 1985 there were 1,013 federal domestic assistance programs. Today, there are 1,390 programs administered by 53 agencies. To support these programs and the bureaucracy that runs them, federal income tax receipts today have grown to an amount 13 times the amount they were in 1960. (CHART)

Today, it takes nearly three times as many days of work - 126 - to pay off all federal, state and local taxes as compared with the 44 days required to pay them off in 1930. The "Cost of Government Day" (CHART) - the day on which the American taxpayer finally paid off his or her share of the financial burden of government, including all state and federal spending and regulatory costs - was July 9th in 1995, just a few days ago and more than halfway through the year.

The problem in my view is that the Federal Government is no longer responsive to the people it is intended to serve. We have all heard or experienced the "horror stories" of wading through reams of inefficient, unhelpful government red tape. It seems that Government today is just too big, and is doing too many things, to do them all well. It is long overdue for a top-to-bottom renovation.

Our task is to review the size, scope and functions of the Federal Government. Our goal is to improve government activity where it is necessary, refocus government efforts where they are misdirected, and get government out of activities in which it does not belong. And the only way to reach this goal is with the input and support of the

American people. We are, after all, creating their 21st Century Government. To me, that means...

- a government that is limited and responsive;
- a government that is the solution to problems rather than the source;
- a government that can adapt as the needs of its citizens change; and
- a government where change is not the dark unknown, but a welcome and constant force that continues to push America toward a promising future.

The witnesses before us today already have met the challenge of preparing their organizations for the future. I think we have much to learn from their experiences and the process by which they arrived at some very difficult decisions. It is my hope that the lessons we learn here will translate in some respects to our efforts to "smart size" the Federal Government, so we can benefit from their innovative ideas without reinventing the wheel.

With that, allow me again to thank our witnesses, our audience,

and my colleagues who have taken the time to attend this hearing and to listen to what our witnesses and the people of northeastern Ohio have to say.

Thank you, and I would like to recognize the Government Reform and Oversight Committee's Ranking Member, Representative Collins, for an opening statement.

Mrs. COLLINS. Thank you very much, Mr. Chairman. I certainly commend your leadership in convening the first of a series of full committee field hearings to address the general issue of governmental reorganization and the matter of creating a 21st century government. The timing of this hearing is very important as the reorganization of the Federal Government is well underway in the Congress.

As the ranking Democratic member of this committee, I share your interest in laying a sound and fair hearing record with regard to how and what our government should look like. The reorganization of government will touch the lives of every American. Our input is critical to the social, economic and physical well-being of this country. However, it will remain our responsibility to ensure that the U.S. Government is fully capable of carrying out agency mandates and administering laws.

As we hear from the citizens of Ohio, I hope that we will keep in mind that in Washington, Congress is grappling with the political strategy designed to liquidate, exterminate, consolidate and privatize the Commerce, Education and Energy Departments. Unfortunately, symbolism is fueling the move to reduce the size of government with little regard for our poorest and most vulnerable citizens. I am deeply concerned that these hearings may be for all intents and purposes fundamentally immaterial; that in light of the underlying goals set by the Republican leadership, the future of these agencies is a foregone conclusion. Now the leadership's headlong rush to carry out the Contract With America and terminate vital and important Federal agencies comes at the expense of saving money, ensuring greater agency accountability and enforcing laws designed to protect our health, our safety and the environment. Crafting a leaner, meaner government has been shoved aside and in its place is a rush to block grant Federal money and transfer Federal problems to the States.

The reorganization debate and activity takes place in the midst of Republican plans to cut $270 billion from Medicare and provide a $245 billion tax break for the most affluent in our country. Is this the way to reorganize the government? I know there are seniors in my district who will never be fooled into thinking we will be better off with $270 billion in Medicare cuts. I do think that my constituents, and perhaps yours, would at least feel better if Medicare cuts were being driven by genuine health care reform instead of a politically motivated approach.

I am deeply disturbed too that the Department of Education is on the consolidation block. The mission of the Department of Education is to ensure equal access to education and to promote educational excellence throughout the Nation and has never been more important than it is in today's high tech and highly competitive global economy. Our ability to prepare American citizens, and especially our children, to meet challenges of this new age is critical to our economic prosperity, our national security and our civic life. With a dwindling manufacturing base and the loss of production jobs in low wage economics, it is clear to me that our only hope to rescue our economy is to raise the educational achievement of all of our youth.

The Department of Commerce slated for liquidation is another agency that really works. Under its umbrella, the National Weather Service uses the most advanced technology to save lives and property by alerting us to weather patterns, tornadoes, thunderstorms, hurricanes, flooding and the like.

Another well known Commerce Department program is the Economic Development Administration, which uses minimal Federal resources to attract private capital to economically distressed rural as well as urban communities. Also under the Department of Commerce, the Advanced Technology Program has given awards to Ohio companies like BP Chemicals, U.S. Biochemical Corporation and Ohio Aerospace Institute to perform essential research which brings long-term growth and new jobs to this State. Dr. Keith Rasey of Greater Cleveland Growth Association is going to testify, I believe, to specific programs that benefit the Cleveland community. By Cleveland community, I mean the Cleveland metropolitan community which includes Parma.

In closing, let me make the point that reorganization must make government more streamlined, more accountable and more competent. Competent government is not only a worthy goal but quite literally a necessity if the United States is to remain a preeminent power in the 21st century. I look forward to today's testimony. Let me take this opportunity to thank my very good friend and colleague, Congressman Louis Stokes for the invaluable support he has provided.

With that, I welcome the panelists, as you do, Mr. Chairman.

Mr. CLINGER. I thank the gentlelady very much. We have a fairly busy day and many witnesses to hear from this morning. I would hope that members might—who have opening statements might consider having them submitted for the record. They will be included in full in the record. If anybody feels however a need to speak at this point, I would recognize them. If not—oh, I am sorry. Let me recognize—indeed, we should recognize the dean of the delegation and our good friend who has represented this city—the city of Cleveland—so admirably well for so many years, Congressman Stokes.

Mr. STOKES. Thank you very much, Mr. Chairman and to the ranking minority member, Mrs. Cardiss Collins and members of the committee.

It is indeed a real pleasure and honor for me to have been invited this morning to sit in with your committee. As a member of the Appropriations Committee, I do not often get this opportunity to sit on the authorizing side of the House. Let me say what a pleasure it is to join my colleague, Steve LaTourette, in whose district we are sitting this morning. On behalf of our entire northeastern delegation, I take pleasure in welcoming all of you to our county and to the hearings that you are participating in today. I think this is a very valuable exercise in what democracy is about, to bring the Congress to the people, and you are to be commended for that type of leadership, Mr. Chairman and Mrs. Collins. I want to say to all of you that it is indeed an honor for me to participate and to welcome each of the witnesses here this morning.

I am particularly proud to see Lynn Martin, who is one of our former colleagues in the Congress. One of the most respected Mem-

bers of the Congress and, of course, a former cabinet member. It is a pleasure to see her here this morning also.

Thank you very much, Mr. Chairman.

Mr. CLINGER. Mrs. Collins, do you have another comment?

Mrs. COLLINS. Yes. I want to hasten to say as well that I am delighted to see Lynn Martin. You know Mr. Chairman, Lynn and I were the only two women in the Illinois delegation for a number of years. As Members of Congress there are some parallels in our lives, one which is kind of interesting. We shared the only two license plates at the time in the State that said U.S. Congresswoman, the rest said U.S. Congressman and so forth and so on. Every time we had to change license plates, everybody all over the universe would ask us to send them our old plates.

Second, we are both avid interior designers, for me, I use the word very, very loosely. She is very accomplished and at that juncture, that is where we part altogether. [Laughter.]

She, of course, left the Congress and went on to become Secretary of Labor for the U.S. Government and then after she left that wonderful assignment—leaving me behind in Congress to chair a little small subcommittee—went on to Chicago to the University of Illinois where she is doing professorial duties at this point in time, and she is still my very good friend. I do not envy you at all Lynn, and I know you do not envy me. One thing about it, our friendship has lasted through all of these changes in our lives and I am glad to see you.

Mr. CLINGER. Thank the gentlelady.

If there are no other opening statements at this point, I would like to join in welcoming our panel this morning. Already alluded to is our good friend, Lynn Martin, who was our colleague for many years. We miss her. She was a great asset and a great contribution to the House of Representatives and we are delighted to have her here because she has done a lot of thinking and has a lot of good ideas in the area that we are considering.

I would also like to welcome my very good friend and fellow Pennsylvanian, the outstanding mayor of the great city of Brotherly Love, Philadelphia, Edward Rendell, who has been a superb leader for that city and has done some very exciting and interesting things to bring that city back from very dire straits. Ed, you deserve a lot of credit for the great work that you have done there.

Ken Blackwell. We are very honored to have the treasurer of the State of Ohio with us this morning. He has an outstanding record of service to the public in academia, domestic and foreign affairs issues, and we know that he has much to offer on the role of governing America based on his experiences as a former mayor of Cincinnati. As I said, he is the current treasurer for the State of Ohio and we are very pleased and honored to have you with us, Treasurer Blackwell.

We hope that before the panel is concluded that we will also be joined by Mayor Michael White of Cleveland who is en route. We hope he got the right instructions on how to get here. We anticipate that he will be arriving either during this panel or perhaps at the conclusion.

With that, we thank you all for being here, taking time out of your busy schedules and coming from some distance to be here and

we look forward to hearing from you. I guess I would ask, Lynn, if you want to lead off.

STATEMENTS OF LYNN MARTIN, FORMER SECRETARY, U.S. DEPARTMENT OF LABOR, ACCOMPANIED BY ELIZABETH BARON; MICHAEL WHITE, MAYOR OF CLEVELAND; EDWARD G. RENDELL, MAYOR OF PHILADELPHIA, PA; AND J. KENNETH BLACKWELL, TREASURER, STATE OF OHIO

Ms. MARTIN. Thank you very much. Thank you for your kind greetings. I am honored to be here, Mr. Chairman. And, Congressman LaTourette, let me tell you, your staff has been extraordinarily helpful, too. And to be joined by two Chicagoans, a friend that I get to correct. I teach at—I went to the University of Illinois of which I am very proud, but I do teach at the Kellogg School of Management. The mayor and I are fighting about whether a Kellogg or Wharton is No. 1 while we sit here. So that is the one correction. And I will tell you that Congressman Flanagan represents the district where I grew up.

Mrs. COLLINS. I stand corrected but Northwestern is my alma mater, so we are still on the same team.

Ms. MARTIN. Why this is important, I must tell the audience that she is going to come and address the class and I would hate her to go to the University of Illinois. We could wait a long time for her to show up.

Mr. SCHIFF. Mr. Chairman, I do not mean to interrupt the witness, but many of us who now live in the west, including myself in New Mexico, are also graduates from the University of Illinois. [Laughter.]

Ms. MARTIN. This is dangerous territory with Ohio and Ohio State to talk of the U of I, so I will switch to other important areas.

As important as this incredible community is and the welcome, my statements are directed to the more national issues that would not just affect this particular community and I am glad that you allow me to do this.

In the last 7 months, I know all of you have felt that you and Members of, not just your committee, but the Congress have worked around the clock to pass important, and in my view, long overdue legislation. But from where I sit as a former cabinet secretary and now as a teacher of graduate business students and as an advisor to companies seeking ways to remain leaders in tomorrow's world, your efforts on regulatory reform, the line item veto and on unfunded mandates, just to pick out a few, are critical and necessary steps that government had to take to ensure America is ready to move successfully into the 21st century.

Today's hearing, Creating a 21st Century Government, in my view is a subject that is long overdue. For too many years, we have maintained blindly outdated and ineffective programs and policies that were well meaning, but were not working. They may have had their day, but we cannot close our eyes to the fact that a large part of today's government was designed for an America and for a world that has passed into history. Change has all too often meant review at the margin, with little effort put forward to examine the effectiveness or appropriateness of core structure and approaches.

As we move into the second millennia, with all the challenges, opportunity, excitement, and yes, uncertainty and fear that this can present, Americans cannot afford the luxury of having a government that routinely is satisfied with the status quo, and I, and I am sure others today will say, had America's private sector been equally satisfied with the status quo when it confronted waves of global competition and technological change in the 1980's, America would not be the competitive leader it is today. Now it is the government's turn to do its part.

That means, Mr. Chairman, and members of the committee, before we spend a lot of time, energy and resources asking if we have efficient government, we must first examine the underlying assumptions of our policies and programs. Is the Federal Government, rather than the private sector or State and local government the best provider of a service or benefit? A well-built road to nowhere, after all, is still a dead end no matter how elegant the engineering.

Part of the transformation that has helped the private sector become more competitive in recent years has been an increased willingness to move outside traditional boxes. But we should not kid ourselves, such change has not been easy or without cost. People and institutions have much invested intellectually, emotionally and financially in the status quo. But the segmentation of the global market, as well as the market here in the United States, into distinct cultural, economic and demographic units has forced businesses to examine and rethink basic structures and assumptions. Those who have, define tomorrow. Those who are not, increasingly find themselves out of the game. Government must do the same.

Of course, I welcome the mayor. It is lovely to have him join our panel—the mayor of Cleveland.

The Federal Government's approach to work force education and retraining is but one example of regrettably a well-built road to nowhere, and I say this with great regret.

Our hopes not withstanding—and I know it is popular in some circles these days to see Federal worker retraining programs as an easy answer to welfare dependency, technological change and foreign competition. The evidence now of 30-plus years of Federal programs demonstrate too little and sometimes no relationship between money spent by the Federal Government and results achieved. In fact, the history in the last 30 years in one of the programs after training and education have been sustained is that the programs often exist for their bureaucracies rather than for the people they were entrusted to serve.

The Federal Government today spends somewhere between $15 billion and $20 billion each year on workplace training. And I do not blame everyone who applies for the grants and for putting them out there. That is not the point here. We spend $20 billion to retrain people, but does anyone on this panel or in this audience truly believe that the difference between success and failure in the system will be found in a debate over whether the budget goes up or down 5 percent or 10 percent or even 20 percent? I do not think there is a single person in America who can name all the different Federal programs devoted to work force training. I know I cannot.

The bureaucratic maze aside, and I do not mean to diminish the confusion the average American confronts when forced to deal with this and most other government systems. It is absolutely true that a nationally directed, one-size fits all approach to work force training was designed for a time when job creations was in mega-corporations. But today, job creation is occurring in small and medium-size businesses. Women-owned businesses employ more Americans than the Fortune 500. And the unity of our labor market is broken down into many highly unique geographic segments. All this changed, but the Federal Government's retraining and education model has remained the same.

The tragedy is two-fold. As we read news story after news story, taxpayers continue to feel—to fund training for jobs that may not even exist anymore. And more important, the men and women that make a commitment to improve their own lives conclude the system cares more about the people who run the schools and are a part of the bureaucracy rather than those who are truly trying to make do and make a better life.

As I reflect upon this and other Federal policies and programs, I believe we must focus on results and stop maintaining huge legal and bureaucratic structures that are devoted entirely to process. Process only becomes important when we lose sight of a program's mandate and mission. The system that requires complex and costly mechanisms to ensure that the process occurs eventually defines the program, not the mission. Innovation, creativity, flexibility, the core values of the 21st century have little place in a process-driven system. The best reason to fund any program is it produces meaningful results. The worst reason to stop funding a program is that it fails to follow the rules from Washington.

Having said this, I do not believe that States and localities have all the answers. Many of the bureaucracies at the State and local levels are not always allies to change either. In too many urban areas, young people who need alternatives so they can have a chance at this changing work force are put through the same no-win cycle that may give them a graduation certificate but little ability to find real work. And while there are State programs that are effective, some programs are superior to others. Even your Block-Grant proposals, there must be some way to be sure that efforts get replicated that work, the programs are examined in a timely way and that they evolve and change. I would point to you the Ford Foundation is now—it has been of a relatively short-time duration—is giving awards, and they are meeting right now, for the most outstanding replicable Federal, State and local programs that meet goals of mission rather than process. And I would give to the committee the thought they might want to get those prize winners from the last 5 years to see what has worked.

Government has a lot to learn from businesses about diversity, a word that has become over-used and unpopular but is incredibly important in our life. An increasing part of the private sector sees the retention and advancement of minorities and women as a business imperative. I work with a firm, Deloitte and Touche and its CEO to chair a council of outside advisors to see how this firm progressed. He did not get there because of a government mandate or

directive. The reason Deloitte and other firms are doing this is because they believe having the best people will mean success.

Government-imposed affirmative action programs have given people a start; now they must reflect a search for excellence. We must be able to say to all Americans that minorities and women are part of the excellence of this country. No longer must their incidence in the work force be viewed as an aberration or because it is some Federal policy. Women and minorities are critical to our future as a global leader. Their skills and abilities are desperately needed in the work force.

But we must recognize that the model of government support for work force diversity must be updated to reflect the reality. The threat of the Federal club often stands in the way of an open dialog. As this committee looks at Federal programs and policies on diversity, I would urge you to look creatively at approaches that encourage rather than discourage businesses from doing not just what is right, but what is smart.

I am teaching graduate business students at Northwestern—it is only part of the story, they are actually teaching me—about the exciting and innovative changes occurring in leading companies. And so, instead of as a cabinet secretary that wants to wander on forever increasing your age and mine, I thought it would be possible to have one of the outstanding graduates briefly say some of the innovative things—in other words, start listening to the next generation. This is Elizabeth Baron. Like my children, all of my students are excellent. That is a bias that one is allowed as both a mother and professor. But I also believe that this next generation is not going to be feared but welcomed with their ability to change. And may I introduce to you Ms. Elizabeth Baron, a current graduate and soon to be working within the health care, private system at one of our Nation's leading drug firms.

[The prepared statement of Ms. Martin follows:]

Statement of the Honorable Lynn Martin

House Committee on Government Reform and Oversight

July 14, 1995

Good morning Mr. Chairman and members of the Committee. I appreciate the opportunity to appear before you today and to be here with Mayor Rendell and our host state's treasurer, Ken Blackwell.

I know, Mr. Chairman, that the last seven months have probably felt like a lifetime as you and members of this committee have worked around the clock to pass important and long overdue legislation. But from where I sit as a former Cabinet Secretary and now as a teacher of graduate business students and as an advisor to companies seeking ways to remain leaders in tomorrow's world, your efforts on regulatory reform, the line-item veto, and unfunded mandates, just to name a few of your accomplishments this Congress, are among the critical and necessary steps government must take to ensure America is ready to move successfully into the 21st century global economy.

The thrust of today's hearing, "Creating a 21st Century Government, in my view, is a subject that is long overdue. For too many years we have blindly maintained many outdated and ineffective programs and policies. These may have had their day. But we can not close our eyes to the fact that a large part of today's government was designed for an America and a world that has long past into history. Change has all too often meant review at the margins, with little effort put forward to examine the effectiveness or appropriateness of core structures and approaches.

As we move into the second millennia, with all the challenges, opportunity, excitment, and, yes, uncertainty this presents, America can not afford the luxury of having a government that routinely is satisfied with the status quo. As I, and I'm sure others will discuss today, had America's private sector been equally satisfied with the status quo when it confronted waves of global competition and technological change in the 1980s, America would not be the competitive leader we are today. Now it's government's turn to do its part.

That means, Mr. Chairman, before we spend a lot of time, energy, and resources asking if we have an efficient government, we must first examine the underlying assumptions of our policies and programs. Is the Federal Government, rather than the private sector or state and local government, the best provider of a service or a benefit? A well-built road to nowhere, afterall, is still a dead end no matter how elegant its engineering.

Part of the transformation that has helped the private sector become more competitive in recent years has been an increased willingness to move outside of traditional boxes. But we shouldn't kid ourselves. Such change has not been easy. People and institutions have much invested -- intellectually, emotionally, and financially -- in the status quo. But the segmentation of the global market, as well as the market here in the U.S., into distinct cultural, economic, and demographic units, has forced business to examine and rethink basic assumptions. Those who have are defining tomorrow. Those who have not are increasingly finding themselves out of the game.

The Federal Government's approach to workforce education and retraining is but one example of a well-built road to nowhere.

Our hopes not withstanding -- and I know it is popular in some circles these days to see federal worker retraining programs as the easy answer to welfare dependency, technological change, and foreign competition -- the evidence of thirty plus years of federal programs demonstrates little if any relationship between money spent by the federal government and results achieved. In fact, the history of the last thirty years is one of program after training and education program being sustained more for the needs of their bureaucracies than for the people they were created to serve.

The Federal Government spends today somewhere between $15 to $20 billion each year on workplace training and education, depending on how you count the programs. But does anybody truly believe the difference between success and failure in this system will be found in a debate over whether the budget goes up or down by five, ten, even twenty percent? I don't think there is a single person in America who could name all the different federal programs devoted to workforce training and education. I know I can't.

Page Three

This bureaucratic maze aside, and I don't mean to diminish the confusion the average American confronts when forced to deal with this system, a nationally-directed, one-size fits all, approach to workforce training was designed for a time when job creation in America was in our mega-corporations. But today, job creation is occurring in small and medium-sized companies. Women-owned businesses employ more Americans than the entire Fortune 500. And the unity of our labor market has broken down into many highly unique geographic segments. All this change, but the federal government's retraining and education model has remained the same.

The tragedy is two-fold. As we read in news story after news story, taxpayers continue to fund training for jobs that do not exist. And, most important, the men and women who make a commitment to improve their own lives conclude that the system cares more about the people who run the schools and are part of the bureaucracy rather than the those trying for a second chance at life.

My view as I reflect upon this and many other federal policies and programs is that we must focus primarily on results and stop maintaining huge legal and bureaucratic structures devoted largely to process. Process only becomes important when we lose sight of a program's mission. The system then requires complex and costly mechanisms to ensure that the process occurs as designed. Innovation, creativity, and flexibility -- the core values in the 21st Century economy -- have little place a process-driven system. The best reason to fund any program is that it is producing meaningful results. The worst reason to stop funding a program is that it fails to follow the rules line-by-line as dictated by Washington.

Having said this, it is not that I believe that states and localities have all the answers. Many of the bureaucracies at the state and local level are not always allies to change. In too many urban areas, the young people who most need alternatives so that they can have a chance in this changing workforce are put through the same no-win cycles that may occasionally give them graduation certificates, but little ability to find meaningful work. And while there are state programs that are effective, some programs are obviously superior to others. Even under the Block-Grant proposals, there must be some way to be sure that effective efforts get replicated, programs are examined in a timely way, and that they evolve and change just the way American business must.

Government also has much too learn from businesses which are successfully managing the diversity that is part of America's changing workforce. An increasing part of the private sector sees the retention and advancement of minorities and women as a "business imperative".

That is how Mike Cook, the CEO of Deloitte & Touche described his firm's women's initiative when he asked me to chair a council of outside advisors to oversee the Firm's progress. He and others like him didn't reach the conclusion that the full use of all America's talented men and women was both right and smart because of government mandates or directives. They know where they want to go and they are committed to success and to their people.

Government-imposed affirmative action programs may well have given people a start; now they must also reflect the search for excellence. We must be able to say to the American people, and this is my belief, that minorities and women are part of the excellence that is this country. No longer must their incidence in the workforce be viewed either as an aberration or the result of some federal policy. Women and minorities are critical to America's future as a global leader. Their skills and abilities are desperately needed in the workforce and must be viewed in this light.

But we must also recognize that the model of government support for workforce diversity today must be updated to reflect the reality that most businesses are not in conflict with government on the goals of full and equal opportunity in the workplace. The threat of the federal club all too often stands in the way of an open dialogue within companies. As this Committee looks at federal programs and policies on workforce diversity, I would urge you to look creatively at approaches that encourage rather than discourage business from doing what is right and smart.

I mentioned earlier that I'm teaching graduate business students. That reference is only part of the story. They are also teaching me much about many of the most exciting and innovative changes occurring in our leading companies. So when I was asked to appear today, I thought this Committee could benefit as I have by hearing from one of my best students. Like my children, all of my students, of course, are very good. But Elizabeth Baron is one of the best.

Page Five

The government for the 21st Century that we are discussing today is one of the most important legacies we will leave to Elizabeth and her generation. This Committee does the nation and future Americans a great service by challenging the popular assumption that just because something was done yesterday it is what we should do tomorrow.

Elizabeth.

Questions for the Honorable Lynn Martin

1) In our restructuring efforts, focusing on each agency's mission will become an important component in deciphering which programs are truly essential and whether these programs produce the desired results. How can we determine whether a program fits the needs and mission of a department into the 21st Century?

2) In your testimony you express your dissatisfaction with the number of federal government workforce and training programs. Can you provide some examples of this duplication and overlap? One example in my mind is the Job Training Partnership Program. A Department of Labor Inspector General report recently concluded that the program is not as effective as it could be because it does not address some of the underlying causes of unemployment, like illiteracy or lack of transportation to work. Do you have any suggestions as to how to restructure the federal training programs to make them more effective but less costly?

3) What is your position on the elimination of each of the following federal departments: Commerce, Education, Energy, and Housing and Urban Development?

4) As Secretary of Labor, did you attempt to restructure your department? If so, did you encounter barriers, and what were they?

5) Do you believe the Federal Government can spend less money and do a better job by targeting Federal grants-in-aid to the areas that need them most, as opposed to scattering money across the country? For instance, should we more carefully target job training assistance to areas with higher unemployment?

Responses to Committee Questions from Lynn Martin

#1. I would apply several criteria to this determination. First, assuming a program's mission should take priority over other programs, is the program achieving its intended results? For example, is a training program enabling participants to get and better keep jobs than they would have if they didn't go through the training program? This is a straightforward quantitative judgment that should be applied to existing and proposed programs. The measure is not the training in and of itself, but the reason a person goes for training.

Second, is the federal government the best provider of a service or manager of a program? Does a one-size, fits all approach, which after all is what we mostly get from federal programs, and the added bureaucratic level of the federal system prevent a program from achieving more positive results? I'm often amused that critics of block grants argue that this approach will create fifty states bureaucracies. Well, we have these bureaucracies already. Block grants, if structured appropriately, will merely eliminate the federal level.

#2. Governments, at all levels, not just the federal government, spend tens of billions of dollars on retaining. The issue is how to best spend this money.

There are three overall areas where government involvement makes sense: Worker displacement; second chance needs; and public-private vocational linkages.

My view is that the government is far too involved structurally in each of these three areas. I would like to see a system, particularly as applied to displaced workers and second chance students, that encourages students to take greater responsibility for their retraining. I would emphasize loans over grants. As I discussed in other places, I would not let the providers off the hook. Poor results should prevent them from staying in the business. The financing system I suggested should be as direct to the student as possible. If we start building in criteria such as geography, based on unemployment or other economic measures, we will include people in these areas who don't need government assistance, while excluding people who are low-income but reside in areas otherwise better off.

#3. My view on these agencies is largely a generalized position. We now have multiple agencies dealing with commerce and trade, to take just one example. Do we need all these bureaucracies, with overlapping overhead, confused responsibilities, and missions that cut across one another? I think not. In other areas, many federal agencies have grown in size and scope in the very years that the problems they are responsible to address have grown worse.

I don't believe, for example, that eliminating the Education Department will automatically solve the nation's education problems. But I do believe that these departments have taken on responsibilities that they are not equipped to handle, and they have sent a damaging signal to communities across the country that Washington has the answers to community-based problems in housing, education, economic development, and transportation needs. What these communities have largely received from Washington over the past thirty years has been federal mandates and micro-management that has done little to solve basic problems.

#4. Yes. In January of 1992, the Bush Administration proposed a reorganization of several DOL agencies, with an idea that the Department should be structured to reflect the real world of the 21st Century. We proposed the elimination of one agency which had a mission that was dated years before I came to the Department. We proposed in its place an agency that would look at 21st century workplace and workforce issues, both domestically and globally. We also proposed a consolidation of the Department's international functions into our existing international agency.

This proposal resulted from a year long effort by a Task Force of senior career and political appointees within DOL. The Deputy Secretary chaired the Task Force. The barrier we encountered was the Congress, which failed to act on our proposal, or even to give it any serious consideration as part of either its oversight or budgeting process.

#5. My view is that the best reform we can take to improve the effectiveness of government financed job training is to require that the training institutions have a more responsible role in the job placement of its students. We need to decertify institutions with poor job placements rates. And we need to hold back a portion of a student's tuition until students get and keep a job for at least 90 days. We need to do this whether the federal role is that of direct provider (e.g., Pell Grants), or money comes in the form of block grants to the states or other local governments.

Ms. BARON. Thank you, Secretary Martin. I just want to say I had the privilege of having this distinguished woman as a professor, as I went to Kellogg where we are very lucky to have her teach us some pointers.

I would like to say as a recent MBA graduate of the Kellogg School of Management at Northwestern University, I will soon reenter the work force as a marketing manager for Baxter Healthcare Corp., which I do not think is in anyone's district here today. At this time I will become again a taxpayer contributing part of my salary to the U.S. Government so that our society can better achieve shared goals and interests.

Experience in both the work force and business school has taught me that organizations which cultivate a competitive advantage succeed. This principle implies that firms should do only what they do best; that is, determine their core competencies and pursue endeavors which enhance them.

This, however, is not enough to ensure success, as maintenance of an industry leadership requires today's firms to become quality driven and customer focused. Moreover, quality implies continuous innovation and capital investment. Prosperous firms have maximized their limited capital resources by spending funds on projects which produce synergistic effects with their core competencies. Many of my fellow graduates from Kellogg are working for corporations which embrace these principles such as Proctor and Gamble, Motorola and Microsoft.

Proctor and Gamble serves as an example of a consumer packaged goods company which historically managed its business by creating new products and increasing prices across the board. Proctor and Gamble operated from a company-first perspective in enacting decisions. However, as competition increased, P&G and other firms like it realized that top products were no longer enough to sustain category leadership. Today's customers expect to derive value from products purchased. As a result, P&G shifted its strategy in the 1990's to place customers first and adopted a policy of value consciousness.

Operating under the policy of value consciousness, P&G now prices its products based on a price to value equation. A product's value is defined by the quality and service level returned to the customer. To maintain competitive, P&G either improved or eliminated product lines that were priced—that were not priced consistently with the value equation as consumers would purchase these products from other firms who did offer them value. Today, P&G continues to evaluate its products in order to maximize its capital investments and to increase customer loyalty.

Motorola provides another example of a firm's commitment to total customer satisfaction. An early pioneer in six sigma quality levels and just-in-time manufacturing, Motorola learned that total order quality drives customer repurchase intention. Thus, its continuous process improvement provides the foundation for ongoing success. Further, Motorola has reached beyond its own company walls to assist some of its suppliers with quality and process improvements. It understands that investments made with suppliers will ultimately affect the quality of Motorola's own products. Sup-

pliers' success translate into improved quality for Motorola and its customers.

Other examples of core competency successes are Microsoft and Federal Express. Both firms' trajectory growth patterns reflect that consumers reward innovation, not only in product but also in service levels. These leading corporations are the firms hiring my classmates because they have been successful by sustaining a competitive advantage which adapts to the changing consumer demand for their products. Moreover, these firms have utilized their available capital in a manner consistent with their core competencies to provide the best return on investment. The government should look to these companies as models for the future.

I would like to add some of my personal experience in the healthcare industry which also supports these principles. I worked for a pharmaceutical company which adapted in order to survive in a changed and ever-changing healthcare environment. Historically, pharmaceutical firms had competed in one of the most profitable industries, as individual firms had virtual monopoly power with respect to product pricing and policies. Increased competition among firms within the industry and expanded customer power caused firms to rethink their strategies. To remain competitive, my former firm divested from businesses not related to its inherent core competencies. Capital generated from divestiture provided funds to improve existing quality levels and further research efforts in the areas of its core competencies. Also, as a leaner organization, the firm became more customer focused and pursued endeavors which better maximized capital returns.

These principles were also embraced by the biotechnology company where I worked. The company routinely abandoned projects which could not generate additional profits if they did not meet core competency standards. Because capital and other resources were limited, decisions were made on the basis of which products created synergies with the firm's existing core competencies. The result of these efforts enabled the firm to have one of the shortest drug development times, significantly reducing costs and growing profits by lengthening products' saleable patient years. My future employer, Baxter, provides another example of a firm which reorganized itself to focus on its core competencies and serves as an innovative, service-oriented firm.

I am putting these examples before the committee because I believe it is possible to apply to government these key principles which drives successful firms. The government, like these firms needs to discover its core competencies. It needs to discover that quality in services creates value. The efficient use of resources, while not a politically correct concept for a bureaucrat who wants to manage ever larger budgets, is the best way to ensure our public and private sectors remain competitive. As a member of the future work force, I believe that a government which espouses these key principles enables the Nation to operate more efficiently. Only then will the United States be able to retain its position as a leader of all nations.

Thank you.

[The prepared statement of Ms. Baron follows:]

Remarks before the House Committee on Government Reform and Oversight

July 14, 1995

Elizabeth Baron

As a recent M.B.A. graduate of The Kellogg School of Management at Northwestern University, I will soon re-enter the workforce as a marketing manager for Baxter Healthcare Corporation. At this time, I will become again a tax-payer, contributing part of my salary to the United States' government so that our society can better achieve shared goals and interests.

Experience in both the workforce and business school has taught me that organizations which cultivate a competitive advantage succeed. This principal implies that firms should do only what they do best; that is, determine their core competencies and pursue endeavors which enhance them.

This, however, is not enough to ensure success, as maintenance of an industry leadership position requires today's firms to become quality driven and customer focused. Moreover, quality implies continuous innovation and capital investment. Prosperous firms have maximized their limited capital resources by spending funds on projects which produce synergistic effects with their core competencies. Many of my fellow graduates from Kellogg are working for corporations which embrace these principals such as Proctor and Gamble, Motorola, and Microsoft.

Proctor and Gamble serves as an example of a consumer packaged goods company which historically managed its business by creating new products and increasing prices across the board Proctor and Gamble operated from a company first perspective in enacting decisions. As competition increased, P&G and other firms realized that top products were no longer enough to sustain category leadership. Today's customers expect to derive value from products purchased. As a result Proctor and Gamble shifted its strategy in the 90s to place customers first and adopted a policy of value consciousness.

Operating under the policy of value consciousness, P&G now prices its products based on a price to value equation. A product's value is defined by the quality and service level returned to the consumer. To maintain competitive, P&G either improved or eliminated product lines that were not priced consistently with the value equation as consumers would purchase these products from firms who offered value. Today, P&G continues to evaluate its products in order maximize its capital investments and to increase consumer loyalty.

Motorola provides an example of a firm's commitment to total customer satisfaction. An early pioneer in six sigma quality levels and just in time manufacturing, Motorola learned that total order quality drives customer repurchase intention. Thus, its continuous process improvement provides the foundation for ongoing success. Further, Motorola has reached beyond its own company walls to assist some of its suppliers with quality and process improvements. It understands that investments made with suppliers will ultimately affect the quality of Motorola's products. Suppliers' successes translate into improved quality for Motorola's customers.

Other examples of core competency successes are Microsoft and Federal Express; both firms trajectory growth pattern reflects that consumers reward innovation, not only in product, but also, in service levels. These leading corporations are the firms hiring my classmates because they have been successful by sustaining a competitive advantage which adapts to the changing consumer demand for their products. Moreover, these firms have utilized their available capital in a manner consistent with their core competencies to provide the best return on investment. The government should look to these companies as models for the future.

I would like to add some of my personal experience in the healthcare industry which also supports these principals. I worked for a pharmaceutical company which adapted in order to survive in a changed health-care environment. Historically, pharmaceutical firms had competed in one of the most profitable industries as individual firms had virtual monopoly power with respect to product pricing and policies. Increased competition among firms within the industry and expanded customer power caused firms to re-think their strategies. To remain competitive, my former firm divested from businesses not related to its inherent core competencies. Capital generated from divesture provided funds to improve existing quality levels and further research efforts in areas of its core competencies. Also, as a leaner organization, the firm became more customer focused and pursued endeavors which maximized capital returns.

These principals were also embraced by the biotechnology company where I worked. The company routinely abandoned projects which could generate additional profits if they did not meet core competency standards. Because capital and other resources were limited, decisions were made on the basis of which projects created synergies with the firm's existing core competencies. The result of these efforts enabled the firm to have one of the shortest drug development times, significantly reducing costs and growing profits by lengthening products' saleable patten years. My future employer, Baxter, provides another example of a firm which reorganized itself to focus on its core competencies and serves an example of a highly successful and innovative service oriented firm.

I am putting these examples before the Committee because I believe it is possible to apply to government these key principals which drive successful firms. The government, like these firms, needs to discover its core competencies. It needs to discover that quality in services creates value. The efficient use of resources, while not a politically correct concept for a bureaucrat who wants to manage ever larger budgets, is the best was to ensure our public and private sectors remain competitive. As a member of the workforce, I believe that a government which espouses these key principals enables the nation to operate more efficiently. Only then will the United States be able to retain its position as a leader of all nations.

Mr. CLINGER. Thank you, Elizabeth, and thank you, Lynn for your very helpful contributions to our hearing.

I am pleased also at this point to welcome to the panel, Mayor White. We are very grateful that you could spare time from what I know is a very busy schedule to be with us today. And to acknowledge that you have done a really superb job in revitalizing a city that had serious problems, and in which, I think, you have taken a very active role in turning those problems around and used competition to make services better throughout the city. So we are really grateful that you could be here.

Lou, do you want to say a word of welcome?

Mr. STOKES. Thank you, Mr. Chairman. I would be delighted to take just a moment in the same way Steve LaTourette took such great pride in introducing Mayor Paul Cassidy, who is mayor of one of the cities in his congressional district this morning. I am equally proud to recognize and to welcome on this panel, Mayor Michael White, who is mayor of the city of Cleveland in my congressional district and one of the major and great cities of the United States. It is under his leadership that Cleveland is now getting national prominence, and national recognition in light of the outstanding success of his first 4 years in office. He is now in his second term and Cleveland is being recognized as the renaissance city of the Nation, and we are just delighted to have Mayor White here this morning.

Thank you, Mr. Chairman.

Mr. CLINGER. Thank you, Lou.

Mayor, you can go ahead. You can summarize or read or whatever. The floor is yours.

Mr. WHITE. First of all, Mr. Chairman, I would like to thank you for the very kind remarks on behalf of our city. We are truly proud to have you here and to have your subcommittee here today. We are very, very pleased that you would take the time to come to our community.

I want to also thank Congressman Stokes for the kind remarks for our community and for the things we have tried to do. One thing, Mr. Chairman, the Congressman did not say was that at the tender age of 23, I ran a congressional campaign for the Congressman many years ago and I look upon those days very fondly, and clearly just to be a small part of what he has been able to do in the Congress is a delight for me.

I want to say to Congressman LaTourette how pleased I am to be in his district. I have had the opportunity to meet with him on a number of issues pertaining to our regional shared concerns, especially in the area of the airport.

And if I could just take a small moment, I want to welcome my colleague from Philadelphia, Mayor Ed Rendell. I do not think there is any better person to talk about the kinds of issues that are before your committee today than Mayor Rendell. He clearly is a leader in the area of governmental reform and much of what we are trying to do in Cleveland is based on many of his successes.

To my colleague of this outstanding community, Mayor Cassidy, I just want to thank him for the kind words and the kind way in which he has allowed us to be here today.

Mr. Chairman and members of the committee, as I have already welcomed you, let me welcome you again to my hometown, Cleveland, OH. Thank you for this opportunity to testify before the House Committee on Government Reform and Oversight.

Today, we talk a lot about reinventing government. The big picture is all about change, changing and reform, reforming government thoroughly. But in reality, the challenge for us all is not just to balance our budgets but to be more innovative and creative in the delivery of basic services to our citizens who are really and truly our customers. People have shown that they are tired of taxes and tired of government not spending their money the way we would spend our own. I have watched what is going on around the country, the cities that have refused to accept that change is inevitable; change in the way we deliver services; change in the way we operate and change in the way we treat the most important commodity to a government and that is the citizen. That evolution is always occurring for us and for corporate organizations as well. Cities that have accepted this service-delivery process, never asking the hard questions, never challenging individual bureaucrats, never looking for ways to deliver a better product at a better price are in trouble. Cleveland, the city that I have the proud and prideful ability to be the mayor of, had 939,000 residents when I was a child living in the confines of its borders in the 1950's. Today, some 40 years later, there are some 505,000 customers living in the same space.

There are a bundle of problems and situations which we have created for ourselves. The 400,000 people in Cleveland, 1 million people in Chicago, and the list goes on, all decided to have a choice and they left. We in government too many times believe that our citizens do not have a choice, but in many ways and in many times they do have choices. Those people in Chicago and those in Cleveland made a choice to leave our community. They left for a better quality of life; a better bundle of services and they are no longer living in the communities in which they initially worked.

I would suggest that one of the things that cities have to do is to embrace the notion of competition. City hall and city halls across this country have to understand that we must either compete or we will die. When I became mayor of the city of Cleveland in 1990, I said to all of our employees, managers and line individuals alike, that I reject the notion that we cannot compete with our neighbors across our border. We can cut the grass in our parks; we can maintain our facilities; we can provide safety services equal to or greater than many of our suburban neighbors. The most important part of this process is to first believe. And I believe that we are showing, whether it is keeping the streets clean, getting the snow up or providing better park services or a myriad of other services, that we can compete. And when we do compete, people by and large want to be engaged and involved and live in our city.

This city, just a few years ago, was a city that people ran from. Just 5 weeks ago, a brand new study at Cleveland State University indicated that there are 20,000 people outside the borders of our city who wish to move back into the city of Cleveland. We have today one of the greatest building booms of new homes that this city has seen since the Korean war. For every home we build, there

are two people who want to buy it. And this city has seen since 1990, as Congressman Stokes knows, a 300 percent increase in our housing rehabilitation rates. City hall, we believe, is a place that has to understand the competition or die routine. Whether you are a corporation like IBM, Xerox or a city like Cleveland, Hartford or Los Angeles, we must realize that we have to be competitive. Competitive in the way that we deliver our services, competitive in the way we look at our quality of life.

There is nothing anti-government, anti-American about competition. Big cities like Cleveland can compete and we can win and we are doing it today. It means that we, both Democrats and Republicans, have to think differently, act differently and govern differently with a citizen philosophy as customer at the base of what we do.

I come to you today in line and lockstep with men and women I respect across this country who manage their cities and recognize that as long as cities are not providing the very best service they can and are not adopting new technologies and are not organized for success, then we are not doing what is right for our citizens or for our communities. There is a direct correlation between the operation of local government and the quality of life in those communities. One of my greatest challenges, Mr. Chairman, is to try to convince all of our employees, the ditch diggers, to the individuals who work on our computers, all the way up to our cabinet level members, that everything we do while we are on the job speaks directly and affects our quality of life. The more thoughtful we are, the smarter we work, the harder we work will mean real dividends in terms of the future of our community.

We have sought and have embarked on a new effort in Cleveland called Cleveland Competes. We have done this because we know the challenges for government are difficult and the issue is not just raising taxes. No matter how much success we as a community have had in the last 5½ years, the caliber of the day and the call of the day for change is loud and clear. Change or die we are told. This is why Cleveland Competes was born. Cleveland Competes is more than just privatization. It really has many parts.

First of all, it speaks to new technologies. The embracing of technology and government should be the call of the day. The second is reorganization. In order to provide a service, you have to have not only good managers but a system designed to deliver qualitative products. In the area of technology, we are one of the largest cities in the country to have out-sourced its payroll system, saving $2 million in the first year in hardware costs and over $600,000 in employee costs in the first year.

Just 3 months ago, Mr. Chairman, I was close to this community trying out a brand new chuckhole machine, which probably does not have much sway for Members of the Congress, but to people like Mayor Rendell and I, it means a lot. When I became mayor, you found anywhere from 8 to 12 people on the back of a chuckhole machine. Not only were there too many people on the back of it, but after you filled the chuckhole and the temperature went down and rose again, the chuckhole popped out, as Mayor Cassidy knows all too well. So every single year, those 8 to 12 to 15 people filling those chuckholes came back to the very same streets, the very

same chuckholes and filled the very same hole again. They did it because we could not afford to repave every street in Cleveland. We have gone to new technology. Simplistically, it is called the power patcher, a brand new form of technology that allows two people to work on that truck, the chuckholes do not come out. In 5 years we will have a fleet, and in 15 years we will have a rotating chuckhole program that will take care of every chuckhole in the city of Cleveland at less cost.

Reorganization is key to what we are all about. In 1992 after we had tightened our belts as far as we could tighten it, we were concerned that we still were not delivering the quality or the quantity of products and services that we should for the cost that the city was paying. We began to look behind the problem, to look behind the door, and we found very clearly what was at the rudimentary of the problem that we faced. That in order to deliver a sound, quality product at the local level, we believe there are three things that are imperative. No. 1; you have to have good management. Management is critical. Our management is good and we believe it is getting better. No. 2; you have to have good employees. And I will say to you, Mr. Chairman, our employees are good, 98 percent of them will do whatever we ask and they try to give us the best day's job every day.

The last part of this equation though is critically important, and that is that the system has to match the challenge. We found we had good managers, we had great employees, but we were in many, many areas doing the same thing the same way we were doing it 30, 40 or even 50 years ago.

Think about all of the examples you have heard today, corporation after corporation, look at the House of Representatives, the U.S. Senate, look at any organization you want and you will not find one organization that continues to delver service the same way it did 20, 30 or 40 years ago. So yes, you have to have good employees; yes, you have to have good management, but you must also have good systems as well. This movement of competition and government streamlining is not a rejection of public employees. By and large, public employees are outstanding individuals caught up too many times in a bad system in a bad place trying to overcome all kinds of obstacles to deliver a good service.

Third is the concept of competitive bidding. Some do call it privatization but we call it competition. At the base that Cleveland competes there is one fundamental philosophy, we ought to spend our citizens' money the way we spend our money. And in reality, Mr. Chairman, unfortunately, we in government too many times do not spend the public's money the way we would spend our own. In government, we do not spend our citizens' money the way we should or the way we can. In government, we have services where we spend 10, 20 or even 30 percent more for the money than others pay. Outdated methods, outdated contracts, bad personnel contracts are all causes that make us spend more than we should of your money in services from street sweeping to asphalt laying to a myriad of other services.

Let me try to point up a very simplistic reality in our community. And I would suggest to you, Mr. Chairman, that we are not much different than any other major city. The poorest people in Cuya-

hoga County consistently on a day-in and day-out basis pay more per capita for service—for increment of service than their more well-to-do counterparts outside their borders. That is an economic atrocity when the poorest people in the community pay the most for public services. We must change, we must evolve, we must adapt if we are to truly keep peace and pace with the world around us.

Already we do have evidence of how the Cleveland Competes concepts have improved the lives of Cleveland families. The Metro Health—McCafferty Health Center public/private partnership is an outstanding case in point. Just a few years ago, the city's McCafferty Health Center located on Lorain Avenue was in deplorable condition, physically and medically. The facility had not been maintained for many years, but more distressing was the reality that the services being offered by the Center to the families, adults and children of this near west side community were woefully inadequate. In August 1992, the city of Cleveland struck a landmark partnership agreement with the Metro Health Medical Center. Through this forerunner of the Cleveland Competes philosophy, we began to see tremendous improvements in our ability to serve those in need of medical services. Pediatric visits to the Center alone increased from 3,028 in 1991 to 13,278 visits in 1994, an overwhelming increase of 249 percent. Additionally, the total number of patient visits to McCafferty Health Center increased from 11,170 visits in 1991 to 25,092 visits in 1994. This outstanding increase of 125 percent is the product of our collaborative effort. Today, three of the city's four health centers have joined into public/private partnership with Metro Health. Further, the city of Cleveland through Cleveland Competes reached an agreement with Local Union 47 to provide custodial services to Cleveland Public Power. It is one of three key competitive projects that we have now shown that when our employees wish to compete, they can and they many times will win.

In 1994, the city of Cleveland opened a brand new headquarters for its public property power company. At that time, it was decided that we needed to go outside for custodial help. Usually, we would go to Local 47, hire individuals and put them on the payroll and go forward. We decided to bid this project competitively. We received six bids, including one from Local 47. Today, as I sit here, that building is being cleaned because Local 47 won that bid and they are operating in our building. Just recently, we took bids for emptying the receptacles in downtown Cleveland. We took four individual bids, including a bid from 1099. Mr. Chairman, 1099 won that bid and today and next year, we will save $600,000 in that area of waste reduction. I might also add that we intend to take the savings and buy two brand new EMS vehicles to provide much needed medical care in our neighborhoods.

Cleveland Competes continues to seek innovative and creative ways by which to provide our citizens with improved services at more effective costs. Services such as waste collection and street resurfacing can be improved by competitive bidding. This is not theory, this is reality. It is working in Philadelphia, it is working in Cleveland and many other cities across the country.

I have come here today to say to this committee that for Cleveland and all big cities across the country there is no going back. The public has said rightfully that we ought to spend their money the way we spend our own. The public does want and deserves a better product at a better price and they do not want politicians like us to raise their taxes as an automatic knee jerk reaction. I might add, Mr. Chairman, this city has not had its income tax increased in the 6 years that I have been here. There is nothing wrong with trying to keep cost down and providing a better product. There is nothing unAmerican about that at all. In fact, there is something very right about what we are trying to do. I come to you today to challenge each and every one of you to look beyond the rhetoric of change and reform and to understand that within our hands is the ability to build new cities and better ways of making our neighborhoods better places to live for our citizens.

Thank you. [Applause.]

Mr. CLINGER. Thank you, Mayor, for your very thoughtful and constructive comments.

I would now like to turn to the architect of another success story in the city of Philadelphia. Again, I want to thank him for coming from Philadelphia to share his thoughts with us on reinventing government. Mayor Rendell.

Mr. RENDELL. Thank you, Mr. Chairman. I am pleased to be here. All of our State is proud of the leadership you have provided in the new Congress. I think it is a thoughtful, reasoned approach that takes into account the needs the Federal Government is faced with, while at the same time not forgetting about the individual citizens of our State. So, we appreciate all that you have done.

It is always difficult to follow Mayor White because he stated so eloquently and forcefully the case for change in government, the case for making government more effective for providing better services at less cost.

I want to tell you for a brief moment about what we have accomplished in Philadelphia. Where we were and where we are now as a frame of reference for the things that I am going to recommend that the Federal Government take a look at. And obviously Mayor White and I understand that not everything we do at a municipal level is applicable to the Federal Government, nor everything you do at the Federal level is applicable to us. But, I think there are basic lessons to be learned from what Mayor White, myself and many other mayors across America have done to make our governments more effective to save money and to produce better services. And those mayors are, as Mayor White said, Republicans, Democrats. They are mayors of large enormous size cities, to midsize and small cities. We are African American, Latino and white. We share only one common driving force and that is to get the most out of every precious dollar we have for our citizens. And I think, by and large, where cities used to be the epitome of wastefulness and even corruption in the 1970's and early 1980's, I think American cities—and I know there is danger in generalization, but American cities have bit the bullet and made tough decisions and been innovative and been creative.

The day that I took office in Philadelphia, some 3½ years ago, we were in horrible shape. We had one-quarter of a billion dollar

operating deficit due to grow in 3 years—if nothing happened, including a freeze on wages, due to grow to $1.4 billion in deficit on a $2.3 billion operating budget. Obviously, that would have thrown us into bankruptcy. It would have handicapped our ability to reach our economic potential. Little children in Philadelphia would have felt the effects of that for the next quarter of a century, and clearly that had to stop. But it was not our only problem. Our problem is—as Mike has said about the city of Cleveland—our problem is that in 1950, Philadelphia had 2.1 million citizens and when I took office, we had 1.6 million citizens. And worse still, we had lost 263,000 jobs, not people but jobs in the last 25 years. In the 7 years prior to my becoming mayor, we lost almost 100,000 jobs. We had lost approximately 30 percent of our tax base. And what our response had been as a city—and we were not alone in this—was to raise taxes. As the tax base and as people fled, the only way we could keep up was to raise taxes. In the 11 years prior to my becoming mayor, we raised taxes 19 times and these were not little taxes. They were our four basic taxes; real estate taxes, wage taxes, business taxes and sales tax. We had the highest wage tax in America and the highest business tax in America when I took office.

So, I understood very keenly that I had to balance that budget without resorting to raising taxes. If we raised taxes, we might have balanced the budget in the short-run, but the price we would have paid for it would have been enormous. It would have been enormous. And 3 or 4 or 5 years down the road because of the loss of our tax base, we would not have actually been generating any additional revenues, rather losing revenues. So it was a difficult, difficult task.

Our bond rating had reached junk bond status and literally city managers met every Monday to decide which outstanding bills the city could pay. It got so bad at one point that the vendor who supplied toilet paper to City Hall cutoff that service much to the delight of many of the citizens. [Laughter.]

But we were in deep trouble. [Laughter.]

When I took office, USA TODAY—the very day that I took office, USA TODAY described—that little box on the front mentioned that I was the 121st mayor in Philadelphia's history and said that I would inherit the worst municipal financial horror show in the country. Upon reading that, I almost drove right by the building where I was going to be sworn into office. We were in trouble and we needed swift and decisive action. We have taken that, and in various and sundry form, I will outline that.

Where we are today is in less than 18 months we balanced the budget. We have produced three surpluses, albeit small. Our first year of surplus was $3 million; the second year $15.5 million and this year, we will produce a $30 million surplus. Those surpluses have enabled us to enact the first cut in the city's wage tax since World War II, 50 years. It will enable us to cut our business privilege tax for the first time in a decade. [Applause.]

And those taxes—those tax cuts are not made for political popularity. Those tax cuts are made for economic survival of the city of Philadelphia. We now have—all three rating services have given us an investment grade in our credit rating. And most importantly, in

the year before I became mayor, we borrowed money on a 3-month basis. We borrowed tax and revenue—we sold tax and revenue anticipation notes. It cost us 24 percent in interest. We just sold those same notes for a 12-month period at 3.95 percent interest, meaning millions of dollars of savings to the people of the city of Philadelphia.

Now, we have also reversed the loss of jobs. In 1994, after 7 straight years of over 14,000 job loses per year, we gained 1,300 jobs, and in this year in the first quarter we have gained 7,000 jobs.

Services in the city, although not where I would like to see them have rebounded dramatically from prior levels. How did we do it? We did it in ways that I will outline. And as you begin this quest to study if things that we have done and what Cleveland has done can be applicable—and what the private sector has done can be applicable to the Federal Government; I understand—as a good and loyal Democrat and as a good and loyal American, I understand the concerns that Representative Collins voiced in her opening statement. But my message to all of you is that making government more effective, more productive, more efficient will not hurt citizens, it will help them. Because of the things that we have done, Representative Collins—because of those things, we have been able to open every branch library in the city of Philadelphia for 6 days a week so working people can take their kids to the library on Saturdays for the first time in the city's history. We have been able to—[applause.]

We have been able to open seven recreation centers that were closed, 12 swimming pools that were closed. We have been able to create organized sports leagues in areas of the city that never had them before, 21,000 kids are participating in organized sports leagues. We have been able to radically improve our district health centers. The waiting time used to be 2 months for ordinary things, it is now down to less than 2 weeks. We have been able to spend more money on children and youth. And after years and years of running out of money and being unable to service new clients, this year—at the end of this past fiscal year, we had more money than we needed. And every child who was abused, battered or abandoned in the city of Philadelphia was taken care of. We have been able to—with the help of the President's crime bill, we have been able to add 153 new police and we plan to add 800 more in the next 3 years. Now, it is true that the Congress and the President have given us money to help us do that, but you give us about $25,000 per officer for 3 years. It costs us $43,000 in salary and benefits for a starting officer. And after 3 years, we have to pick up the cost of doing that. In the next 5 years, we will pay out of our city budget $67 million to match the Federal moneys for the 800 new police officers in the crime bill. We have a police force of 6,100. So 800 is an enormous increase for the people of the city. Had we not done the things that we did, we would not have made the changes in libraries and recreation and children and youth, in family centers and in police that we have made.

So changing government, saving money can produce more money for the things that you care about and I care about and every member of this committee cares about. So, I think this is a very impor-

tant task and we should not look at it with fear. We should look at it with anticipation because it can free up money to do terrific things.

We got there by basically doing five general categories, and they are all outlined in my written testimony, so I will not go over too many of the specifics. But No. 1, we got there by making tough decisions—by making tough decisions. And in many instances—none of this stuff is black magic; none of this stuff is rocket science. In many instances, it is as clear as the nose on your face and savings that are important can be effectuated by having the fortitude to make those tough decisions. Mike White, I note with some feeling of companionship, got a lot of grief for taking on the strong police union in Cleveland to make necessary changes in the contract. I did so as well. We have four municipal unions—and I am not saying this as a badge of honor, but we had four municipal unions in Philadelphia; two uniformed and two non-uniform. I will be the first Democrat in the history of the city to run without the endorsement of any of the four municipal unions. I think they are missing the point. I think in the long-run, we have helped them very much, but they are angered because of some of the things through the negotiating process and the arbitration process that we had to do. But we had to make those tough decisions. We had no choice. We stepped on a ship that was five-sixths under water. So the first thing I would recommend to the Congress—and you really probably do not need us to tell you that—is you have got to have the intestinal fortitude to make tough decisions. If you do not, balancing this budget will not work and it surely will not work in a fair way that protects our citizens, the citizens of this country.

Second, you have to take that government and shake it, your government as well as ours. Mike talked about competition. Competition is important. One, because of privatization or competitive contracting. We do the exact same process as Cleveland. It can produce a better product for less money. We have contracted out 24 different services and we save almost $30 million a year annually by having contracted those out. But our two biggest savings occurred when the municipal workers actually won the contract. We saved almost $6 million a year because of a new proposal that the municipal work force, a specific local, put together in our water and sludge processing center; $6 million alone because competition forced both managers—because managers are privatized out of their jobs as well as workers. It caused our managers and our work force to get together and say how can we save money? How can we be more productive? How can we beat these outside guys? And no mayor who has gone through this process is happier than when word comes back that it is your own work force that won the competition. Instead of 24 and 2 in favor of the private sector, I would like to see that start reversing so it becomes 2 and 24, and I believe as we go on it will.

The best thing about contracting out is it has incentivized the work force. It has made them understand that we cannot have business as usual. We have to save money. We have got to be more productive. We have got to spend those taxpayer dollars in the best way we can. And now, we have dialog between managers and workers to try to figure out ways to do basic things, important things

to save money. Is that important? Absolutely. And I am sure you could tell me stories about the Federal Government—certainly Secretary Martin could from the executive level.

When I became mayor, I got my revenue department together because one of our big initiatives was to collect more taxes. I thought we were being beaten left and right on taxes and I thought it was a very fertile area, and I was right. In 3 years, by collecting taxes more effectively and more efficiently, and by raising user fees to the appropriate level necessary to enforce their jobs, we have produced $200 and—let me give you the exact number, $203 million in savings in 3 years by collecting taxes better; by raising user fees; by getting reimbursements that we are owed, the proper level of reimbursements from other governments. It has been a very effective thing.

When I met with my revenue department, they said, well, we can do better but we need a $5.3 million package in software to collect taxes better, particularly these business taxes against businesses operating in the city who did not even have licenses. And we eventually got them this software. But in the meantime, I did two little exercises with them. I said, one, do a computer run on all of the businesses located outside the city who do business in the city of Philadelphia who we give checks to, whether it is contractors or accounting firms or whatever, who we give checks to, do a computer run and see how many of them do not have business privilege licenses and do not pay taxes. You might be surprised, and you might not to find 17 percent of the people we were giving checks to did not have—who were outside the city, did not have business privilege licenses and were not paying any taxes—17 percent.

I also said to them, bring me the Philadelphia Yellow Pages, and they all looked at me like I was crazy. I said bring me the Yellow Pages. In Philadelphia, we have four suburban counties in southeastern Pennsylvania and three suburban south Jersey counties that form our metropolitan area. Each one of those seven counties has their own Yellow Pages. I said take any category, and someone yelled out hospital equipment. So, I went to hospital equipment and the fourth company listed was in Narberth, a suburb of Philadelphia. I said, this company is doing business in the city of Philadelphia. You do not have to do any computer run to find that. They have, with malice of a forethought, advertised in the Philadelphia Yellow Pages. It means they are doing business here. They did not advertise just in their own county, they advertised here. Go audit them—go audit them. Find out if they paid any taxes and then go audit them. A simple thing like that.

Now, why did our city work force not think of those things? Why did they sort of lay back and say we need this software or else we cannot do anything? It is because we have created with the civil service and in many cases with past practices in union contracts, we have created an incentiveless government. We have got to find a way to put incentive back in government. I would love to see a system in my city—and I am working on it in the next contract—and in the Federal Government where we give bonuses to individual Federal workers who are extremely productive. Where we give a percentage of cash savings of any cost savings suggestion that an employee comes up with. I would like to see a system like that.

We instituted something called the Productivity Bank. It is a small amount of money, $25 million out of our budget. And we make it available for loans to our own departments who do not have the money to do what they want to do. It does not qualify in the capital budget and it is too much for them to sustain in their operating budget. Like the revenue department, they could not take the $5.3 million out of their yearly operating budget, so we lent them the money with the Productivity Bank. And our rules are, they have got to pay it back with whatever the interest rate was at the time of the loan in 3 years. If they do not pay it back, it comes out of their budget in the final year. They have got to pay it back. After they pay it back, they can keep the savings for technology and equipment. I would love to have some of that savings go back in terms of bonuses, as well as technology and equipment, to the workers who came up with the idea in the first place. Again, we are working on that. But just allowing them to keep the savings to buy better technology or better equipment for their own department, it has revolutionized things. We have people sitting around in rooms figuring out how we can do things better. How we can be innovative. Let us get a Productivity Bank loan, let us do our job and then let us get things to change our department like never before. So incentivizing the government, I think is awfully important.

New structures are important. I do not think we should be afraid of new structures. Congresswoman Collins, I am a big supporter of HUD. I think what the Congress has done to our Community Development Block Grant Programs is wrong, wrong, wrong. CDBG is one of the most effective Federal programs we have, started by a Republican president, Richard Nixon. It should not be cut. In the palace of truth and justice, it should be increased. I came down to support Henry Cisneros' initiatives to restructure HUD. So, I do not think HUD should be eliminated by any means. But do we have too many programs and too many bureaucrats in HUD? Do we have things that are duplicative and that are wasting money? Of course we do. And Secretary Cisneros acknowledged that as well. Is a lot of our spending missing the mark? Should we convert to the voucher system that he is talking about? I think so. So, I do not think we can be afraid of restructuring and even merging or consolidation or elimination of departments. If the basic product that reaches the citizens in Oregon and Pennsylvania and Texas, if that basic product is still being delivered the same or in a better way, I do not think we should fear those type of things. So restructuring is important.

And last, I think we have to have new management procedures which make us accountable and measure what government does—and measure what government does. We did something—and I know the Kellogg people will tell you businesses do it all the time. We initiated a program called the City Manager's Report, where we require the city managers quarterly not only to tell us where they stand in their budgets. In the past, we did not find out how they were doing until the last month of the fiscal year and then it was too late to make mid-term corrections. We have also asked them to report to us clearly measurable standards of accountability. So for police, how many arrests are being made? Are they good arrests or are they being thrown out for bad searches and seizures? What is

our response time to calls, particularly priority one calls? Has our response time gotten better, has it gotten worse, has it stayed the same? How many kids are in PAL centers? Everything we do as a department, we try to get as subjective measuring sticks as we can and we try to hold our departments' feet to the fire. Not only to their budgets, but to performance, to actual quality of services that we put in.

We have done a lot of other things and I hope that you or the staff has a chance to read my written testimony. But it can be done. And again, we get a lot of credit that I do not think we deserve because other cities have been doing it. We get the credit because we inherited such a dire situation. I always think of what Senator John Fitzgerald Kennedy said when he was running for president and a little girl came up to him and said, Senator, how did you become a war hero, and Senator Kennedy replied it is simple, they sunk my boat. And that is in part true about us. We got all the attention because our boat was sinking and we had to do these things all at once. But other State governments, other city governments have done these things and I believe many of them are applicable to the Federal Government. I want every worker in the city of Philadelphia to be thinking about how to do a better job; how to save money for the taxpayers. As Mike said, we want them to understand that everything we do as a government has an impact to people who live in our neighborhoods. And the Federal Government, I believe, as big as it is, can do the same. [Applause.]

[The prepared statement of Mr. Rendell follows:]

MAYOR EDWARD G. RENDELL

Mr. Chairman, members of the House Committee on Government Reform and Oversight, and distinguished guests, I am delighted to have the opportunity to appear before you today. I love talking about the great City of Philadelphia and I believe that we do have some remarkable accomplishments to pass on that could be of benefit to others. For the past three and one-half years, my Administration has been on a mission to reorganize the executive branch of Philadelphia's outmoded government. We've been relentless and we've overcome seemingly insurmountable barriers -- and Philadelphia is now poised to enter the next century as one of America's greatest urban success stories.

Three and a half years ago, it was hard to imagine that I would be here today to present Philadelphia as an example of what works in government. In January of 1992, when I took office, Philadelphia faced the worst financial crisis in its history. We were a quarter of a billion dollars in debt -- a debt that would have grown to $1.4 billion by the end of June 1996 without corrective action. On the verge of bankruptcy, Philadelphia was virtually cut off from the major capital markets and was saddled with a "junk" bond rating, the lowest bond rating of any of the nation's major cities. So desperate was the City that, before I took office, senior City managers met each Monday to decide which bills the City could afford to pay. City and State magazine labeled Philadelphia the city that "sets the standard for fiscal distress in the 1990s."

This nightmare was not just a short-term financial crisis, but rather the culmination of a long-term decline in Philadelphia's fortunes. Like many other cities, Philadelphia's decline was painfully evident from its steep loss of population and living-wage jobs. Since reaching its peak in 1950, the City has lost over 23 percent of its population, dropping from 2,070,000 inhabitants in 1950 to 1,586,000 in 1990. The Census Bureau recently estimated that the City lost

an additional 33,000 residents between 1990 and 1992, more than any other city in the U.S. during that period. As would be expected, the City's employment base had also declined along with its population. Since 1969, the number of jobs in the City declined by 26 percent, from 938,600 to 692,400 as of January, 1992.

It was absolutely clear to me when I took office that any solution to our short-term financial crisis that worsened this decline would be a disaster. We could not afford to drive one more family or one more business out of the City. To me, that meant *no tax increases* and *no devastating service cuts*. Instead, from day one, my Administration took aggressive action to cut waste, improve management, productivity, and efficiency, and drive down the cost of government – to do more with less. We implemented major structural reforms to fundamentally change the way City government conducts its business.

So, three and a half years later, where are we now?

- We are projecting a $29.3 million surplus for the fiscal year that just ended this June 30. This will mark the third straight budget surplus in a row after seven straight years of deficits.

- All three major credit rating agencies have returned the City to an investment grade bond rating for the first time since September, 1990, significantly lowering the City's borrowing costs. Early this month, the City's improved credit ratings enabled us to sell 12-month Tax and Revenue Anticipation Notes without credit enhancement at a yield of just 3.95 percent. In comparison, during the depths of the fiscal crisis in January 1991, the City was forced to sell three-month notes with a yield of 24.00 percent.

- We have enacted the first cut in the City's onerous wage tax -- the highest in the nation -- in 50 years. We have also cut our major business tax in a deliberate effort to strengthen the bottom line of businesses that operate within Philadelphia. These reductions are part of a five-year gradual reduction in both taxes that come after 19 increases in major taxes in the 11 years preceding my Administration.

- The City gained 1,300 jobs during 1994 and is continuing to gain in 1995. This ended a brutal slide that saw the City lose over 85,000 jobs in slightly less than six years.

- More importantly, we have not just held the line on services, we have enhanced services. With the help of hundreds of volunteers, we cleaned up City Hall, we opened our pools all summer long, we added new sports leagues for thousands of kids, and we opened 32 libraries on Saturdays for the first time in years. We shortened the wait and improved services at our district health centers. We developed an effective new program of coordinated services to help the homeless and we added 400 police to the patrols on our streets.

How did we get from the nightmare of January 1992 to the promise of a renewed City prepared to prosper in the 21st Century? We got there by reducing the City's expenditures or increasing its revenues by a total of $736 million during my Administration's first three full fiscal years. We relied on the following three broad strategies to accomplish this feat:

- We raised an additional $203 million over our first three full fiscal years by cracking down on tax delinquents, charging user fees that reflect the true cost of providing certain municipal services, and more efficiently collecting reimbursements due to the City from other governments.

- We negotiated new agreements with all four municipal unions that saved the City $302 million over the last three fiscal years without materially affecting the quality of life for the average City employee.

- We generated management and productivity savings totalling $231 million over the last three years.

These management and productivity savings are what you have asked me here today to describe. For the balance of my remarks, I would like to explain some of my Administration's efforts to restructure the executive branch of Philadelphia's government.

When my Administration took office in January 1992, the City of Philadelphia was operating with management systems that were designed for a different era. The City's budget process, personnel system, contracting process, management hierarchy, and information systems were layered with unwieldy, bureaucratic practices that did not encourage innovative, effective management of limited resources. As a result, Philadelphia suffered from poor management, low productivity, and high taxes and spending. As the City's financial condition worsened over the last decade, those investments that were most critical to doing more with less -- investments in state of the art management systems, technology, facilities, and equipment -- were precisely the investments that were sacrificed to meet more immediate financial needs.

My first step, therefore, was to modernize the culture and structure of our City government. These efforts begin with the Mayor's Private Sector Task Force, which I assembled upon taking office. The Task Force's charge was to infuse City government with the innovation, accountability, and entrepreneurship of the private sector. The Task Force was composed of 41 local CEOs and approximately 300 loaned executives from 130 organizations, all chosen for their

professional knowledge and experience. Thanks to this tremendous commitment of volunteer resources, the Task Force thoroughly analyzed City operations and made specific recommendations for improving service quality, cutting costs, increasing revenues, and streamlining operations. From its inception in January of 1992 to the completion of its work in December 1993, the Task Force completed 17 management reviews of 26 departments and 7 Citywide issues. Most of the success stories that I will talk about next have their roots in this extraordinary public/private collaboration.

New Management Structures

One of the accomplishments of which I am most proud is the reorganization of four key governmental functions. You would think that, in a City with a $2.3 billion General Fund budget, there would be in place comprehensive systems for managing the City's fleet of cars and trucks, for controlling the City's exposure to financial risk, for minimizing energy-related costs, and for coordinating the City's information technology. Instead, when I took office, these functions were spread chaotically throughout City government. Today, structures are in place to handle each of these responsibilities. Even more importantly, each of these new structures will continue to improve the City's management and productivity far into the future.

Office of Fleet Management

I established the Office of Fleet Management in April 1993 by Executive Order to coordinate the maintenance, assignment, acquisition, utilization and repair of nearly 6,000 City vehicles dispersed over eight City departments. After we came into office, we learned that 90

percent of all City services required the use of vehicles. The City's fleet employed 550 people and cost $40 million per year to operate, but lacked any centralized source for determining the number of vehicles in the City's possession, much less the condition of those vehicles.

Through Fleet Management, we have made great strides in the critical areas of vehicle availability, preventive maintenance, and optimal fleet size and configuration. Fleet Management reduced downtime of City vehicles to 16 percent for the second quarter of FY95 -- as compared to 30 percent in the fourth quarter of FY93 -- putting more police cars, trash trucks, and ambulances on the street to deliver critical City services. During the same period, Fleet Management also slightly downsized the City's total fleet by about 500 vehicles to a total of approximately 6,000 vehicles. The combined effect of these two accomplishments was to increase the number of City vehicles in service at any given time by approximately 500 vehicles, while simultaneously reducing the number of vehicles out of service by about 1,000 vehicles.

With the help of a professional fleet management consultant, we have automated preventive maintenance through the Fleet Accounting Computer Tracking System, known as FACTS. FACTS provides a profile of each vehicle, and is used to track parts inventory, preventive maintenance schedules, vehicle availability, and shop performance. FACTS is expected to result in an estimated total savings of $3.9 million over the next five years. Further, Fleet Management has worked with individual departments to determine optimum fleet size and make-up to guide our purchases of new vehicles. Finally, Fleet Management has generated $2.5 million in new revenues from the auction of obsolete and underutilized equipment.

Thanks to Fleet Management, we now have the expertise and capacity to focus on the details of the City's vehicle use. We are benefiting from enhanced management tools such as

regular automotive technician training, improved bid specifications enabling the City to purchase a better vehicle for less, greater contract management efficiencies to reduce manufacturer markups, pre-trip inspection protocols for drivers, enhanced job qualifications and testing criteria for fleet personnel, and increased customer service. In short, we have the structural capacity to ensure a streamlined and efficient fleet system for Philadelphia.

Division of Risk Management

In February 1993, I issued an Executive Order creating the Division of Risk Management to reduce the City's exposure to claims and lawsuits and to reduce the frequency and cost of employee injuries. This move was absolutely critical to protect the City's assets. No private sector corporation even half the City's size could operate without a professional risk manager to evaluate contracts, purchase insurance or design a self-insurance program, and evaluate important liability issues. Yet, before February 1993, Philadelphia had no such program.

Risk Management centralizes and expands functions that were previously scattered throughout the various operating departments. The non-system that we had inherited was disorganized, decentralized, and mismanaged, resulting in a terrible record. With respect to claims and lawsuits, City indemnity payouts rose from $13.3 million in FY89 to $34.9 million in FY92, to $61.7 million in FY93 as the level of claims increased and as the City and the Court of Common Pleas began to clear out an aging backlog of cases. With respect to employee disability issues, for example, from 1986 to 1992, the total cost of the City's work injury programs almost doubled; in 1991 alone, the City awarded five times as many service connected disability pensions as it had awarded just 10 years earlier. In addition, temporarily disabled

employees were receiving an average 19 percent raise in their net pay for not returning to work, contributing to an estimated 83,000 lost work days in 1991.

To meet its goals, Risk Management works through four distinct units. The Employee Disability Unit oversees all aspects of the employee work-related disability program. The Safety and Loss Control Unit investigates and seeks to resolve safety issues, provides injury prevention training, and conducts studies to evaluate safety conditions throughout the City. The Risk Management Unit assists departments and agencies with insurance and self-insurance programs, approves all City contracts, advises City departments regarding liability issues, and monitors all construction projects funded by the City. Finally, the Claims Unit investigates and settles property damage and personal injury claims filed against the City.

Risk Management's results have been impressive. Through the implementation of a total comprehensive reform of this element of municipal government, the Philadelphia injury benefits system is coming under control, with total savings from disability reform estimated to approach $8.9 million in FY95. The use of injured-on-duty (IOD) leave taken by City employees has decreased by nearly 17 percent in the five departments with the highest historical usage of IOD time: IOD leave for the Police, Fire, Prisons, Streets, and Water departments was reduced from a total of 62,979 days in FY93 to 52,539 days in FY94. The number of service-connected pensions awarded has also dropped dramatically from 153 in FY92 to 45 in FY94. Philadelphia now has a professional staff that seeks to identify means of reducing injuries such as the purchase of ergonomically sound equipment and furniture to prevent back injuries and carpal tunnel syndrome. Our Claims Unit has instituted immediate initiatives to reduce the City's costs such as the mobilization of City claims adjusters in emergency situations, the aggressive investigation

and attempt to settle claims before a lawsuit is filed, and the collection of previously unrecovered hundreds of thousands of dollars in third party damages to City property.

Over the next few years, the primary focus of the Risk Management Division will be to continue to build on and institutionalize the systems that have been put into place since 1993. As these initiatives continue to evolve, Risk Management projects further savings and greater stability in both the City's disability system and indemnity budget.

Municipal Energy Office

The third new government structure is the Municipal Energy Office (MEO), which I established by Executive Order in July 1993 to lead and coordinate a Citywide effort to reduce energy usage and costs. Energy consumption was not so much a case of mismanagement as it was a total lack of management. My goal for the MEO was to reduce the City's energy expenses and consumption by at least 10 percent, for savings of at least $8.6 million from the City's yearly $86 million energy budget. In just over one year of operation, the MEO developed initiatives that are projected save the City a projected $16 million through 1999; the cost of operating the MEO amounts to only a small fraction of these savings. For example, in FY94, Philadelphia joined the U.S. Environmental Protection Agency's Green Lights Program to upgrade 12 million square feet of City facilities with new, energy-efficient lighting and reduce the City's energy bill by over $3 million annually. In another initiative, the MEO's Aladdin Project replaces older light bulbs with more energy-efficient bulbs to save a projected $415,000 in FY95. Through the development of new energy-efficiency standards for all new and renovated City facilities, and other cost-saving programs such as the replacement of traffic signals with light emitting diodes, MEO anticipates

that by the year 2000, the City's overall energy use will decline by 20 percent, while lighting use should drop by 30 to 35 percent.

Mayor's Office of Information Services

I created the Mayor's Office of Information Services (MOIS) in September 1993 to consolidate the City's information services under one office and one director. Prior to the creation of this Office, the City's information services were dispersed among various City departments, a situation that repeatedly led to poor choices of hardware and software, and duplication and lack of coordination among related departments. Now, however, we are developing a secure, networked, and state-of-the-art computer architecture maintained by skilled information systems professionals.

MOIS has radically changed the City's approach to information technology. In 1994, MOIS worked with City departments to develop the *City of Philadelphia Strategic Information Technology Plan 1994-2000* which provides a blueprint to guide the City's information technology investments into the next century. MOIS has also developed a City information technology budget that catalogues technology investments Citywide and assists in interdepartmental coordination, resource allocation, and priority-setting.

Now that we have established a clear direction, I have chosen to increase the percentage of the City's budget devoted to technology from 1.6 percent for FY94 to reach 2.5 percent by FY97. These investments will ultimately pay off handsomely in improved productivity throughout the City, just as they have in private industry. For example, by establishing Citywide standards for personal computer software and local area networks, MOIS expects to save a total

of more than $1.5 million over the next two years. MOIS has cut costs through the enhancement of databases already in production and the consolidation of datacenters for City agencies. By renegotiating hardware maintenance agreements, MOIS achieved another $110,000 in annual savings to the City. Contracting out technology-related activities that cannot effectively or efficiently be performed by in-house staff has also resulted in significant service improvements. Finally, increased computer training and software support for City employees at a renegotiated cost has resulted in an estimated $200,000 in annual savings to the City.

Most importantly, MOIS has enabled cooperation between departments to vastly improve the City's ability to carry out its responsibilities. MOIS is assisting in the development of a new integrated Criminal Justice Information System (CJIS) to be shared by the courts, District Attorney, police, and prisons systems. Before the CJIS, information on each suspect had to be entered four times into four different computer systems. By using a common file, the CJIS will eliminate wasteful duplication, make tracking a suspect's movement through the system much easier, facilitate more efficient pre-trial procedures and prison population management, and help witnesses, crime victims and the justice system as a whole. Further, MOIS collaborated in developing an integrated tax system for the Revenue Department that will track the payment of 17 taxes, give the City access to state and federal revenue computers, and enable better coordination between the Revenue Department and the Law Department's enforcement division. This system is projected to yield $21 million in additional revenues over the next five years. Finally, with the City Planning Commission and Streets Department, MOIS is developing a new Geographic Information System -- a sophisticated computerized map of the City. This system will be able to generate maps showing trash routes, water mains, abandoned housing, zoning

classifications, and water cutoffs. The City may save up to $4 million between FY95-FY99 due to improved routing of vehicles and supervisory communication made possible by this innovation.

New Management Practices

The consolidation of these four governmental functions reflects our desire to create a more efficient, productive public structure. Perhaps the greatest evidence of my Administration's commitment to revolutionary change, however, consists of three new management practices that we have implemented throughout City government: Competitive Contracting, the Productivity Bank, and the Department Service Delivery Report initiative. Each of these new management practices has contributed to the City's remarkable savings that I described earlier. The value of these tools extends far beyond savings, however. These new tools of management have greatly improved service levels in the City. And they have fundamentally changed the culture of our government from one of bureaucratic passivity to aggressive, entrepreneurial management of service-oriented operations.

Competitive Contracting

My Administration created the City's Competitive Contracting Program in April, 1992 to inject competition into the provision of City services. I see three primary benefits to this program. First, in every initiative so far, the City has obtained equal or better service at a lower price. Second, the Competitive Contracting Program requires City departments to compare the cost and quality of their services to analogous services provided by the private sector. Private competition creates a yardstick by which City managers and union employees can measure their

performance, providing the opportunity and the incentive for City managers to implement productivity measures. Third, Philadelphia has finally introduced competition into the delivery of basic City services. Increasing efficiency -- even in those departments or divisions where there is no pending contracting out initiative -- has been the inevitable result. The City's competitive contracting program is encouraging City managers and workers to become more entrepreneurial.

To date we have completed 26 competitive contracting initiatives with outside providers, generating an estimated total annual savings of $23.86 million as of May 10, 1995. Perhaps the most visible example of the improved service that results from contracting out is the new shine on Philadelphia's 92-year old City Hall. Now cleaned by a family-run, unionized maintenance firm, City Hall is cleaner than ever at a savings to the taxpayer of more than $300,000 a year. For another less visible but more lucrative example, the City is in the process of eliminating its warehouse for office supplies and replacing it with just-in-time delivery requirements for contractors, at a savings of $1.15 million annually. And the City has contracted out the responsibility for cutting nearly 1,000 acres of grass in Fairmount Park. This measure has reduced the average time between summer mowings from four weeks to two weeks at no additional cost, and permitted maintenance workers to attend to other Park tasks.

The purpose of competitive contracting is *not* to "privatize" City functions, but rather to lower the cost and improve the quality of City services. Before contracting out a service, City managers must perform a stringent economic analysis that identifies the true cost of the service. This economic analysis is provided to our City employee unions, and they are given the opportunity to develop and submit their own bid to keep the service in-house. Through this process, the City has saved an additional $8.2 million thanks to two initiatives where the functions

continue to be performed in-house by City workers at a lower cost. In fact, the single largest cost saving generated as a result of our competitive contracting program was an in-house restructuring of the Water Department's Sludge Processing Center. Regardless of the outcome, simply going through the rigorous process of conducting an economic analysis of their services benefits departmental operations.

I want to stress that when competitive contracting leads to a service being furnished by an outside provider, the City's dedication to providing acceptable services to the taxpayer does not end. Instead, the role of the City changes from provider to overseer, and my Administration has made a strong commitment to competent and vigilant contract management.

I also want to stress that a successful competitive contracting program does not have to come at the expense of hardworking municipal employees. The City has provided alternative employment for over 1,200 City workers displaced by competitive contracting initiatives through a new Redeployment Office in the Personnel Department. Moreover, fewer than one dozen employees have been laid-off as a result of the City's competitive contracting initiatives, and no worker has been involuntarily separated from City employment without first being offered an appropriate new employment opportunity through a "first hiring preference" with the new service provider and/or the City.

Productivity Bank

In August 1992, my Administration introduced a $20 million revolving loan fund, known as the Productivity Bank, to trigger key departmental initiatives -- projects that will generate long-term savings and revenues or significantly improve services. Along the way, the

Productivity Bank is intended to spark innovation in the way that City government conducts its business, improve the accountability of City managers, and introduce entrepreneurship in service to the public.

Eligible projects are those that cannot otherwise be funded from the City's capital budget or from a department's operating budget without endangering its normal service levels. Departments applying for loans must prepare an application which includes a project description, a project budget, and an analysis of how the project will either reduce City General Fund expenditures for delivering municipal services, increase City General Fund revenues, or lead to substantial increases in service levels even if financial paybacks are not readily quantifiable. Bank loans must be repaid in accordance with a repayment schedule that is set forth in a formal loan agreement signed by the department head and Bank officers. Departments are required to pay back to the Bank the loan principal plus 8.56 percent interest.

To date, the Bank has approved 11 loans to seven different departments for a total loan amount of $15.8 million. The City currently estimates that these loans will generate savings or revenues of approximately $51.2 million during the first five years of each loan; long-term benefits will be far greater. Even after repaying the original principal and interest to the Bank, participating City departments will net $26 million that can be used for improved services.

The success of this project goes well beyond dollars and cents, however. The Productivity Bank is playing a major role in upgrading the technological capabilities of City government, particularly in the development of advanced computer systems, the area that has received the vast majority of loan fund investments. For example, the Records Department received a $3.85 million loan to develop an advanced computer imaging system that reduced the

time required to complete title searches from 8-12 weeks to just one week. This improved service will allow the department to collect an additional $7.34 million in revenues by FY99, and will also result in $1.76 million in savings by allowing one employee to do the work previously performed by eight workers.

The Productivity Bank also loaned $1.28 million to the Police Department for the purchase of a computer photo-imaging system that can store up to one million mug-shots for immediate retrieval, as well as a bar-coded identification card system and evidence control module. This will assist in improving accountability at court check-in, and evidence inventory control, and is projected to save $2.64 million in personnel costs, overtime, materials and supplies during FY94-FY98.

Four Productivity Bank loans totalling $6.8 million to the Revenue Department are projected to produce extraordinary returns of $30.9 million in increased revenues. These loans will enable the department to automate its collection, billing, and enforcement capability; automate the selection of returns for audits; and link all City tax systems and federal and state databases.

These are just a few examples of what can be accomplished using this new management tool. As a revolving loan fund, the Productivity Bank is designed to be an ongoing part of City government. Repayments from many of the existing Productivity Bank loans are already well underway, with $4.9 million in repayments already completed and an additional $5.7 million of FY95 repayments awaiting the submission and passage of a year-end budget transfer ordinance.

Departmental Service Delivery Report

Ultimately, the true test of any government is the quality of the services that it provides to its citizens. When we evaluate the performance of any function of government, we must not simply measure how much was spent and how many employees were dedicated to the task. We must also measure what is really important to our citizens -- the level and quality of services provided. True accountability to the public cannot exist without this.

Until recently, however, neither I nor any previous Mayor of Philadelphia could tell you at any given time exactly what level or quality of services we were providing. The measurement of the quality of services had been confusing, incomplete, and in many areas, virtually non-existent.

With those concerns in mind, my Administration has developed what we call the Departmental Service Delivery Report to systematically track and evaluate the quality and quantity of City services being provided to the people of Philadelphia. This initiative enables City officials and the public to assess whether real progress is being made to upgrade City services within existing budgetary constraints.

Department by department, we are developing for the first time a comprehensive set of quantitative measurements of service levels and qualitative measurements of performance. The number of arrests made over a certain period of time is an example of a service level measurement for the Police Department; response times would be an example of a performance measurement. Other Police Department measurements that are currently being reported include response times in minutes for Priority One crimes, number and percent of officers in on-street bureaus, major crimes and arrests in thousands, clearance rates of crimes for which arrests have

been made, average hours taken from arrest to completion of processing, the number of police vehicle accidents, the number of children served by the Police Athletic League, and several personnel-related measurements. As you can see, these measurements and targets can give a pretty good idea of the performance of the Police Department to every one from the Commissioner to a citizen on the street. For all 33 agencies included in the most recent Departmental Service Delivery Report, there were a total of more than 150 measurements, each of which included quarterly and annual targets set forth in black and white.

The process of developing performance measures should, by its nature, be an ongoing one. It has the potential, in and of itself, to contribute greatly to the quality and quantity of City services. As City managers work to develop accurate means of measuring performance, they will also have the opportunity to re-evaluate their departments' fundamental mission. Moreover, they will be challenged to articulate key goals and objectives that fulfill that mission, and then to develop measurements that confirm whether or not the desired objectives are being achieved.

Control and Oversight

I would also like briefly to touch upon two coordinating mechanisms that my Administration created to oversee the initiatives I have described above, as well as literally hundreds of other steps, large and small, that have contributed to Philadelphia's renaissance. The first of these is the Initiative Compliance Committee (ICC), which is made up of the top City managers and which I established early in my tenure to monitor the City's progress in meeting its cost-saving, revenue-enhancing, and productivity-improvement goals. The ICC meets weekly

to discuss the City's financial and operational status, and to make policy decisions. In addition, the ICC meets with all departments on at least a quarterly basis to review their budgets and to address major operational issues. The guidance of the ICC has been critical to the success of the many accomplishments I have described.

Second, for day-to-day coordination of the implementation of the City's many management and productivity initiatives, in January 1992 I created the Office of Management and Productivity (OMP). OMP acts as a clearinghouse for new ideas, and champions management improvement projects that cross departmental boundaries. For example, OMP has played a key role in restructuring the four internal City functions I discussed early and continues to supervise the operations of Fleet Management and MEO. It runs the Productivity Bank, participates on the Competitive Contracting Committee, and works to create ongoing partnerships with the private sector through the Mayor's Management and Productivity Council, the successor of the Mayor's Private Sector Task Force.

Given the seriousness of the City's financial condition when I took office, we had no room for miscalculation or delay in implementing our reforms. The ICC and OMP played critical roles in working with each department to establish ambitious yet realistic targets for each initiative, and in assuring that those targets were achieved. This process continues today.

Conclusion

The hallmark of my Administration has been a refusal to appeal to outside sources such as the state and federal governments before first putting our own house in order. And I am

proud that we have done that. In just three and a half years, we have restored public confidence in our City's government by proving that government can work so long as we all work together.

But we are by no means out of the woods. For despite all this remarkable progress, the economic future of this City is still very much in doubt. Consider this: Last year was only the sixth in the last 26 that Philadelphia has not ended the year with a net loss of jobs. Between the 1970 and 1990 Censuses, the portion of our residents living in poverty rose from 15.2 percent to 20.3 percent.

I don't need to tell you that an eroding tax base combined with an increasing need for a wide array of life-sustaining services is a formula for long-term disaster. When I took office, I knew all too well that this formula had bequeathed Philadelphia a tax structure that was an albatross around the City's neck, choking Philadelphia's taxpayers and economic growth. It put the City at a competitive disadvantage, not only with its suburbs, but with other comparable cities as well. For example, a recent Wharton study placed the tax burdens of our four surrounding Pennsylvania counties at between 2.97 and 6.62 percent of a typical resident's annual income, while a Philadelphian staggers under a 12.15 percent burden.

Therefore, at the most fundamental level, two constraints must govern every strategic policy choice we make in the future. First, we must do nothing further to drive people and jobs from the City of Philadelphia. This means no further increases in tax rates and no further cuts in the services that the taxpayers value. Second, we must create opportunities for new job and neighborhood development by cutting the cost of doing business and living in Philadelphia while concurrently improving City services. I stress again: our strategy cannot succeed if it

lowers the quality of the City services that influence people's choices to leave or invest in our City.

The successes that I have described cannot be the end of the Philadelphia story. If City government is to contribute to Philadelphia's future competitiveness and strength, then government reorganization and economic revitalization must be an ongoing process. Identification of cost-cutting measures, stimulation of neighborhood enterprise and development, and cutting the cost of doing business, are only the beginning of a long, continuing battle for economic survival.

It's a battle we must all care about, regardless of where we live. In closing, let me share with you the words of National Journal co-founder, columnist, and author Neal Peirce:

> "Too often scorned, too often abused, cities are the heartbeat of what makes America America. For centuries, they have provided ladders of opportunity for each aspiring nationality and ethnic group that reached these shores. Their parks and river walks and public buildings, their boulevards and monuments, embody the vision and legacy of our forefathers. Cities are the nerve centers of America's commerce, its arts, its communications. Their neighborhoods, spread out in infinite design and character across this continent, are the fabric of our civilization.... Let there be no doubt: no cities, no civilization."

Ladies and gentlemen, I live and breathe the City of Philadelphia, and for me, these words ring true. As you endeavor to restructure the federal government, I ask you to keep these words in mind.

Thank you.

22

Questions for the Honorable Edward G. Rendell, Mayor of Philadelphia

1) Your testimony credits much of your success to extraordinary public/private collaboration. Do you think such collaboration is possible on the federal level? And more importantly, do you think federal restructuring can succeed without it?

2) It seems to me that you were able to turn Philadelphia's fortunes around in a surprisingly short period of time. How did you manage to "strike while the iron was hot," yet do it thoughtfully and without many mistakes?

3) Did your reforms cost money up-front, in order to achieve savings over the long term?

4) It sound like the success of Municipal Energy Office and the Office of Fleet Management, and of course the Office of Information Services, hinged on the use of technology. Please elaborate on the role technology has played in the city's successful restructuring efforts. Would your success be possible without it?

5) What is your position on the elimination of each of the following federal departments: Commerce, Education, Energy, and Housing and Urban Development?

6) Please comment on the proposed devolution of Federal programs down to states and localities.

7) Would you support an incentive/bonus program for federal workers who find ways to cut federal regulations efficiently?

8) Would you support a repeal or modification of Section 13(C) in mass transit programs that limits the ability to compete transit programs?

1. I strongly believe that restructuring of federal government must entail a public private collaboration. We found that it was vitally important to have people outside the government bureaucracy to come in and evaluate what changes were necessary to allow us to be more effective.

2. We did make our share of mistakes but, fortunately, they were minimal and although it is true that our turnaround occurred in a short period of time, I was formulating my ideas with a dedicated group of people for well over 18 months before I became mayor. Additionally, it should be noted that one of the reasons we were able to "strike while the iron is hot" was because there was overwhelming public support for making changes in the face of our problems. I can't overemphasize how important it is to be able to galvanize that level of support.

3. Some reforms did cost up-front money but in the 3 1/2 short years we have been on the job they have already paid us back with significant dividends. (See attached description of our productivity bank).

4. All three of the offices cited in your question depended significantly on technology to achieve the level of success they did. That technology could have been technological advances used to effectuate the reforms (e.g., the Office of Fleet Management used new computer technology to do street mapping which

allowed us to create more efficient trash collection pickup routes that saved millions of dollars overtime) or where new technology was directly used to achieve savings (e.g., Energy Office's Alladin Project which replaced all existing city light bulbs with new cheaper and more efficient ones).

5. I believe that of all four departments, it is absolutely essential to keep HUD and Education as separate entities. Their mission would be severely hampered without having specific advocates to advance it. They both should be significantly restructured, however, and Secretary Cisneros' recently announced plan is a very sound one. I do not know enough about the mission or work product of the Commerce and Energy Departments to appropriately comment.

6. Devolving federal programs down to the states and localities is basically a sound idea. Clearly increased flexibility at lower levels of government is extremely important. However, this devolution should not be used as an excuse for devoting less money to the substantive goals of the programs that are working (surely there can be significant reductions in administration by eliminating much of the federal bureaucracy). Nor should this be done without the imposition of some basic federal standards to ensure that the states and localities operate these programs in a way that achieves some of their basic goals. Lastly, it is very important that much of this block granting and devolution go directly to cities and counties as opposed to states.

Far too often states' distribution of block grants gives cities less funds than they deserve for political reasons. This can be avoided by devolving many programs (such as crime bill funding) directly to the localities.

7. Absolutely! Only incentives and/or bonuses can help us find effective ways to cut regulation, eliminate waste and save money.

8. We support streamlining the existing procedures under 13(C). Experience has taught us that the well meaning intentions to protect labors interest too often resulted in costly and unduly lengthy delays in the procurement of transit goods and services with no benefit to the public, to the transit authority, or to labor.

Mr. CLINGER. Mayor Rendell, thank you, for your excellent testimony and for the great success that you have had in the city of Philadelphia. It really is remarkable.

Treasurer Blackwell, again, we thank you for participating this morning. We are delighted to have you here and look forward to your testimony.

Mr. BLACKWELL. Thank you, Mr. Chairman.

Mr. Chairman and members of the committee, let me say how grateful I am for this opportunity to testify and how privileged I feel to serve on a panel with such exemplary public servants.

The views I share with you today are drawn from 25 years of experience in academia, government at all levels and business.

I come before you as a State-wide elected official and as the State's chief fiscal and investment officer. I briefly want to address the management revolution that has gone on in State government and the underlying conditions that have allowed, if not forced, the States to achieve huge productivity increases and improved services to the taxpaying citizens at a lower cost than ever thought possible. These changes have brought about an immensely positive transformation of State government. These conditions now apply to the Federal Government as well.

It is a cliche in the business world that the old ways of doing business are long gone. The market has always disciplined for-profit organizations through three mechanisms; performance standards, pricing information and the constant possibility of consumer choice, or the option of substituting a new and improved service for the old one. Big American companies—including a lot of major employers in Ohio—had to learn many difficult lessons as a result of foreign competition in the 1980's. State and local governments had to learn many of the same principles in the 1990's. Now the Federal Government will learn them as our Nation approaches the year 2000.

These lessons are, first, the citizens of the United States are becoming aggressive comparison shoppers with extremely high performance standards and heightening expectations of service. Second, citizen taxpayers are beginning to see that they and their elected leaders have more alternative choices than ever dreamed possible. And third, citizens are getting accurate and unambiguous information about the pricing of Government goods and services.

This increased access to information is a momentous development. It is true the cost of Government has gotten too big to be ignored. The cost of Government in taxes is now the single largest item in every family's budget. The average American family now spends 40 percent of its income in taxes, which is more than its expenditures for food, clothing and shelter combined.

What will really make the difference though is that from the middle of the 1990's onward, I believe the Federal Government will be subject to a pair of constraints. A constitutional requirement for a balanced budget and a constitutionally mandated three-fifths vote on any tax increase by the Congress. Ohio has the former and I am confident that we will soon have the latter.

For us legislators and executives, the balanced budget and supermajority requirements are decisive indicators of how well we have done our job. The constitutional amendments do not say that we

cannot pass an unbalanced budget or a tax increase, but they do say we cannot do it either without explicitly going on record and telling people what we as their elected employees have done. These requirements force us to say that we could not think of anything better to do. Believe me, that is a tough test.

Three basic questions are being asked at the State and local levels. You have heard them laced in the comments of my fellow panelists. What exactly does the city and State need? Who can best provide it and how much will it cost? To Governor George Voinovich and me this is not rocket science, but it is really tough to ask these questions and to make them stick. Consider this, of the 50 States, 49 have a constitution or statutory budget balancing requirement. As of the last year, 49 States expected to end the previous fiscal year with their books in balance. And incidently, of the 49 States which balanced their budgets, 47 ran surpluses; 10 States currently require a three-fifths or a two-thirds super-majority in the legislature to raise taxes. On the whole, these States have been even more successful in restraining the size of Government. In super-majority States, per capita spending increases increased by an average of 95 percent between 1980 and 1990. In States without super-majority requirements, spending increased a significantly higher 102 percent.

The achievement of the States stand in marked contrast to the failure by Congress to pass a balanced budget for 29 of the last 30 years and 25 years in a row. There is a single root behind the inability of Congress to manage our Nation's financial resources wisely. It has long exempted itself from the market discipline that applies to lower levels of government, private organizations and families. Congress has been able to systematically evade its responsibility to the voters for its financial practices and at least hide from the general public the impact of its decisions to tax and spend.

So how, in short, did Congress pick up its big spending ways? Here is a brief catalog of devices. Automatic unlegislated tax increases. Of course, the most notorious of these was bracket creep in the 1970's. And while action in 1981 took care of this situation, over the years, Congress has still found other ways of allowing or attempting to allow a tax increase without an affirmative roll call vote.

Automatic spending growth. This is the entitlement dilemma. And the current services baseline which includes programmed spending increases from year to year.

Deceptive voting practices which this Congress is starting to deal with.

Incumbent protection; unfunded mandates which Governor Voinovich was in the leadership fighting with my two colleagues who have fought this fight at the local level.

Regulatory takings, rights of private action. You begin to see my point.

Finally, there are two reasons why the Federal Government never had to make the tough decisions and adopt the bold but politically risky strategies State officials have had to accept. To start with, the Federal Government enjoys access to world capital markets. So far its access has been unlimited. We have been fortunate that foreign investors and central banks still have sufficient con-

fidence in the strength of our Nation's economy to purchase most of our debt. They still do, perhaps because the U.S. Treasury—U.S. Treasury bonds are backed by the full faith and credit, which is to say the unrestrained taxing power of the Federal Government. It is unclear however that this situation will continue. The Federal credit card might be reaching its limits.

Moreover, the Federal Government is not in competition with other jurisdictions in the United States. Federal policies are the same everywhere. People cannot move around to avoid them without going overseas. And though competition between countries is becoming ever more keen, the overall disadvantage of the United States are such—the advantages of the United States are such that the Federal Government does not feel direct competition with other countries in a way that we as State leaders feel and that has forced us to compete among ourselves for jobs, employment and taxpaying citizens. The States have never been able to afford this type of self-indulgence. The Federal Government heretofore has lent itself this sort of self-indulgence. I think that is one of the two most pressing problems that we still must address during your session this year—the balance of this year.

We also have many management tools which the Federal Government chooses not to exercise, and other conditions which help keep our eyes on the bottom line. These include the balanced budget amendment requirement, the line item veto, super-majority requirements, less protection for incumbency, more market discipline for State and local finance, less reliance on withholding taxes. At the local level, there is no withholding for property taxes. Making taxes visible and encouraging taxpayers to consider whether they are really getting good value for their money.

Next, the intense competition I mentioned between States and cities for investment, jobs and taxpayers are missing at the Federal level.

And finally, ironically, the pressure of unfunded mandates—which we at the State and local level, with your assistance, beat back—have helped to liberate our thinking on management and it has made us anxiously ready for change and convinced us that the status quo is not an option.

Those of you in the 104th Congress seem to share our conviction in the States that the time for change is now. I certainly do not mean to cast aspersions on Congress as an institution in my remarks today. Indeed, I hail you for your passing of the line item veto and the balanced budget amendment through the House, for your progress in making cost benefit analysis a part of regulatory legislation and for working with the Senate and President Clinton to end unfunded mandates.

And finally for adopting a parliamentary order that requires three-fifths majority vote on an income tax increase in the House. And for many, the benefit of these procedural reforms, we owe you a great deal of thanks.

The current Congress has gone a long way to removing many of the needless obstacles to a dramatic shrinking of government that in my view should be your next priority. Perhaps nothing in politics that is right is easy, but I personally think some shrinking of government is virtually inevitable if you are to be able to make the

budget resolution you have adopted stick through the appropriations process.

You have created a new performance standard for government. The results has been the creation of State and local governments as powers in their own right—the results of these pressures that I have discussed with you this morning.

I would like to close by saying that the taxpayer movement, whose spirit is captured in the charts that have been provided for the audience and the committee has become a vast virtual community that collectively follows Congress and the State capitols more closely than any firm of Washington lobbyists could ever have hoped.

The people with greatest interest in spending discipline will be the people working to promote the balanced budget and super majority requirements in their home State, and they will be fully engaged in national politics and yet they will be working on these issues at the local level.

Here in Ohio, we are pleased to be part of this movement. I serve as chairman of the Ohio Taxpayer Protection Committee and we support HJR–9, the Ohio Taxpayer Protection Amendment that would (1) require three-fifths majority vote of the General Assembly to increase any taxes or repeal any existing tax exemptions, or authorize the General Assembly by a majority vote of each house to submit the question of new or increased taxes to a vote of the people on a Statewide ballot in lieu of passing a bill to impose a tax. This measure has been adopted by the Ohio House of Representatives and now awaits action by the Senate. If the amendment is not approved, an even stronger version will most likely be subjected to an initiative on the November 1996 ballot.

Mr. Chairman, members of the committee and members of the public, I have attempted to whittle down a 30-page statement and so I have summarized it as quickly as I could and I thank you for the opportunity to share these opinions with you. [Applause.]

[The prepared statement of Mr. Blackwell follows:]

TESTIMONY OF HON. J. KENNETH BLACKWELL
TREASURER OF THE STATE OF OHIO

Delivered before the
Committee on Government Reform and Oversight
U.S. House of Representatives
Field Hearing in Cleveland, Ohio
July 14, 1994

Mr. Chairman, let me say how grateful I am for this opportunity to testify and how privileged I feel to serve on a panel with such exemplary public servants. Mr. Chairman, distinguished members of the Committee, and fellow panelists, I welcome you to the Buckeye state. I come before you as a statewide elected official, as well as the chief fiscal and investment officer of my great state.

I would like to discuss the factors that now make state governments -- of all states -- and local governments, and private voluntary organizations newly capable of competing with the federal government and one another as providers of what used to be considered exclusively governmental goods and services.

I particularly want to address the management revolution that has gone on in state government, and the underlying conditions that have allowed -- if not forced -- the states to achieve huge productivity increases and improved services to the taxpaying citizen at a lower cost than ever thought possible before. Moreover, I will explain to you how these basic conditions, which have brought an immensely positive transformation to state government, now apply to the federal government as well.

It is a cliche' in the business world that the old ways of doing business are long gone. Today I am here to tell you that the old ways of public service are long gone as well. The name of the game is serving the people, which now may be done through for-profit and private voluntary organizations as well as through the public sector.

The market has always disciplined for-profit organizations through three mechanisms: performance standards, pricing information, and the constant possibility of consumer choice, or the option of substituting a new and improved service for the old one. Big American companies -- including a lot of major employers here in Ohio -- had to learn many difficult lessons as a result of foreign competition in the 1980s. State and local government had to learn many of the same principles in the 1990s. Now the federal government will learn them as our nation approaches the year 2000.

What are these lessons I speak of?

First, the citizens of the United States are becoming aggressive comparison shoppers with extremely high performance standards and heightening expectations of service every day.

Second, citizen taxpayers are beginning to see that they and their elected leaders, their legislators and their mayors -- have more genuine and truly alternative choices than anyone ever dreamed possible, even until recently. They are, after all, citizens of the world's freest country. They can vote for and demand from government anything they want.

Third, citizens are getting increasingly accurate and unambiguous information about the pricing of government goods and services.

This increased access to information is a momentous development. It is true the cost of government has gotten too big to be ignored. I am sure you have all heard that the direct cost of government in taxes, as calculated by the Tax Foundation, is now the single largest item in every family's budget.

The average American family now spends 40.2 percent of its income in taxes, which is more than its expenditures for food, clothing, and shelter combined.

What really makes the difference, though, is that from the middle 90s onward, the federal government will be subject to a pair of constraints I am doing my best to apply to Ohio here and now: a constitutional requirement for a balanced budget, which we already have, and for which I am grateful, and a constitutionally mandated three-fifths vote of the state legislature on any tax increase, which I am confident we soon will have.

For us legislators and executives, the balanced budget and supermajority vote requirements are decisive indicators of how well we have done our job. The constitutional amendments do not say we cannot pass an unbalanced budget or a tax increase, but they do say we cannot do either without explicitly going on record and telling the people what we as their elected employees have done. These requirements force us to so say that we could not think of anything better to do.

Believe me, that is a tough test. Have you heard of the Japanese consumer who demands absolute perfection in every product? Well, every day I have to deal with Ohio taxpayers who demand great service at a good price. The folks out here will not take "Sorry, that is the best I could" for an answer.

I would like to divide the remainder of my remarks into three parts.

Let me tell you -- quickly -- how state and local governments have learned to deliver great service at a good price.

Then, I will tell you how the federal government failed to learn these lessons, though in the last six months it appears to have been catching on fast.

Finally, I will tell you about the pressure that is building for a volcanic explosion, a seismic upheaval, a tectonic shift -- call it what you will -- in the form and nature of our representative government.

America is a great country, and despite huge remaining areas of poverty and injustice, we are a great people, better educated, wealthier, and more involved in our democratic self- government than any other people on the planet. We deserve a government worthy of our greatness. With the three-fifths supermajority requirement for new taxes, I believe we will begin to get one.

States' Success in Shrinking Government

As for our successes in shrinking government here in Ohio, you will hear plenty later this morning from a distinguished panel of Ohio local government officials. I don't want to steal their thunder, but in

my own office management staff has been reduced from 19 to 13 staff members -- a 32 percent reduction-- and staff overall has been shrunk by seven percent for a total savings to Ohio taxpayers of more than $300,000. Meanwhile, we have installed a financial management system as sophisticated as any in the private sector, and have gained national recognition for our efforts. We have also pledged to keep Ohio tax dollars invested in financial institutions within the state.

Probably the best thing we can do for purposes of this hearing is to go straight to the man who literally wrote the book on shrinking local government. I refer to Mayor Stephen Goldsmith of Indianapolis, who has reduced the size of his city government, law enforcement functions not included, by an astonishing 38 percent over three years. If you haven't read Mayor Goldsmith's book, I urge you to do so -- immediately.

Essentially what Goldsmith did is systematically review city functions one by one and create a team of entrepreneurs -- the Service, Efficiency, and Lower Taxes for Indianapolis Commission (SELTIC) -- to help him in these efforts. The recommendations from SELTIC alone helped trim $100 million from the city budget. For a few other examples:

Indianapolis opened the operation and management of the city's wastewater treatment plants to competitive bidding. The winning bid improved the technology used and cut costs by 44 percent.

Trash collection was opened to competitive bidding. The city will save $15 million over three years. The cost of trash collection has dropped from $85 to $68 per household.

Competitive bidding cut street repair costs by 25 percent.

The microfilming of public records was privatized for an annual cost reduction of 63 percent and a savings to the city of $425,000 per year.

Clearly, a pattern is emerging here. Mayor Goldsmith's checklist is a little more elaborate than mine, but essentially it is the same as the one I gave you earlier: performance standards, pricing information, and active choice or substitution. Mayor Goldsmith is deeply committed to examining every item in the city's budget and asking three basic questions:

What exactly does the city need?

Who can best provide it?

How much will it cost?

To me, this is not rocket science, but it is genuinely tough to ask these questions and make them stick. What Mayor Goldsmith has done is simply apply them more thoroughly than most. But he is not alone. In Massachusetts, Governor Weld has cut taxes nine times. In Michigan, Governor Engler has signed fifteen tax cuts, including the elimination of the inheritance tax. In other states, Governors Thompson, Whitman, Allen, and Pataki have shown it is possible to cut taxes and cut spending while delivering prosperity and improved quality of life to their citizens.

Consider another measure. Of the fifty states, forty-nine have a constitutional or statutory budget balancing requirement. As of last year, forty-nine states expected to finish 1994 with their books in balance. The lone exception was California which has suffered from earthquakes, floods, fire, and a severe recession owing to defense cutbacks as much as cyclical factors. Yet its deficit as a percentage of state spending was only one-tenth the size of the federal budget deficit.

And incidentally, of the 49 states which balanced their budgets, 47 ran surpluses.

Ten states currently require a three-fifths or two-thirds supermajority in the legislature. On the whole, these states have been even more successful than in restraining the size of government. In supermajority states, per capita state spending increased by an average of 95.25 percent between 1980 and 1990, according to a Heritage Foundation study. In states without a supermajority requirement, spending increased by a significantly higher 101.98 percent.

Why Congress Has Failed.

The achievement of the states stands in marked contrast to the failure by Congress to pass a balanced budget for 29 of the last 30 years and 25 years in a row. I salute you for your courage and vision in approving a budget outline that probably will, at last, balance the federal budget seven years from now. All of us in Ohio are proud of the leadership Budget Committee. John Kasich has given you in this effort. But the fact remains that in the year 2002, the federal government will still have been without a balanced budget since 1969. The federal debt per capita as it stands now is well over $16,000 for every American citizens, and it will be even higher then.

There is a single root behind the inability of Congress to manage our nation's financial resources wisely. Congress is the Supreme Legislature of our land. As such, it has long been able to exempt itself from the market discipline that applies to lower levels of government, private organizations, families, individual citizens, and even most countries. Congress has also been able to systematically evade its responsibility to the voters for its financial practices, or at least hide from the general public the impact of its decisions to tax and spend.

So how, in short, did Congress pick up its big-spending ways? Here is a brief catalog of the devices which allowed Congress to greatly increase its total spending over time:

Automatic, unlegislated tax increases. The most notorious of these was bracket creep in the 1970's. As inflation pushed taxpayers into higher income brackets year after year, even if their real earnings did not increase, Congress could count on steady tax revenue to finance new projects and incur new regulations. This situation, at least, was remedied in the 1981 Economic Recovery Act. But over the years Congress has still found other ways of "allowing" or attempting to allow a tax increase without an affirmative roll call vote.

Automatic spending growth. This is the entitlement dilemma, when Congress annually appropriates "such sums as may be necessary," to fund certain programs, without considering whether these programs are actually achieving the results intended. The current services baseline, which includes programmed spending increases from year to year, is another example of the same phenomenon.

Deceptive voting practices. The Congress previous to yours was notable for its use of closed rules to prevent most members from offering spending cuts proposals that were inimical to the interests of powerful figures in the leadership, appropriators, and committee chairman -- all of whom derived their power from the ability to control money and spend tax dollars on behalf of their political constituencies. Meanwhile, voting on a "King of the Hill" rule would allow so- called moderate members to cast vote after vote in favor of spending cuts when they knew, at the end of the day, that these ballots would be nullified by the vote on final passage of whatever the leadership wanted.

Incumbent protection. Voting practices which allowed individual members of Congress to avoid responsibility for actions of the whole body are only part of the story, as you know. Generous franking privileges, an over-developed seniority system, other perks of office, and campaign finance laws that favor incumbents have also helped keep Congress from facing tough issues.

Unfunded mandates. After President Reagan's 1981 bill also made it impossible to raise money through bracket creep, Congress increasingly turned to passing the costs of its programs on to the states. We had to pick up the tab, and we took the hit for higher taxes. As ---- the Mayor of Columbus once said, it is like Uncle Sam taking you to dinner telling you what to eat, and handing you the bill.

Regulatory takings. These are unfunded mandates by another name. The total cost of regulation and paperwork to the economy may be as high as 700 billion dollars, which is more than the federal government takes in income taxes.

Rights of Private Action. A tool sometimes used by Congress to enforce legislation was the creation of open-ended rights to sue and vaguely worded legislation that would allow the courts to interpret the language as they would, and sometimes impose sweeping, costly mandates of their own.

You begin to see my point. I would argue that shrinking government does not require special measures if that is what legislators really wish to do. Instead, it is truly remarkable that Congress would go to such lengths to ensure that shrinking the government never really became an issue, despite the best efforts of Mr. Kasich in the many years he had to wait until his Chairmanship.

Finally, there are two more reasons why the federal government never had to make the tough decisions and adopt the bold but politically risky strategies state officials have had to accept.

To start with, the federal government enjoys access to world capital markets that -- so far -- has been unlimited. We have been fortunate that foreign investors and central banks still have sufficient confidence in the strength of our nation's economy to purchase much of our debt. They still do, perhaps because U.S. Treasury bonds are backed by the "full faith and credit," which is to say, the unrestrained taxing power, of the U.S. Government. It is unclear, however, that this situation will continue. The federal credit card may be reaching its limit.

Moreover, the federal government is not in competition with other jurisdictions in the United States. Federal policies are the same everywhere. People cannot move around to avoid them without going overseas. And though competition between countries is becoming ever keener, the overall advantages of the United States are such that the federal government does not feel direct competition with

other countries in the way we state leaders compete among ourselves for jobs, employment, and taxpaying citizens.

The states have never been able to afford the type of self-indulgence the federal government has hitherto routinely lent itself. We also have many management tools which the federal government chooses not to exercise, and other conditions which help us keep our eyes on the bottom line. These include:

The Balanced Budget Amendment, or similar balancing requirement, which 48 out of fifty states have;

The line item veto;

Supermajority requirements;

Less protection for incumbency;

More market discipline for state and local finance;

Less reliance on withholding taxes. At the local level, there is no withholding for property taxes, making taxes visible and encouraging taxpayers to consider whether they are really getting good value for their money;

The intense competition I mentioned between states and cities for investment, jobs, and taxpayers;

Ironically, the pressure of unfunded mandates on the states has helped liberate our thinking on management. It has made us anxiously ready for change and convinced us that the status quo is not an option.

Those of you in the 104th Congress seem to share our conviction in the states that the time for change is now. I certainly don't mean to cast aspersions on Congress as an institution in my remarks today. Indeed, I hail you for passing a line-item veto and balanced budget amendment through the House; for your progress in making cost-benefit analysis a part of regulatory legislation; for working with the Senate and President Clinton to end unfunded mandates; for adopting a parliamentary point of order that requires a three-fifths supermajority vote on any income tax increase in the House; and for the many beneficial procedural reforms you have made.

The current Congress has gone a long way to removing many of the needless obstacles to a dramatic shrinking of government that in my view should be your next priority. Perhaps nothing in politics that is right, is also easy. But I personally think some shrinking of government is virtually inevitable if you are able to make the budget resolution you have adopted stick through the appropriations process.

By promising in advance what you were going to do and delivering honest, open votes on all ten points of the Contract with America, you have created a new performance standard for government.

I urge you to go forward now and accept the states as both your partners and friendly competitors in serving the American people. We are not the state governments that we were thirty or even twenty years ago.

As another ironic side effect of unfunded mandates -- and revenue sharing during the sixties and seventies -- we are, in fact, much larger and more powerful than we used to be.

We have also been carried upward with the rising tide of the U.S. economy. Since World War II and especially in the last generation, a vast supply of college graduate professionals with management training has helped staff our administration.

Knowledge, culture, and economic power have become decentralized as the economy matures, communications are improved, and the population shifts nationally to the south and west. Washington and the East Coast no longer know best -- if they ever did.

The result has been the creation of state and local governments as powers in their own right that can truly rival the federal government in their ability to administer complex programs, on their own and in partnership with private organizations.

Why politics is different.

In 1994 you heard the warning tremors of an earthquake that will hit with full force in 1996. Do not think the next election will merely be an aftershock. The Big One is yet to come.

On April 15, 1996 -- Tax Day in election year -- the U.S. House of Representatives will hold a straight up or down vote on a Constitutional Amendment requiring a three-fifth supermajority vote for any tax increase. This vote will be televised live on C-SPAN. Virtually the entire nation will be watching. Anyone without a TV will be listening on talk radio. Fax broadcasts and computer networks will be buzz with information.

Then next year, by about this time, resolutions calling for ratification of the three-fifths supermajority for any tax increase will be introduced in all fifty state legislatures. This significant constitutional question will be debated in the state legislatures simultaneously with another vital measure: a Constitutional balanced budget amendment. These two vital questions will be a backdrop to the entire Presidential and Congressional campaign. For the first time ever, federal policy on tax and budget issues will be driven entirely by state level politics and activism.

The states themselves will be consumed with debate on state-level constitutional amendments requiring a vote of the people or a three-fifths vote of the legislature on any tax increase. The taxpayers group, Americans for Tax Reform, will be distributing to all state legislators a pledge against any tax increase. This pledge will be modeled on the highly successful Taxpayers' Protection Pledge against higher federal income tax rates, which has recently been signed by Senator Bob Dole and has been taken every Republican Presidential candidate with the exception of Richard Lugar. It is fair to say that all candidates in the general election somehow will declare themselves firmly against any tax increase and for reductions in spending.

It is not just the issues and temperament of the times that are set against tax increases. The whole operating environment of American politics has changed. C-SPAN is a big part of this, as are talk radio

and the new alternative media. Thanks to C-SPAN, any ordinary citizen can now actually see what is going on in the House and Senate exactly as it happens. Surprising numbers of people have become real connoisseurs of Congressional process and procedure. By and large, they know what is in the bills up for consideration, and they fully understand the parliamentary devices used last year to keep potentially budget-cutting legislation such as the A to Z Spending cuts under wraps.

Those who don't watch C-SPAN as much can hear knowledgeable commentary on talk radio. And whether the viewer sees it on television, or whether he hears a talk radio host announce the fact on-air when a Congressional staffer faxes him a draft of the latest amendment, he is fully aware of the goings on. He can even download the legislation on his home computer and examine it for himself. This means many of the tricks Congress used in the past to avoid spending discipline simply will not work anymore.

Meanwhile, the taxpayers' movement has become a vast virtual community that collectively follows Congress and the state capitals more closely than any firm of Washington lobbyists could ever have hoped. The people with greatest interest in spending discipline will be the people working to promote the balanced budget and supermajority requirements in their home state. They will be fully engaged in national politics; and yet they will be working on the local level.

Here in Ohio, we are pleased to be ahead of this movement. I am honored to serve as Chairman of the Ohio Taxpayer Protection Committee. We support HJR 9, the Ohio Taxpayer Protection Amendment that would:

> Require a three-fifths majority vote of the General Assembly to increase any tax or repeal any existing tax exemptions, or
>
> Authorize the General Assembly to, by a majority vote of each house, to submit the question of new or increased taxes to a vote of the people on a statewide ballot in lieu of passing a bill to impose a tax.

The measure has been approved by the Ohio House of Representatives and now awaits action by the Senate. If the amendment is not approved, an even stronger version will most likely be the subject of an initiative on the November, 1996 ballot.

Thank you for the opportunity to share my experiences with you.

Mr. CLINGER. Treasurer Blackwell, we thank you for your stimulating, provocative testimony. It is very helpful to the committee.

I am not going to recognize every member of the committee for questions, in view of the fact that we do have a long schedule and many other witnesses to hear from. But I would recognize any member who does have a question. And I would recognize Mr. Horn.

Mr. HORN. Thank you, Mr. Chairman. I have two questions, both for Mayor Rendell, but anyone else is welcome to also get their views in.

On page 4 of your formal remarks, you mention the need to modernize the culture as well as the structure. Maybe you could give us a little description of the type of culture you found—and I know they vary among agencies—but what did you find that would be most helpful, and how did you address it?

Mr. RENDELL. Well, I do not think that I have addressed it as well as I would like to address it and it really keys in on the remarks I made about a culture that there is no real incentive for doing good in the workplace. I think civil service is a very commendable process, particularly for entry level into jobs. But to have promotions totally governed—as they are in Philadelphia and many other cities and many Federal agencies—totally governed by a written test that basically ignores what that employee has done for, let us say a 2 or 3 year period, is nonsensical. Can you imagine any private sector entity making promotions based on a 2-hour test and essentially ignoring 3 years worth of work product? Not only do you get the wrong people promoted sometimes, but worse, when employees know that their managers or supervisors have no power to affect their lives or careers, cannot give them raises, cannot give them bonuses, cannot do anything about promoting them, cannot discipline them, cannot get them fired—when that type of system exists, it creates an incentiveless workplace. And layer on top of that in many occasions in cities, union contracts that have union work rules or past practices, and you have created—if you set out to create a culture for non-productivity, you could not have done a better job. And we have to break that culture and create the same type incentives—I mean there is no way we can do profit sharing as government entities, but we have got to do some form of equivalent of profit sharing to incentivize the work force. Mayor White—I know he had to leave—he said it best. We want to convince our people how important it is what they do, No. 1; and No. 2, that there is a real stake in the venture for them in what they do and how they do it. And that is the most important culture that has to be changed in government.

Mr. HORN. One possible way—and I would like your brief reaction to it—is overlapping pay scales where they could merge. Say you had four basic categories, especially for managers and supervisors, where they would overlap and the decision on what they make on those broad scales would be simply based on merit, performance and achieving the agreed-upon goals.

Mr. RENDELL. One hundred percent.

Mr. HORN. Are you working on something like that?

Mr. RENDELL. Well, I tried to do some of those things by changing the city charter, but it got caught up—many of those manage-

ment reforms, voted on individually, would have been approved by the taxpayers—but it got caught up in some broader issues and we lost that effort. If I am elected to a second term, I am going to try that again when it becomes more clear that these are things we are doing for the overall good of the city, not to empower any one particular organization.

So we are trying to do that, but I think it would be enormously effective—I was the elected District Attorney in Philadelphia and for my civil service work force, I had to do the same things I have just described. For my attorney work force—and I had an office of 500 people, 207 assistant DAs—for my attorney work force, I could pay them whatever we wanted to pay them, we could promote them in the categories whenever we wanted to promote them. And I would walk around that office at 7, 7:15 at night and 60–70 percent of the people would be there.

Mr. HORN. Last question. One of the great raging public administration arguments we are facing in looking at restructuring some of the Federal Government within the professionals in the field is this—and I think given what you say on page 19, you might give us a real insight—as you know the Office of Management and Budget is the right arm of the President since 1921, to create an executive budget. But the emphasis had always been on budget. President Nixon put the "M" in what was the Bureau of the Budget, to make the Office of Management and Budget. Many of the people that have served all Presidents since Truman are still alive, that held the function on management. They say it is not working, that when you merge management with budget, nobody pays attention to management they just pay attention to budget. Some of us said that if you have the budget power, you do get people to listen to you if you also throw in management. But I have heard enough of them say I am dead wrong, that I am willing to think I am dead wrong. But I notice you created this Office of Management and Productivity, and you acted as a clearing house for new ideas, you championed management improvement projects that crossed departmental boundaries. The question is did you ever think of merging it with budget and did you have a specific reason to keep them separate, perhaps because they would be submerged?

Mr. RENDELL. It is exactly what you said. I created it because our budget people—and we have good—we had good budget people before I began as mayor and we still have many of those same people and we have added some more good ones. But they are very myopic, and they should be myopic. They are interested in that bottom line. They are interested in purely the budget. I do not think it works to have them have—although they do get your attention—to have them have the management oversight responsibilities.

What we do, we have something called the Initiative Compliance Committee that meets and the budget people are there, Office of Management and Productivity are there, it is headed by my chief of staff and they bring in every quarter, each department, how are they doing not only on budget, but also how are they doing on management. And remember, as I said in my remarks directed directly to Congresswoman Collins, good management helps the budget. I mean, they are not necessarily diametrically opposed. In fact, they basically should merge. But budget people have a tough time polic-

ing the numbers, doing oversight, they do not really have the time or the inclination to do management. So I think the function should be split. And again, we are not looking to create a new bureaucracy, but I think that is an excellent suggestion.

Mr. HORN. Well, I thank you and we will quote you liberally. [Laughter.]

Mr. CLINGER. The gentlelady from Illinois.

Mrs. COLLINS. Thank you, Mr. Chairman. I first of all want to salute Mayor Rendell for the wonderful job he tells us he has done in Philadelphia and to say, that I am sure that he has met with our mayor in Chicago, Mayor Richard M. Daley, and that some of these things—these delightful things that he has done and certain successful ones he has mentioned to the mayor in your meetings of the mayors that you have from time to time. You are to be commended for the great success that you have made.

Let me point out too that we are talking a great deal about change and of course change is something that we have been talking about, particularly now for about a good 2½, 3 years.

I want to point out something too about the performance status on civil service. Now, you mentioned that there are civil servants who are sometimes hard to get rid of and all these kinds of things. The chairman and I and others on this committee, have sat with Vice President Gore and one of the things that we are looking at is ways in which we can in fact create some civil service reforms, this is something that we all support at the Federal level. Of course, as you very well know, I think we are all very concerned about having people work for either the Federal Government or any other government who are not producing and who cannot be reprimanded in some way or even removed. We want to get the biggest bang for the buck for all of our work and it is certainly something that we all look forward to.

You mentioned too about reinventing or restructuring and downsizing of HUD. Reinventing America was something that, of course, Vice President Gore also has spoken about for the past 2 years. He wrote a few books about it, and we have begun that process. I think, you mentioned, you were at the hearing when our committee, had hearings with Secretary Cisneros, at which he talked about how he was going about downsizing the Department of HUD, getting rid of some programs that just are not working, using money that is lying in the pipeline that is just sitting there and not being used. Chicago is a prime example. As a matter of fact, they took some very drastic action by going to Chicago Housing Authority and actually beginning to have HUD itself operate that housing authority, which is something I felt was absolutely necessary.

You know, Secretary Riley has done something very similar over at the Department of Education—not in taking over any schools or anything like that, but certainly looking at restructuring, and downsizing and all kinds of different things.

The messages that we are hearing today are all correct messages about how we can go about giving the American people what they really want at less cost to the Federal Government or any other government, for that matter.

The concern that I have is about the swift movement that we have in the 104th Congress to just blanketly eliminate whole programs without any forethought on the way they have operated in the past. I do not think that elimination of everything without looking into it very deeply is the way to go about reforming. It is not an alternative for reforming, and it is something that we have to look at very, very carefully.

Now we need to decide on a very intelligent level, which Federal activities and services are appropriate. We need to think about what we are doing to people when we talk about cutting out people programs, such as cutting money for Medicare, cutting school lunch programs, cutting social security benefits for our senior citizens, et cetera. Those are important people programs.

Now everybody says we have to work efficiently and effectively, and we do. We must also bear in mind that when we lay off large numbers of workers, when we refuse to give health care to certain senior citizens, when we do not give scholarships to students who want to go to school, et cetera, those people are going to be there and the Federal Government or some other government, either State or local, is going to have to pick up where somebody left off because they are not able to provide for themselves. Somebody said the poor we will have with us always. That has not been what we have been talking about in America. In America, we say everybody has a right to expect to be able to enjoy the benefits, the fruits of their labor and of our country. That is what we are talking about.

So, we are trying to balance all these things in the 104th Congress, and I hope that we will be kept in mind by those who figure that we ought to just throw everything out—throw the baby out with the bathwater, leave people on the streets selling pencils as we did back I am told in the 1930's, before I was born, thank goodness. Those kinds of things we certainly want to avoid.

I want to say too, while I have a little bit of time, to the treasurer of the State of Ohio, I looked at his long history of accomplishments. He also worked at HUD at one point in time and he knows some of the problems that are there. I hope, however, that he has been able to keep in mind that all this restructuring that we are doing was not just done in the 104th Congress, some of it began in the 103d Congress and it is continuing on at this point in time.

So, while you give great accolades to the 104th Congress, which is only 6 or 7 months old now, most of this started in the 103d Congress which went on for 2 years. [Applause.]

Thank you. I yield back the balance of my time.

Mr. CLINGER. I thank the gentlelady. And I would state that the purpose of this hearing and the hearings that will follow are precisely to avoid rushing to judgment. We are really trying to take a very thoughtful, very considered and very deliberate look at all of these efforts, because I do not think any of us want to rush into things that we are going to regret when we have completed. So I can assure the gentlelady that I am determined to have a very, very deliberate and thoughtful process here.

I would also remind our members of the panel here that we do have three or four more panels, plus some open mic time, so please let us keep our comments very brief.

The gentleman from New Mexico, the vice chairman of the full committee, Mr. Schiff.

Mr. SCHIFF. Thank you, Mr. Chairman, I will heed your caution.

One matter. Mayor Rendell, it clicked in my mind when you mentioned that you were the former district attorney in your area, as I was in mine. In my recollection, Philadelphia has been noted very recently for turning large numbers of people loose from its county jail for lack of funds. Am I recollecting correctly? And if so, what is being done about that?

Mr. RENDELL. No. 1, if I might, I just wanted to make note for the record that not only do we discuss things with Mayor Daley, but many of the things we have done in Philadelphia, we borrowed from things Mayor Daley already did.

We have a Federal order capping admission to our prisons. It occurred about 5 years ago, a couple of years before I became mayor. It is something that you attempted to address as a Congress in the crime bill. There was specific legislation put in about consent decrees that led to prison caps. It is not because of lack of operating funds, it is because we have overcrowding. We have addressed that by building a new—in our city prisons, we just hold detentioners and people sentenced to short sentences. The longer term sentenced prisoners go to the State prison. We have addressed that by building a new prison with 1,000 additional cell capacity. That will open in September. So we have addressed that. We have got a second prison in our capital budget to be built in 1997. We will increase our overall capacity by about 1,500.

But the problem is not caused so much by lack of funds, although before our recovery, we did not have funds available to build these prisons—it is caused by too much crime. And too much crime, we could spend the next week talking about why there is too much crime everywhere in America. Part of it is prevention, part of it is more police, part of it is economic opportunity and other things. But we are addressing that problem, and it was not because of lack of funds, it was because of lack of facilities. The judge placed what I believe was an improper cap on our facilities. She capped it at a far too low level. I have always contended that the prisons could have taken an additional 1,000-plus prisoners because choosing between prisoners who have done something—their comfort, and the safety of the streets, I think was a pretty easy choice. And as long as we were not holding prisoners in cruel and unusual conditions, violative of the Constitution, I did not think there should be a prison cap. But the Federal Government imposed it.

Mr. SCHIFF. Let me just conclude and say that I, by no means, believed as a prosecutor, nor do I believe now that everybody who commits a criminal offense therefore should go to prison.

Mr. RENDELL. Right.

Mr. SCHIFF. I think there are many alternatives that should be available. But when you talk in terms of where does not spending money cost you more in the long run; the No. 1 place I have seen in a career in law enforcement is you turn people loose in the streets who should be behind bars, you will pay 10 times more in dollars, never mind human heartache and injury——

Mr. RENDELL. Right.

Mr. SCHIFF [continuing]. In dollars what you would pay to keep that prisoner.

Mr. RENDELL. You are absolutely correct. You have addressed that in the crime bill. For example, in my State, in Pennsylvania, as part of the crime bill you passed, we will get 4,400 new prison cells Statewide. And I agree with you, the cost of having a recidivist is untold, you cannot calculate it. But I think this Congress has taken some strong steps to address it. But I think that anyone who thinks—and I am sure you agree with me—that we can jail our way out of the crime problem—it is a combined approach.

Mr. SCHIFF. That is right, but that is part of it. Thank you, Mr. Mayor.

Mr. CLINGER. Next, I would like to call upon the gentleman from Indiana, Mr. McIntosh, the chairman of our Regulatory Reform Subcommittee.

Mr. MCINTOSH. Thank you, Mr. Chairman, I have got two sets of questions. I will be brief in asking them.

The first is for Secretary Martin, and let me tell you that I have a success story at home that I will tell you about some other time, that I was going to tell you about in our questioning.

You mentioned, and I think you are exactly on point, that we need to re-examine fundamental assumptions about how our programs work and that 5 percent here one way or another does not get us to that. When you were Secretary of Labor, you tried to combine a lot of the programs and pushed toward that. And that is the success story I wanted to tell you about. One of the local ones in my hometown did it and it is working well. But we did not really eliminate anything, did not have the power to.

And now in Congress, as a Member of the freshman class, we thought we could eliminate a lot of programs pretty quickly, and we are discovering in all these appropriations bills that no, it is really just a haircut here and a little bit less spending there. And frankly it is getting a little frustrating sometimes because we wonder how do we actually make those changes. And I was wondering if you had any insights in how we could force the system, either in the executive branch or the legislative branch, to address those fundamental questions? They are politically tough, it is a lot harder to say we are going to zero out something than it is to say we are going to just cut it here a little bit each year. And if you have got any advice for us along those lines, that would be tremendously helpful.

Ms. MARTIN. Not a lot of it, so do not worry, chairman.

I will quote Mayor Rendell, fight the good right and do not give up on it.

But the second part is go to result-oriented, objective criteria. I mean, you know—let me use the JOBS program because that interests me, it interests all of us, that is what we are talking about, about people's lives. People mock work a lot of times, but guess what, it is an incredible void, aside from welfare costs. Work gives people stature within themselves too—I do not want to sound too Californian for a moment, but I mean, this is very important—midwestern practical sense here.

Let us use the JOBS program, and we now have many of them that have been in existence for a number of years. If at the end

there is no more jobs that the clients have than they would in a program without that cost, the program is not working. Now that is not nice, because we would rather believe that all of them work. But that is not as hard as saying let us end JOBS programs. I mean you can say here—if 10 of them are working, that is great.

The other thing I would say is be tougher when you give grant money. And I will use JOBS again. We have a lot of private institutions that train people, supposedly. They get their money up front. So it is not just public sector, these are private folks that have made a lot of money from government grants. Well why would it not be absolutely just common sense that at least a third of the money is retained until the person who has had the program gets a job, since it is a job program. And if you do not ever do that, if you get the money up front and if they are able to use, bluntly, political—interesting political stuff and it is on the congressional level, it is never going to change. And the people who really are hurt are not just taxpayers. These are second and third time folks in these programs, who often are 29, 30 years old. This is their last time. One more time and their dream is blown and somebody has made money from it—I do not think so. I think there are a lot of things you can do that keep your eye on the customer, your eye on the prize, and the prize is that people get what they thought they were signing up for and what is paid for. And you look at it objectively. Not everyone at 28 has dropped out of school—you do not say 100 percent of the people are going to become President of IBM. Let us be realistic here. But on the other hand, to not have anything in a program that requires results before full payment is given, there is not a private enterprise in the world that would let that continue.

Mr. McINTOSH. Thank you, I appreciate that.

Mr. CLINGER. The gentleman's time has expired and I would now recognize the freshman member of the committee, the gentleman from South Carolina, Mr. Sanford.

Mr. McINTOSH. Mr. Chairman, could I ask unanimous consent to have a couple of other questions put into the record, because it would actually be important for establishing a record and a couple of other things in there, to Mayor Rendell about regulatory——

Mr. CLINGER. Without objection, so ordered.

The gentleman from South Carolina, Mr. Sanford.

Mr. SANFORD. Thank you, Mr. Chairman.

Mayor Rendell, I have one quick question for you. And that is, I did some math here on the back of an envelope and I was impressed to read about your Office of Fleet Management. It looked like you ended up with a total reduction in terms of number of cars in your fleet of 8 percent. If you took the 600,000 vehicles that the U.S. Government owns and applied that same math, you would end up saving about 50,000 cars. Assuming I guess, on the ride in from the airport, that they were not Ford automobiles, the idea of reducing 50,000 cars, in terms of purchases by the Federal Government, would be a good thing.

Give me your thoughts on (a) how it has worked in Philadelphia, but more importantly do you think it would work in a country as geographically spread out as the United States?

Mr. RENDELL. No question, 8 percent is probably a solid figure, and there is no question if you examine cars in any government and even in ours now, I would bet if somebody came in and did a study after we have knocked out 8 percent, they would probably find another 3 or 4 percent we could knock out. And 50,000 cars, it is not only the purchase price you are saving—gasoline, maintenance, all of those things, all of those things. Nobody has challenged—what has happened again in government is it just bumps along, nobody challenged the fact that this department had 23 vehicles—nobody challenged it. And it ought to be challenged. The private sector has done that in every way. Should they have 17 different departments, they challenge those assumptions. Vehicles is a perfect example.

And you know, you are not going to balance the Federal budget by eliminating the cost of 50,000 cars and operating expenses, but it adds up. And more importantly, it sets a tone that carries over. We should challenge every assumption.

And by the way, I think the Vice President deserves some credit. He started in the right direction. You may not be, as a Congress, satisfied that he has gotten there quickly enough, but he started in the right direction. We can keep it up and we should challenge every assumption that we do.

You are a government, just like us, we are deep in debt. If you were the new CEO of a business deep in debt, you would challenge every assumption, everything that you did. So I think fleet management is a great idea, assessing the fleet. Also, what fleet management did is in reducing down time. We had 30 percent of our vehicles down on an average during my first year as mayor. The private sector, you know, the Bell Telephones, et cetera, have 10 percent of their vehicles down at any one time on an average. Why were we at 30, why were they at 10? My guess is if you looked at the Federal Government, they may not be as bad as 30, but they are surely not at 10.

Mr. SANFORD. Thank you. I will yield back the balance of my time, Mr. Chairman.

Mr. CLINGER. The gentleman—another very valued freshman member of the committee, the gentleman from Chicago, Mr. Flanagan is recognized.

Mr. FLANAGAN. Thank you, Mr. Chairman.

And thank you, Ms. Martin, for coming here today. Secretary Martin I have a question for you and for Ms. Baron, actually. In your testimony, you talked very eloquently about mission versus process, and that is a very important discussion where the inertia of government chugs along and continues to propagate itself and programs grow and people lose sight of what the programs do, much less whether they are still necessary. And then Ms. Baron, in her testimony, talked about when corporations divest entities that they own, possess or otherwise control because they are no longer of their core competencies. And I wonder, how transferable is that process that business has figured out as it tries to do a better job, back to government, and say this was a terrific idea, but the Federal Government—maybe a government should do it, but the Federal Government is not the right government. And maybe in the context of your answer you can tell me, should we be taking

a harder look at Article I, Section 8, the laundry list, and should we go back to that and say this is really where we started, this is where we belong?

Ms. MARTIN. First of all, Government is not business and I do not make that confusing statement—and business does not do everything right either. You know, the idea of run it all like business. Wait a minute, some of business is not perfect. So we are not talking about perfection, but the things one can transfer and learn. And may I use your colleague's example of fleet management, which is a part of process. It does not mean process is not important. You know, the first question, should you have cars, or what are they being used for. If the answer is for police, maybe not only you should have them, but you should let them take them home. Where it would be the exact opposite answer for another governmental unit. So I am not suggesting that everything is totally identical. But not only do you have companies at 10 percent, you now have companies going to other companies who manage fleets to bring it down to 8 percent. So that they are always willing to make those changes. And I think the answer here is in process, you should question, question, question. It oddly enough in the long run is a positive for government employees too, because one of the things that government employees have seldom had the chance to do is to be in decisionmaking. Part of what you are trying to do is let some of these very smart people that work for Government be part now of the decision of how to save money and not locked into these old systems. [Applause.]

And that is important. The second part of the answer to this is if the most important committee of Congress in terms of how government works, which happens to be yours under the new setup, does not talk about mission, no one ever will, and you will lose your first, best and last chance to have Government more joined to the people it represents.

Ms. BARON. I am not suggesting either, as Secretary Martin has said, that Government should follow businesses exactly, but in so much as businesses have looked to what they do best. If you run a pharmaceutical company, which would be making drugs, inventing new drugs and therapies for people, it would not be running a mail room or functioning—hiring a cafeteria staff themselves. They often parcel it out to other firms who do those better, and in that sense, divesting from those processes. Also divesting from firms who are multi-conglomerates, are now selling off businesses which do not adhere to their core competencies, such as a pharmaceutical firm which owned eyeglass centers has sold those out because they do not achieve any synergies with their existing business and it in the end caused them more expenses.

Mr. CLINGER. Treasurer Blackwell, did you have a comment?

Mr. BLACKWELL. No, my comment was on another question.

Mr. CLINGER. OK.

I think at this point, we would thank our distinguished panelists very, very much for your patience and for sticking with us throughout this morning. We really appreciate the contribution you have made and cannot thank you enough for being here.

We will now dismiss that panel. And also thank Congressman Stokes—[Applause.]

As soon as we clear the dias here, we will ask the second panel to come forward. A couple of housekeeping items—first of all, I would ask the members of the panel just leaving if you would be willing to respond to questions in writing. And we get an affirmative response to that. So without objection, we will keep the record open for 5 additional days—10 additional days—to allow questions to be submitted to our panelists and responded to.

We are running, as most congressional committees tend to do—behind schedule and I did not call the attention of our first panelist to our clock system here, but I am going to do that with our next panel. What we will ask you to do, if at all possible, is to summarize your testimony in as brief a form as possible. All of the written testimony will, of course, be a part of the record, will be included in the record in full. I would request that the members of the panel try to limit their remarks to about 5 minutes. That would be signaled by our high tech system of signaling up here. We will have a green light and when the 5 minutes is up, there will be a red light, and we would ask you to try to draw to a conclusion when you see the red light.

The second item is that again, I do not want to in any way inhibit the members of our panel. I am delighted that so many of them are here, but again, I would hope that we could limit—or keep the questioning down with the understanding that if this panel is as agreeable as the previous one to accepting questions in writing for the record, we would be grateful to have that, so that might move our process along. We do have members who are going to be leaving us to catch planes at some point, and I want to be sure that all members are heard and all of our panelists are heard.

With that, let me introduce our very distinguished panel and thank them for joining us this morning—now afternoon. James Conrad has been described as the Governor's bulldog on effective, efficient government, he is currently the director of Administrative Services for the State of Ohio, previously having served elsewhere in State, local and Federal Governments, so he has a perspective that not all of our panelists would have. Last year, he was one of the three State officials to be honored by the National Governors' Association for distinguished service to State government. Mr. Conrad, we are delighted to have you here.

The next witness will be Claire Freeman who in just 5 years led the Cuyahoga Metropolitan Housing Authority from a deeply troubled organization to one that was awarded the greatest improved performance award and the removal of troubled designation award last December by the Department of Housing and Urban Development. That is a very notable achievement and one to be very proud of.

Next would be Dr. Keith Rasey, who is director of Federal Government Relations for the Greater Cleveland Growth Association, which represents over 16,000 businesses. His previous experience includes Federal Government service, and we welcome him here this morning.

And at this time, I would ask our colleague, our host, Congressman LaTourette, to introduce the remaining witnesses on this panel, Messrs. Gardner and Whitmire.

Mr. LATOURETTE. Thank you, Mr. Chairman, and very briefly, the two gentlemen on the end of the panel come from local government, both east and farther east of Cleveland. First of all, from the smallest geographic size-wise county in the State of Ohio, Lake County, is my good friend Bob Gardner. Bob is in his third term as county commissioner. Interestingly, he has also served 28 years as a teacher/coordinator for the Lake County Joint Vocational Schools, Auburn Career Center, a long career in elective office, has been the chairman of the Lake County Commissioners, but he is also the chairman of the Revolving Loan Fund and president, I think, of the Lake County Solid Waste Management Policy Committee, where he has been instrumental in establishing the county's recycling program. And Lake County was a leader in the State of Ohio in that process.

Mr. Whitmire, next to him, is a new acquaintance of mine, he is an Austinburg Township Trustee in Ashtabula County. And aside from being a Democrat, he has some pretty good credentials. [Laughter.]

Mr. Whitmire serves as the chairman of the Ohio Public Works Commission, where he is responsible for working with local communities and disbursing over $200 million in public works moneys. He was just re-elected last night, if I understood him correctly, as president of the Northeastern Ohio Township Association, the voice of 14 counties and 231 townships in Ohio.

I appreciate them both being here and appreciate, Mr. Chairman, the opportunity to give the introduction.

Mr. CLINGER. Thank you, Steve.

At this point, I am pleased to recognize for 5 minutes, Mr. Conrad.

STATEMENTS OF JAMES CONRAD, DIRECTOR, DEPARTMENT OF ADMINISTRATIVE SERVICES, STATE OF OHIO; DR. KEITH RASEY, DIRECTOR OF FEDERAL GOVERNMENT RELATIONS, GREATER CLEVELAND GROWTH ASSOCIATION; CLAIRE FREEMAN, EXECUTIVE DIRECTOR, CUYAHOGA METROPOLITAN HOUSING AUTHORITY; DANIEL WHITMIRE, TOWNSHIP TRUSTEE, AUSTINBURG TOWNSHIP, OH; AND ROBERT A. GARDNER, COUNTY COMMISSIONER, LAKE COUNTY, OH

Mr. CONRAD. Thank you, Mr. Chairman, for the opportunity to be here. Before I begin, I would like to deliver a message from my boss, the Governor. First, he is very sorry that he could not attend today to tell you how he is transforming the government of Ohio, making it more efficient and responsive. As you know, Mr. Chairman, he was the mayor of Cleveland for a 10-year period, longer than any other mayor, and he inherited a bankrupt city and actually began to reinvent government before the phrase was actually coined. Second, he wanted me to extend his regards and thanks to the committee and you in particular, Mr. Chairman, for your leadership on unfunded mandates. He is greatly appreciative for everything that you personally have done on that.

I think you will find the changes that we are making in Ohio to be on the cutting edge, from privatizing liquor stores and using smart card technology for welfare recipients, to teaching quality

service through partnership, Ohio's version of TQM, to 60,000 State employees. We are challenging the bureaucracy at every corner.

The three budgets that the Governor has crafted represented the lowest 6 year growth in the State's 40 year history of spending. And today, we have 3,377 fewer employees in State government in those departments under the Governor's control than when he took office in 1991.

However, to bring our discussion down to perhaps a little more micro-level, I will address the changes taking place in the department that I am currently managing, the Ohio Department of Administrative Services, commonly known as DAS. DAS is the business arm of government, doing everything from purchasing to personnel management, it really is a combination of the GSA and the Office of Public Management and others on the Federal level. By law, we have a monopoly service delivery to State agencies. When I came to DAS a little over 2 years ago, I found what one would expect to find in any monopoly, a system that had never needed to change because it had never been challenged. Shortly after being appointed as director, I started a full operational review. We decided to do something that had not been very unique to government at that point, we went out and asked our customers what they thought.

After many months of listening to our employees and traveling the State talking to our customers, we embarked on a voyage that we termed DAS 2000, a Vision for Government. Simply put, it is that the delivery of current monopolized services by DAS is being replaced with more cost-competitive ways of providing services to our customers. The goals were and continue to be finding ways to eliminate waste, duplication of effort and unnecessary control on our customers. Every function DAS performs was examined and evaluated for both service delivery and efficiency. In cases where we were adding unnecessary time and money to the various process, we simply reduced our involvement. For instance, changes in the construction administration process will bring the time down it takes to build a building from years down to a little under 1 year.

Where our customers had the ability to do things for themselves, we turned that responsibility back to them. By getting out of the way, we reduced the purchasing process for State government by as many as 6 weeks. And not only are we streamlining the process, but where it makes sense, in areas that we cannot compete with the private sector, we are simply out-sourcing that function.

As you can imagine, DAS 2000 has had a major impact on our budget. The DAS budget was cut by 9 percent each fiscal year in the upcoming biennium for a total reduction of $51.9 million. And that is an actual reduction of 11 percent over our previous year's budget.

The final piece of the puzzle was added last month when the legislature passed Senate Bill 99, significantly changing the purchasing, printing and civil service laws that we administer. These changes will result in an additional savings of $8 million to $10 million a year to the taxpayers of Ohio.

Finally, Mr. Chairman and members of the committee, I would be remiss if I did not point out that our changes are being accomplished as a result of teamwork. Labor and management have been

working closely together to determine how to reduce costs. Credit should be given to the State employees unions who took a giant step out on a limb, to form a partnership with us. They too understood change was inevitable and that the old ways of doing things was simply no longer acceptable.

I could go on and on pointing out about the dramatic changes that we are making; however, as you pointed out, in the interest of time, with my testimony being submitted in its entirety, I would thank you for the opportunity to express on behalf of the Governor a little bit on what we are doing at DAS and in State government.

[The prepared statement of Mr. Conrad follows:]

THANK YOU MR. CHAIRMAN FOR THE OPPORTUNITY TO BE HERE TODAY. BEFORE I BEGIN I WOULD LIKE TO DELIVER A MESSAGE FROM MY BOSS, THE GOVERNOR. FIRST, HE IS VERY SORRY THAT HE COULD NOT ATTEND TODAY TO TELL YOU HIMSELF HOW HE IS TRANSFORMING GOVERNMENT IN OHIO, MAKING IT MORE EFFICIENT AND RESPONSIVE TO THE TAXPAYERS. SECONDLY, HE WANTED ME TO EXTEND HIS REGARDS AND THANKS, IN PARTICULAR TO YOU MR. CHAIRMAN, FOR YOUR LEADERSHIP AGAINST UNFUNDED MANDATES.

I THINK YOU WILL FIND THE CHANGES WE ARE MAKING IN OHIO TO BE ON THE CUTTING EDGE. FROM PRIVATIZING LIQUOR STORES AND USING SMART CARD TECHNOLOGY FOR WELFARE RECIPIENTS, TO TEACHING QUALITY SERVICES THROUGH PARTNERSHIP (QSTP), OHIO'S VERSION OF TQM, TO 60,000 STATE EMPLOYEES, WE ARE CHALLENGING THE BUREACRACY AT EVERY CORNER.

SHORTLY AFTER TAKING OFFICE IN 1991, GOVERNOR GEORGE V. VOINOVICH ESTABLISHED THE OPERATIONS IMPROVEMENT TASK FORCE (OIT) TO FIND WAYS THE STATE COULD PROVIDE MORE EFFICIENT SERVICES TO OHIO'S CITIZENS.

GOVERNOR VOINOVICH DESIGNED THE OIT AS A PUBLIC PRIVATE SECTOR PARTNERSHIP, GAINING THE SUPPORT OF MORE THAN 100 COMPANIES IN THE PROCESS. THESE COMPANIES DONATED MORE THAN $500,000 AND 300 INDIVIDUALS TO THE EFFORT AND SPENT MORE THAN 150,000 HOURS REVIEWING NEARLY EVERY ASPECT OF STATE GOVERNMENT.

THE RESULT OF THESE INTENSE EFFORTS WAS APPROXIMATELY 1600 RECOMMENDATIONS ON IMPROVING EFFICIENCY IN STATE GOVERNMENT. THE EFFORTS OF THE INDIVIDUALS AND COMPANIES THAT COMPRISED THE OIT HAVE NOT GONE UNANSWERED. TO DATE, MORE THAN 82 PERCENT OF THE RECOMMENDATIONS HAVE BEEN COMPLETED. AND THE GOVERNOR REMAINS COMMITTED TO SEEING THIS EFFORT CONTINUE.

IN THE AREA OF TQM, THE RESULTS OF THE QSTP EFFORTS HAVE PAID OFF. AS WITH ANY NEWER TQM PROGRAM WE ARE NOT CHANGING THE WORLD BUT WE HAVE USED IT TO SAVE A FEW HUNDRED THOUSAND DOLLARS AND ELIMINATE 50,000 BUSY SIGNALS FROM OUR CUSTOMERS. A FEW EXAMPLES ARE IN ORDER.

THE FIRST EXAMPLE COMES FROM THE OHIO DEPARTMENT OF TRANSPORTATION(ODOT). IF YOU'VE EVER WATCHED A SNOW PLOW PUSHING THROUGH A DRIFT-FILLED HIGHWAY, YOU CAN IMAGINE WHAT PUNISHMENT THEY TAKE. THE BIGGEST - AND COSTLIEST - TROUBLE CAN OCCUR WHEN THE PLOW BLADE FAILS TO "BREAK" WHEN IT RUNS OVER A BRIDGE JOINT, RAISED PAVEMENT, OR BERM. AT ODOT'S DISTRICT 1, IN LIMA, THE SPIT TEAM (SNOW PLOW IMPROVEMENT TEAM) ANALYZED THE SITUATION AND CAME UP WITH AN INNOVATIVE WAY TO MAKE THE REPAIR AND PREVENT FUTURE PROBLEMS. THEY CUT COSTS BY 87% - AND WILL SAVE THEIR DISTRICT $33,000. ONCE THE IMPROVEMENT IS FULLY IMPLEMENTED THROUGHOUT ALL OF ODOT, SAVINGS COULD TOP $300,000.

ANOTHER GOOD EXAMPLE OF THE TQM PROCESS BEING PROPERLY UTILIZED COMES FROM THE BUREAU OF WORKERS'

COMPENSATION (BWC). WHEN MEDICAL PROVIDERS USE TO CALL THE BWC THEY HAD TO ENDURE LONG WAITS AND FREQUENTLY BUSY SIGNALS BEFORE GETTING THROUGH. NOT ANYMORE. A TEAM TURNED THINGS AROUND BY DEVELOPING AND IMPLEMENTING AN AUTOMATED PHONE INQUIRY SERVICE. NOW, INSTEAD OF WAITING FIVE MINUTES, MEDICAL PROVIDERS HAVE THEIR CALLS PICKED UP ON THE FIRST RING - THE FIRST TIME AND EVERY TIME. THE TEAM'S NAME SEEMS ESPECIALLY APPROPRIATE. THEY'RE KNOWN AS THE BUSY BREAKERS.

ON A FISCAL NOTE, THE THREE BUDGETS THAT THE GOVERNOR HAS DESIGNED REPRESENT THE LOWEST SIX YEAR GROWTH RATE IN 40 YEARS OF STATE SPENDING. AND TODAY WE HAVE 3,377 FEWER EMPLOYEES IN STATE GOVERNMENT IN THOSE DEPARTMENTS UNDER THE GOVERNORS CONTROL THAN WE DID WHEN HE TOOK OFFICE IN 1991.

TO BRING IT DOWN TO A MORE MICRO LEVEL I WILL ADDRESS THE CHANGES TAKING PLACE AT THE DEPARTMENT I AM CURRENTLY MANAGING, THE OHIO DEPARTMENT OF ADMINISTRATIVE SERVICES, MORE COMMONLY KNOWN AS DAS. DAS IS THE BUSINESS ARM OF STATE GOVERNMENT. WE DO THE PURCHASING, CONSTRUCTION, PRINTING, INVENTORY AND REAL-ESTATE MANAGEMENT FOR OTHER STATE AGENCIES AS WELL AS ADMINISTER THE STATE CIVIL SERVICE, COLLECTIVE BARGAINING, RISK MANAGEMENT AND EQUAL OPPORTUNITY LAWS. WE ALSO OVERSEE AND MANAGE THE STATES COMPUTER AND TELECOMMUNICATION SYSTEMS.

BY LAW WE HAVE A MONOPOLY ON SERVICE DELIVERY TO OTHER STATE AGENCIES. WHEN I CAME TO DAS A LITTLE OVER TWO YEARS AGO I FOUND WHAT ONE WOULD EXPECT TO FIND WITH ANY MONOPOLY... A SYSTEM THAT HAD NEVER NEEDED TO CHANGE BECAUSE IT WAS NEVER CHALLENGED. CLEARLY, SOMETHING NEEDED TO CHANGE.

SHORTLY AFTER BEING APPOINTED DIRECTOR I STARTED A FULL OPERATIONAL REVIEW. WE DECIDED TO DO SOMETHING THAT GOVERNMENT WAS NOT ALWAYS KNOWN FOR DOING, WE WENT OUT TO OUR CUSTOMERS AND ASK THEM WHAT THEY THOUGHT.

AFTER MANY MONTHS OF LISTENING TO OUR EMPLOYEES AND TRAVELING THE STATE TALKING TO OUR CUSTOMERS, WE EMBARKED ON A VOYAGE THAT WE TERMED DAS 2000, A NEW VISION FOR GOVERNMENT. SIMPLY PUT, THE DELIVERY OF CURRENT MONOPOLIZED SERVICES BY DAS IS BEING REPLACED WITH MORE COST COMPETITIVE WAYS OF PROVIDING SERVICES TO OUR CUSTOMERS. THE GOALS WERE AND CONTINUE TO BE FINDING WAYS TO ELIMINATE WASTE, DUPLICATION OF EFFORTS AND UNNECESSARY CONTROL OVER OUR CUSTOMERS.

EVERY FUNCTION DAS PERFORMS WAS EXAMINED AND EVALUATED FOR BOTH SERVICE LEVEL AND EFFICIENCY. IN CASES WHERE WE WERE ADDING UNESSESARY TIME AND MONEY TO VARIOUS PROCESSES WE REDUCED OUR INVOLVEMENT. FOR INSTANCE, CHANGES IN THE CONSTRUCTION ADMINISTRATION PROCESS WILL BRING THE TIME IT TAKES TO BUILD A NEW BUILDING DOWN FROM YEARS TO A LITTLE UNDER A YEAR.

WHERE OUR CUSTOMERS HAD THE ABILITY TO DO THINGS THEMSELVES WE TURNED OVER THE RESPONSIBILITY TO THEM. BY GETTING OUT OF THE WAY WE REDUCED THE PURCHASING PROCESS BY AS MANY AS 6 WEEKS. NOT ONLY ARE WE STREAMLINING PROCESSES BUT WERE IT MAKES SENSE, IN AREAS THAT WE CAN NOT COMPETE WITH THE PRIVATE SECTOR, WE ARE OUTSOURCING.

IN OVERHAULING MANY OF OUR RULES WE ARE ENCOURAGING COMMON SENSE PROBLEM SOLVING. A GREAT EXAMPLE IS IN THE AREA OF PURCHASING. WE PREVIOUSLY HAD 34 RULES, WE NOW ONLY HAVE 11. OUR SINGLE PURPOSE WAS TO SPEED UP THE PURCHASING PROCESS ALLOW EMPLOYEES TO THINK FOR THEMSELVES AND TO NOT TRY TO REGULATE FOR EVERY POSSIBLE BAD SITUATION THAT MAY OCCUR. THE RULES HAD BEEN LAYERED ON SO THICK THAT PEOPLE COULD NOT THINK, THERE WAS A RULE TO TELL THEM EVERY MOVE TO MAKE.

DAS 2000 HAS HAD A MAJOR IMPACT ON OUR BUDGET. THE DAS BUDGET WAS CUT BY 9% EACH FISCAL YEAR IN THE UPCOMING BIENNIUM, FOR A TOTAL REDUCTION OF $51.9 MILLION. THIS WAS AN ACTUAL REDUCTION OF 11% OVER OUR PREVIOUS YEARS BUDGET.

A FINAL PIECE OF THE PUZZLE WAS ADDED LAST MONTH WHEN THE LEGISLATURE PASSED, SENATE BILL 99, SIGNIFICANTLY CHANGING THE PURCHASING, PRINTING AND CIVIL SERVICE LAWS WE ADMINISTER. THESE CHANGES WILL RESULT IN AN ADDITIONAL SAVINGS OF 8 TO 10 MILLION DOLLARS A YEAR FOR THE TAXPAYERS OF OHIO.

FINALLY, OUR CHANGES ARE BEING ACCOMPLISHED AS A RESULT OF TEAMWORK. LABOR AND MANAGEMENT HAVE BEEN WORKING CLOSELY TOGETHER TO DETERMINE HOW TO REDUCE COSTS. CREDIT SHOULD BE GIVEN TO THE STATE EMPLOYEES UNION WHO TOOK A GIANT STEP OUT ON A LIMB TO FORM A PARTNERSHIP WITH US. THEY TOO UNDERSTOOD CHANGE WAS INEVITABLE AND THE OLD WAY OF DOING THINGS WAS NO LONGER ACCEPTABLE.

I COULD GO ON AND ON ABOUT THE DRAMATIC CHANGES WE ARE MAKING BUT TIME WILL NOT PERMIT THAT TO HAPPEN SO I WILL STOP HERE. I WOULD BE HAPPY TO ANSWER ANY QUESTIONS YOU MAY HAVE.

Questions for James Conrad

1) What were the qualifications used for placing companies and individuals on the Operations Improvement Task Force?

2) How exactly was the Operations Improvement Task Force organized, in terms of meetings and input?

3) Would you please go into more detail on the process and criteria you utilized to determine what departments, under the Governors control, were in need of restructuring?

4) In your testimony you referred to the Department of Administrative Services going out to its customers and asking their opinions of the quality of service delivery. Through what means was this accomplished (e.g., through the use of surveys, questionnaires, town meetings etc.)?

5) What role did managers and employees have in the DAS 2000 project?

6) In your testimony you talk about "allowing employees to think for themselves". We hope to do this on the federal level. However, I wonder if federal employees are afraid to take risks and do things differently because they fear being penalized if they make a mistake. Has this been a problem in Ohio?

7) Please describe how the legislative joint committee on regulations operates and whether in your experience it is an effective structure to encourage reduction of unnecessary state regulations.

8) What is your position on the elimination of each of the following federal departments: Commerce, Energy, Education and Housing and Urban Development?

1) Governor George V. Voinovich invited Ohio companies to participate on the Task Force by committing funds and/or personnel to staff task force teams. Companies were assigned to specific agencies, rather their personnel were placed where they could be most effective. For example an accountant for XYZ Company may have served on the Human Services Task Force, while a computer expert for the same company served on the EPA Task Force. In compiling teams, individuals were selected for their specific skills. For example, in the Department of Administrative Services, the Task Force Team included individuals knowledgeable in purchasing and personnel--two major areas of DAS operations. Also, while the OIT focused on procedure not policy issues, an effort was made to avoid conflict of interest, particularly in regulatory agencies.

2) The OIT was initiated when Governor Voinovich solicited Ohio Companies to help him put together a task force to assess state government operations. Once companies began signing on, a chairman and director were chosen to set up an office and do what was necessary to secure the funding and staffing necessary to run the OIT. First, high level managers were selected to act as agency group leader to oversee broad categories of government such as human service agencies. Next task force leaders were selected and assigned specific agencies and teams were formed accordingly. A leadership panel was created as a way to brief companies who invested in process.

Once each team was selected its members were given general training on what was expected during their management audits. Much emphasis was placed on documenting everything that was found or decided upon. Teams

used surveys and interviews; looked at fiscal records, annual reports, policies and procedure; and reviewed work processes to make their assessments and corresponding recommendations.

3) Governor Voinovich made it clear that each area under his control was to be given a thorough assessment. Teams did not enter agencies with preconceived notions that changes must be made. Through their assessments, they decided what changes were necessary to make operations run more efficiently.

4) When I Took over at DAS my first order of business was to send out a customer service survey. The survey accomplished two things, which in fact was actually mailed out on my first day in office. (It has since been mailed out on the same day every year.) The first was to set a baseline starting point so we knew exactly where we stood, the second thing was that it told our customers that we are serious about changing the focus of our organization. We also had a series of Town meetings throughout the state (13 in all). A method I utilized when I ran the Ohio Bureau of Employment Services was the questionnaire post card. With every piece of mail we sent out we attached a pre-postage comment card. We literally received hundreds of cards back a week and while not as quantifiable as a survey, it sure helped to let me know what the people interacting with us were thinking.

5) Those managers and employees who wanted to participate had a major role in the DAS 2000 project. As a matter of fact 70 to 80 percent of our legislative changes were employee suggestions on how the law needed to be

changed to provide better customer service. The remaining portions of the legislative changes were customer driven.

6) Employees have been scared to take risks at the state level in Ohio but our situation is no different than any other public, private or not for profit entity. Employees must have trust in management and if there is no trust or lack of an environment that encourages risk taking, change will never take place. The public sector is different in the sense that one can't reward employees for successes as they can in the private sector but on the other hand employees in the public sector are not as likely to lose their jobs if they take a risk and fail.

7) The committee you are referring too is the Joint Committee on Agency Rule Review and it is a body made up of legislators from both houses of the Ohio General Assembly. Every time an agency files a rule under Ohio Revised Code rule making authority public hearings must be held by the agency and then the rule is heard before JCARR. The committee either approves the rule or sends it back to the agency to be revisited. This process has worked both positively and negatively. In many instances it has served as the last chance for disaffected parties of a particular rule to be heard by someone other than the promulgating agency.

8) I have not interacted with these agencies and therefore do not have an opinion on whether or not they should be eliminated.

Mr. CLINGER. Thank you very much, Mr. Conrad, and please convey my regards to the Governor, who certainly was a champion and an outstanding leader in the unfunded mandates fight, and without whom we would not have achieved that victory. So I hope you will give him my very best regards.

Mr. CONRAD. I will.

Mr. CLINGER. Next, I am very pleased to recognize Dr. Rasey, if I may. Is that pronounced right?

Dr. RASEY. Yes, that is correct.

Chairman Clinger, Congressman Stokes, Congresswoman Collins, Congressman LaTourette and other members of the Reform and Oversight Committee, thank you for inviting me to testify before your committee today.

The Greater Cleveland Growth Association applauds the Congress' efforts to reduce the Federal deficit and your committee's efforts to streamline and reform the Federal Government.

We must all learn to use available resources more effectively and efficiently and to work in partnership between levels of government, the private and non-profit sectors and the community to achieve our public policy aims. Partnerships are especially valued because they promote collaborative solutions and coordinated use of resources, public and private, in addressing problems of scale.

The Growth Association, with nearly 16,000 members, is primarily concerned with issues of economic growth and job creation. There are five issue areas based on our work priorities for 1995 and 1996, where the Federal Government is most needed, where Federal program funding should be sustained at or near current levels. These categories are technology infrastructure, job training, small business, the core city—in this case the city of Cleveland and other urban cities—and transportation and infrastructure.

I will limit my remarks to just three areas—technology infrastructure, job training and the core city, though my written testimony addresses all five.

Technology infrastructure—while the rate of decline in the Cleveland manufacturing center is converging with the national average, it is still a very large part of the area's and region's economy. To sustain the manufacturing base and support emerging industries, a substantial infrastructure has evolved in Greater Cleveland over the last 10 years. Ongoing Federal support for this infrastructure is viewed as critical to industry expansion and retention. Private companies today, both large and small, compete in global markets. To be successful, R&D must be focused on the short term, 1 to 2 years; the intermediate term, 3 to 5 years; and the long term, 10 to 20 years. These intensified demands are exacerbated by country-to-country differences in public and private investment in both generic and applied research and development. The United States today fails miserably in its public and private commitment. As a Nation, the United States ranks 19th or worse in both categories.

I have two suggestions: First, Federal investment in generic and applied R&D and deployment should be sustained to improve United States competition with our leading foreign competitors and emerging foreign competitors—for example, China.

Examples of Federal programs that provide direct or indirect support for R&D in greater Cleveland include the Commerce De-

partment's Advanced Technology Program and the Manufacturing Extension Partnerships Program.

In greater Cleveland, the Cleveland Advanced Manufacturing Program, (CAMP), one of the first MEPS selections, offers a wide variety of services to over 9,000 members. CAMP's affiliate, the Great Lakes Manufacturing Technology Center, has completed 750 technology programs with an estimated savings of $54 million to area manufacturers. Separately, the EDA's in Commerce, Title IX, Economic Adjustment Grant Program, supports the infrastructure and direct development of technology districts and incubators.

Other Federal agencies—Health and Human Services, Veterans and the National Science Foundation—support generic research in emerging industries in the Cleveland area, such as aerospace, biomedical, biotechnology and advanced materials—for example, polymers.

Two lesser known SBA programs are also important. The Small Business Innovation Research Program provides contractual opportunities for innovations aimed at addressing Federal R&D needs across the board in terms of Federal agencies. The Small Business Technology Transfer Program funds partnerships between universities, other non-profit research institutions and small businesses. In addition to direct Federal program support, the NASA Lewis Research Center, located in Cleveland, is the region's preeminent R&D facility and places the State of Ohio as a leader in aeronautics and aerospace research.

My second suggestion is that private investment in R&D should be expanded through the permanent extension of the research and development tax credit for private companies and a reduction in the capital gains tax rate for private companies and individual investors.

I will shorten my comments on job training. We got an excellent introduction and remarks from Secretary Martin. My recommendations in that area are two-fold. While agreeing that Federal program consolidation is needed, it is important that the overall level of funding for job training programs and school-to-work program initiatives be sustained and that their targeting to special populations, to the extent possible, be retained as well; for example, through set-asides within the block grants.

Second, most importantly, develop market clearing mechanisms for matching employers with job seekers. The program I am aware of is in Commerce, it is their Information Infrastructure Grant Program. I was with an official from that agency the other day, they are swamped with applications for a very small pot of money.

Last, the core city, the city of Cleveland. While Cleveland has made great strides in the past decade as a come-back city, as reported by our mayor, there are still major divisions. And there are hopeful signs, as the mayor commented, on the new home construction and the activity—more new construction than loss of inventory, I believe. But more is needed. At the same time, we have to be honest in expecting that Federal funding coming to Cleveland and other large urban cities is likely to deteriorate in the wake of budget-cutting underway in the 104th Congress. Further, as control over the substate allocation and use of Federal block grants is

transferred to the States, there is added concern over what will be available to address core city problems.

My recommendations—first, existing Federal programs which stimulate economic growth in distressed communities must be sustained. By sustained, what I mean is that these programs must be kept in one form or another. We acknowledge that budget cuts will happen, but we want to see those programs coming to Cleveland and other cities.

An area of great need in this area is the reclamation of former industrial sites or "brownfields." Here, I should thank Congressman Stokes for arranging a delegation meeting earlier this week on the subject, and also thank Congressman LaTourette for actively participating in the meeting.

Second, Federal investment in job training and educational programs which motivate and prepare disadvantaged youth and unemployed or under-employed adults in core cities must be maintained and sustained. These programs span the Departments of Education, Labor, and Health and Human Services.

Third and finally, housing reinvestment in core cities by existing owners should be encouraged by the Federal Government on the tax side by the removal of the current tax penalty that results from capital gains payments on homes purchased which cost less than the homes sold in suburban markets.

In conclusion, I admit that what I have recommended sounds very much like a laundry list. Unlike prior years, however, it is not focused on special purpose funding requests. Instead, my testimony identifies existing Federal programs and program areas that we believe are vital to economic growth and job creation. As much as I would like to, I am not asking that these programs be exempted from current budget cutting. Nor am I saying that some of them should not be consolidated into block grants. My primary purpose this morning is to let the members of the committee know the areas where Federal programs and program targeting are most helpful in supporting economic growth and job creation in the city of Cleveland, greater Cleveland and northeast Ohio.

I should add that the Growth Association is committed to working in partnership with the Federal Government and other levels of government in seeking solutions and in sharing resources.

Thank you.

[The prepared statement of Dr. Rasey follows:]

Revised
7/27/95

Testimony of Keith P. Rasey
Director, Federal Government Relations
Greater Cleveland Growth Association

before the

U.S. House of Representatives
Committee on
Government Reform and Oversight

Greenbriar Theater
Parma Heights, Ohio

July 14, 1995

The Greater Cleveland Growth Association supports current Congressional efforts to reduce the federal deficit. The Growth Association also supports Legislative and Executive Branch initiatives aimed at streamlining federal government as a means of reducing the deficit.

In the present budgetary environment, we must all learn to how to do more with less, use available resources more effectively and efficiently, and work in partnership — between levels of government, the private and nonprofit sectors, and the community — to achieve our public policy objectives. Partnerships are especially valued because they promote collaborative solutions and coordinated use of resources, public and private, in addressing problems of scale. Further, in partnership, there is ultimately a shared understanding of what's needed, what's possible, and who can get the job done. Finally, partnerships are mediative in nature — which helps to overcome partisan positions.

As a business association, with nearly 16,000 members, our primary goals are economic growth and job creation. It is our purpose to make a quantifiable, measurable, and significant change in the economic condition of our city and Northeast Ohio. We also believe that the federal government must be involved in partnership with us and other state and local participants.

Greater Cleveland Growth Association
200 Tower City Center • 50 Public Square • Cleveland, Ohio 44113-2291
(216) 621-3300 • FAX (216) 621-6013

In 1995-1996, the work priorities of the Growth Association are, as follows:

1. Revitalizing the manufacturing base;

2. Increasing the number of formations and expansions of small- to mid-sized companies;

3. Increasing growth in high-wage, high-growth service and technology sectors

4. Creating a more efficient and unconstrained labor market;

5. Improving the region's capabilities in the movement of goods and people

6. Restoring economic vitality in the city;

7. Increasing female and minority participation in the economy; and

8. Enhancing the image of Cleveland as a visitor destination of choice.

While each of the eight priorities is supported in one way or another by government, there are five issue areas, based on the work priorities listed above, where federal government support is most needed, and where, in present Congressional deliberations, program funding should be sustained at or near current levels. These categories are: (1) technology infrastructure; (2) job training; (3) small business; (4) core city; and (5) transportation and infrastructure. They have importance for the city of Cleveland, Cuyahoga County, the primary and consolidated metropolitan area, Northeast Ohio, and in most cases, the state of Ohio and the Midwest. Each is addressed below.

I. TECHNOLOGY INFRASTRUCTURE

Background

While the rate of decline in the Cleveland manufacturing sector is converging with the national average, it is still a very large part of the area's and region's economy. To sustain the manufacturing base and support emerging industries, and to support growth in high technology service sectors (e.g., banking and health care), a substantial technology infrastructure has evolved in Greater Cleveland, Northeast Ohio, and the state of Ohio over the past ten years. This infrastructure supports both basic and applied research, deploys research results including opportunities for commercialization, and helps to attract both short- and long-term capital for business ventures.

Contributors to this infrastructure have included federal and state governments, public and private foundations, and other private and nonprofit sector institutions and organizations. Each sector remains a key component in sustaining the infrastructure. Federal support of basic and applied research and the deployment of results, including the expansion of the information superhighway, is viewed as critical.

Issue

Private companies today, both large and small, compete in global markets. To be successful, R&D must focus on the short term (1-2 years), intermediate term (3-5 years), and long term (10-20 years). These intensified demands are exacerbated by country-to-country differences in public and private investment in generic and applied R&D. The U.S. today fails miserably in both public and private levels of investment, ranking 19th or worse in both categories.

Recommendations

1. **Federal investment in generic and applied R&D and deployment must be increased to improve U.S. competition with our leading foreign competitors (e.g., West German and Japan) and emerging foreign competitors (e.g., China).**

   Examples of federal programs that provide direct or indirect support for R&D in Northeast Ohio include the Commerce Department's Advanced Technology Program (ATP) and the Manufacturing Extension Partnerships program (MEPs). In Greater Cleveland, the Cleveland Advanced Manufacturing Program (CAMP), funded by the MEPs program, offers a wide variety of services to over 9,000 manufacturers. CAMP's affiliate, the Greater Lakes Manufacturing Technology Center has completed 750 technology programs, with an estimated savings of $54 million to manufacturers Separately, the EDA's Public Works and Title IX Economic Adjustment grant programs support the development of technology parks and incubators for emerging industries.

   Other valued federal involvement, by administering agency, includes:

   Commerce

   - Information Infrastructure Grants

   Defense

   - Technology Reinvestment Program (TRP)

Health and Human Services

- Generic medical research (supporting emerging biomedical/biotechnology industry)

National Science Foundation.

- Generic research funds (supporting emerging industries, e.g., polymers, and other advanced materials, sensors, biomedical/biotechnology, and aerospace)

Small Business Administration

- Small Business Innovation Research (SBIR) program (that provides contractual opportunities for innovations aimed at addressing federal R&D needs across agencies including Commerce, Defense, Transportation, EPA, and NASA)

- Small Business Technology Transfer (STTR) program (that funds partnerships between universities, other nonprofit research institutions, and small businesses)

Veterans Administration

- Biomedical research funds (including intramural funding from Defense and the National Institutes of Health) that support an emerging biomedical/biotechnology industry

In addition to direct program support, the NASA-Lewis Research Center is the region's preeminent R&D facility, and places the state of Ohio as a leader in aeronautics and aerospace research. Current efforts are underway to establish a commercialization center in the Cleveland area to secure economic development benefits from NASA technology spin off.

2. **Federal support for basic tools to facilitate technology-based business development, especially in urban areas, should be expanded.**

Commerce (Economic Development Administration)

- Programs to assist in building the Cleveland Technology District and other technology parks to retain the benefits of commercialization of research in the urban core.

- Technology investment funds to fill the gap between basic research funding and private investment.

3. **Private investment in R&D should be increased through the permanent extension of the Research and Development Tax Credit for private companies and reduction in the capital gains tax rate for private companies and individual investors.**

II. JOB TRAINING

Background

Workforce quality is a key consideration in choosing a location for business investment and a critical factor for successful operation.

Issue

The educational attainment of the region's work force (a measure of labor force quality) lags behind other comparative regions. Further, demand for highly educated workers is growing, and high-wage jobs require increasing levels of educational attainment. Overall, there is a major imbalance between unfilled demand and qualified job seekers.

Recommendations

1. While agreeing that federal program consolidation via block grants through the states is appropriate, **it is important that the overall level of funding for job training programs and school-to-work program initiatives be sustained, and that targeting to special populations be retained — through set-asides, by example.** Valued federal programs include, by administering federal agency, the following:

   Education — Programs that address transition to jobs, including:

   - Vocational and Adult Education,
   - School-to-Work, and
   - TRIO programs (e.g., Upward Bound).

   Health and Human Services

   - Job Opportunities and Basic Skills Training Program (JOBS) (provides education, training, job-search, and other supportive services to AFDC recipients)

Labor

- Job Training Partnership Act (JTPA) programs (that address adult employment needs, including the job training needs of the disadvantaged and retraining for dislocated workers)

- Trade Assistance programs (job training for persons experiencing a reduction in hours worked, or reduced wages, e.g., because of increased imports)

2. **Develop market clearing mechanisms for matching employers with job seekers.**

Commerce

- Information Infrastructure Grants (Telecommunications and Information Infrastructure Assistance Program). This program should be substantially expanded given the enormous level of demand.

III. SMALL BUSINESS

Background

Small businesses play important roles in local and regional economies, not only in established industries as suppliers and subcontractors, but in emerging industries where venture capital is usually scarce. Small businesses are also a major source of new jobs.

Issue

The failure rate for new small businesses is high, and most job growth usually occurs after four years in the life of a start-up company. As such, they need nurturing during the maturation process, especially as they expand in size and venture into new markets and product lines. The Cleveland metropolitan area has been less successful than peer cities in creating and nurturing new businesses.

Recommendations

Improve the early survival rate of new small businesses by:

1. **Supporting their early development and growth by sustaining the following federal programs and initiatives:**

Commerce

- Enterprise Development (e.g., Minority Business Development Centers) [The latter provides one-stop centers for minority-owned businesses.]
- International trade initiatives
- Manufacturing Extension Partnerships (MEPs)
- Information Infrastructure Grants

Labor

- Job Training Partnership Act (JTPA)

Small Business Administration

- Small Business Development Centers (SBDCs) and other training and technical assistance programs

2. **Improving their access to capital by sustaining the Small Business Administration as a source of small business loans, e.g., 7(a) and 504, and international loan programs such as the International Trade Loan Program and Export Revolving Line of Credit**); and

3. **Creating a more supportive business environment on the tax side, including**:

   - A reduction in the capital gains tax rate;
   - Reductions in subchapter C/S corporate tax rates to enhance income retention and reinvestment; and
   - Removing the "principal place of business" restriction on home office deductions.

IV. CORE CITY

Background

While the city of Cleveland has made great strides in the past decade as a comeback city, it remains largely divided — in terms of race, incomes, and other factors which separate east-side from west-side and the core city from suburban areas. The current economic situation in the core city is characterized by high poverty, high unemployment, low educational attainment, and high out-migration.

While there are hopeful signs — new home construction activity, empowerment zone designation, and magnet schools in the sciences, medical field, the arts, etc. — in aggregate, not enough is being done to fundamentally change the above relationships. An ongoing, committed public-private-community partnership is needed to move forward with an agenda that will bring prosperity and security to all of our citizens.

Issue

The amount of federal funding coming to Cleveland and other core cities is likely to deteriorate in the wake of budget-cutting underway in the 104th Congress. Further, as control over the sub-state allocation and use of federal block grants is transferred to the states, there is added concern over what will be available to address the problems of core cities.

Recommendations

1. **Existing federal programs which stimulate economic growth in distressed communities must be sustained.** Examples of these programs, by administering federal agency, include the following:

   Commerce (EDA)

   - Economic Adjustment Grants (Title IX)
   - Competitive Communities concept
   - Enterprise Development (Minority Business Development Centers)

   EPA

   - Superfund (or separate "brownfield" legislation) which provides financial assistance for the environmental assessment and inventorying of non-priority list sites, their cleanup and redevelopment, for industrial, commercial, residential, and mixed uses
   - Environmental Finance Center Program

   Housing and Urban Development

   - Community Development Block Grants
   - Empowerment Zones

Small Business Administration

- Loan programs for disadvantaged small businesses

2. **Federal investment in job training and educational programs with motivate and prepare disadvantaged youth and unemployed or underemployed adults in core cities must be sustained.**

Education

- Elementary and Secondary Education Act (targeted to core city schools)
- Vocational and adult education programs
- Urban Community Service Program (mobilizes resources of urban universities in solving problems in low-income communities)

Health and Human Services

- Job Opportunity and Basic Skills (JOBS) program

HUD

- Family Self-Sufficiency Program (in which unemployed residents in federally-assisted housing enter 5-year contracts to pursue education, training, and ultimate employment, in return for housing and other supportive services)

Labor

- Job Training Partnership Act (JTPA) programs

3. **Housing reinvestment in core cities by existing owners should be encouraged on the tax side by the removal of the current tax penalty that results from capital gains payments on homes purchased which cost less than the homes sold.**

V. TRANSPORTATION AND INFRASTRUCTURE

Background

Cleveland's central location provides significant potential for it to become a major regional center of trade and commerce.

Issue

Access to domestic and international air service in Cleveland is limited when compared to other metropolitan areas. Compared to peer cities, Cleveland has not realized its full potential in travel- and tourism-related revenues. Further, public transportation in Cleveland is not fully used and expensive to operate.

Recommendations

1. **Enhance intra-regional transportation infrastructure, through the following programs and related activities:**

   Transportation

   - Federal Highway Administration programs (full and timely expenditure of Transportation Trust Fund revenues — currently Ohio is receiving only about 60% of the federal gas taxes collected within the state)

   - Federal Railroad Administration — In the short run, capital funds are needed to help acquire railroad rights-of-way associated with the Cleveland-Akron-Canton commuter rail program. In the long run, capital and operating support are needed for regional and intra-regional rail operations.

   - Federal Transit programs — Currently, capital and operating funds are combined in the federal budget, making it very confusing because outlays include multiple-year capital projects. This issue applies across all transportation and infrastructure programs.

   Defense

   - Army Corps of Engineers activities are important to sustaining trade through the Port of Cleveland and on the Cuyahoga River. Current needs include funding ($14 m.) for bulkheading at the mouth of the Cuyahoga River.

2. **Improve domestic/international air service through Federal Aviation Administration programs.**

3. **Assure adequate infrastructure to support economic development in the core city, e.g., bridge maintenance and reports and brownfield environmental assessments and cleanup.**

CONCLUSION

Yes, the above has all the aspects of being a laundry list. Unlike other years, however, it is not focused on special purpose funding requests, but instead, it identifies existing federal program and other federal activities that we believe are vital to economic growth and job creation.

As much as we would like to, we are not asking that these programs be exempted from current budget cutting. Nor are we saying that some of them shouldn't be consolidated in block grants. Our primary purpose is to let members of Congress know the kinds of federal programs and program targeting that are most helpful to supporting economic growth and job creation in the city of Cleveland, Greater Cleveland, and Northeast Ohio.

Finally, we are committed to working in partnership with the federal government and other levels of government — in seeking solutions and in sharing resources. A good example of this, albeit tentative in nature, are collaborative efforts underway to reclaim former industrial sites (brownfields) and reuse them for technology districts to support emerging industries. Direct benefits include new jobs (in the cleanup, new businesses created, and service jobs created to support the enterprises). Indirect benefits include enhanced public services resulting from increased city tax revenues and the preservation of greenfield sites.

Thank you.

-- End --

U.S. House of Representatives
Committee on Government Reform and Oversight
Hearing on July 14, 1995
Parma Heights, Ohio

Testimony of Dr. Keith P. Rasey

Additional Questions and Answers

1. ***In your prepared statement you express concern that the educational attainment of the American workforce lags behind other industrial nations, and you advocate the use of federal job training programs. Do you believe any of these programs should be designed, administered or financed in part by states and localities?***

The anticipated consolidation and "blockgranting" of federal job training programs by Congress will no doubt assure greater flexibility in the design and administration of job training programs at the state and local level. Local control over design and implementation, if done in collaboration with area employers, should be responsive to local labor market needs. On the other hand, prospects for state and local funding for job training are much more difficult to assess owing to diversity of policy and level of available resources between jurisdictions.

My major concern with "blockgranting" federal programs is the potential for "spreading" across the population which limits the amount of program funds benefiting originally targeted "in need" populations, e.g., the unemployed and underemployed in core areas of center cities. Program consolidation and greater state/local discretion must therefore be carefully balanced with needs targeting to assure the effective distribution of program benefits.

2. ***Do you think job training programs should be targeted to areas with higher unemployment?***

Federal job training resources should be targeted to areas of high need. High unemployment is only one indicator of this need and may reflect cyclical or frictional unemployment at the time of measurement. Other measures, such as labor force participation rates, particularly among population sub-groups, e.g. women, minorities, or disadvantaged youth), should also be considered to ensure that federal resources are targeted effectively in dealing with structural unemployment and underemployment.

Greater Cleveland Growth Association
200 Tower City Center • 50 Public Square • Cleveland, Ohio 44113-2291
(216) 621-3300 • FAX (216) 621-6013

3. ***What is your position on the elimination of each of the following federal departments: Commerce, Energy, Education, and Housing and Urban Development?***

I would prefer to answer this question is terms of what functions are appropriate at the federal level, and limit my remarks to the Greater Cleveland Growth Association's working priorities.

First, the federal government is best positioned to promote and facilitate international trade by U.S. firms. Also, because of its taxing powers and the fact of global competitiveness intensified by central government investment in R&D, we must do likewise by increasing both public and private investment in basic and applied technology development and deployment. At present, such investment levels, as a percent of GNP, are well behind our major competitors (Japan and West Germany) and likely to rapidly fall behind newer competitors (e.g., China). The Commerce Department is a logical, centralized agency in which to coordinate such activities.

Second, the federal government must commit resources to preparing/upgrading the workforce to compete in the global economy and address structural employment issues (see above). This suggests that the Departments of Education and Labor must remain involved. Education must continue to concern itself with school-to-work transition. With regard to job training, I strongly support the consolidation of federal job training programs, presumably at Labor. With consolidation, it may also be desirable to establish an advisory commission made of representatives from federal agencies currently administering job training programs, private sector employers, and labor to assure policy coordination.

Third, because of the limited resources of our older, urban cities, and because of limited state intervention and resource availability, the federal government must retain responsibility for caring about America's cities. Therefore, while the Department of Housing and Urban Development may well need reorganizing, it should continue to exist as a major resource and technical assistance provider to urban cities, and as the federal government's lead policy maker on urban issues.

Prepared: July 27, 1995

Mr. CLINGER. Thank you, Dr. Rasey.

Now I am pleased to recognize Claire Freeman, the CMHA chief executive officer for 5 minutes.

Ms. FREEMAN. Good afternoon, Chairman Clinger and all of the other Members of the Congress. Thank you for inviting me to be here. As mentioned by the chairman, CMHA was severely troubled less than 5 years ago. HUD has a public housing assessment management tool that grades public housing authorities. In 1990, we probably would have received a grade of 30 out of 100. In 1991, we scored a grade of 53. In 1994, we are at 81 and we hope to be a high performer in the years to come, that would be over 90.

This dramatic recovery was built on the application of sound professional and business practices to a deteriorating public agency. It is a wonder that the agency was still standing, actually. And we implemented these business practices by institutionalizing a holistic approach to addressing resident needs and changing the orientation of the agency to customer service, where all employees of CMHA know that the residents of public housing are our customers. It might be a simple concept, but believe me, it was a complex task to implement.

Before I give you highlights on some of our innovative programs and techniques, let me just go over a little bit about what we found when we entered CMHA. We were on credit hold across the county. We had dangerously deteriorating infrastructure. We had gas pipes that were so corroded because of the steam heat systems that were over 60 years old, that we could have had an explosion at any time. We had buildings that had the original paint—that is 1937 paint. And we had a work force that, without question, was low productivity, low morale and everything negative you can think about a work force. No leadership.

We had high vacancies, low rent collection. As I shared, severely deteriorated housing stock, and I have to say that 40 years of deferred maintenance is not benign neglect, but malicious neglect of a national asset. What we did though, we brought in an organization that I had become acquainted with at the Department of Defense—Sage Analytics. They have a failure avoidance technology. They applied that failure avoidance technology to the Gulf war for the Department of Defense, to American Airlines in terms of bad baggage handling. They were now interested in putting their technology to work in public sector institutions. We used their failure avoidance technology to assess and correct the weaknesses that we found at the Authority. Interesting enough, the failure avoidance study told us that the No. 1 priority for us, no matter if we were good at everything else, if our maintenance people were not respectful and responsive to the residents, we would fail.

So with that information, we moved forward with a customer service driven business plan. And with this redefined mission, we had a number of concurrent strategies. And to summarize, most importantly was the establishment, if you can believe this, of an automated management information system throughout the Authority, so that I could, from my office on my office computer, know what was happening throughout the Authority at every 1 of the almost 12,000 units in the Authority. And we also implemented hand-held computers so that when that maintenance man went

into the apartment, he could input accurately all that was wrong with that apartment and put the information instantly into the system. Simple things like telling the workmen if you keep your tool kit together for 3 years, you will own it. Guess what, we stopped losing tools.

And another very important thing for the residents was safety. Public housing has been preyed on like vultures by the criminal element. Public housing residents were begging for a safe environment. You might know that 85 percent of people arrested in public housing neighborhoods do not live there. The city of Cleveland recently did a look at, by address in the city, who has a warrant out for their arrest. In all of the city of Cleveland, only 51 public housing residents out of 11,200 families had a warrant. In our Section 8 low-income population, 8,000 strong, only 139 had a warrant. So the idea that public housing is infested with criminal people living there is just absolutely not true.

So we reorganized to be customer driven, we decentralized operations and we addressed the security issue by increasing our security force from 14 in 1990 to 268 today.

We have also instituted a very aggressive, award-winning architectural master plan process where we are taking these deteriorated, crime-infested, poorly designed, poorly built public housing buildings and turning them into defensible spaced villages. You have I think in front of you a picture that shows a before and after. You will see a hallway at the notorious "Dodge City" King Kennedy Estates where the gangster can run into one door and run out the back eluding police. And you can see a very drab, ugly building. And if you look at the bottom, that is what our modernization effort has turned that building into. We have eliminated all three story walk-ups, so that every single resident has their own front porch, their own defensible space. It is their house, it is their village, they can defend it.

Mr. SCHIFF [presiding]. Ms. Freeman, I have to ask if you could wrap up now.

Ms. FREEMAN. Sure.

Mr. SCHIFF. I want to emphasize to you and to all the witnesses that your entire written statement will be made a permanent part of this record.

Ms. FREEMAN. Thank you. In closing, let me say that if we care—if this country cares at all about preventing dependence and a sharing and opportunity for disadvantaged individuals to become tax-paying, law-abiding citizens, I ask that you and your fellow Congress persons not be short-sighted in your reform work to make our government more efficient. We must work on making government programs more effective, but poorly thought out drastic budget cuts and the elimination of departments or programs that are currently unpopular may indeed not create an increase in the number of law-abiding taxpayers. Indeed the long-term cost of prisons, orphanages, juvenile facilities and mental institutions will far surpass the cost of existing programs. Many of these programs, like any private home or business are long-term investments that must be kept over time, so that they can make a measurable difference in the lives of the less fortunate of this country. Thank you.

[The prepared statement of Ms. Freeman follows:]

Claire E. Freeman

Chief Executive Officer

Cuyahoga Metropolitan Housing Authority

Good morning/afternoon. I'm Claire Freeman, and I've been the Chief Executive Officer (CEO) of the Cuyahoga Metropolitan Housing Authority (CMHA) in Cleveland, Ohio since 1990. Prior to my arrival here, I served as Assistant Secretary for Administration at the U.S. Department of Housing and Urban Development, and as Deputy Assistant Secretary for Civilian Personnel Policy at the U.S. Department of Defense.

As the CEO at CMHA, I manage a $100 million annual operating budget, a $301 million modernization budget and a workforce of 1500 employees. After being operationally and financially troubled for over 15 years, CMHA received recognition in 1994 for the greatest rate of positive change in the nation.

The U.S. Department of Housing and Urban Development (HUD) has created national standards for measuring the performance of housing authorities called the Public Housing Management Assessment Program (PHMAP). A score of at least 60% is needed to be considered standard. For improving our PHMAP score from 53% in 1991 to 81% in 1994, HUD presented CMHA with two awards: The Removal of Troubled Designation Award and the Greatest Improved Performance Award for very large public housing authorities (over 6,000 units).

This dramatic recovery was built on the application of sound professional business practices to a deteriorating public agency. It was implemented by institutionalizing a holistic approach to addressing resident needs, and changing the orientation of the agency to customer service, where all employees of CMHA know that the residents of public housing are our customers!

It might be a simple concept, but believe me it was a complex task to implement. Before I give you the highlights of some of our innovative programs and techniques, let me briefly describe CMHA and the conditions that I inherited.

The CMHA was founded in 1933 as the first public housing authority in the nation. It is a political subdivision of the State of Ohio whose purpose is to provide safe, decent and affordable housing for eligible low income households. CMHA owns and operates over 11,200 units of public housing, and administers certificates and vouchers for over 8,400 Section 8 units. HUD is the primary funding source and regulator for our housing programs.

When I was appointed CMHA's Executive Director in 1990, the agency was extremely troubled in all aspects of housing operations. There was a dearth of leadership, low staff morale, poor financial management, poor routine and preventive maintenance, increasing criminal activity and an unclear mission. These factors contributed to high vacancies, low rent collections, a severely deteriorated housing stock, and overall poor service to residents.

One of the first things we did to get our "house" in order was to conduct a strategic planning process based on a failure avoidance methodology to assess and correct the weaknesses at hand. Interestingly enough, the failure avoidance study told us that if we didn't improve our relationship with the residents, it wouldn't matter how well we did everything else.

With our mission redefined, we then designed a multi-faceted business strategy, whose basic components were to be carried out concurrently.

1. Administratively, we put operational systems into place; we installed an integrated management information system that facilitates cost reductions and resource redirection; we straightened out the bookkeeping in order to identify a cash reserve where everyone thought a deficit existed; and we established credibility by paying our bills on time.

2. In terms of maintenance, we provided training programs, uniforms and tools to properly equip our staff; we decentralized operations into eight regions and emphasized the customer approach as the heart of our mission; and we formed partnerships with our union employees to internalize the principles of Total Quality Management.

3. We addressed our security issues head on by increasing our security staff from 14 to 268, providing specialized training, and strengthening police leadership by hiring and promoting experts in community policing and administration; we also incorporated the components of defensible space into our modernization efforts.

4. Although we continued and expanded our major construction efforts to reduce long-standing maintenance needs, we also focused attention on curb appeal projects; like fencing, landscaping, and renovating lobbies, which demonstrated visible and measurable results to our residents and the greater community.

5. Perhaps our most unique actions, however, were those centered on resident empowerment, which provided them with increased opportunities for self-management, community service and economic self-sufficiency. We knew that our business was housing. We also knew that the Greater Cleveland community included many experts in the areas of health, life skills, family intervention, job skills and business opportunities. We began forming partnerships to address holistic issues, and we began experiencing remarkable successes.

Let me tell you about one of our success stories that happens to demonstrate several aspects of our recovery strategy. Renaissance Village is a recently renovated part of our King Kennedy estate which had not so affectionately been referred to as "Dodge City". The redesign of these three story buildings eliminated common stairwells and provided every unit with its own front door. Combined with fencing and landscaping improvements, Renaissance Village's defensible space design has all but eliminated crime, and recently received front page coverage by the Chicago Tribune as an example of public housing that works.

But the other half of the story involves the residents of Renaissance Village, who met and bonded over their goals of maintaining a safe, decent home for their families. Out of their shared vision and a growing pride in their new homes, these residents wrote a covenant that calls for a sober, supportive lifestyle and the commitment to cooperative community living. This covenant is a key example of how residents lives and attitudes have been changed by participating in a process that is designed to empower them.

And that's only the beginning of this story. Renaissance Village and CMHA's commitment to the Power of Partnerships resulted in winning the first HUD Urban Revitalization Demonstration Grant (HOPE VI) for $50 million in the country. It is being used to address physical, social, and economic ills in the Central area of Cleveland, and the involvement of the residents is at its very heart.

This is but one example of CMHA's successful innovations. Another that I have to mention is our nationally recognized Miracle Village, a drug treatment program for mothers and their children located in the middle of one of our largest inner city estates. Our partnership with MetroHealth has enabled many families to turnaround their lives in such a dramatic way that it is beyond description.

I could go on, but our time is limited, so I hope that I've conveyed some part of our vision for the transformation of public housing to you. Our holistic approach has been the key to our success and is based on the simple investment strategy that "you can pay me now, or you can pay me later." I have offered you some real examples in the value of making long term investments in not only the physical inventory of public housing, but also in the lives of the residents who live in public housing.

When it concerns physical structures, the less money spent on preventive maintenance as the building ages, the more it will cost to renovate it later. And there is no difference on the human side, the less spent on training and education, the more it will cost society later in terms of crime and maintaining prisons or welfare systems.

In closing, if you care at all about preventing dependence and assuring an opportunity for disadvantaged individuals to become tax paying, law abiding citizens, I ask that you and your fellow Congressmen not be short sighted in your reform efforts to make our government more efficient. We need to work on making government programs more effective. Dramatic budget cuts and the elimination of departments or programs that are currently unpopular, or shifting responsibilities to unprepared state governments, will not increase the number of taxpayers.

Indeed, the long term cost of prisons, orphanages, and mental institutions will far surpass the cost of existing programs. Many of these programs, like any private home or business, are long term investments that need to be kept up over time, so that they can make a measurable difference in the lives of lower income families. As in the 1940s, 1950s, and 1960s, poor families can get their feet on the ground by living in public housing, where the average stay is six years, and then move on to economic self-sufficiency and homeownership. Isn't that still the American dream?

Thank you for allowing me the opportunity of testifying before you today.

Mr. SCHIFF. Thank you, Ms. Freeman.

Before recognizing the next witness, I would like to just take a moment and say, to both the panelists and the audience, if you have never seen a congressional hearing before, the interchange of members might be a little bit disconcerting, because at various times members might need to be in the other room. And that is because we have a myriad of things going on at any one time and we may have to be calling back to Washington and dealing with other issues, this being a business day there also.

What I want to emphasize to everyone, however, is that the gentleman with the mask at the front of the stage here is not there to rob us, that is not why he is wearing the mask, he is recording every word that is being said and spoken here. And that, combined with all of the written statements, is put together into the permanent record of this hearing, and it is then made available at a certain point to every Member of Congress. So I want to assure you that everything that is written and everything that is spoken ultimately gets to the entire Congress and everyone should feel confident that everything that they wish to present will reach the right place.

With that, I would like to recognize the Honorable Daniel Whitmire, who is the Township Trustee of Austinburg Township, OH.

Mr. WHITMIRE. Chairman Clinger, committee, Mayor Cassidy and Congressman LaTourette, I would like to especially thank you for having me here today to represent grassroots government.

First of all, I believe that the Federal Government should be a partner to grassroots government and not an obstacle. Good common sense legislation will ensure that the government serves the people.

Austinburg Township is a small rural township of 25 square miles with a population of approximately 2,300 people. We in township government have three trustees, one clerk as elected officials, 29 miles of road, two parks, one town hall, two zoning boards, an all-volunteer fire department of 29 people and we run that on $367,000 a year.

In 1990, the Coffee Creek Industrial Park, which consists of 10 5-acre parcels, sat mostly idle and undeveloped due to extremely poor communications and cooperation at the local level. The zoning was updated to meet and satisfy requirements in all areas, but after Coffee Creek Industrial Park lost a potential sale due to inadequate infrastructure, the trustees determined that a plan for infrastructure development should be the next step.

At this point, the Austinburg Township elected officials began to communicate with local and State officials to look for grants, matching funds and loans. Thanks to community development block grant funds money, Coffee Creek Industrial Park now has a wastewater treatment plant, a new water tower and seven industrial operations that have saved or created approximately 300 jobs. CDBG funds have also assisted the development of a new drive in the commercial district at the I–90 interchange that will accommodate six new businesses. CDBG money also made it possible for us to install a wheelchair lift in the Austinburg Town Hall in order

to comply with the Americans with Disabilities Act. The $23,000 price tag would have been beyond our means to fund otherwise.

County Commissioner Duane Feher maintains that CDBG funds are one of the few Federal grant programs that encourage a true inter-governmental partnership amongst Federal, State and local governments.

We have been working for 3 years on a tenfold expansion of the wastewater treatment plant that is a critical part of the progress. Now is when the Federal Government agencies can be part of the solution. The EPA and the Army Corps of Engineers should assist local communities in the permitting process. Our experience with these agencies is that they are quick to tell us what we cannot do, but offer no assistance in working toward the solutions.

There has been a lot of attention given to unfunded mandates. Often well-intentioned ideas that emerge from the Federal Government are significantly lacking in common sense. For example, I am the father of a daughter born with spina bifida, I am sensitive to access issues. However, it makes no sense to me that the Federal Government demands wheelchair ramp curb cuts on a six-lane highway where no physically able person would consider crossing the street. In another regulatory snarl, we in Ashtabula County recently learned that Head Start and the Ashtabula Transportation System will not be able to pursue the common sense course of combining transit programs in order to offset the effects of Federal cuts to both programs. Head Start has been mandated at the Federal level to start its own transportation system despite willingness at the local level to consolidate transportation resources.

As a working person, I certainly believe that all American workers deserve a safe working environment. However, OSHA regulations now permit one disgruntled or lazy employee to shut down an entire work area with a simple question about material safety data sheets. And furthermore, no grassroots official such as myself could possibly wade through the legalese contained in the pounds of paperwork comprising the OSHA regulations. In both my private and public sector work, I support common sense OSHA reform as contained in Congressman Ballenger's H.R. 1834.

As an employee of the Cleveland Electric Illuminating Co., I see firsthand the damage done when government competes with the private sector. For example, the Federal Government's failure to finalize the Rural Electrification Act of 1935 has resulted in continued subsidization of municipal and cooperative electric utilities, utilities that hold their annual conventions in such rural places as Las Vegas and Orlando, FL. This unlevel playing field results in bidding wars that reduce tax revenues to our schools and to our governments. I know from experience that my constituents would be better served if all utilities lived by the same laws. And I was very disappointed on Wednesday that the amendment, the Klug amendment, was not passed by Congress.

As an elected official from a rural county, I am also concerned with the benefit from the much-heralded Information Superhighway. The FCC and the State PUCs must work hand-in-hand to ensure that regulation does not stifle development.

One other point I would show in closing is the major concern of grassroots elected officials is to find ways to reinvest revenues in

local communities. CDBG funds and many other Federal programs that truly benefit local communities are facing cuts, yet the Federal Government supports white collar crime as exemplified in the $550 billion in the S&L bailout.

As a local elected official at the grassroots level, I value communication, coordination and cooperation. Please meet with us in a genuine effort to communicate both ways, coordinate programs for maximum efficiency and cooperate with those who are working daily at the level that most intimately affects people's lives. If we do this together, we put an end to the Federal Government's day dreams that become local government's nightmares.

Thank you. [Applause.]

[The prepared statement of Mr. Whitmire follows:]

DANIEL E. WHITMIRE
1455 Hidden Hemlock
Austinburg, OH 44010

As a local elected official, I believe that the federal government should be a partner to grassroots government in its efforts in economic development, infrastructure expansion, public safety and planning, not an adversarial obstacle. It is my hope that the experiences I and the other witnesses bring to this committee will serve as models in a genuine effort to move the federal government towards good commonsense legislation. We must never forget that government does not exist for the elected officials, the appointed officials, and the bureaucrats; it belongs to the people.

Austinburg Township is a small rural township, 25 square miles, with a population of approximately 2,300 (1990 census, 1,902). In 1990, Austinburg was sitting in a hub of Ashtabula County with major intersections at Interstate 90 and State Route 45, and State Route 45 and State Route 307. It has the only United Parcel Service building between Cleveland and Erie, Pa. Just south of the UPS location is Coffee Creek Industrial Park, which consists of ten five-acre parcels. Most of this sat idle and undeveloped due to extremely poor communication and cooperation at the local level. A zoning and local plan update was needed to develop the area.

First, the zoning was updated to meet and satisfy requirements in all areas, which included the creation of an Industrial/Office Park District and the creation of an Accommodation Commercial District for highway interchange business. After Coffee Creek Industrial Park lost a potential sale due to inadequate infrastructure, the Trustees determined that a plan for infrastructure development should be the next step.

At this point the Austinburg Township elected officials began to communicate with the County Commissioners, Economic Development Office, and state officials to look for funding in the form of grants, matching funds and loans. Coffee Creek Industrial Park, built with federal grant money, sat idle for five years but now has a new water tower, a wastewater treatment plant, and seven industrial operations that have saved or created approximately 300 jobs. With the help of Community Development Block Grant (CDBG) funds, we have been able to assist the development of a new drive in the commercial district at the I-90 interchange that will accommodate a new motel, fast food restaurants, office buildings, and four additional businesses. CDBG money also made it possible for us to install a wheelchair lift in the Austinburg Town Hall in order to comply with the Americans with Disabilities Act (ADA); the $23,000 price tag would have been beyond our means to fund otherwise.

The Ohio Department of Development's Office of Housing and Community Partnerships administers the HUD/CDBG funds. In 1995 approximately $87.1 million will be available to local governments with $58.6 million allocated to the CDBG program and $27.0 million allocated for the Housing/Home Program.

In Ashtabula County, CDBG funds have been creatively utilized to stimulate community and economic development through partnership between the County Commissioners and other local officials. In fact during the past few years the the use of these funds with other local economic development tools since 1989 has stimulated over $500 million of private sector investment in Ashtabula County, and has significantly contributed to reducing the county's unemployment rate to its lowest level since 1978. (See attached "CDBG Program Allocations 1995")

County Commissioner Duane Feher, Vice-Chairman of the Ohio County Commissioners Association Planning and Economic Development Steering Committee, maintains that CDBG funds are one of the few federal grant programs that encourages a true intergovernmental partnership amongst federal, state, and local governments to address a number of community and economic development issues including both housing and employment opportunities.

We have been able to enhance public safety by validating the necessity for high mast lighting at the I-90 interchange. This was installed by the State of Ohio in 1995 after a three year letter writing campaign. Without the assistance of the Ashtabula County Commissioners, State Representative Ross Boggs, State Senator Robert Boggs and the Lieutenant Governor of Ohio, now Senator Mike DeWine, this would not have been possible.

Austinburg Township may be small, but its part-time local elected officials and volunteer boards burn the midnight oil to procure revenues, educate constituents, and listen to their immediate concerns. We strive to do it right the first time.

With an annual budget of $367,000 we have to run a tight, smooth, efficient operation. We have only two full-time road workers. They are assisted by the elected officials, who have acquired Commercial Driver's Licenses, in plowing snow, cleaning ditches, chipping and sealing roads, and paving roads. Our Zoning Department is staffed by a part-time Zoning Inspector at a salary of $175 per month, and a part time assistant paid on an hourly basis. The five members of the Zoning Commission and the five members of the Zoning Board of Appeals serve entirely without compensation. The five member Park Board is also volunteer. And the 29 person Austinburg Fire Department is also completely volunteer labor.

Presently we are working on the expansion of the wastewater treatment plant that will take it from a 30,000 gallon capacity to a 300,000 gallon capacity. This is critical for progress, and we have worked for three and a half years on this expansion. Now is when the federal government agencies can be part of the solution. The Environmental Protection Agency (EPA) and the Army Corps of Engineers should be there to assist local communities in the permitting process, not set up serious road blocks. Our experience with these agencies is that they are quick to tell us what we cannot do, but offer no assistance in working towards solutions.

There has been a lot of attention given nationwide to "unfunded mandates." These are the often well-intentioned ideas that emerge from the federal government significantly lacking in common sense. For example, as the father of a daughter born with spina bifida, I am sensitive to access issues. However, it makes no sense to me when the federal government demands wheelchair ramp curb cuts on six lane highways where no physically able person would consider crossing the street. In another regulatory snarl, we in Ashtabula County recently learned that Head Start and the Ashtabula County Transportation System will not be able to pursue the commonsense course of combining transit programs in order to offset the effects of federal cuts to both programs. Head Start has been mandated at the federal level to start its own transportation system, despite willingness at the local level to consolidate transportation resources. (See attached "Transit cuts may take toll within county").

Another example involves the Occupational Health and Safety Administration regulations. As a working person, I certainly believe that all American workers deserve a safe working environment. However, one disgruntled

or lazy employee should not be able to shut down an entire work area with a simple question about the Material Safety Data Sheet. And furthermore, no grassroots official could possibly wade through the legalese contained in the pounds of paper comprising the OSHA regulations. In both my private and public sector work, I support commonsense OSHA reform as contained in Congressman Ballenger's HR 1834. (See attached "OSHA Reform Legislation")

As an elected official I must be concerned with infrastructure development. As an employee of the Cleveland Electric Illuminating Company I see first hand the damage done when government competes with the private sector. For example, the federal government's failure to finalize the Rural Electrification Act of 1935 has resulted in continued subsidation in municipal and cooperative electric utilities, utilities that hold their annual conventions in such rural locations as Las Vegas and Orlando. When the federal government competes with the private sector in this way, it reduces tax revenues to the local schools and local governments. This unlevel playing field results in bidding wars that ultimately divide and harm the community, and is not confined only to the electric utilities. I know from experience that my constituents would be better served if all utilities lived by the same laws.

As an elected official from a rural county, I am also concerned that we benefit from the much-heralded Information Superhighway. The Federal Communications Commission (FCC) and the state Public Utilities Commissions (PUC) must work hand in hand to ensure that regulation does not stifle development. Currently, although we have state of the art technology, archaic regulation means that it is long distance for me to call some of my constituents in my own community.

One of the major concerns of grassroots elected officials is to find ways to reinvest revenues in the local communities. CDBG funds and many other federal programs that truly benefit our local communities are facing cuts, yet the federal government supports white collar crime as exemplified by the $550 billion dollar S & L Bailout and creation of the Resolution Trust Corporation (RTC). This is another federal program with no finality and no penalties for those responsible. At the local level, when a court clerk diverts fines to her own account, she is convicted, punished, and must return the money. If the federal government would enforce penalties against these criminals, there would be more money available to do the work of building a strong America.

This state's Ohio Public Works program is a good example of state dollars returning to local jurisdictions to leverage local monies, resulting in infrastructure investment that enhances economic development and public safety. This program, unique in the country, could be a model for future federal programs that would result in positive statements about the federal government and its officials.

As a local elected official at the grassroots level, I value communication, coordination, and cooperation. Please, meet us with a genuine effort to communicate both ways, coordinate programs for maximum efficiency, and cooperate with those who are working daily at the level that most intimately affects peoples' lives. If we do this together, we might put an end to federal government daydreams that become local government nightmares.

VI. Administration Plan

Part I: Fiscal Year 1995 Program Allocation

A. CDBG PROGRAM ALLOCATIONS

The following program allocations for FY'95 are based on a $58,607,000 funding level assumption from HUD (a 2% increase over the FY'94 funding):

State Program Administration (2% allowed and matched, plus $100,000 not matched)	$ 1,272,140
State Technical Assistance (1% allowed)	286,070
Community Housing Improvement Program (CHIP)	11,796,790
Emergency Shelter Grant Program	500,000
Formula Allocation Program	23,000,000
Water and Sanitary Sewer Competitive Program	8,700,000
Economic Development Program	9,150,000
CDBG Discretionary Fund	700,000
Microenterprise Business Development Program	300,000
Imminent Threat Set-Aside Fund	300,000
Downtown Revitalization Competitive Program	2,300,000
New Horizons/Fair Housing Assistance Program	---------
Training and Technical Assistance Program	$ 300,000*
Total:	$58,607,000

*This is a set-aside of the state's 1% allowance for technical assistance, which totals $586,070.

B. HOME PROGRAM ALLOCATIONS

State Program Administration (10% allowed) (approximately 60% distributed to state recipients and other local grantees)	$2,412,200
Community Housing Improvement Program (CHIP)	10,850,000
Non-Profit Housing Development Program	10,350,000
Community Housing Development Organization (CHDO) Competitive Operating Grant Program	$ 509,800
Total	$24,122,000

C. EMERGENCY SHELTER GRANT (ESG) PROGRAM ALLOCATION

State Program Administration (5% allowed)	$ 154,050
Emergency Shelter Grant Formula Program	1,799,000
Emergency Shelter Grant Competitive Program	550,000
Discretionary Fund/Homeless Prevention	150,950
Supportive Housing for the Homeless (SHH)	$ 427,000
Total	$3,081,000

D. HOUSING OPPORTUNITIES FOR PERSONS WITH AIDS (HOPWA) PROGRAM ALLOCATION

State Program Administration (10% allowed) (approximately 70% distributed to local grantees)	$ 140,000
Housing Opportunities for Persons with AIDS (HOPWA)	1,185,000
Training and Technical Assistance Grant Program	$ 75,000
Total	$1,400,000

E. Supportive Housing for the Homeless Program Allocation

The total allocation for this program will be determined in the State Fiscal Year 1996 budget.

Mr. CLINGER. Thank you, Trustee Whitmire. And I want to say again, as I did to the previous panelists that if you did not express all of the words in your written statement, your written statement will be, in its total form, a permanent part of this record.

I would like to now recognize the Honorable Robert A. Gardner, who is a county commissioner from Lake County, OH. Commissioner Gardner.

Mr. GARDNER. Thank you, chairman and thank you, Congressman LaTourette, for the opportunity to speak today.

If you take one iota of something that we have done in Lake County to make Federal Government work better, we are certainly in favor of it.

Lake County has a population in excess of 215,000 and is governed by a three member Board of Commissioners. The county is responsible for the justice administration, road and bridge maintenance, health care, sanitation, public works, social services, water distribution, wastewater treatment and solid waste disposal. The county commissioners are responsible for the management of finances, facilities and personnel. Approximately 1,620 full time and 458 part time employees work for Lake County.

Commencing in 1989, the Lake County Board of Commissioners implemented cost savings and efficiency enhancement measures that have downsized government and improved services. The measures include: competitive bid process, consultants for specialized projects, computerization and improved technology, central purchasing, revenue raising projects, county/private business partnerships, county/local government partnerships and privatization of public services.

I will try to talk to most of those.

The competitive bid process for the purchase of equipment, supplies and services has saved Lake County millions of dollars. Using competitive bids to purchase liability and auto insurance alone saved the county $3.3 million between 1989 and 1994. The average annual cost for that insurance prior to 1989 was $1.3 million. By taking bids and negotiating with carriers, the average annual cost from 1989 through 1994 was $721,000.

Hiring of individual consultants with special expertise in lieu of large firms or additional employees to assist in specialized projects has saved Lake County thousands of dollars. For example, the county hired a retired consultant with years of hands-on construction experience to oversee and manage public improvement projects. His experience resulted in suggestions on how the work could be done more efficiently. Change orders were not routinely approved. Instead they were scrutinized as to necessity and alternatives.

Large firms have little incentives to keep the cost of change orders down because the percentage of their basic total cost is based on the total construction cost. However, a consultant who works directly for the county on an hourly basis has an incentive to closely examine the change orders.

Computerization and improved technology have resulted in smaller but more efficient government. In 1985, the Lake County Data Center had a single computer installation and 20 employees. Today the Data Center has four computer installations, a local area

network, a digital equipment mini-computer system, but only 10 employees. Operation expenses decreased from $657,000 a year to $286,000 in 1994.

Much of the computer hardware is leased as a result of rapid changes in technology that makes systems obsolete within a short period of time. Lease upgrades allow the county to stay current with computer technology.

The county telecommunications network not only provides state-of-the-art communication in the event of an accident at the Perry Nuclear Power Plant, but it also reduces the annual cost for telephone service by an estimated $200,000 a year by using digital microwave systems to eliminate long distance telephone boundaries within the county, so that all parts of the county can call one another from the county offices without paying long distance rates.

A mobile data terminal system allows police officers to check license plate registrations, receive criminal information printouts and receive photographs in police cars without the assistance of a dispatcher. A video arraignment system utilizing a local cable company saves $135,000 in equipment costs and $450 a month on telephone line charges by reducing the need to transport prisoners back and forth to the jail.

Central purchasing. By centralizing and bulk purchasing supplies, Lake County has experienced a 38 percent cost savings. Duplication of buyers in every department has been eliminated; duplication of accounting staff and filing has been eliminated; duplication of preparing requisitions has been eliminated; duplication of preparing purchase orders has been eliminated; duplication of preparing multiple checks has been eliminated; and the duplication of delivery receipts, exchanges and returns has been eliminated, thus saving the taxpayers a tremendous amount of money.

Revenue raising projects—Lake County has been innovative and creative in finding ways to raise revenues to offset the cost of government operations. The Lake County jail houses Federal and out-of-county prisoners for a fee that has generated $10.5 million into the general fund in 1991. In 1994, the public telephone system in the jail generated moneys for the phone company, but limited profits for the county. A new system initiated this year will generate over $2 million for the county over the next 4 years.

County/private partnerships—we have entered into with GTE Mobilenet and we have shared resources for the past 3 years, thereby eliminating the need for additional radio towers and eliminating the need to purchase land for new towers. By sharing the same towers, the county has saved approximately half a million dollars.

Individuals and private businesses contributed approximately $25,000 toward building a police substation in Painesville Township. Substantial labor was provided for the project by students from Auburn Career Center. Volunteers from the same school refurbished the Sheriff's Department SWAT van at no cost. So we are always looking for ways to cut costs.

The Sheriff's Department and other municipal police agencies in the county benefit from cooperative partnership with the Lake Hospital system.

Very briefly, I would like to thank the committee—the rest of this is in the transcript. For the past 6 years, the Lake County Board of Commissioners has sought ways to reduce the government costs, cut the size of government and improve the efficient provision of government service. Working with the private sector, sharing resources, avoiding duplication of services and improving technology has enabled Lake County to achieve these goals. Creative and innovative measures are continuously being sought for the rapidly changing needs of the public.

Thank you once again. [Applause.]

[The prepared statement of Mr. Gardner follows:]

TESTIMONY OF LAKE COUNTY COMMISSIONER ROBERT A. GARDNER BEFORE THE HOUSE COMMITTEE ON GOVERNMENT REFORM AND OVERSIGHT ON JULY 14, 1995, IN CLEVELAND, OHIO

Lake County, Ohio, has a population in excess of 215,000 and is governed by a three-member Board of Commissioners. The County is responsible for general government, justice administration, road and bridge maintenance, health care, sanitation, public welfare, social services, water distribution, waste water treatment and solid waste disposal. County Commissioners are responsible for the management of finances, facilities and personnel. Approximately 1,620 full-time and 458 part-time employees work for Lake County.

Commencing in 1989, the Lake County Board of Commissioners implemented cost savings and efficiency enhancement measures that have downsized government and improved services. The measures include:

1. Competitive bid process;
2. Consultants for specialized projects;
3. Computerization and improved technology;
4. Central purchasing;
5. Revenue raising projects;
6. County-private business partnerships;
7. County-local government partnerships; and,
8. Privatization of public services.

COMPETITIVE BID PROCESS

The competitive bid process for the purchase of equipment, supplies and services has saved Lake County millions of dollars. Using competitive bids to purchase liability,

property and auto insurance alone saved the County 3.3 million dollars between 1989 and 1994. The average annual cost for that insurance prior to 1989 was 1.3 million dollars. By taking bids and negotiating with carriers, the average annual cost from 1989 through 1994 was $721,000.

CONSULTANTS FOR SPECIALIZED PROJECTS

Hiring individual consultants with special expertise in lieu of large firms or additional employees to assist in specialized projects has saved Lake County thousands of dollars. For example, the County hired a retired consultant with years of hands-on construction experience to oversee and manage public improvement projects. His experience resulted in suggestions as to how work could be done differently to avoid costly change orders. Change orders were not routinely approved. Instead they were scrutinized as to necessity and alternatives.

Large firms have little incentive to keep the cost of change orders down as fees are based on a percentage of the total construction costs. However, a consultant who works directly for the County on an hourly basis has the incentive to closely examine the change orders and protect the financial interests of the County.

COMPUTERIZATION AND IMPROVED TECHNOLOGY

Computerization and improved technology have resulted in smaller but more efficient government. In 1985, the Lake County Data Center had a single computer installation and 20 employees. Today the Data Center has 4 computer installations, a local area network, a digital equipment mini-computer system but only 10 employees. Operation expenses decreased from $657,000 in 1988 to $286,000 in 1994.

In addition to traditional data processing, the Data Center has become an information and resource center. Data is at the disposal of all County departments. In 1990, of 37 County departments, 4 were fully automated, 25 were partially automated and 8 were not automated at all. In 1995, only 1 department is not automated and all others are either fully automated or 85% to 95% automated.

When permitted, fees are charged for services and in 1994 revenues totalled $253,000. In-house employees set up standards for equipment and software rather than paying outside consultants for that service. A uniform system of equipment and programs results in less cost in training and upgrades. Much of the computer hardware is leased as a result of rapid changes in technology that make systems obsolete within a short period of time. Lease upgrades allow the County to stay current with an up to date system.

Computerization has improved efficiency in providing service to the public. For example, the Treasurer previously maintained real property tax duplicates in bound ledgers. They were printed by the Data Center and maintained manually. Payment records for over 90,000 parcels of property were handwritten. With computerization, the duplicates are now maintained on-line. Payments are posted and available the next day. As a result, political subdivisions promptly receive their share of the tax revenue.

Financial accounts are now maintained on line. Purchase orders and checks are processed daily. Account balances are available at all times. Research capability eliminates the need for multiple hard copy books and update services.

The Sheriff's Department has a computerized jail management system which provides video imaging, video documentation, bar code reading, and video photography for over 50 work stations at a savings of hundreds of thousands of dollars. Technology permits

the computer aided dispatch services to operate software at 24 times the speed of the old system and saves the County over $4,000 a month in operation and maintenance costs.

The County Telecommunications network not only provides state of the art communications in the event of an accident at the Perry Power Plant, it also reduces the annual cost for telephone services by an estimated $200,000 by using digital microwave systems to eliminate long distance telephone boundaries within the County. The telephone network allows County offices to make toll-free calls anywhere in Lake, Cuyahoga and parts of Geauga counties.

A mobile data terminal system allows police officers to check license plate registrations, receive criminal information, print reports and receive photographs in a police car without the assistance of a dispatcher. A video arraignment system utilizing a local cable company saves $135,000 in equipment costs and $450 a month on telephone line charges by reducing the need to transport prisoners to their arraignment. The County has a state of the art radio system, alpha-numeric paging system and an emergency operations center that combines all available technology and provides beneficial response services to local communities.

CENTRAL PURCHASING

By centralizing and bulk purchasing supplies, Lake County has experienced a 38% cost savings. Duplication of buyers in every department has been eliminated; duplication of accounting staff and filing has been eliminated; duplication in preparing requisitions has been eliminated; duplication in preparing purchase orders has been eliminated; duplication in preparing multiple checks has been eliminated; and, duplication of delivery receipts, exchanges and returns, has been eliminated.

Standardized maintenance contracts lead to lower prices and eliminate over 100 individual invoices for office equipment. Standardized boiler plate bid documents for furniture and equipment purchases reduce the cost of consultant fees. Copy machines, fax machines, computers, furniture and equipment are not traded in but are recycled to other departments with low usage to extend the equipment life.

REVENUE RAISING PROJECTS

Lake County has been innovative and creative in finding ways to raise revenue to offset the cost of government operations. The Lake County Jail houses federal and out of county prisoners for a fee that has generated 10.5 million dollars for the General Fund since 1991. In 1994, the public telephone system in the jail generated monies for the phone company but limited profits for the County. A new system initiated this year will generate over 2 million dollars for the County over the next 4 years.

COUNTY-PRIVATE BUSINESS PARTNERSHIP

Lake County and GTE Mobilnet have shared resources the past 3 years thereby eliminating the need for additional radio towers and eliminating the need to purchase land for new towers. By sharing the same towers, the County has saved approximately $500,000.

Individuals and private businesses contributed approximately $25,000 toward building a police substation in Painesville Township. Substantial labor was provided for the project by students and staff from Auburn Career Center. Volunteers from this same school refurbished the Sheriff's Department SWAT van at no cost other than for materials.

The Sheriff's Department and other municipal police agencies in the County benefit from a cooperative partnership with the Lake Hospital System. The hospital offers a 50%

cost reduction for prisoner care for police agencies. The Sheriff's Department was permitted to privatize the health care of a critically wounded felon in 1994 which saved taxpayers tens of thousands of dollars.

COUNTY-LOCAL GOVERNMENT PARTNERSHIP

By working with the Lake County ADAMHS Board (Alcohol, Drug Addiction and Mental Services), the Sheriff's Department has an in-house drug and alcohol program in the jail which is the only such program in the State. This program has produced a higher recovery rate both state-wide and nationally than any other program.

The Sheriff's Department consolidated services through cooperative programs with other local governments. The Sheriff's Department has been the central dispatch agency for 15 police and fire agencies since 1987. This has reduced the duplication of services and costs and has streamlined operations.

The County, Laketran and local police and fire agencies share an 800 MHZ radio system that brings mobile data terminals to those agencies. Critical information for police and fire personnel assists them in apprehending criminals and enforcing the law.

PRIVATIZATION OF PUBLIC SERVICES

The Sheriff's Department has privatized its prisoner transport program. The contract saves the cost of at least one police officer. It has also saved approximately $40,000 a year in travel expenses for extraditions from across the country.

The Lake County Utilities Department operated a municipal Solid Waste Facility which accepted approximately 220,000 tons of solid waste in 1994. The County evaluated the cost effectiveness of retaining a private contractor to manage and operate the Solid Waste

Facility. The evaluation determined that a significant cost savings could be realized from privatization.

By using a private contractor, the County will realize an annual operations cost reduction of $293,575. In addition, increased efficiency will save airspace at an additional annual savings of $638,181. Thus, the total annual savings for privatization of the County Solid Waste Facility will be $931,766. This system has just been implemented by Lake County.

CONCLUSION

For the past six years, the Lake County Board of Commissioners has sought ways to reduce the cost of government, cut the size of government and improve the efficient provision of government services. Working with the private sector, sharing resources, avoiding duplicate services and improving technology has allowed Lake County to achieve these goals. Creative and innovative measures are continuously being studied to meet the rapidly changing needs of the public.

Mr. CLINGER. Thank you, Commissioner Gardner. I want to say, as I did previously, your entire written statement in its total form will be made a permanent part of this record.

Mr. GARDNER. Thank you.

Mr. CLINGER. Any questions of our panelists? The gentleman from California.

Mr. HORN. Thank you, Mr. Chairman.

Only one of you really mentioned the programs that had not been facilitative and that was Mr. Whitmire. And that is very helpful to us. What I would like to ask you is if you had just one choice of the Federal programs with which you deal, which one would you either reform or get rid of? I would like to start right down the line with Mr. Conrad. Just name it—which one should not be around.

Mr. CONRAD. Fortunately I do not deal with Federal programs.

Mr. HORN. OK, we will skip you. Dr. Rasey.

Dr. RASEY. I find this very hard.

Mr. HORN. Well, so do we.

Dr. RASEY. I would look perhaps on the back side. I think we do need to look at the cost-effective terms, non-substitutive terms. I will give an example, and this is my personal statement, not my representing the Growth Association. The second home deduction.

Mr. HORN. OK, you are saying we should not give that in taxes.

Dr. RASEY. That is correct.

Mr. HORN. I think a lot of us agree with you and I think we will take care of that.

Ms. Freeman.

Ms. FREEMAN. If we had our druthers, we would never have to put working poor people, raise their rents to such a level that they have to move out of public housing before they are ready. The Brooke amendment passed in the 1970's requires that public housing residents pay 30 percent of their income for housing. That is whether or not they are in a one-bedroom apartment, an efficiency or a five-bedroom apartment. When we hire a resident and get them a good paying job or if we get them a job or training elsewhere, their rents shoot up automatically to 30 percent of their income. So they oftentimes are at the end of the month with less discretionary income than the person who is sitting around on welfare.

The other negative impact of that is that they could go—they have to pay more, $600 or $700 a month for their two-bedroom apartment where the neighborhood rent is maybe $350. So we lose working role models in public housing and if I could pick any one regulation or law that has negatively impacted public housing, it would be that.

Mr. HORN. I think both your local Congressman and all of us would appreciate any elaboration you want to give on that. We have got a chance to do something about some of these things, because appropriations bills are coming before us that relate to those matters. And that is where we need your guidance. It is amazing. As you know, if we can get help from grassroots operators of this who see the errors, it will help.

Now Mr. Whitmire, you were the one who had the guts to say a few people are not as cooperative as they should be. [Laughter.]

You mentioned the Army Corps of Engineers who is usually cooperative, but I know some situations where they have not. You mentioned EPA. That is high on many people's list and then OSHA, that is high on many people's list. Anybody else you want to add?

Mr. WHITMIRE. I would say that probably the most important thing in cost reduction today would be OSHA, but very near and dear to my heart is the white collar crime where someone with the poison pen, such as the S&L bailouts, the contractors, the doctors, the people that know how to get through the legalese and the paperwork are able to take our tax dollars—I believe there was an article just in the paper. We had a dentist here in Cleveland that was able to get a few million dollars through Medicare/Medicaid forms and things like that. I do not know, I may be better off facing someone with a gun and be able to talk them out of it—I cannot stop them with that poison pen. So I think the white collar crime would be first and OSHA would be second.

Mr. HORN. Well, you will be glad to know I met with several Inspectors General yesterday, including HHS, and they recouped millions last year just going after the white collar crime of doctors, lawyers conspiring to rob Medicare, this kind of thing, and Medicaid.

Mr. Gardner.

Mr. GARDNER. One thing I think there needs to be some reform with the ADA—very, very costly to the taxpayers. Some of it needs to come back with a common sense approach. OSHA, once again, some common sense approach dealing with some of the complaints, unnecessary and frivolous complaints that we receive from some people in regards to OSHA; prevailing wage, which I know is not necessarily a Federal issue, but certainly has cost us and the taxpayers a great deal of money. One of the biggest bangs that we ever had for the dollar was revenue sharing. I was a township trustee prior to being a county commissioner. And that money, dollar-for-dollar, with the little bit of administrative cost that was involved, got directly to the people, got directly to the local governments. CDBG is probably the next best thing. We do an awful lot with that money, an awful lot of good things.

But there are some areas, once again, that could be cleaned up and made to be more reasonable.

Mr. HORN. Yes, I agree with you and you will be glad to know we favor block grants and trying to get back to what you correctly described with revenue sharing.

Mr. CLINGER. The gentleman's time has expired.

The gentlelady from Illinois.

Mrs. COLLINS. Thank you, Mr. Chairman.

Let me say now to Ms. Freeman that I am impressed with all that I have heard about the miracles that you have worked here in the Housing Authority in Cuyahoga County. You know, we have a major problem in Chicago with the Chicago Housing Authority, and as the world now knows, it has been so bad that Secretary Cisneros had sent people there to help to operate the Housing Authority.

If you had an undertaking that is as awful, where you had deteriorating buildings, where you have high level crime, where you have a lot of all the evils that you can think about in a given com-

munity of very large size, what would be the first two things that you would do to try to correct it?

Ms. FREEMAN. We encounter all of those issues in Cleveland. Chicago is just a bigger picture of those exact same problems. The first thing we addressed was safety. Now as in Cleveland, Chicago, 50 percent of its inventory—little known to the public—is senior citizen housing. If you can help the seniors to feel safe and be safe in their homes, then 50 percent of your inventory is calmed down, crime out. We had homeless people sleeping in the stairway of senior citizen buildings, we had the mentally ill in the senior citizen buildings going on a reign of terror. Just by putting a police officer, a responsible supervised police officer at the gate of that door and having that officer patrol that building quieted the senior citizen housing.

The second thing we did was we do not have high rises for children, but if I were going to go into Chicago, I know they—we have modeled our social service sweeps after the Chicago Housing Authority drug sweeps. It meets the same results. You go in, you clean the building out of the bad guys and you build attractive fencing around those buildings and you increase your responsible, professional, trained police force to work with the residents to establish security patrols. And then you begin to deal with the infrastructure of those buildings—are they viable? I understand in Chicago that they were designed with Florida standards. That is, the elevators are on the outside, so they are going to freeze every winter. That is—we encountered that, that is just criminal, it is criminal. So you are going to have to deal with those design problems like we did. We had a concerted defensible space architectural team to come in and look at how can we architecturally change those buildings to ensure defensible space. And sometimes you tear them down and you rebuild with single family townhouse, livable developments. But you have to make a commitment to rebuild or the residents are desperately fearful of being homeless.

Mrs. COLLINS. There has been a discussion in my city about combining both low income housing, public housing, with low income non-public housing, not just getting sites but actually building developments where you have public housing as well as non-public housing on the same plat, for example. What do you think about those kinds of ideas?

Ms. FREEMAN. That can work, but it has to be very well designed and it is called mixed income housing, and it is affordable housing, not necessarily low income housing.

Mrs. COLLINS. Right, affordable housing.

Ms. FREEMAN. It is well designed, well built affordable housing. The public housing units do not look any different—you could not tell if they are public housing or otherwise. That is an important ingredient. And you have to screen your homeowner applicants well, you have to screen your residents well, and you have to train them.

Mrs. COLLINS. One final question because that light is going to go off on me in a minute—there has been some discussion in Chicago and perhaps in other areas around the country of having all senior citizen buildings. Now there are some, but some other people had been allowed to move into them, the disabled for example, and

people who had other problems. And we found—we were told that in some of the instances, some of the people who had moved in the buildings were former drug abusers, et cetera and therein laid a great deal of the cause of the feeling of unsafeness by some of the senior citizens. Do you think that senior citizens buildings ought to be utilized only by senior citizens?

Ms. FREEMAN. The mixed population issue is a serious one, the de-institutionalization of the mentally ill has been dumped in the laps of public housing managers and it is a crime to have senior citizens, frail senior citizens have to meet schizophrenic young men in the elevator.

We have started a pilot where we are build—we are assigning buildings just for young mentally disabled, but there has to be a mental health board commitment of services in that building to keep these people on their medication. Yes, there should be a separation.

Mrs. COLLINS. Thank you.

Mr. CLINGER. The gentlelady's time has expired.

Does any other member seek recognition to ask questions? The gentleman from Ohio, Mr. LaTourette.

Mr. LATOURETTE. Thank you, Mr. Chairman, and I just have one question of one witness, although I would commend all witnesses for their forthright testimony and the wonderful things they are doing in the areas under their jurisdiction.

But to Director Conrad, the question I would have of you, I am fully aware of your reputation—I think the chairman called you a bulldog—I consider you to be a troubleshooter and your troubleshooting capabilities in the Department of Administrative Services have earned you the enviable task of taking on the Bureau of Workers Compensation in the State of Ohio and I know you are looking forward to that.

As I was reading your testimony though, you talk about the Operations Improvements Task Force and if I understood the written portion correctly, to this point in time, you and the Governor have implemented 82 percent of the recommendations that came forth from the Task Force. My question is how long did that take from getting the organization up and running to implementing 82 percent, and is Ohio 82 percent more efficient, or is it not a one for one tradeoff? And how much more do you think Ohio needs to do to become truly efficient, if you are not there?

Mr. CONRAD. There are several points. The Operations Improvement Task Force actually started 30 days into the new administration and the review was completed in about 8 months. So we have really been working on it from mid-1992 until the present time. The recommendations were really divided into three categories. There were about a third that were very simple and could be implemented almost immediately. Then there was a third that took some difficulty and really where we are right now at the 82 percent are those that in many cases require—in two cases, for example—a constitutional amendment. I mean, there are good ideas that you are simply blocked by law, or in our case, in some cases the Constitution. So to be totally honest with you, we have a goal of about 85 percent implementation, and if that happens, it will be, as I understand it, the top implementation in the country on a Statewide

level. Are we 82 percent more efficient? The answer to that is probably not. Are we a great deal more efficient and have we saved millions and millions of dollars of taxpayer moneys because of that? Very much so. Combined now with the total quality management movement that the Governor has instituted to the 60,000 employees to make the State government a high performance workplace, and we are really moving on, I think, to the next logical step and that is total employee participation.

Mr. LATOURETTE. The difficulty that has come up with some of the other panels is that this process is a little like the story of the three bears, some think we are going too quickly, some think we are going too slowly and the biggest goal of all is to reach Chairman Clinger's objective of going just right. Do you feel that the timeframe which you and the Governor have implemented in Ohio has been just right?

Mr. CONRAD. I am speaking for myself now and I think I am speaking for the Governor. And the answer to that would be yes. In the sense that there were at least 40 percent of the recommendations that could be implemented almost immediately, and were. And as I said, then there were others that take more time to get through the legislature, to get the legislative process through. So while I cannot sit here and say we would not have rather moved quicker in the process, I think the process itself is a pretty good one.

Mr. LATOURETTE. Thank you, Director Conrad. I yield back my time, Mr. Chairman.

Mr. CLINGER. I thank the gentleman. And I thank the panel for being with us this morning and this afternoon, and for your patience in being with us as long as you have had to be here, but you have given us some very valuable information for our deliberations. Thank you all for being here. [Applause.]

At this time, we come to the open mic segment of our program and this may be the only opportunity we will have to have the open mic in view of the fact that time is moving along. We do have two further panels to listen to.

In order to be relatively fair to all people, we did do this by a lottery. I have never won a lottery and do not think I ever will, but I hope that there are some winners here in terms of asking you to draw a number and to have an opportunity to address the members who are gathered here this afternoon. There are a couple of mics I think out there. There is one directly in front and one here on my left. And I am going to just ask those that have these numbers to come forward. I will call you one at a time and ask you to come forward and give your comment. We are going to try to limit you to 3 minutes, if that is possible—well, it has to be possible because we have to move it along.

No. 105.

[No response.]

Mr. CLINGER. No 105. No. 11.

Would you just state your name for the record, please?

STATEMENT OF KEITH SIMMONS

Mr. SIMMONS. Good afternoon, Congressmen and Congresswoman, my name is Keith Simmons. I live in Berea with my wife and four children, three are foster children.

Here is what I think about the changes in American politics. I am not very religious, but God bless the conservative 104th Congress and God help the liberals, they will need it.

My faith in the American political system has been restored. No longer do I feel as though politicians will say anything just to get elected. You made some promises last year and you actually kept them.

Now I would like to concentrate on education from a parent's point of view. I truly hope that Congress will indeed eliminate the Department of Education and repeal Goals 2000. [Applause.]

Parents cannot compete with the Federal funds and the influence they have over our local school officials. Because I am not a professional educator, politician or speech writer, I would like to offer some quotes from some professionals.

Kevin O'Brien of *the Plain Dealer* writes "Goals 2000—the Federal nightmare that would put an unelected bureaucracy in charge of determining what your children should know, what they should be able to do and what they should be like as human beings. Unless we hire Federal education marshals to make some home visits, this is unenforceable. But it is nonetheless an invitation for the feds to tell parents how to raise their children."

Since I only have 3 minutes, I will skip some.

If you believe that Mr. O'Brien was just blowing smoke, just listen to what our local schools are saying about the voluntary requirements of Goals 2000. "A contingency will occasionally visit locations which receive venture capital grants to ensure that the buildings are following their plans and meeting up to their progress levels. Locations that are not may jeopardize future funding."

As you can see, parents are being asked to sell out their rights to make decisions about their children's schools in exchange for a minute amount of Federal funding.

Kevin O'Brien also writes "Once the state skims its percentage off the top, the take comes to $22,000 in the second year for each school."

He also writes, "For such a pittance, why should Ohioans even consider selling their rights."

I would like to present to the panel documentation that supports the assertions that I have made today and I would like to say thank you once again for at least bringing to the floor a vote on—and I will not go through it because of time, but it is a whole list of the accomplishments of the 104th Congress.

Remember too that capital punishment ensures that murderers and rapists will not become repeat offenders. We are tired of the "hug a thug" approach.

Presently my wife and I care for a beautiful foster child. Do you wonder what caused her to be placed in our care? The children were removed from their home because their father set her brother on fire. Was the father jailed? No. He simply had to attend classes on how to be a good daddy. As a side note, he normally does not

live with his wife and kids. If he did, they would not receive as much public assistance.

Dr. Martin Luther King once said, "War is a poor chisel to carve out tomorrow."

With these words in mind, let us ask those on the other side of the aisle to join with the Republicans in reducing social programs before America itself goes bankrupt. To keep things as they are is to ask our children to pay for our destructive dependence on the Federal Government.

In 1935, President Roosevelt said, "The lessons of history show conclusively that continued dependence on government induces a spiritual and moral disintegration fundamentally destructive to the national fiber."

And finally, I would like to agree with another Democrat, who said "And so, my fellow Americans, ask not what your country can do for you, ask what you can do for your country."

Thank you for your time. [Applause.]

Mr. CLINGER. Thank you.

No. 100. Is 100 here?

[No response.]

Mr. CLINGER. If not, No. 14. All right, No. 14. And to be followed by No. 96.

STATEMENT OF KATHLEEN NADALL

Ms. NADALL. My name is Kathleen Nadall, I am a housewife and I live in Elyria, OH.

I would just like to present this to the Congress. The private corporation known as the Federal Reserve System has created a system where it is mathematically impossible to pay off the debt. The Federal budget cannot be balanced because Congress has no control over the Federal Reserve Bank. Interest being charged to the U.S. Government by the Federal Reserve is the largest expenditure on the Federal budget. Congress cannot manage what they do not control.

Thank you.

Mr. CLINGER. Thank you. [Applause.]

No. 96. To be followed by 115.

STATEMENT OF DAVID VANDALL

Mr. VANDALL. I want to thank you for the opportunity of getting to speak. I am kind of ill-prepared for this, I just learned of your gathering here today at 3 a.m. today.

First of all, I would like to submit a videotape——

Mr. CLINGER. Your name, sir?

Mr. VANDALL. My name is David Vandall and I am from Medina County.

I would like to give you a tape for you all to view. This tape very well documents the atrocities that occurred at Waco, TX, and it also raises questions as to the integrity of our Commander in Chief.

I am a veteran of the U.S. Army and I know of documentation that I have seen where the military troops of this country have been questioned as to whether they would actually fire upon an

American citizen if they would not give up their arms. I am deeply offended at that and I know many, many are. [Applause.]

I also would like to submit to your committee—this is a document from Handgun Control, Inc., and as you can see it is a confidential document and it states that their desire and their goal, their whole outline is that they want to turn America into a society such as Britain. I would like to ask those who wrote this—and their names are on it—why did we descend from Britain? Why are there comments in here of returning our society to that and disarming us?

I am not a criminal, I have never committed an offense with a firearm, nor would I ever. That firearm is for protection. There was an individual in Lakewood who died 2 nights ago and maybe, just maybe, if he had the opportunity to be armed such as the rich people in this country with bodyguards, maybe he would not have died. He was stabbed five times.

Maybe this militia member down in Frazeyburg, had he been armed, not been murdered by a local law enforcement officer a week and a half ago.

And I would also like this committee to examine and take back to the general Congress and define income. Right here is documentation of at least 12 Supreme Court decisions that do not state that my wages earned from my labor are income, nor are they taxable. This whole country wants to boom and all the branches of government want to do what they can to make it boom. I say quit taking our money. We cannot buy nothing for our families. [Applause.]

Nothing. You need to first define income. It says under the Supreme Court decision that it is profit derivative from a source. My labor is not a source of gaining profit, my labor is a God-given inalienable right to support my family.

These are atrocities that are happening right now and my tax money pays you, you represent me. And I will tell you, "We the people" are the first three words of that Constitution, and we are tired of our livelihood being taken out from under us, both legally and illegally. We are tired of it. [Applause.]

Mr. CLINGER. The gentleman's time has expired.

Mr. VANDALL. I trust that you will take action.

Mr. CLINGER. Thank you very much. You might be interested to know that Mr. Zeliff is going to be conducting hearings this coming week.

Mr. ZELIFF. On Waco. And I guess just quickly, the purpose of doing the hearings is to get at the truth, a very fair and open process, we are going to spend 8 days. We have been working on this for 5 months, we intend to get to the bottom of it, we intend to be able to tell the American people exactly what happened at Waco.

Mr. CLINGER. Thank you. [Applause.]

No. 115. Your name, please?

STATEMENT OF JOSEPH FAKULT

Mr. FAKULT. Mr. Chairman, my name is Joseph Fakult, I live in Willowick, OH. I wish to commend you, Chairman Clinger, and your committee for your efforts in heeding American voters recent mandates for a more responsive and efficient Federal Government.

And in your words, "To refocus government where it is misdirected and to get government out of activities in which it does not belong."

Toward that desirable end, I wish to offer the following remarks on the misdirection of Federal funds for services of Planned Parenthood of America. Several years ago my then 14-year-old daughter Jennifer, a sophomore in high school, received a scare letter from Planned Parenthood asking her "to get scared," as fanatics were returning us to the dark days of back alley abortions. The enclosure ridiculed religious figures and was rife with appeals to fear.

Mr. Chairman and honorable members of this committee, Jennifer, my wife, Terry, and I were offended by the crass, insensitive, blatant disregard of our values for life and family. We are outraged that fungible taxpayer dollars helped to fund this crude solicitation for money.

According to the *American Spectator* of February 1995, 33 percent of Planned Parenthood of America's revenues received in 1993 were received through government grants and contracts, mostly through the maternal and child health and social service block grant programs. Federal funds through Title X of the Public Health Service Act finance a variety of taxpayer funded sex education initiatives. Yet, *Atlantic Monthly* in its October 1994 issue, affirmed the failure of sex education, and stated that, "There is little evidence that it sex education works. Teen-age pregnancy is up and so is the incidence of sexually transmitted disease."

In the fear letter mentioned above, choice was alluded to 12 times, but I ask you, Congressmen, guardians of our Nation's tax dollars, where was the option of choice for pro-family, pro-life taxpayers when in 1991 $124 million of government money was paid to Planned Parenthood? Where was the option of choice for taxpayers in 1992 and 1993 and 1994 when increasingly larger sums were paid to Planned Parenthood for services, and finally, where was the option of choice exercised on behalf of tens of thousands of annually aborted babies, abortions which are funded by the Federal tax dollars of a government "instituted among men to secure the rights of equally endowed men to life, liberty and the pursuit of happiness."

Honorable ladies and gentlemen of this committee, this is a grisly business to so spend public money. It is not a business that a government sensitive to a worsening cultural climate and sensitive to an obvious need to reconstitute the primacy of the American family should be funding. Certainly the objects of your budget allocations are legal, but just as certainly today we are called upon to exercise a prudent discretion on national spending that has been "misdirected to activities in which it does not belong."

In closing——

Mr. CLINGER. Sir, I must ask you to try and wrap it up.

Mr. FAKULT [continuing]. I would ask you, Congressional ladies and gentlemen, that this Congress which is presently dedicated to a new birth of traditional American values and a reconstitution of the family as a core element of good society, we ask you to eliminate funding for anti-family programs and eliminate funding for programs like sex education that result in increased sexual license and its attending welfare dependency.

Thank you, sir. [Applause.]

Mr. CLINGER. Thank you.

David, a brief comment?

Mr. MCINTOSH. Mr. Chairman, the gentleman at the beginning of his statement mentioned a subject of taxpayer funded lobbying, and I wanted to let you know we are looking at that and in fact later this month in Congress, there will be a rider to an appropriations bill that says you get a choice. You can either be a grant recipient or a lobbyist, but you are not going to use taxpayer money to lobby any more for more money or viewpoints of one interest or another. It will apply across the board, conservatives, liberals, you do not get the taxpayer moneys to lobby for your point of view. [Applause.]

Mr. CLINGER. Thank you. No. 106, to be followed by 53. 106.

[No response.]

Mr. CLINGER. No. 53. This is Madame 106? Madame 53. To be followed by 27.

STATEMENT OF DORIS EHNINGER

Ms. EHNINGER. I am a little nervous. My name is Doris Ehninger, I live in Parma. I want to thank you for hearing me.

I would like to see that you do not do away with the educational agent that we have, that you have been trying to get rid of. If you do that at a time when we need more educational people to help us get over this change. We need to have people have new jobs. We have no apprenticeships for any of them. You are eliminating jobs. We have unskilled labor. We need those agencies to help us through. You have no plan in our system to help our educational system move forward and to have new jobs.

If you also take voucher plans, which I am not politically for or against, that will destroy our culture. We have groups of people now that are forming different religious groups and we have private education that wants money and we have also Catholic, I should mention, religious groups that need money and you will destroy our educational system and our culture.

Second, if you do subsidize the corporations, those corporations were subsidized before and those jobs were dead-end. You also have, for example, robots that are replacing jobs, you also have cars that maybe the side panel is costing $8,000. They are not going to hire people who do not have the skills, so we need the skills that are there. You are eliminating too many organizations and things that we need.

I do appreciate you hearing me. Thank you.

Mr. CLINGER. Thank you very much. [Applause.]

No. 27, to be followed by No. 9.

STATEMENT OF BERNARD KROMER

Mr. KROMER. My name is Bernard B. Kromer, I am vice president of Manufacturing for Hybco Products, which is a small machine tool manufacturer here in Lake County.

As a taxpayer and citizen, I want to thank the committee for their insight and courage to go out to the people of this country to find out what the average citizen does and does not want from their government.

All around the world, governments have been selling off State-owned assets and enterprises. Over the past decade, some $468 billion worth have been shifted from governments to private investors. Yet despite its huge size, our Federal Government has privatized only one enterprise—Conrail, which went for $1.6 billion.

Congress in its quest to balance the budget and have government run more efficiently should consider privatizing many of the enterprises it now supports. The moneys the government would receive from the sale of assets and enterprises should be used to reduce the national debt.

The rewards of privatizing many government enterprises would be: The government would not have to pay subsidies; the government would be able to collect taxes from the privatized enterprises; the privatized enterprises would run more efficiently; the government could be downsized and many bureaucracies could be eliminated.

Just a few of the items—rather than going into a big elaboration: electric enterprises such as Tennessee Valley Authority, air traffic control, National Weather Service, NASA labs, Amtrak are just a few.

Federal tax laws also encourage municipal socialism. For example, tax law says that if you are a government-owned airport or electric utility, you do not pay taxes on your profits and the interest on your bonds is tax exempt. Yet if the identical facility is investor-owned, both profits and bonds are taxed.

Regulatory policy often exempts government-owned environmental facilities by name, but subjects the identical facility to stringent controls if it is owned by investors.

Every year, the Bureau of Land Management and the Forest Service manages to lose several billion dollars managing valuable lands while causing considerable environmental damage. These forest lands could be sold to private owners who protect their assets of timber. While on vacation in New Hampshire over the years, I have seen private sector's logging the national forests, which is fine, and they are doing a good job of it. But if these lands were sold, the private owners would also be placed with deed restrictions guaranteeing the right of access to backpackers, campers, fishermen, et cetera, and the government would benefit from the sale of the lands and would not have to maintain these lands at public expense.

Two other areas that Congress should consider defunding are the National Endowment for the Arts and Humanities. [Applause.]

The Federal Government began to support the arts and humanities in the 1960's. With the removal of Federal support, the arts will not vanish. The principal support for the arts has always come from ticket revenues, private donations and local government support. Another one is the Corporation for Public Broadcasting. [Applause.]

The removal of government support for public broadcasting will not mean the end of Big Bird or Barney. The end of government support for the arts and for public broadcasting will allow the marketplace and the public to decide what will be successful and what will not.

In conclusion, the government has to get back to the business of running the country and not ruining the country by trying to run all the business. Thank you. [Applause.]

Mr. CLINGER. Thank you, sir.

The next is No. 9, to be followed by No. 54.

STATEMENT OF DONALD LESIAK

Mr. LESIAK. My name is Donald Lesiak from Parma, OH, an American of Polish descent, born and raised on the southeast side of Cleveland and Parma, OH being Ohio's largest suburb with about 90,000 people. Some of the members of the committee I have met, many I have not.

But let me say that I am going to be very brief. I have a number of copies of a news release here that I had prepared, and I might mention, I am a professional engineer, certified manufacturing engineer in robotics, and turned auditor. In fact, I have 6 years of State service with the State of Ohio, initially as a State insurance examiner. One of my audits was Blue Shield of Northeast Ohio, a million and a half policyholders. That is about half the population of the entire State of Iowa that I just moved from after 9 years as a Federal employee from which I retired at Rock Island Arsenal, IL as a professional quality engineer.

So with that introduction, I have here two items; one of which I gave to Mr. John Kasich, the chairman of the House Budget Committee from the Columbus, OH area at a Cleveland City Club meeting probably last year in May or so, personally handed it to him, asked him a question publicly at this City Club. I got no answer.

I then asked this question at the Association of Government Accountants meeting and national conference at Columbus, OH, in August 1994, and I got what I would say when I asked the same question again to Mr. Kasich, who was the luncheon speaker, I got a non-responsive reply.

I have since faxed this to Mr. Kasich, or I tried and he has no available fax number, his policy is not to release it. They are afraid of traffic from citizens? So instead, I faxed it to Mr. Kasich by way of Mr. Newt Gingrich, and I asked them for a formal audit on this news release. It is an article dated May 22, 1990, Chicago Tribune. The headline says "U.S. finds $50 billion surplus and $43 billion of this surplus is in the Department of Defense." I would like to find out, by a detailed government audit, as to the results of my prior unheeded request as a concerned citizen.

The final thing, and I will summarize it a little more briefly if I can, is while with the U.S. Army at Rock Island Arsenal, Headquarters AMCOM, that represents the U.S. Army Armament Munitions Command, where they control 27 ammunition plants and arsenals around the country, including Ravana Arsenal outside of Akron. When I arrived there as a quality engineer, first time, brand new Federal employee, I discovered that I am in a spare parts lot and I said, you know, kind of what is that, I thought you hired me as a professional quality engineer. And they said well, remember the $400 hammer? Well, you have been hired to help solve that problem. I later found out because of all the bad news releases and press coverage that the services got, that Congress, you, literally created 1,063 jobs and appropriated $200 million to pay

these people, and I got one of those jobs in April 1984, retired on March 8, 1993. Been back in Parma, OH, it is going to be 2 years this month.

So as a result, you might say we were able to develop a computerized system enhancement on the Army's $2 billion worldwide automated logistics system and it has gone up and down the House and Senate and the White House with no positive response to date. What we have done, we have enhanced the Army's $2 billion——

Mr. CLINGER. Sir, I am going to have to ask you to wrap it up.

Mr. LESIAK [continuing]. Logistics system—OK. It goes governmentwide and I would like you people to face the challenge with a professional attitude as a responsive representative of the people to correct this problem, which will identify all $400 hammers and everything that the U.S. Government buys, by part number.

And with that, I thank you for your time and the opportunity on a lottery to be selected to speak here.

Mr. CLINGER. Thank you very much. [Applause.]

You may be interested in knowing that this committee, the Government Reform and Oversight Committee has been engaged in an effort to reform the government procurement and acquisition system now for two Congresses. We have enacted substantial reform last year, we are working on a bill this year that I think will further that exercise, so that we will no longer have the $400 hammers and the $500 coffee urns, et cetera. That has been a disgrace, I could not agree with you more. I think you will find that the legislation that we are working on is going to go a long way toward addressing that major abuse.

No. 54, to be followed by No. 85.

STATEMENT OF LOWELL LEFEBVRE

Mr. LEFEBVRE. Good afternoon, Mr. Chairman, committee members, others assembled here.

The name of this committee, the Committee of Government Reform and Oversight, suggests that it can potentially at least recommend many changes or reforms which we need to see in the Federal Government of the United States of America. It has been stated that the job of this committee is to reduce the size of government and to cut spending.

These two tasks are of course worthy to consider. However, it seems obvious that a smaller government and a less costly government are the natural consequences of what the goal ought to be. That is, the goal should be to reform our national government so that it will be the constitutional republic described in the Constitution of the United States.

This is an enormous task. How can we get from where we are today to where we ought to be? It will take a lot of work, a lot of words, a lot of action to undo the damage that has been done both purposely and also, in some cases, without harmful intent.

Many Americans will find that reform is an uncomfortable process. And the process and oversight involved needs to be handled in such a way that its impact will be as easy as possible to bear.

But there is no reasonable alternative. Please do not compromise this goal. Every elected official, I understand, swears to uphold the

Constitution, and yet, the actions are often disregarded. They disregard the commitment to uphold the Constitution.

It seems, for example, that 8 of the 10 amendments which we know as the Bill of Rights are interpreted to mean something different from the words written by our founding fathers; and some of these are often believed to have a meaning directly opposite to what they clearly say. Congress and the government agencies further malign these constitutional rights by constantly passing laws which infringe on the very rights they were written to ensure.

Is it any wonder that there is more than a little disrespect for our government when government officials have become a model of negative values rather than standing for what is right?

How then should our Federal Government be reformed? Let it be by the true meaning of our Constitution. Please do not compromise this goal.

Thank you. [Applause.]

Mr. CLINGER. Thank you.

For our final comment on this segment, and after this speaker, I will call the next panel, No. 85.

STATEMENT OF SANDRA RECKSEIT

Ms. RECKSEIT. My name is Sandra Reckseit, I am the executive director for Ohio with United We Stand America, and I want to thank the committee for going out on the road to hear from the people outside the beltway. As one that has traveled the State for the last 7 months, I can tell you I have been in the cities in Ohio, the towns, the villages, and out in the country. People are ready for reform and they know it is going to take sacrifice but that sacrifice has to be fair, it has to be inside the beltway and outside the beltway.

Some suggestions that I have heard that I would like to pass on to you from people that I have talked to is start by looking at some of these outdated programs. You have programs from the 1930's that do not work any more. We need programs that are dynamic to meet the needs of today and go into tomorrow with some flexibility. And people are ready to do that. They are ready for reform, they will stand behind you if it is fair.

Last but not least, I would like to tell you that you are all invited, on behalf of United We Stand America, to our national conference next month in Dallas and there you could talk to people from across the country who will tell you their views. They are educated, they are informed on the issues and we would love to see you there.

Thank you.

[Applause.]

Mr. CLINGER. Thank you very much.

At this time, I would like—I think this has been very helpful testimony and witness that has been given here by the panelists. If we have time at the end of the session, I will continue with the lottery for those that have not yet had an opportunity to give us their views.

But at this time, I would like to call forth the next panel. I am sort of squinting over there to see if anybody has arrived, but they

are—and I will introduce them as they come to the table. Can we get some lights on over there? There we are.

The first speaker this afternoon will be William Lawrence, who is the executive vice president for TRW, a major U.S. corporation, vice president for Planning, Technology and Governmental Affairs. Mr. Lawrence was a key participant throughout TRW's 10-year restructuring project. Not an unusual activity for American corporations in this rapidly changing economic and technological climate, and I know we are going to have much to learn from his experience in that change and transformation that has taken place in TRW.

After Mr. Lawrence, we will hear from Frank Altimore, who is LTV Steel Co.'s vice president for business process design, and who was instrumental in helping LTV Steel join in some innovative partnerships designed to move the company into the next century. We look forward to hearing more about this today. I think we tried to stress our purpose in coming to Parma Heights today and hopefully later this month to Charlotte, NC and throughout the country, is to hear success stories. We are hearing some outstanding success stories and I think we are getting some models of things that we can pursue in Washington.

Following Mr. Altimore, we will have Mr. M. Thomas Moore, the chairman and CEO of Cleveland-Cliffs, Inc. He has moved his organization from a diversified company to one focused on its core missions, which you have heard about this morning. This is a very close parallel with regard to our efforts on the Federal level, and we certainly welcome him to the panel as well.

Karen Kleinhenz is the president of the Eastern Ohio Region of Society National Bank, a major financial institution in this part of the world. She has had a distinguished history with the bank and is now involved with First Choice 2000, which is a project designed to move that organization into the 21st century.

And I would now like to call upon our host Congressman, Mr. LaTourette, to introduce our fifth witness on this panel, Mr. Roger Sustar.

Mr. LATOURETTE. Thank you, Mr. Chairman, and just briefly, Roger Sustar is the founder and owner of Fredon Corp. in Mentor, OH and he also recently—for the other members of the committee—served as our delegate to the 1995 White House Conference on Small Business.

The reason that we thought Mr. Sustar would be a good witness, in addition to his business enterprises he is also very active with the two community colleges here in Cuyahoga and Lake Counties, and he has a program that has really revived an interest in the machine business, and he brings students in and for the first time in many of their lives, gives them an experience that hopefully will go on to a career of employment with real benefits, real health care benefits, real retirement security, and I think you will find Mr. Sustar's story to be very interesting.

In an interview the other day, he thought that government should act like business and that is that we should earn $1 in government before we spend $1, and I think that is pretty sage advice.

Mr. CLINGER. Thank you, Steve.

Ladies and gentlemen, welcome to the hearing. You may summarize—preferably if you would summarize as much as possible your

testimony, we are under some time constraints and we are going to try and limit your opening statements to 5 minutes or thereabouts, with the understanding that your prepared statements will be entered in full in the record and that we will certainly review all of the information as presented at the hearing. But if you could be as brief as possible in your oral statements, we would appreciate it.

So first of all, Mr. Lawrence, executive vice president of Planning, Technology and Government Affairs for TRW. Mr. Lawrence.

STATEMENTS OF WILLIAM B. LAWRENCE, EXECUTIVE VICE PRESIDENT FOR PLANNING, TECHNOLOGY AND GOVERNMENT AFFAIRS, TRW INC.; M. THOMAS MOORE, CHAIRMAN AND CEO, CLEVELAND-CLIFFS INC.; FRANK ALTIMORE, VICE PRESIDENT FOR BUSINESS PROCESS DESIGN, LTV STEEL CO., INC.; KAREN R. KLEINHENZ, REGIONAL PRESIDENT, SOCIETY NATIONAL BANK, AKRON, OH; AND ROGER SUSTAR, PRESIDENT AND OWNER, FREDON CORP.

Mr. LAWRENCE. Thank you and good afternoon. Mr. Chairman and other distinguished members of the committee, my name is William B. Lawrence and I am executive vice president for Planning, Development and Government Affairs at TRW Inc. I thank you all very much for inviting me to appear here today. I would like to share with you some of the experiences and the lessons that TRW has gained over the last 10 years or so from our streamlining and reorganizing processes.

We are delighted to have the opportunity to tell our story and we are especially pleased that the committee has selected Cleveland to hear first-hand what the private sector in this community is doing to reinvent, streamline and reorganize its own business.

First of all, let me say, by way of introduction, a few words about TRW. Headquartered here in Cleveland, our company provides products and services worldwide with a high technology and engineering content for the automotive, the space and defense and the information systems and services industries. In the United States alone, we employ approximately 36,000 men and women. Our revenues in 1994 were in excess of $9 billion. Indeed, both our revenues and our earnings for 1994 were the highest in the company's 94 year history, and through the first 6 months of 1995 we are well on our way to achieving yet another record. These results, we believe, were achieved by devising a performance-oriented game plan and then sticking to it. I would like to share with you some of the key elements of that plan. They may have relevance to the nature and the scope of the committee's inquiry regarding government operations.

The first element of our game plan was what we would call a critical reassessment of our distinctive competencies and the relative strengths and weaknesses of our businesses. What this did was to help us establish for the company a course of direction. And among other things, it revealed to us that we simply had more opportunities than we had resources to adequately fund. So our challenge was to select those highest priority businesses within the company where we felt that we were uniquely positioned to add value and to meet the requirements of the marketplace.

A second and a parallel effort to this was an effort to eliminate distractions that were depleting both our management and our capital resources. This required us to exit certain businesses and product lines. Included among those divestitures which occurred over a 10-year period were aircraft components, industrial products, electronic components, energy products, automotive after-market products and fluid power products. As a result of this exercise, over a 10-year period, we sold off over 60 businesses with revenues that exceeded $2.4 billion.

A third element of our restructuring plan was to improve our core businesses, those where we felt we had a strategic advantage through more efficient cost structures, improved quality and greater flexibility. This, as you know, is an ongoing process. It proved to be the most difficult, however, to get started because it required all of us to essentially change the way in which we do business. Internally, we had to break down bureaucracy and stovepipe ways of thinking. Externally, we had to convince customers and suppliers to team with us to tackle unnecessary transaction costs.

As a result of the efforts I have described, however, over the last decade, I believe we have been successful in re-engineering, re-organizing and restructuring our operations. Total head count within the company worldwide has been reduced from about 93,000 employees in 1985 to less than 66,000 today. At the same time, our revenues over that 10-year time span have nearly doubled and revenues per employee have increased from approximately 60,000 to 150,000.

The results in our space and defense business, a roughly $3 billion business, are illustrative. In the late 1980's, TRW employed in space and defense over 32,000 people. Today that figure is approximately 17,000. Despite these significant reductions, we have managed to maintain overall revenues and to dramatically improve our productivity. What did we do? In some cases, we re-engineered our processes, enabling us to take costs out, to reduce cycle times and to improve quality. In other cases, we worked very closely with the government, the Department of Defense contracting officers, to get their buy-in to streamline and simplify production processes, so that unnecessary steps and costs could be reduced.

At the operating level of our automotive business, we literally at any one time have thousands of initiatives underway to eliminate waste, improve quality and productivity and to cut costs. Last year alone in about a $5 billion business, we captured well over $200 million in cost savings that were required to offset cost increases and to meet price reductions—yes, price reductions required by our customers worldwide. From a product standpoint, the pricing reductions are very dramatic. Certain products, for example, are now selling for as little as 25 to 40 percent of what those same products sold for just 4 or 5 years ago.

Let me also point out that company-wide, restructuring has required us to also look at the way we manage the administrative functions of our business. In doing so, we have eliminated several layers of management. For example, where we formerly had, both at our space and defense and our automotive businesses, a staff at the sector level, we have eliminated those functions and those tasks have been combined either at the company headquarters or

in our operating groups, and in fact simultaneously at the company headquarters, we reduced our staff from over 600 employees to about 450, a 25 percent reduction, while at the same time our business revenues, as I mentioned earlier, had nearly doubled.

I do believe that the government can learn from what the private sector has done. To be successful, however, our experience indicates that certain prerequisites are fundamental. What are they? Leadership, vision and commitment at the top, I believe are critical. Ongoing communication and dialog with all stakeholders simply have to occur if you are going to accomplish buy-in and commitment to get the job done. Incentives and disincentives must be established to create the necessary motivation for change within the government. And finally, accountability and responsibility are absolutely necessary to empower people to act in non-traditional ways as agents of change.

I recognize full well that this approach represents a monumental task at the national level, but I believe that the Vice President's initiative to reinvent government represents at least in concept a good first step. I also believe that individual government agencies or branches are ripe for even more aggressive assessments of their purpose, their function and their resource requirements. With the leadership provided by the members of this committee, I have great confidence in our ability to effect meaningful change in the way government operates.

Mr. Chairman, other members of the committee, I thank you very much for the opportunity to offer these suggestions. I will be very happy to answer any questions you may have.

[The prepared statement of Mr. Lawrence follows:]

Statement of William B. Lawrence
Executive Vice President
Planning, Development and Government Affairs
TRW Inc.

Mr. Chairman, members of the Committee, my name is William B. Lawrence and I am Executive Vice President of Planning, Development and Government Affairs for TRW Inc. Thank you very much for inviting me to appear today before the Committee. Permit me to share with you some of the lessons and experience we at TRW have gained from the painful, but fundamentally necessary, streamlining and reorganization that we have undertaken over the last ten years.

We are delighted to have this opportunity, and are especially pleased that the Committee has chosen to come to Cleveland to hear first hand how reengineering, reinventing, or streamlining, whatever name you wish to give it, is being done in the private sector in this community.

First of all, a few words about TRW. Headquartered here in Cleveland, TRW is a company that provides products and services worldwide with a high technology or engineering content in the automotive, space and defense, and information systems and services industries. In the U.S. alone, we employ nearly 36,000 men and women. Our revenues in 1994 were in excess of $9 billion. Indeed, our revenues and net earnings in 1994 were the highest in our 94-year history. Through six months of 1995, we are well on our way to yet another record year -- and our stock price has recently reached all-time highs. These results were achieved by devising a performance oriented game plan and then sticking to it. Our customers have rewarded us with increased business, our employees with increased productivity and our shareholders with increased confidence and access to capital. This approach may have some relevance to you both as the guardians of our nation's public resources and the officials responsible for setting our long-term national priorities.

The first element of our game plan was a critical assessment of TRW's distinctive competencies along with the typical analysis of strengths, weaknesses, opportunities and threats for each of our businesses. This helped us establish a course of direction and, more importantly, revealed that we enjoyed a strategically target-rich mix of opportunities. That meant we had more opportunities than we had resources to fund adequately. Our challenge was to select those highest priority businesses where TRW was

uniquely positioned to add value and to meet market requirements. The outcome of this analysis was a clear plan of where TRW could invest its relatively scarce resources in businesses in which we enjoyed a strategic advantage. These were investments in our so-called core competencies -- things that we do very well -- better than others -- and that could help leverage our future.

A second and somewhat parallel effort was to eliminate distractions that were depleting both our management and capital resources. This required that we exit certain businesses, product lines and joint ventures. Included among these divestitures were Aircraft Components, Industrial Products, Electronic Components, Energy Products, Automotive Aftermarket Products and Fluid Power Products. As a result, over a ten-year period, TRW sold off over 60 businesses with revenues exceeding $2.4 billion.

This process has produced several benefits. It significantly simplified and focused management on the remaining core businesses and reduced associated overhead. Healthy, otherwise attractive non-core businesses were sold to others with strong strategic interest, where they can now flourish and attract greater resources. The divestitures also benefited TRW by eliminating businesses that consumed disproportionate amounts of management and capital resources. By freeing up and redeploying resources, TRW strengthened all its remaining operations. Finally, and probably most importantly to our creditors and shareholders, TRW was able to reduce its debt to very sound levels, creating greater confidence in our management, increased financial and strategic flexibility and a lower cost of debt. As with some cancers, early though painful surgery was the best prescription for a healthy recovery. Similarly, government might benefit by cutting out and privatizing non-core programs -- especially those that consume resources well beyond the social benefits derived.

A third element of TRW's restructuring plan was to improve core business operations through more efficient cost structures, improved quality and greater flexibility. This is an on-going process. It was the most difficult to get started because it required us all to change the way we do business. Internally, we had to break down bureaucracy and "stove pipe"

organizational thinking by building cross-functional, cross-organizational teams to tackle complex projects. Others have referred to this as creating a seamless organization. Externally, we had to team with customers to tackle unnecessary transaction costs so that we could meet their demands to reduce our prices and improve product quality.

In our automotive business, for example, the quality standards and systems expected of us were well beyond our then current practices. That also meant that, in order to earn a profit, product costs and productivity levels had to be substantially improved as well. We also needed to utilize our current capital assets more efficiently to induce shareholders and others to provide us with access to additional capital. In response, TRW reengineered, reorganized and restructured its operations resulting in a total headcount reduction from 93,000 employees in 1985 to less than 66,000 today. Despite the 30% plus headcount reduction and business divestitures mentioned above, revenues over that ten-year span have nearly doubled and revenues per employee have increased from approximately $60,000 to $150,000.

In our Space & Defense business, the story is just as dramatic. In the late 1980s, TRW employed over 32,000 people, while today employment is down to 17,000. Despite these significant reductions, we have managed to maintain overall revenues and improve productivity. In some cases, TRW reengineered its processes to achieve these performance improvements, and in other cases we worked closely with DoD Contracting Officers to streamline and simplify processes so that unnecessary costs and steps were eliminated. The overall effort involved consolidation of activities, elimination or combination of divisions, outsourcing of services, sale of assets to achieve greater asset utilization and front-end investment to facilitate significant changes in fundamental processes. We also worked with customers to redesign our production methods.

As an example, we are now attempting to produce avionics electronics side by side, under exacting automotive quality standards, with airbag electronics. This approach is designed to satisfy Military Specification --

so-called MILSPEC -- quality requirements and eliminate many layers of cost through economies of scale.

A second example is TRW's Universal Test Bed, which is a testing system designed by TRW, requiring only minor modifications to aid in the designing, problem solving and hardware testing phases of spacecraft programs. The system minimizes non-recurring engineering and development costs, shortens schedules, reduces technical risk and provides greater value to our customers. This represents another example of changing the way we do business, with increased focus and coordination and fewer people.

Restructuring has also required that we look at the way we manage the administrative functions of our business. We have eliminated several layers of management. Where we formerly had Space & Defense and Automotive Sector staffs, we have eliminated the sector functions and the tasks performed by them are now being performed by our operating groups and/or the company headquarters staff. Simultaneously, our headquarters staff has been reduced from over 600 employees to 450, a 25% reduction in headcount now supporting a $10 billion business.

At each operating division, we have thousands of initiatives underway to eliminate waste, improve quality and productivity and cut costs. Last year alone, TRW Automotive captured over $200 million in cost savings just to offset cost increases due to inflation and price reductions demanded by our customers. From a product standpoint, the pricing reductions are dramatic. Certain products, for example, are now selling for 25% to 40% of what they sold for just four to five years ago. To accomplish these reductions, we re-designed products, changed processes, worked with customers and suppliers and empowered our employees to implement changes.

In summary, TRW and the private sector respond daily to immediate, unsympathetic challenges to our economic performance. Customers demand and expect increasingly better products and quality for less price; shareholders vote every day with investment dollars on their assessment of our performance; and competitors exploit every opportunity to take away

our business. This environment is economically healthy and ensures that scarce resources are allocated to their highest and best use.

Our country also needs to ensure its economic health. It won't take Voodoo Economics to get there but it will take leadership. We need to prioritize our national needs -- that means spelling out what the government needs to do and, more importantly, what NOT to do. Second, we need to evaluate the capabilities and competencies of government as well as the private sector regarding high priority needs. This should lead us to award priority projects to the most efficient producers. Finally, we need to set realistic limits on the financial burden our people (and their corporations) are prepared to accept to fund national priorities. This will help define what priorities get funded and to what extent.

For our country to follow through on the above course of action and achieve similar results will likely require a downsizing and reengineering effort similar to those I have described for TRW. To recap, it will require the following:

1. We need to assess and select our core or fundamental national priorities. Based upon these priorities, we must determine the functions that are essential to be provided by government and how much we can afford.

2. We also must exit, outsource, or divest non-core functions, assets, or organizations. It's difficult to believe a government agency can manage a non-core function more effectively than the private sector.

3. Cost/benefit standards should be applied to all key activities and those that fail to meet an objective test should be discontinued.

4. The funds saved or generated by these actions should be used to pay down debt and bring our budgets into balance.

5. To enhance the performance of the core government functions, we need to develop performance standards and metrics that can be used

regularly to measure continuous performance improvement. Core functions that can't meet acceptable cost/benefit standards should continuously face the possibility of being discontinued or privatized.

6. To accomplish these objectives will require strong leadership at the top, broad-based communication of goals, objectives and measures, a multi-disciplined/cross-functional team of motivated change agents and a workforce empowered to act in non traditional ways.

I recognize that this approach represents a monumental task at the national level, but I believe the Vice President's initiative to reinvent government represents, at least in concept, a good first step. However, individual government agencies or branches should be ripe for even more aggressive reassessments of their purpose, function and resource requirements. Our Nation's stakeholders (voters and taxpayers) have given a clear message that change is needed. Our creditors worldwide warn us of our weak economic health by diminishing the value of our currency and requiring higher interest rates to compensate them for the higher risks associated with continuing budget deficits. We must earn back the confidence of our stakeholders by demanding of our government officials the same fiscal responsibility we demand of the private sector. While bankruptcy may be an option for uneconomic businesses, it isn't an option for our Federal Government. Both business and government are measurably better off if they tackle the tough problems early and live within their budget limitations.

Thank you, Mr. Chairman, for this opportunity to offer suggestions to the Committee on its important work.

I will be happy to answer any questions you may have.

FWC:dpb\7.12.95

Government Reform and Oversight Committee Response to Follow Up Questions

William B. Lawrence

Question 1). **From a federal government perspective, I have watched the federal government structure growing out of control. Today, we provide some services that we don't do well, services that the private sector could do much better and more efficiently. Referring to your organization's critical assessment of competencies, what were the criteria that helped you decide what your organization did well? How would you relate this to our federal departments and agencies?**

Response TRW's assessment of what we do well is determined first and foremost by our customers and in a broader sense by our shareholders and employees.

From customers' perspective, direct feedback on the quality and value of our products and services is obtained regularly through surveys, interviews and face-to-face meetings. It is also provided indirectly through market position and new business. By tracking TRW's performance on a range of dimensions (on-time delivery, warranty costs, market share, comparative costs, technology, and financial measures) we can profile how TRW performs compared to our competition. No particular measure is fully indicative of overall performance. However, understanding the performance profile allows managers to evaluate the cost or effort necessary to "close the gap" between where we are today and best in class. The cost to close the gap provides the basis for determining whether we should or can effectively compete and serve a defined market. While this process seems simplistic, it requires substantial analytical effort and assessment of how markets are likely to change in the future.

From a shareholder and employee perspective, we receive daily indications of how well we are doing. Shareholders judge the economic efficiency of TRW compared with a wide range of alternative investment returns and risks. Creating value is a simple concept but it demands constant attention to both internal operations and external benchmarks. The same can be said about employees. To retain the best and motivate them to perform at outstanding levels, they need to be trained, challenged, measured, financially incentivized and counciled. While payroll and headcount account for less and less of TRW's total cost structure, employees are essential to ensuring efficient and effective utilization of capital assets. Aligning each employee's pay with the company's operating and financial goals is an important step in achieving the required results.

Government Reform and Oversight Committee **William B. Lawrence**
Response to Follow-Up Questions

We would agree the federal government structure has grown out of control. Social engineering and politics have justified many government activities at the expense of economic cost/benefit trade-off analyses. You might find that several of our private sector conclusions apply.

1. First, a clear need exists to determine the fundamental range of activities that is appropriate for the federal government to do. All activities should be subjected to critical assessment, first for need and second for cost/benefit value.

2. Realistic performance measures should be developed for government functions -- from the overall mission to the multitude of activities required to perform the mission. Determine not only the real costs (which may require more sophisticated Activity Based Accounting systems) but also real value.

3. Compare the costs of functions (Postal Service, Education, Health Care, etc.) and individual activities within functions (mail handling, check payment, housekeeping, customer services, etc.) with other external benchmarks. Test the cost of providing functions or services against best in class organizations (private and public sector, foreign and domestic). Where costs are too high, determine how they can be corrected internally or out sourced to achieve cost reductions.

4. Evaluate occupancy costs and related fixed costs. Space cost and utilization -- buildings, warehouses, offices, land -- consume funds in terms of maintenance, heating/cooling, environmental clean-up, and so on. Where possible, consolidate, dispose, sell off, dense up, and close down unnecessary space. This reduces a wide range of hidden costs, including payroll. It also may provide a source of tax or lease revenue if and when the land or facility is converted for private use.

5. Finally, build clear and measurable incentives into achieving world class performance. Public officials should be required to report publicly their performance against defined metrics. Performance both against a plan and as compared to peers. In one sense the incentive is continued public confidence and return to office. More tangible incentives could be provided by bonus payments for best in class performers.

In the final analysis, authority, accountability and responsibility need to be aligned and incentivized. Until public officials have realistic public reporting responsibility for their effective and efficient use of public funds, measured against external norms, little justification or incentive exists to restructure or challenge the way things get done. We're hoping this will change.

Government Reform and Oversight Committee **William B. Lawrence**
Response to Follow-Up Questions

Question 2). **In your testimony, you describe the difficulty your organization had with improving core business structures due to the fact that you had to break down bureaucracy and change the way you did business. Restructuring the federal government bureaucracy that has been in existence for decades is one of our greatest challenges. Can you offer any suggestions in this context?**

Response The core missions of the federal government are of course contained in the U.S. Constitution. Such functions as providing for the common defense, establishing post offices, roads and a federal judiciary are among the government's central functions. However, the federal government has over time assumed numerous additional responsibilities not central to its core mission through the enactment of statutes and the promulgation of regulations. Examples would include federal roles in a broad range of volunteer service programs, job training programs, food stamps, low income weatherization assistance, subsidized housing, farm subsidies, energy research, etc. The list goes on and on. Clearly, the authorizing committees of Congress must look critically at each of these programs to determine if the federal government should be involved at all, and, if so, whether the optimum way to deliver these services is through a government agency. Typically, a governmental bureaucracy would not be the ideal mechanism through which to deliver effectively and efficiently many of these services. Where appropriate, government should contract out or privatize as many functions and activities as it can, even if it is determined that government oversight should continue. To accomplish these results, however, requires leadership -- leadership that begins, not within the bureaucracy but in the Congress and at the highest levels of the Administration.

Question 3) **As I am sure you are aware, the federal bureaucratic structure is rife with layers upon layers of management. Through your own personal experience of downsizing in TRW, what were the positive and negative impacts of peeling back these layers?**

Response Reducing layers and downsizing produced significantly more positive than negative impacts. The process was begun nearly ten years ago, which allowed us the opportunity to test the outcome of each step and fine tune subsequent actions. From a positive perspective, developing and downsizing produced the following impacts:

- Greater Management Focus on Core Activities -- After eliminating layers, top management becomes more involved in operations. We found disproportionate management attention was previously consumed by "fix-its" and non-core activities. Delayering exposed

these diversions and restructuring or divesting these activities eliminated the distractions.

- Greater Economic Flexibility -- With reduced levels of overhead and debt, we are better positioned to sustain the impact of business cycles. By paying down debt, TRW also freed up capital resources, thereby increasing strategic options for growth.

- Reduced Cycle Times -- The time required to sense the need to act and respond was greatly reduced. Transaction times were reduced, people spent less time on process and more on implementation.

- Improved Employee Morale -- Once delayering and restructuring are completed, core employees have greater comfort in the overall health of the business, a greater sense of responsibility and accountability (i.e., empowerment), a clearer sense of business priorities and direction and improved compensation tied to a stronger performing business.

From a negative perspective, the issues are more personal or transitional. We consumed significant energy, time and capital as we delayered and divested operations. We also retired, relocated or let go nearly 20,000 employees. To be fair with long-time employees, counciling, severance packages and relocation arrangements were developed, communicated and implemented. In the end, employees understood the need for change and were willing to buy into it if our actions were perceived as being done in a fair and balanced manner. Communication with those who remain was equally important to ensure job security and productivity were sustained.

Timing was another negative consideration. Like surgery, restructuring or delayering never occurs at the most opportune occasion. Layoffs occurred at times when national unemployment was already high and placement difficult. Sale of units occurred when the cost of money was high and average business values were modest at best. While our "surgery" and subsequent recovery period slowed the company's momentum, the health of the business has been strengthened measurably and clearly has been worth the pain.

Finally, and most importantly, we lost some focus on our customers: during restructuring the corporate focus was predominantly internal resulting in some loss of attention by management on the customer. With the benefit of hindsight, we might have avoided some performance criticisms had we developed a more extensive external communications effort as part of our internal restructuring.

Government Reform and Oversight Committee **William B. Lawrence**
Response to Follow-Up Questions

Question 4). You mention the performance standards and metrics that can be used to measure continuous performance improvements. Can you relate these standards to the federal government and give examples of what you have successfully implemented?

Response As I mentioned in my testimony, TRW monitors a range of financial and non-financial measures to assess both the current and strategic health of the business. Listed below are several that may be relevant to the federal government.

- Target Debt Levels -- In order to ensure both access to debt and low interest costs, TRW set target debt levels based on external expectations of top performing companies. Once set, the company took the actions required to reduce debt -- both sale of assets and operating improvements.

- Productivity -- Each organization has different means of measuring productivity. TRW used and monitored progress on such factors as:

  Revenues per employee (upward trend)
  Assets per employee (downward trend)
  Profits per employee (upward trend)
  Overall indirect employment (downward trend)
  Employees/sq. ft. of building (upward trend)
  Total numbers of facilities (downward trend)
  Number/dollars of assets sold (upward trend)
  Employee opinion surveys (benchmark and follow up)

- Financial Performance -- In addition to operating performance metrics, we set financial performance goals for continuous quarter-on-quarter improvement. As part of setting these goals, we publicly communicated them to our analysts and reported on progress annually. To regain credibility in the financial community, we had to demonstrate our ability to keep the promises we made. Only by up-front establishing of goals and measuring progress over time could we regain their confidence. Internally, these goals not only included targets relating to our reported financial results, but also other financial targets such as increased cash flow, asset turnover, reduction in certain expenditures, etc.

- Quality -- Customers are the final determinant of a business' ability to produce quality products and services. Internally, we began to benchmark TRW's operations against the Malcolm Baldrige criteria. Although we did not aspire to compete for the award, we wanted to adopt a common framework for achieving world class performance. TQM teams were established and chartered by our most senior executives in areas of most significant need of improvement. In addition, all operations developed quality metrics to measure

defects on a Parts per Million basis (PPM). PPM provides further opportunities to conduct root cause analysis and direct efforts for improved operations.

These are only a few of the initiatives and metrics TRW utilized successfully to restructure its operations. Most are fundamental to any organization producing either goods or services. We have not yet reached our goals but have set expectations within the company and with our analysts of continuous improvement that cause us all to stretch our efforts. We are investing more heavily in the training and communication necessary to empower employees to take the actions needed to meet our goals. Finally, people are paid and incentivized to perform.

Question 5). Most people acknowledge that if the federal government were a business it wouldn't survive with the amount of inefficient service delivery it currently provides What aspects of the private sector could be successfully incorporated into the federal government structure?

Response In the private sector, measurements or metrics are critical to determine progress against objectives. Financial performance is certainly one measurement. Return on assets employed and return on shareholders equity are other measurements, albeit ones that may not be exactly relevant to the performance of government. However, productivity measurements can be equally relevant to governmental organizations. These measurements could be applied in a variety of governmental organizations, including the Social Security Administration, the Immigration and Naturalization Service, the Internal Revenue Service, the Farmers Home Administration, et al. Productivity and efficiency gains are beneficial in that they free up scarce resources for higher value-added activity and insure that employees are fully engaged. Establishing these types of performance systems also requires that there be incentives for employees to achieve these goals. Accordingly, Congress should give some attention to broadening incentive compensation arrangements, thereby giving federal employees a financial stake in the achievement of objectives designed to bring greater quality, value and benefit to taxpayers.

Another factor important to enhanced performance is competition. Unlike the private sector, many government services are not challenged to perform because they have a monopoly on what they do. Consideration should be given to having certain government agencies compete for the customers they serve. This might be accomplished, for example, by out-sourcing some services, having multiple government organizations compete for performing the same service and/or a variety of other mechanisms that permit the recipients of government services to choose among available service providers.

Mr. CLINGER. Thank you very much, Mr. Lawrence, for your testimony. It has been very helpful. [Applause.]

Let me call now on Mr. Moore, chairman and CEO of Cleveland-Cliffs Inc.

Mr. MOORE. Good afternoon, Mr. Chairman and other distinguished members of the committee. I am very pleased to have the opportunity to speak to you about Cleveland-Cliffs' experience in reversing serious business losses. As a representative of a company that has been a part of the Cleveland business community for nearly 150 years, I am also pleased to join in welcoming the panel to Cleveland.

Cleveland-Cliffs is an iron ore mining company that manages five mines and pellet plants in Michigan and Minnesota with 5,000 employees and an annual production capacity of 35 million tons. Our only customer is the steel industry, and a number of steel companies have ownership interests in our managed mines.

Although the role of corporations and government are different, I believe there are certain common principles in the management of structural and philosophical change. To illustrate, first allow me to present a brief review of the great wave of change that has swept over Cleveland-Cliffs.

For 25 years prior to the 1980's, the iron and steel industries had enjoyed growth and prosperity and had expanded capacity based on forecasts of steel shortages. However, in the first half of the 1980's, the steel industry hit a depression wall and by 1986, five of the steel company partners in our mines had declared bankruptcy. Markets were stagnant, capacity in the steel and iron ore industries was reduced by 27 and 33 percent respectively, and industry employment fell sharply.

The market value of my company's common stock fell from over $500 million to less than $100 million. Our company had over $400 million of long-term debt and had reported significant losses. Our solvency was seriously questioned.

In the face of this ominous threat, Cleveland-Cliffs committed itself to elimination of extraneous activities, rededication to our core business, higher productivity, a return to business growth and ultimately reward for all stakeholders in the company's success.

At a time of much doubt, we moved to restore financial viability and confidence in the company's future. Many of the decisions were painful and counter-culture. In the 1980's, we announced new business strategies, sold assets, suspended dividends and used our remaining bank credit to raise cash and repay debt. We closed uncompetitive mines and restructured mining joint ventures, withdrew from numerous non-core businesses, froze salaries, tightened benefit plans, and reduced employment significantly.

In reducing the number of employees, we evaluated our essential needs and used attrition, retirement incentives and voluntary separations whenever possible. No arbitrary quotas were established. We approached employment reductions for competitive survival, not as a pure business strategy. Even a wage concession by mine employees was restored earlier than scheduled.

Notably, through decentralization and the various actions cited, we have reduced staff in our central offices by 50 percent since 1981, while strengthening professionalism and productivity.

Our faith in our core business was demonstrated by acquisition of a large competitor in 1986 at a time of widespread pessimism about the future of our industry and our company. We integrated the two companies effectively while simultaneously engaged in the larger restructuring process.

An important part of this process was building improved relationships with company stakeholders. This effort met with mixed success as certain stakeholders did not share our view of the future. As a result, Cleveland-Cliffs is probably the only U.S. corporation to have endured the combination of two proxy contests, two strikes and several partner bankruptcies during the last decade. Yet we have emerged, by staying the course, stronger and more focused, benefiting from the impressive recovery of the integrated steel industry.

Today, Cleveland-Cliffs manages nearly 50 percent of the North American pellet industry production capacity versus about 20 percent in 1986. Our worldwide annual sales capacity is 2½ times what it was in 1986. Employee productivity, compensation, benefits and community taxes have all risen accordingly.

As mentioned earlier, I believe there are certain principles from the private sector that can be adapted by government in respect to managing change and becoming more efficient. This has been demonstrated here in Ohio and Cleveland through the widely praised public/private partnerships. These general principles of changed management include challenging and sharpening the objectives and mission of each unit, decentralizing administration, flattening organizations to speed communications and eliminate unnecessary layers of management, merging similar functions to eliminate redundancies and confusion, prescribing broad policy and performance standards, leaving implementation to people who know what works best in their circumstances, and finally, not wasting time and funds trying to make more efficient those functions that should simply be eliminated.

Bold action is necessary to effect major changes, whether in a company's destiny or the budgetary status of government. However, the responsibility remains to avoid categorical abolishments without adequate evaluation. For example, certain functions by the U.S. Department of Commerce, which is the target of at least one dismantling initiative, are vital to the fair trade treatment of U.S. industry in an emerging new world economy.

In conclusion, I hope that the experiences and perspective of Cleveland-Cliffs have provided some analogies for you to consider.

Thank you again for the invitation and I would be pleased to try to answer any questions that the panel may have.

[The prepared statement of Mr. Moore follows:]

STATEMENT OF
CLEVELAND-CLIFFS INC
1100 Superior Avenue
Cleveland, Ohio 44114-2589
to the
COMMITTEE ON GOVERNMENT REFORM AND OVERSIGHT

HEARING ON GOVERNMENT REORGANIZATION
July 14, 1995

Presented by M. Thomas Moore

Good morning. Mr. Chairman and other distinguished members of the Committee. I am M. Thomas Moore, Chairman and Chief Executive Officer of Cleveland-Cliffs Inc, and I appreciate the invitation to describe Cleveland-Cliffs' experience in reversing business losses. As representative of a Company that has been a part of the Cleveland business community for nearly 150 years, I am also pleased to welcome you to Cleveland.

Cleveland-Cliffs is an iron ore mining company that manages five mines and pellet plants in Michigan and Minnesota with 5,000 employees and an annual production capacity of 35 million tons. We also manage two mines in Canada and Australia. Our only customer is the steel industry, and a number of steel companies have ownership interests in our mines.

The role of corporations is certainly different from that of government. However, I believe there are certain common principles in the management of structural and philosophical change. To illustrate these principles in action in the iron and steel industries, allow me to present a brief review of the great wave of change that has swept over these industries and Cleveland-Cliffs.

At the start of the 1980s, United States steelmakers employed more than 400,000 people. For 25 years until that time, the iron ore industry had enjoyed growth and prosperity. Both industries had expanded capacity in the 1970s based upon forecasts of steel shortages.

In the first half of the 1980s, however, the steel industry hit a depression wall that has been well-chronicled. In turn, Cleveland-Cliffs experienced a shattering of its traditional business structure. By 1986, five of the steel company partners in our mines had declared bankruptcy, and we faced stagnant markets with substantial unused production capacity.

In response to the deterioration in basic industry outlook, the steel and iron ore industries reduced capacity by 27 percent and 33 percent, respectively. Consequently, industry employment fell sharply.

The market value of Cleveland-Cliffs' common stock fell from $569 million in 1981 to $74 million in 1986. Our Company had over $400 million of long-term debt and had reported significant losses. Our solvency was seriously questioned.

In the face of this ominous threat to our survival, Cleveland-Cliffs had committed itself to a turnaround. This commitment led to elimination of extraneous activities, rededication to our core business, higher productivity, a return to business growth, and, ultimately, reward for all stakeholders in the Company's success.

At a time of much doubt, we moved to restore financial viability and confidence in the Company's future. Many of the decisions were painful and counter-culture. In the 1980s, we:

- Announced new business strategies.
- Sold assets, suspended dividends, and used our remaining bank credit to raise cash and repay debt.
- Closed uncompetitive mines and restructured mining joint ventures.
- Withdrew from numerous non-core businesses.
- Froze salaries, tightened benefit plans, and reduced employment significantly.

In reducing the number of employees, we evaluated our essential needs and used attrition, retirement incentives and voluntary separations whenever possible. No arbitrary quotas were established. We approached employment reductions for competitive survival, not as a pure business strategy. Even a wage concession by mine employees was restored earlier than scheduled.

Notably, through the reductions in non-essential businesses and decentralization of administrative functions, we have reduced staff in our central offices by 50 percent since 1981, while strengthening professionalism and productivity.

Our faith in our core business was demonstrated by Cleveland-Cliffs' acquisition of a large competitor in 1986 at a time of widespread pessimism about the future of our industry and our Company. This was an enormous challenge for us, but we integrated the two companies effectively, while simultaneously engaged in the larger restructuring process.

An important part of this process was building improved relationships with Company stakeholders. This effort met with mixed success as certain stakeholders did not share our view of the future. As a result, Cleveland-Cliffs is probably the only U.S. corporation to have endured the combination of two proxy contests, two strikes, and several partner bankruptcies during the last decade. Yet, we have capitalized on the steel industry's equally impressive recovery and emerged stronger and more focused. And last year, we acquired another significant iron ore competitor, which increased our annual sales volume by 65 percent.

Today, Cleveland-Cliffs manages nearly 50 percent of the North American pellet industry production capacity, versus about 20 percent in 1986. Our world-wide annual sales capacity is two and a half times what it was in 1986. Our shareholders have benefitted through a seven-fold return on investment since 1986, exceeding the popular market indices. Employee productivity is up, employee compensation and benefits have increased, and community taxes have risen.

In summary, Cleveland-Cliffs has a special perspective on change through our distinct experience of a long period of prosperity, followed by the anguish of depression, the stress of restructuring, and the satisfaction of solvency and renewed growth.

As mentioned earlier, I believe there are certain principles from the private sector that can be adopted by government in respect to managing change and becoming more efficient. This has been demonstrated here in Ohio and Cleveland through widely-praised, public-private 07/13 '95 12:42 These

General principles of change management that appear applicable to government reorganization include:

- Challenging and sharpening the objectives and mission of each unit.
- Decentralizing administration.
- Flattening organizations to speed communications and eliminate unnecessary layers of management.
- Merging similar functions to eliminate redundancies and confusion.
- Prescribing policy and performance standards rather than rulebooks; leaving implementation to local people who know what works best in their circumstances, and expecting accountability.
- Finally, not wasting time and funds trying to make more efficient those functions that should simply be eliminated.

* * *

Bold action is necessary to effect major changes, whether in a company's destiny or the budgetary status of government. However, the responsibility remains to avoid categorical abolishments without adequate evaluation. For example, certain functions in the administration of trade laws by the U.S. Department of Commerce, which is the target of at least one dismantling initiative, are vital to the fair trade treatment of U.S. industry in an emerging new world economy.

In conclusion, I hope that the experiences and perspective of Cleveland-Cliffs have provided some analogies for you to consider as you pursue government reform.

Thank you again for the invitation to present the Cleveland-Cliffs story. I would be pleased to answer any questions you may have.

Cleveland-Cliffs Inc

July 18, 1995

M. THOMAS MOORE
CHAIRMAN
AND
CHIEF EXECUTIVE OFFICER

Direct (216) 694 5400
Fax (216) 241-8642

The Honorable William F. Clinger, Jr.
Chairman, Committee on Government
Reform and Oversight
United States House of Representatives
Washington, D.C. 20515-3805

Dear Mr. Clinger:

Re: Hearing on "Creating a 21st Century Government"

It was a pleasure to appear before the Committee last Friday, July 14. I hope my testimony and that of other panelists and citizens in the Cleveland area has provided you and the other Committee members with useful insight.

I am writing to express concern about a false impression that may have been conveyed in the business panel's answers to a question about potential elimination of the Departments of Commerce, Education, Energy, and Housing and Urban Development. The essence of the business panel's response was that the focus should be on eliminating, merging, or re-engineering functions rather than hasty elimination of whole departments. These responses were consistent with the prepared testimony.

Unfortunately, in the brief time available, a Committee member interpreted the panel's responses as advocacy for retaining the four departments, per se. This is not a correct characterization because the panelists advised the Committee to reexamine the missions of all departments, and then evaluate their functions to determine what is essential, what can be merged, what hierarchies can be flattened, what can better be done by state and local governments, etc., and to expect restructuring to be a difficult and painful process as it has been in many companies. In summary, the panelists emphasized attention to functions, not "departments".

Following the hearing it was pointed out to me by a Cleveland-Cliffs' officer who attended the meeting that the Federal Yellow Book, published by Leadership Directories, Inc., could be useful in commencing a functional evaluation process. The various offices, sub-offices, programs, etc. of the four departments in question are listed in this publication; and the names and telephone numbers of an estimated 5,000 individuals are included.

Very truly yours,

M. Thomas Moore
Chairman and Chief Executive Officer

MTM:mjm
cc: Members of the Committee on Government
Reform and Oversight

1100 Superior Avenue Cleveland, Ohio 44114-2589 Telephone (216) 694-5700

Questions for M. Thomas Moore

1) In your statement you referred to the need to reduce the number of employees. Could you provide more detail about your utilization of attrition, retirement incentives, and voluntary separations?

2) I strongly agree with your statement that some general business principles are applicable to government reorganization efforts, such as creating effective missions and eliminating layers of management and redundancies. Please elaborate.

3) Please expand on your principle to leave implementation to the people on site who know what works best. How can we cut through red tape to make this possible?

Cleveland-Cliffs Inc

M. THOMAS MOORE
CHAIRMAN
AND
CHIEF EXECUTIVE OFFICER

Direct: (216) 694 5400
Fax: (216) 241 6842

July 31, 1995

Ms. Kristine Simmons
Committee on Government Reform
and Oversight
2157 Rayburn House Office Building
Washington, D.C. 20515-6143

Dear Ms. Simmons:

Re: Hearing on "Creating a 21st Century Government"

In response to Chairman Clinger's letter of July 18, 1985, I am providing as supplement to my testimony on July 14 the following responses to the three additional questions that have been raised by the Committee:

1) Staff reduction methods used:

- attrition - all positions that became vacant for whatever reason had to be rejustifed if desired to be filled. Otherwise, a hiring freeze was maintained; and responsibilities of retained positions were expanded.

- retirement incentives - employees who met certain qualifications were offered enhanced pension, insurance, health, and cash benefits if they opted to retire during a designated period of time.

2) Effective missions/decentralizing/redundancies:

- When Cleveland-Cliffs made its strategic decision to concentrate on the iron ore business, we realized that such businesses as electric power generation, timber harvesting and sawmill operations, water transportation of bulk commodities and oil and gas drilling were a detraction to our mission and capital needs. They were relinquished.

- Our operating units were made more autonomous and accountable. All functions that could best be handled at the operating level were decentralized. As a result of this comprehensive change, we were able to eliminate completely an entire level of management which was housed in "district" offices.

1100 Superior Avenue · Cleveland Ohio 44114-2589 · Telephone (216) 694-5700

3) People on site:

A General Manager is appointed to head up the management team at each of our operating units. The General Manager, who is essentially the chief executive officer at the mine, reports directly to a senior operations officer who reports to the Chairman. The General Manager confers with senior management on policy matters and is otherwise fully authorized to operate the mine within the parameters of general policies and budgets. The performance of the mine management team is measured in terms of pre-established objectives and budgets as to quality and cost of product; and the total compensation of the mine management team as well as corporate management is a function of performance.

I hope that this summary will satisfy the request, but more information can be made available if desired.

Very truly yours,

M. Thomas Moore
Chairman and Chief Executive Officer

MTM/na

Mr. CLINGER. Thank you very much for your testimony.

Next, I would like to call upon Mr. Frank Altimore, vice president for business process design with LTV Steel. Mr. Altimore.

Mr. ALTIMORE. Thank you, Mr. Chairman, members of the committee, I would like to thank you also for inviting me here to testify at this important hearing.

LTV Steel supports the current effort underway for your group to take a fresh look at how government operates. We especially commend the approach taken by this committee to hold hearings here locally to learn what other organizations have done to rationalize, re-invent and re-engineer.

My two colleagues preceding me in this discussion pretty much reflect the same kind of history that LTV Steel has had in the last decade of the 1980's. In fact, I happen to be one of the customers that Tom was referring to that went into bankruptcy in the middle of his turmoil of the 1980's. So I know precisely the problems that he faced and that TRW has faced as well, and LTV was not exempt from those.

LTV is the Nation's third largest steel producer, integrated steel producers. We operate a major flat roll producing facility here in the center of the city of Cleveland, it is the largest flat roll producing plant in North America. We also operate major facilities outside of Chicago, IL and in Hennepin, IL.

But I want to talk a little more in detail and focus in on a very specific initiative we undertook. We had an opportunity with a joint venture company to try out a new method of work system in a traditional kind of structured organization in the steel industry.

We formed a joint venture back in 1984 between LTV and Sumitomo Metal Industries of Japan and this joint venture is called LSE, the "L" stands for LTV, the "S" stands for Sumitomo and the "E" stands for electro-galvanizing, which is what this company does. LSE is a small plant located in our Cleveland facility, it produces zinc coated steel by the electrolytic deposition process for the automotive industry. It uses Japanese technology for that process but it also uses mostly American equipment for the installation.

We began design and procurement of this joint venture operation back in 1984 in an abandoned building in the LTV property. We currently have a work force that consists of 94 employees, all of whom are salaried, even though 71 of these employees belong to the United Steel Workers Union. We have 23 management people in this organization as well.

This joint venture was formed in 1985 in response really to the demand from the automotive industry for high quality steel for automotive exposed bodies that would withstand corrosion problems that we face in North America with salted roads, et cetera. If any of you have cars produced back in the 1970's, you know how they dissolve rather rapidly, and if you have bought a car since 1986, it still ought to look pretty good as a result of this new technology.

But we were looking at starting this plant operation in 1985 and as you heard from the previous two speakers, 1985 was not the world's greatest year for steel. We were faced at that time with about 1,200 employees laid off at our Cleveland Works facility and

we were about to start a whole new plant operation and make a major investment.

So we went to the Union and said look, we have an opportunity here to restructure the way we do work in this plant. We knew that what we had been going through for the last seven or eight decades in the steel industry was not going to produce the kind of competitive situation we needed to come out of this joint venture structure with, so we sat down and said let us try something new and different and we got the Union to agree that we ought to start with a blank piece of paper and redesign the whole work system. And that is what we did.

You heard some of the speakers earlier today refer to cultural changes that have to take place, the redefinition of work, the incentivizing of the workers. What LSE did was sit down and try and work out a new organization involving multi-skill work force and varying work assignments using a participative process. The quid pro quo that the company had to provide for the union to agree to this change in direction was that we would hire the initial group from the pool of laid off steelworkers. So we ended up then with having this new group of employees, 45 new employees, design their own work. We sat down and said here are some boundary conditions, but we want you to design the joint responsibilities, what the pay system should look like. We built a pay system that had a variable component in pay; that is, a gain-sharing component, so that as business improved, the employees' pay systems improved and if business was not so good, the company did not have to pay excessive amounts for labor.

So working together then, this group of 45 people designed their whole contract, if you will, with very radical departures from traditional designs. The point of all of this is that the people who were involved in the organization were responsible for designing the work, determining who did what kind of work, designing the pay system that they would be paid for the work, so that now we have an organization that is probably one-third the size of a traditional organization that would be operating the same kind of facility.

So when you are looking for ideas on how to get worker involvement, how to incentivize workers to become more responsive and involved in the business, get them to sit down and figure out if they were designing the work what would it look like. You would be surprised at the creativity and tremendous enthusiasm with which this is greeted, and you end up then with an organization that finds ways to implement the cost reductions, the improvements in cycle time, the reduction in waste that we are all looking for and is necessary if we are going to compete in the future.

These are some of the things that you might want to try to apply in small departments and various areas of government. Ask the workers what they think, you will be surprised I think sometimes at the response that you would get back.

Thank you again for having the opportunity to participate today and good luck in your effort. God bless you on that.

[The prepared statement of Mr. Altimore follows:]

L-S ELECTROGALVANIZING COMPANY
A HIGH PERFORMANCE ORGANIZATION IN ACTION

testimony of

F.O. Altimore
Vice President - Business Process Design
LTV Steel Company

before the

Committee on Government Reform and Oversight
United States House of Representatives

July 14, 1995
Cleveland, Ohio

Chair and Members of the Committee, thank you for inviting me here to testify before this important hearing. LTV Steel Company supports the efforts currently underway to take a fresh look at the way the federal government operates and we especially commend the approach taken by this committee to hold field hearings in order to learn what other organizations have done to rationalize, reinvent, and reengineer.

I would like to offer to the Committee a description of an innovative, high performance organization that we have created. It is focused on the customer and involves new approaches to work systems and organizational structure. I believe that you will find in this presentation some ideas that could be just as applicable to government operations as they are in the manufacturing sector.

LSE is a joint venture between LTV Steel, subsidiary of LTV Corporation, and Sumitomo Metal Industries, Ltd. of Japan (see Chart 1). The "L" stands for LTV Steel, the "S" for Sumitomo, and the "E" for electro-galvanizing, which is what the company does. Sixty percent of the LSE organization is owned by LTV and forty percent by Sumitomo. LSE is, in fact, two joint venture companies—LS-II, a fifty-fifty joint venture between LTV Steel and SMI, began operation in 1991 in Columbus, Ohio.

Chart 1
Joint Venture Structure

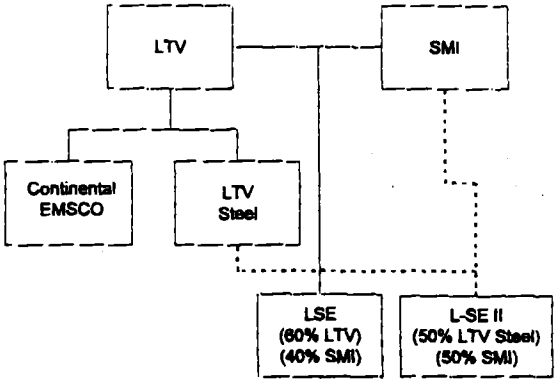

The L-S Electro-Galvanizing Company (LSE) produces zinc-coated steel for the automotive industry. It can electrolytically deposit zinc on one or both sides of the steel or differentially coat it. LSE uses a technology, developed by Sumitomo Metal Industries, Ltd. (SMI) in its Kashima plant in Japan, that consists of twenty vertical plating cells. Steel is continuously run through a bath of electrolyte between a pair of anodes. The anodes are made of an insoluble lead silver alloy, and the electrolyte consists of a buffered zinc sulfate solution. When an electric current is applied between the anodes, the zinc is deposited on the surface of the strip. About five thousand feet of strip are on line at any one time.

On the entry and exit terminals, the line speed is eight hundred feet per minute, and the process runs at 650 feet a minute through the cells. Capacity is about 400,000 tons a year, shipped by rail and truck. One hundred percent of the product is designated for the automotive industry for exposed automotive body panels.

This is a truly international venture in terms of the major components of the facility. The electrical systems were supplied by General Electric, the mechanical systems by Aetna Standard, the plating section technology by Mitsubishi Heavy Industries, and the computer systems by DEC and Bailey Controls.

Design and procurement began in 1984 in a building that had been abandoned at LTV Steel's Cleveland works. The building is about 890 feet in length and 460,000 square feet in area. LSE began installing new equipment, and one month later, well before the line was to

start operations, began hiring the workforce. The plant had a cold run in February 1986 and the first production in April. LSE produced its millionth ton of steel in August 1989, and its three millionth ton in February 1995.

LSE's current workforce consists of ninety-four employees, all salaried. There are seventy-one bargaining unit people who are also paid a monthly salary rather than an hourly wage rate. The bargaining unit people are members of Local Union 9126 of the United Steelworkers of America (USWA). There are twenty-three on the management support team, including three permanent Sumitomo engineers who act as technical support for the total operation, although the Japanese are not directly involved in supervision of the workforce.

LSE has five crews consisting of fourteen team members and one process coordinator—in traditional terms, fourteen bargaining unit people and one turn supervisor. The plant runs twenty-one turns a week, seven days a week, around the clock. This is accomplished by rotating the five crews, which is an interesting and unique innovation in the United States in terms of scheduling people.

BEGINNING THE JOINT VENTURE

The joint venture was formed in 1985 in response to customer demand. At the beginning of the 1980's, automobile companies were competing over who offered the best corrosion protection warranties. The only products available at that time to improve the corrosion resistance of steel body cars were hot-dipped galvanized products. Unfortunately, this process was not capable of producing the surface quality for exposed auto body panels such as hoods and fenders.

The electro-galvanizing process did produce that quality. American companies like USX had a limited capacity to electro-galvanize steel, but they could coat only one side of the steel. The technology existed that could electro-deposit zinc, which provided a much more uniform coating with much better surface characteristics. However, the necessary material could be obtained only from offshore producers, principally the Japanese.

Because of the demand from automotive customers, U.S. producers needed to install an electro-galvanizing capability. In 1983 and 1984, the steel industry began to search for the available technology to provide electroplated products for its customers.

LTV has had a long relationship with Sumitomo. In 1962, Sumitomo was installing a new hot strip mill in Japan and asked LTV to train their operators for this process. This created a relationship that made Sumitomo receptive to LTV's request, years later, for help with the new electroplating technology.

The joint venture was formed to provide both the technology and the expertise in operations to produce these products in North America.

The year 1985 was not a great year for the steel industry. In LTV's Cleveland plant, its largest flat rolled steel plant, which produced about six million tons of flat rolled steel a year, there were about twelve hundred steelworkers laid off. It was becoming obvious that "business as usual" would not keep LTV competitive. Changes were necessary to compete and to maintain profitability and viability in the international market.

LTV had an ongoing relationship with the steelworkers' union at the international level through its collective bargaining agreement. In staffing this new facility, LTV said to the union, *"We have a chance to try something new and different."* This began an investigation into better ways to work with each other, which led to joint labor-management involvement in participative systems, which in turn led to the development of the LSE organization.

NONTRADITIONAL ARRANGEMENTS

LSE is in a three-way partnership: with the steelworkers' union, with business, and with government (Table I). LTV and Sumitomo provided the funding, and they also divide the profits. The business and government partnership was more applicable at the beginning of the joint venture. In particular, the Department of Development in Ohio provided considerable help with grants for infrastructure work and training. The most important relationship, however, and the partnership that has to work every day, is between the workers and management.

TABLE I LSE PARTNERSHIPS
• United steelworkers of America and management • LTV and Sumitomo Metals Industry • Business and government

In the new organization, the union agreed to some very nontraditional arrangements, with the quid pro quo being that LSE would recruit the initial workforce from the pool of laid-off steelworkers in Cleveland. The initial group of forty-five employees were selected after a series of tests and interviews. The testing measured aptitude and technical skills, such as mathematics, mechanical, and electrical knowledge. The interviews were then designed to evaluate the individuals' attitude toward and interest in working as a team in a participative system involving multi-skills and varying work assignments. This group of talented individuals was hired and began their training six months in advance of the scheduled start-up of the line.

The training requirements were very broad. In addition to obvious training on operating the equipment, cranes, controls, etc., specific training in the technology of the electro-galvanizing process was required. This training was accomplished with classroom instruction

and team members were sent to Japan for one to two weeks of hands-on training on the sister line at the Kashima Works of SMI. Further, because the organization was attempting to implement an entirely new concept in managing and organizing work, considerable time was spent in team building activities, problem solving techniques and organizational behavior. These skills were put to the test when the new group was asked to design its own organization—complete with identification of required job functions, required skill levels, how to man and schedule the operation, and, most revolutionary: how much to pay themselves! The result of this activity is the LSE organization (Table II).

Responsibilities are handled jointly. Communication and training are emphasized much more than in other enterprises. The collective design of the organization has been a strength and a challenge. The design was developed not by a few who expected the rest of the workforce to simply accept it, but by everyone in the company working together (Table III). A vision was developed of what the steady state company would encompass and how the goals would be achieved, including start-up procedures. Management and the workers identified joint goals and philosophy.

TABLE II LSE ORGANIZATION
• Design • Nontraditional labor agreement • Joint responsibilities • Communication emphasis • Training emphasis • Strengths • Challenges
COMMUNICATION EMPHASIS
• New employee orientation • Daily interface • Monthly team meeting • Ad hoc problem solving teams • Customer visits • Committee meetings
TRAINING EMPHASIS
• Multiskills training built in • Internally generated • Linked to pay system

TABLE III ORGANIZATIONAL DESIGN
• Originally designed by all: —For a steady state operation —Addressed start-up procedures —Identified goals/philosophy
• Continually improving process —New employees —Renewal activities

Steel industry labor agreements contain many details that corporate-level management and national unions usually do not allow the local parties to address in traditional labor contracts. LSE's labor agreement puts a great deal of responsibility on the local parties, which alone can generate a significant number of nontraditional agreements. The labor agreement defines a participative process in skeleton form, leaving the meat to be put on by the people in the plant (Table IV).

TABLE IV NONTRADITIONAL LABOR AGREEMENT
• Participative process • All salary workforce • Pay for knowledge • Gainsharing • Emphasis on local party responsibility • Emphasis on problem solving

Pay for knowledge and gainsharing are two elements of the pay system considered nontraditional. In the steel industry, pay for knowledge involves paying skilled craft workers for what they know; they do not have to demonstrate their skills each day in order to be paid. People are taught as much as they can learn, and then are paid when they demonstrate competence. The expectation is that employees will do what they know how to do whenever necessary. Common sense becomes the primary consideration in this approach to pay. This concept has been rarely, if ever, applied in other organizations to such a broad scope of duties that mixes operation and maintenance. For gainsharing, the responsibility for determining what gain *is* and how to share it is in the hands of a committee comprising mainly the bargaining unit.

In the early stages at LSE, critics thought that management was letting the "inmates run the asylum" and that every worker would be at the top pay rate within two years. This did not happen because responsibility for the pay system was given to the workers—and they behaved responsibly.

JOINT RESPONSIBILITIES

Considerable time is spent solving problems jointly (Table V), probably much more time than processing grievances. However, the rewards are a higher quality of work and, for employees, a feeling of working on a worthwhile cause. Many of the issues handled jointly at LSE are reserved for management in traditional steel plants. For example, managers do not meet new workers until after they are hired by the bargaining unit hiring committees. These committees determine whether the new workers should be brought into the organization.

TABLE V JOINT RESPONSIBILITIES
• Hiring • Training • Scheduling • Pay systems • Process standards • Standing committees

Scheduling is also done by a bargaining unit committee. Management discusses the needs of the business with that committee, which develops the schedules. Steel plants operate around the clock in many operations, and the schedules sometimes seem to have been put together by a sadist. LSE scheduling committee members were eager to improve on traditional scheduling, but the first committee attempts were frustrating. They soon discovered that no matter who works on scheduling, it is not easy to satisfy everyone. The bargaining unit set out to achieve the unattainable goal of making everyone happy, but members were more successful when they spread the "misery" around—a much easier task.

The labor agreement sets parameters. It sets upper and lower limits, for example, on the pay-for-knowledge system. This is done in a traditional way each time the labor agreement is renewed. But how people get from the bottom to the top rate depends on the workers in the system, who are drawn primarily from the bargaining unit. There are some management representatives on the pay committee, but they are usually engineers who serve as a resource for developing skill blocks.

Standing committees at LSE are formed when a need arises to address an issue participatively. The labor agreement contains an annual review provision that determines whether a standing committee or a special committee is needed to work on a specific project. These committees may or may not meet regularly.

Among the standing committees at LSE is the safety committee, which meets regularly. The vacation scheduling committee, which sets vacations for the upcoming year, is on the other end of the spectrum, meeting once or twice a year. Many of the items covered in the "Standard Labor Agreement" are managed by the standing committees.

EMPHASIS ON COMMUNICATION

As noted above, there is an important emphasis on communication at LSE. For example, a day shift worker (7:00 a.m. to 3:00 p.m.) is expected to be at the plant at 6:15 a.m. to be briefed on what happened on the previous shift. At the end of that shift, the worker is expected to stay and brief the worker on the next shift. Overtime is paid for these communication times. LSE established this design element in 1985, and even though the results are hard to quantify, this "face meeting" is a very real asset in the smooth operation of the company.

LSE is small enough so that all employees can meet once a month. This meeting is not mandatory, but typically seventy-five to eighty percent of the workforce attend. Each month, the progress of the company is presented to the entire group, just as it had been presented earlier to management. All employees need to know the successes and failures of the business. At LSE, information is geared toward people, rather than managed away from them.

Another area that emphasizes communication involves the ad hoc problem-solving teams that are created as the need develops. Customer visits, still another area stressing communication, are not unique to LSE, but incorporate some approaches that are unique to the joint venture. At one of the stamping plants, our people can stop in, go on the shop floor, and ask the line operator, *"How are the solutions working to the problems we talked about?"* Informal determinations are then made about solving whatever is left of the problem. Reduction of scrap rates from five percent to zero is an example of the results of this relationship.

One of LSE's goals is that every employee will make at least one visit per year to a customer. These visits are made on an ad hoc basis and through continuous improvement teams that are formally established jointly by the company and the customer. For example, the GM Lordstown plant in Ohio has a standing committee consisting of a member of the LSE team, a customer technical service representative, and sales person. The committee meets monthly, more frequently if necessary, and works on a specific agenda of projects.

After a standing committee has visited a customer, it reports on the results of the visit at the next team meeting. This evaluation may lead to revised operating standards or other changes to accommodate a customer's requirements. These kinds of adjustments are regularly made at LSE.

EMPHASIS ON TRAINING

LSE is based on training and pay for knowledge. A program based on pay for knowledge requires a method to ensure that people can increase their skills. LSE has built multi-skilled, on-the-job training requirements into its scheduling pattern. A standing committee ensures that training needs are determined before a problem arises. This committee identifies the content of the training as well as how that training is to be made available. Will it be available through the staff of LTV Steel. Or will an instructor have to be brought in from an outside college to teach theory. Or can a qualified instructor be found among the team members.

LSE employees are never forced to learn a job, but the opportunity is always there. Employees decide what they will do, providing they are qualified. Each crew handles jobs differently, depending on how that crew regards the job assignments and the available talent pool. In some cases, during the "face" meeting fifteen minutes before the shift begins, the process coordinator asks who wants to do what, allowing workers to pick their jobs for the day.

Training is set up so that those who are not qualified to do certain tasks are able to train two full weeks, eighty hours a month, to learn a job. Once they are competent, they can do that job at any time. The objective is to teach each team member all the jobs, including maintenance jobs. This may mean that someone is packaging coils one day and is the entry operator the next day. Another team might choose to rotate assignments on a weekly basis. This process is very flexible, but the goal is to rotate all employees through all the jobs, switching on a daily or weekly basis among individual jobs.

Some of the training involves specific classroom versus on-the-job training. A new worker gets a base salary that is designated by the labor agreement. Then he or she receives on-the-job training for process technical skills, the skills associated with running the line. The training committee makes sure that a qualified instructor is there to train the worker, and that the worker's schedule permits training two out of every twenty-five turns. In other words, in a five-week rotating pattern, five days per week, there are two training turns available to learn process technical skills.

In addition, there are intermediate-level skill blocks, which are maintenance skills, associated with fixing the line. The line is shut down once a month for planned outage maintenance, an activity in which there are many training opportunities. People who want to learn maintenance skills do so during the outage time.

For example, in a plating operation, the alignment of anodes is a critical skill that may require two outages for a worker to learn. When the worker thinks he or she knows how to do it, that worker is allowed to lead the job the next time, and those involved in the operation, including the process coordinator, decide during this demonstration whether the employee knows the skill. Satisfactory completion of the training might add $30-35 a month to the workers' pay.

There are also advanced skills that require some theory. Unlike on-the-job training, in which an instructor and a trainee can be scheduled through the actions of a committee, a technical school instructor may have to be hired to teach theory. If someone at LSE can teach theory, classroom time still has to be scheduled, and this is more difficult to arrange than on-the-job training.

Everyone at LSE feels ownership in the training program. If something is not quite right, they fix it; they do not wait until the next labor agreement to argue about *how* to fix it. The key to LSE's position as a premium supplier in the industry is that the people in the system have designed the plan that generates their pay.

STRENGTHS

The strengths of the organization can be summarized as follows (Table VI):

- **Openness** — LSE is an open organization where people do not have to make appointments. They are, however, expected to exercise common courtesy.
- **Involvement** — LSE tries to make sure everyone has a chance to be involved in some kind of participative activity. The company does not force participation, but it encourages people to participate in some committee.
- **Commitment** — There is a high level of commitment at LSE because the comprehension level is high. If people comprehend what they are doing, it is easier to commit to mutual goals. Without that understanding, commitment and joint purpose are not possible.
- **Team spirit** — LSE has had nine years of operation, including some slow periods of low automotive demand. The spirit of the team was able to keep the business in focus. Team members know as much about the business as most middle managers in a traditional plant.

TABLE VI
STRENGTHS
• Openness • Involvement • Commitment • Team spirit • Business focus
CHALLENGES
• Balance people and production concerns • Maintaining "new style" • Time • Easy to promise. . .hard to keep

CHALLENGES

- **Balancing people and production concerns** — The bloom on the participation flower is very fragile, and the chill winds of production can cause it to wither. But with good tools, good soil, and good stock, new blooms, as many and as nice as before will appear.
- **Time** — This resource cannot be over-emphasized. The innovations that LSE has undertaken take time to accomplish. If this is not realized, trying to make a success story out of the efforts is difficult. The innovations must be given the time they deserve.
- **Easy to promise. . .hard to keep** — In trying to ensure that people understand they are an asset and not a variable cost, management may say something that may be interpreted as a promise. Although management does not intend to break this "promise," it is sometimes perceived that way. Extra care must be taken to avoid promising something that is difficult to deliver.

LSE is committed to being the number one electro-galvanizing supplier. This is a challenging goal that cannot be accomplished without the support of both management and the workforce acting together as partners.

Labor-management innovations promote an atmosphere of self-worth, respect, and dignity throughout the company. All members of LSE have been able to realize this, from top management to individuals who work on the floor. In this type of system, a worker does not punch in, do a certain amount of work (or the least amount that can be gotten away with under the traditional way), and punch out. At LSE, people go to work because they want to, because they feel they are needed, and because they make a significant difference.

Questions for Frank O. Altimore

1) Your organization certainly has a new and innovative approach to the daily functions of a business. I would like some of your opinions on how the federal government structure could incorporate openness, involvement, and team spirit throughout its agencies and departments.

2) What is your position on the elimination of each of the following federal departments: Commerce, Energy, Education, and Housing and Urban Development?

LTV Steel Company

LTV

July 28, 1995

Honorable William F. Clinger, Jr.
Chairman, Committee on Government Reform and Oversight
Congress of the United States
House of Representatives
2157 Rayburn House Office Building
Washington, DC 20515-6143

Dear Congressman Clinger:

Thank you for your kind remarks regarding my participation in your committee's recent hearing in Cleveland. It was an honor for me to have that opportunity, and I was stimulated and encouraged after hearing the testimony of all the participants. I am particularly impressed with the thoroughness and determination exhibited by you and your colleagues.

In response to the questions you posed in your letter of July 18, I offer the following thoughts.

The application of worker participation methods to federal government structure and activities, I believe, would have significant impact on efficiency, size, and ultimately cost. There are several key aspects of designing such a system. First, the function, department, agency, or unit activities should be defined in terms of identifying the *customer* of the product or service that it is to provide. Second, what are the characteristics of that product that are required to satisfy the customer. Third, what are the key variables, or steps, in the process, that impact the product attributes. Forth, what are the limits or range of variation for each of those variables that must be controlled to assure the product meets the customer's requirements. Fifth, how is the work best organized to accomplish the complete process.

We have found that the best way to implement such a change is to envision the process from start to finish—draw a "map" or flow chart of the present process. Then, with a small team, imagine what the process would look like if it worked perfectly. Comparing the two process flows will identify many opportunities for improvement, or better still, may result in a completely new design.

This type of activity can be carried out in small departments or sections, or can be applied to very large organizations. The key to achieving results is to break the process down into small, manageable pieces and assign design teams of the workers involved in the process to come up with a new design. The result, then, has a high probability of success because those who have *responsibility* for the process created the design, and therefore have true ownership.

This is a very short, cursory answer to a very large question. There are many companies, like LTV Steel, who have moved toward more worker involvement in the design of work. Workers have an intimate knowledge of the process they work in—what works and what doesn't. They represent an untapped resource, and when properly focused, empowered, and rewarded, produce significant breakthroughs.

With respect to your second question, LTV Steel generally supports efforts to reduce unnecessary spending and bureaucracy in the Federal Government. We have extensive interaction with the Department of Commerce and we can offer comments on current proposals to eliminate or restructure that Department. We have almost no direct experience with the Department of Education and Housing and Urban Development, so would find it difficult to remark specifically. Similarly, although we have some involvement with selected programs of the Department of Energy, they are narrow in scope and do not give us the perspective from which to discuss the viability of the entire Department.

With regard to the Department of Commerce, while we vigorously support the current effort to achieve a balanced budget, cut wasteful Government spending, and rationalized Government structure, we also recognize the historic role Commerce has played, as the one Government Agency whose pure mission is to promote U.S. business interests. Therefore, while some changes may be in order, we think the **essential functions** at Commerce must be maintained together in a single Cabinet-level agency, with adequate funding and personnel.

Over the years, the Department of Commerce, in the trade area especially, has served the steel industry and the entire U.S. economy extremely well. Following are a few examples of how Commerce is providing outstanding leadership and service to steel and other industries:

- Ever since 1979, when Commerce first took over the job of administering U.S. antidumping and countervailing duty laws, it has performed this task in a fair, effective, and impartial manner that has served the U.S. national interest.

- In the closing days of the GATT Uruguay Round talks, Commerce exerted strong leadership that, in the end, helped preserve the effectiveness of U.S. antidumping law.

- Throughout the ongoing Multilateral Steel Agreement (MSA) negotiations, Commerce has taken a strong and consistent position in defense of a comprehensive, effective, and enforceable MSA that keeps U.S. trade laws and trade law rights fully intact.

- Commerce has excelled at developing information on foreign barriers to market access and providing export-related services to U.S. manufactures-activities which are increasingly important to the U.S. steel industry and its customers.

- During the NAFTA negotiations and in the period leading up to passage of the bill implementing the North American Free Trade Agreement, it was often Commerce that provided the critical analysis to steel and other industries about the potential benefits and costs of the important agreement.

- Whether it is the U.S. - Japan auto talks or the planning for a hemisphere-wide free trade agreement, steel and other industries—as well as U.S. trade negotiators—have come to rely on the substantial regional and industry expertise that exists at Commerce.

LTV Steel, also supports maintaining the current private sector advisory committee system which, as previous Congresses and Administrations have recognized, serves the national interest at virtually no cost to the Government.

Finally, I would like to thank you again for the opportunity to participate in this process, and wish you and your colleagues every success. America needs it!

Sincerely yours,

F. O. Altimore
Vice President
Business Process Design
LTV STEEL COMPANY

Mr. CLINGER. Thank you very much, Mr. Altimore, we appreciate that.

I am now pleased to recognize Karen Kleinhenz.

Ms. KLEINHENZ. My name is Karen Kleinhenz and I am president of Society National Bank's East Region.

On behalf of KeyCorp, I would like to thank you, Chairman Clinger and members of the committee for giving us the opportunity to talk with you today.

KeyCorp is a $68 billion multi-bank holding company that currently operated over 1,400 branches and affiliates in 25 States stretching from Maine to Alaska.

What I would like to talk about this morning is a little bit about the strategic planning effort or the corporate restructuring that is not yet complete at KeyCorp, but in fact we are in the midst of now as we speak, and that planning effort is called First Choice 2000. It is probably about this point in my remarks that I would normally mention that KeyCorp is this country's 10th largest banking organization. However, that leads immediately into the reason for our restructuring and that is what is happening today in the financial services industry and the rapid consolidation that is taking place among banks.

When my remarks were drafted, we were indeed this country's 10th largest bank, but already with two announcements this past week and most recently in the last couple of days the announced merger of the National Bank of Detroit and First Chicago, our scene is changing much more rapidly than we could have ever even imagined 5 or 10 years ago.

So we need to restructure and think about the way we do business for many of the same reasons that my associates have spoken about, but we are probably an industry that is most recognized as changing beneath our feet. Our competition is changing, we continue to compete with the same types of traditional organizations that we have in the past, but our competition now includes such non-bank companies as Sears, GE, Fidelity and so on.

We need to change because lifestyles are changing, demographics are changing, baby boomers are aging, a tremendous amount of wealth transfer is just beginning to take place. The way we live and work is not the same as it was in the not so distant past. Two-career families, many mothers working outside the home, the way people would like to access financial service companies, the way they would like to get their money when they want it, how they want it, is not the same as the 1950's 9 to 2:30 hours that most of us can remember for traditional bank offices. And finally, we need to change and we want to change because of the rapid technological revolution that is occurring. Our industry is based on technology and the ability to move funds and move paper and deliver products and services in very rapid fashion. Technology is going to change the way people do their banking in the future and society must respond to that.

We started by first defining where we wanted to go and what our vision was for the future. And that vision is to be the first choice of those seeking world class financial products and services. Once we knew where we wanted to go, we also defined what the core values of our company were, those basic guiding principles which un-

derlie and form the foundation of everything we do. And those are things such as quality, such as protecting the integrity of our employees, of our shareholders and of the communities that we live and do business in.

From that came First Choice 2000 or the defined strategic planning initiative, and that has five core ingredients. The first, as has already been talked about in several ways today, we needed to define what we did best and we will concentrate now on four core businesses which we view as our inherent strengths, and those are community banking, private banking, national consumer finance and corporate finance.

The next core ingredient was to develop customer segmentation strategies so we can match responses to needs rather than forcing customers to adjust their needs to what we have to offer. And simply put, this is designing our company around segments of customers, instead of designing our company around products, which we hope the customers will be interested in.

The third core ingredient is an emphasis on technology, which I have already mentioned, through which we can respond in a tailored way to needs and do so quickly.

The fourth is a reliance on sophisticated marketing data so we can pinpoint customer needs.

And finally, regionalization which will allow us to harvest the efficiencies of operating as one bank nationally.

The hallmark of our effort involves the customer and really keeping the customer needs and the customers desires at the forefront of our thinking as we develop these strategies along the way. We need to balance the needs of all of the stakeholders in our company and that is the customer, that is the employee, that is the shareholder group and that is the community. And we have tried to do that very carefully.

One of the major foundational aspects of what we are doing is to keep decisionmaking as local as possible, recognizing that how we do business here in Cleveland, OH and what the customers in Cleveland, OH want in their financial services may be similar to customers across the country, but in fact there are very specific differences to different parts of the country, different kinds of cities, sizes of cities, be they large metropolitan areas, mid-size cities or rural small towns in which we operate a large number of branch banks in other parts of the country. So we designed our system with the user in mind.

In conclusion, I would say that we are feeling quite successful in that effort and that every aspect of what we are doing, every project, every action of our jobs is taking place to focus profitably on satisfying customer expectations whomever that customer may be, whether that customer be the person who needs the value priced checking account or that person be someone on the other end of the scale who is in the market for more sophisticated products and services. We feel our success depends on capable leadership, which not only understands customer expectations, technology and the global marketplace, but equally as important, as Frank said, understands people, their responses and their needs as we craft our strategies for the future. Thank you.

[The prepared statement of Ms. Kleinhenz follows:]

Testimony Of

Karen R. Kleinhenz

Regional President
Society National Bank
A KeyCorp Bank

Before
The Committee On Government
Reform And Oversight
United States House Of Representatives
July 14, 1995

I. Introduction

Mr. Chairman:

My name is Karen Kleinhenz, and I am the president of Society National Bank's East Region.

On behalf of KeyCorp, I would like to thank Chairman Clinger, Representative LaTourette and the Committee for this opportunity to appear before you today to address issues of Executive Branch reorganization. We're honored to be part of this distinguished panel and to share some insights on how one nationwide banking company has reorganized itself to best serve our customers.

We are part of KeyCorp, which is the nation's 10th largest banking company. We have $68 billion in assets and more than 1,400 branch and affiliate offices in 25 states stretching from Maine to Alaska.

We are the nation's third largest small business lender, its fourth largest agricultural lender, the seventh largest consumer lender, fourth in equipment leasing and ninth in corporate lending.

I mention these statistics to underscore the breadth and complexity of our operations. We have eight million customers – which means that our customer base is the same size as the populations of Sweden and Switzerland.

These numbers also suggest that – while the parallels are far from perfect – we as a private company must address on a trans-continental scale some of the same challenges facing our government: Specifically, how do you best structure and manage a nationwide organization to deliver an array of products and services responsively and efficiently?

As does the federal government, we have staffs and offices across the country on street corners, main streets and in malls in hundreds of communities. We're not as ubiquitous as the Post Office, but we're close.

And we, like the federal government, must respond to infinite permutations of needs and dreams – buying a home in Anchorage, Alaska or Tampa, Florida; building a business in Wyoming or Vermont; crafting a care-free retirement wherever one wants – or what is more mundane, getting one's banking business done at 10 p.m., after the kids are finally asleep.

It may be helpful to this Committee's deliberations if I can briefly outline some of the ways in which KeyCorp is reorganizing to help our customers meet those needs and reach those dreams.

II. Responding Locally; Operating Nationally: Goals and Process

The short answer is "First Choice 2000," KeyCorp's business strategy for the next five years. This is our roadmap to banking's future. It concentrates our efforts on four core business segments and it puts an emphasis on local control and decision-making.

It also allows us to respond individually to these *specific and infinitely variable needs* of our customers – whether she be an apple farmer in Central Washington, a machine shop operator in Dayton, Ohio or an inner city home owner in Syracuse, New York.

The "First Choice 2000" name reflects the aspirations which fuel the strategy: to be the first choice as we approach the next century of customers seeking world class financial products and services; the first choice of employees because of the ways we manage talent; to be the preferred financial services institutions in our communities, because of our civic involvement and, from our shareholder's standpoint, to be among the top 10 leading financial service firms.

The reorganization began last August with an intense, six month long reexamination of who we were, what we did best and where we wanted to go. With the involvement of several consulting firms, over 100 employees from across the company, including the most senior executives, divided into four project teams which set about analyzing our operations.

Historically, KeyCorp has had a strong local presence in communities across the country. However, we were also a national bank. The task has been to balance our neighborhood responsiveness with the national efficiencies found in standardizing some products and operations.

These teams came back this past January with their preliminary synthesis of a corporate strategy built around core themes and initiatives. The guiding principle would be to reorganize around customer segments, not around products.

Such a transformation may seem Herculean for an organization our size. Indeed, it is a major undertaking that is still underway. Yet, we submit, given the nature of the American population and given the competitive and cost pressures of the times in which we live, it is a strategy which has much to commend it.

The strategy has five core ingredients:

1. *A concentration on four core businesses*, which we see as our inherent strengths – Community banking, private banking, national consumer finance and corporate finance;

2. *Customer segmentation strategies*, so we can match responses to needs, rather than forcing customers to adjust their needs to what we offer;

3. *An emphasis on technology*, through which we can respond in a tailored way to needs – and do so quickly;

4. *A reliance on sophisticated marketing data*, so we can pin-point customer needs;

5. And *regionalization*, which, by 1997, will allow us to harvest the efficiencies of operating as one bank nationally.

I might add that this last point, regionalization, is a direct benefit of the recently passed Interstate Banking act. Without its passage we would still need to pursue this strategy, but we would be burdened with operating as 15 separate banks, with 15 boards, 15 charters, and all the complications of a more contorted regulatory maze.

III. The Ingredients of Responsive Management

The common intention knitting these organizational elements together is to respond to the customer. The guiding vision, the pole star as we navigate to the 21st century, is the shift from an organization structured around the products we offer to one organized around the needs and expectations of our customers.

While this is not a new thought these days, I'd like to elaborate on several ingredients of our approach to responsive management in financial services which may be most relevant to reorganizing government.

Core Businesses: We believe that the future belongs to those who specialize. We can't be all things to all people. We have chosen to capitalize on core relationships and competencies, such as small business and private banking.

Customer Segmentation: To respond to the different needs of different markets and customers, employees at the local level have much more authority to make decisions today – they know their customers; they *live* in their communities. In the future, branches themselves will be increasingly customized to specific customer segments, such as retirees or small businesses.

As a result, bank employees will need to be more knowledgeable and better trained, because they will be serving an advisory role, in such matters as investment management and financial planning, not simply a sales or clerical role.

Technology: Rapid technological changes are now allowing us to meet the customer where he's at. He can have control over when and how he banks. ATMs, 24-hour customer phone support, interactive video banking, the coming of on-line at home banking all put at our disposal tools to serve customers that didn't exist a decade ago.

The United States now has 23 million cellular phone customers – up from nearly zero a decade ago. It has 38 million subscribers to the Internet. Roughly one-third of all homes have a personal computer – thus setting the stage for remote banking.

Already at KeyCorp, for example, our 24-hour, 7-day a week telephone centers for customer service, telesales, a small business resource center and a customer infoline. These handle more than 3 million calls a month.

As evidence of these vast new frontiers technology has opened for more responsive customer service, the staffs at these Centers now, day or night and immediately, can answer customer questions about their accounts and other

banking relationships, resolve problems and serve as a 24-hour sales office. Each month this year, over 2,000 customers have applied for loans over the phone. In this, banking's fastest growing delivery channel, customers do their banking on their schedules, not ours.

Right Time Marketing: Technology has another pay-off, as well, in our quest for responsive management. We are moving from mass marketing to targeting demographic segments – and ultimately tailoring our marketing to each customer individually.

It is a shift from "mass" to "me" marketing, one that has been made possible, again, by the immense, high-speed processing capacity of today's computer technology. For example, we have an initiative called TIM, or Triggered Immediacy Marketing. TIM lets us pin-point other products which may be of interest to our new loan customers.

It automates the demographic, financial and lifestyle information collected from 120,000 monthly loan applications. Analyzing that information, we can generate letters and phone calls to new customers about other products, having compared their profiles to the interests of other, similar customers.

Granted, in the government context, this approach can raise issues of privacy and individual freedom. But the point is not the specific application, but the intention to find ways of responding to constituents and customers as distinct individuals, living in very different communities, rather than as undifferentiated categories living in Anywhere, USA.

IV. The Roots of Change

Let me put in perspective why we have had to change our ways of doing business. Banks have been losing market share – constituents – the past 30 years. Banks have lost much of their dominance of the financial marketplace.

- Banks' share *of all financial assets* held by financial institutions has dropped almost in half, from 40 per cent in 1973 to 25 per cent in 1993;
- Commercial lending at large banks – historically the core of the banking business – has dropped from 65 per cent of the total short term borrowing of non-financial companies to 36 per cent;
- Bank's share of business credit shrank from 45 per cent in 1980 to about 30 per cent by the third quarter of 1993. This is while total business credit in the U.S. *grew* from $2 TO $3 trillion.
- In 1983, the U.S. had three of the world's largest 20 banks in assets; today, no american bank is in the top 20. (The closest is Citicorp, at 29.)

The largest American financial institution is American Express. Banks today must compete with non-banks, such as Sears, Merrill Lynch, General Motors and General Electric.

The banking industry, in short, has been forced to restructure itself dramatically.

If this historical trend is specific to the banking industry, another the Goliath presence of the Baby Boom generation is not. Its impact on the delivery of services, both governmental and private, is a defining force of our time. Between 1990 and 2010, the number of Americans in the 45 to 54 age range -- the post-World War II Baby Boomers -- will increase by 69 percent.

This generational tidal wave will be shaping the products, services and delivery systems in banking and government for years ahead. One bank consultant, Edward Furash, explains their banking impact this way:

> "The demographics point to a generation of Baby Boomers that is, on the whole, better educated, more sophisticated, more demanding, and much more comfortable with technology than its predecessors. They want control, information, a wide variety of options and flexibility.

They will want more products, and more information about those products. They will demand more control and convenience. To successfully compete with non-bank financial services companies, banks must tailor products, services and delivery channels to meet the changing needs, lifestyles and preferences of Baby Boomers.

Cannot the same be said for government itself, facing as large a constituency as these Baby Boomers?

In short, this Committee faces a market, as it were, in many ways similar to that facing other nation-wide, service organizations. It is a one demanding respect and attention – and demanding it either through their pocketbooks or their votes and support.

These constituents require a new kind of response from the institutions that are the underpinnings of their communities, be it banks or government. This Committee is responding to its Members' and the American people's sense of dissatisfaction with the ways that the federal government, itself possibly the ultimate service business, delivers. We in banking are responding to a different, but related, constituent dissatisfaction. Your constituents express dissatisfaction with their votes; ours do so with their feet.

KeyCorp's First Choice 2000 is one model, which we hope can be instructive or, at the least, though-provoking – a model which keeps its eye on flexibility, local control, choice and, ultimately, the customer.

ooOoo

Questions for Karen R. Kleinhenz

1) In your prepared statement you advocate responding locally and putting emphasis on local control and decision-making. I agree that some of the functions of the federal government can be better carried out by state and local government structures. Could you explain the pros and cons of local decision-making and your suggestions for our localization efforts?

2) What criteria was utilized by Society National Bank in forming the elements of the four core businesses, and how would you suggest incorporating these elements within the federal government structure? Once the core elements were agreed upon, were the discontinued functions of your organization transferred or eliminated?

ON LOCAL CONTROL AND DECISION-MAKING

U. S. banks, like other corporations and companies, are learning that in the competitive environment they operate, long-term profitability ultimately depends on satisfying customer needs. That's difficult to achieve from a centrally-managed, corporate-headquarters-driven approach to business. One of KeyCorp's strengths has been in designing a degree of autonomy into our various branches and regions around the country in terms of pricing, product sets, and community-relations initiatives, for instance. While we offer our 1,300 "stores" the capital strength, product-development and technology expertise of a $68 billion financial-services company, delivery is very localized, and we constantly ask our salesforce in the field to feed back useful information into the corporate "clearinghouse."

Indeed, our First Choice 2000 strategic plan calls for redesigning our branches around the country into facilities focused on certain customer types and their particular locations. Put simply, branches will no longer be generic, one-size-fits-all. A KeyCorp branch located adjacent to a college campus in Ohio will offer different products, staff expertise and delivery methods than one in small, farming community in Washington.

Companies that don't listen to American consumers, who are sophisticated buyers of financial services, technologically literate, and accustomed to making choices based on their schedules and needs, will not be profitable for long.

DETERMINING KEYCORP'S FOUR CORE BUSINESSES

KeyCorp's First Choice 2000 strategic plan grew out of an exhaustive, eight-month analysis of the company's lines of business by a team of about one hundred managers and staff from across the company, led and championed by President Robert Gillespie. The group examined business process, competition, financial returns of various product lines, and costs, all within the context of a willingness to create a new company that could evolve to a highly profitable, nationwide provider of financial services between now and the year 2000.

The four business lines chosen represented areas where we had competitive advantage in terms of people, products, marketshare, technology, and distribution. In one case, national consumer finance, First Choice 2000 calls for the development of a new line of business that groups several former areas, and adds new product types. Generally, however, the plan sets out to double the number of product relationships we have with our 3.4 million retail customers from 1.9 to 3.8.

The strategy has -- and will continue to -- involve the acquisition of businesses, outsourcing, divestitures, and other activities that will focus KeyCorp on these core customer segments, efficient delivery methods geared to those segments, and double-digit earnings growth.

Mr. CLINGER. Thank you very much, Ms. Kleinhenz.

Finally, the final panelist on this panel is Mr. Roger Sustar, president of Fredon Corp. Mr. Sustar.

Mr. SUSTAR. Thank you, Mr. Chairman Clinger, Congressman LaTourette and the rest of the panel here. This is truly an honor to be sitting up here with Cleveland-Cliffs, LTV and TRW and Society Bank—wow.

I am just a little tiny corporation out in Mentor, OH, we are called Fredon Corp. We are a 26-year old business, we are an old line business, we make precision machine parts and assemblies. As you see choo-choo trains going down the road, inside the diesel engine is our parts steaming away to make the thing go.

I have not much of an education, I am a graduate of HKU, hard knocks university, magna cum laude, I have been screwed, glued and tattooed in 26 years of business.

What you people call restructuring, downsizing, smartsizing—all of those things—survival, price reduction, I call them survival in the business world.

From 1985 to 1995, we have halved our employee base and our sales have remained the same. Our sales have gone up in those years with half the employees.

In 1985, after buying out our partner, we had different general managers, I had in 1985, 1987, 1989. Then sometime in about 1989, our general manager left us and went to our competitor to start more competition against us. Not knowing what to do, I called a staff meeting, a meeting with the supervisors and key managers and sat down with them and went over my problems and what we planned to do and what we would like to do. This became like a daily affair, I would go over with them and share with them my losses, my successes and all the things that we had done in business. In fact, this evolved into doing things like telling them about what our profitability is, telling them how much expenses we spend, telling them what we do, telling them where the income is coming in, where the income is not coming in. And like Mr. Lawrence said from TRW, price reduction requests by our customers.

We are forced every year by our customers to reduce prices 8 percent. Granted, we do not give them 8 percent because it is very difficult sometimes, but we may have to go 4 percent, 3 percent, 2 percent or some innovative idea on payments to teach strategies for them.

We even got to talk to our employees and ask them to help in training. We have heard a lot about training. We have a program, as Congressman LaTourette says, we take high school kids in the Explorer program, we are registered with the Boy Scouts of America, and we teach youngsters how to manufacture parts. We actually have them build and construct an entire cannon and let them take it home with them at the end of the year. We go from September to June and the cannon is about this big. Our foreman just fired his over the 4th of July three times and said it really makes a tremendous power impact. The kids really enjoy this. We have got more youngsters waiting in line to come to work for us than most companies do. We have got two young apprentices with us this year. We have got one starting in a tech center next year because of this. We are very, very fortunate.

This open communication that we do with our employees, with our staff, the team concept, whatever you all want to call it, whatever kind of names you want to give it, TQM and all that stuff—I just call it open communications and sharing with your employees whether or not you are breaking even, whether you are profitable and what to do. When you are losing money, it is very, very easy to share with employees and staff what you are doing. When you are profitable, as we have been this last year, which has been a God-send, it is the opposite effect. The employees work extra hard to try and do things to help you.

Being in business, you know, we have to sell $1 before we can spend $1. And hopefully we are fortunate enough to spend 99 cents so we have a penny left over so we can invest it in our future activities. That is the difference between us and the government. The Federal Government spends $1.20 to $1.25 for every dollar they collect. [Laughter and applause.]

It is true, we know that. I have been told it is $1.25.

So their question is, you know, the government cannot survive within its means and business has to survive within its means, we have to spend less than what we are taking in. So that is why what I suggest is zero-based budgeting.

There is a short little section here of an article that relates to OSHA that was written by John Jenson from Precision Metal Forming Association. I would like to kind of read this to you, it really hits the nut right on the head. It says, "It is sad to realize that the regulatory juggernaut keep rolling along out of control, imposing ever greater costs for ever smaller gains. In spite of the talk of downsizing, cutting Federal employees and re-inventing government, we are actually experiencing a regulatory explosion. The rules are multiplying faster than a room full of rabbits. Little wonder Federal regulatory spending is at the highest point ever. The Occupational Safety and Health Administration, OSHA," which you have heard a lot about today, "for example got a 7-percent budget increase this year along with an increase in staff and several other regulatory agencies received considerably more. Somehow that does not seem like downsizing to me. As a matter of fact, the growing heap of Federal regulation now comes to 202 volumes numbering 101,803 pages, according to the folks that keep track of such things, and that does not take into account State regulations. The cost to our economy caused by all this regulatory activity is estimated by responsible observers to exceed $500 billion annually. That smarts."

So as I was saying, what my suggestion is, it is easy to share and it is easy to get better. All you have to do is to communicate with your employees and get your employees and people to come back to you and give you ideas, as the gentleman from LTV Steel said. Our employees are constantly giving us ideas and suggestions. Just yesterday, we saved a couple thousand dollars, our employees took off in the afternoon. Two young ladies took our pickup truck, went to the nursery center, bought about half a dozen shrubs, brought them in, had the guys from the shop come out and plant them, stayed there in the evening to water them. It cost us $700 of company time and purchasing time, and it would have cost us $3,500 to have a landscaping company do it. And this is just one

of the things that our employees come up with all the time, unknown to my knowledge, that they do these things, and then every once in awhile they say come on over and look and see what we did.

So what I say is thank you very, very much for having me here. This is truly an absolute honor to be with these fine people up here on this panel and also the Congressmen. Thank you. [Applause.]

[The prepared statement of Mr. Sustar follows:]

FREDON

July 5, 1995

CONGRESS OF THE UNITED STATES
COMMITTEE ON GOVERNMENT REFORM AND OVERSIGHT

Restructuring, downsizing, smartsizing, all these mean the same thing. Survival in the business world.

In early 1989, our Plant Manager left us to go to work for a competitor of ours. Not knowing what to do, we called a meeting of Staff, Key Managers and Supervisors in our company. Soon it became a habit to share with Staff all we were doing business wise, in the community and training.

This open communication seemed to work, and we have been doing staff reviews almost daily since then. This seems to get everyone together and on the same wavelength. We have gone from yearly losses, to break-even to profitability.

Having to sell a dollar before we spend a dollar is different then our government's system. The government collects a dollar and spends over 20% .20 cents more. We must ask why can't government survive within its means. Businesses just close when they spend more then they are taking in.

We are sure there are many businesses who have survived smartsizing. We must do it as a necessity. Government does not have to, and of course, they don't.

It is easy to share with Staff and employees when your losing money. But as you start to be profitable, it is harder. You must be consistent in whatever you do with Staff and all employees.

Constant communication with Staff and all employees at group meetings helps keep us going.

Thank you - Staff.

Thanks,

Roger Sustar

Member

P.O. Box 600 ■ 7911 Enterprise Drive ■ Mentor, Ohio 44061 ■ (216) 951-5200 ■ Fax (216) 951-5840 ■ NMA PRECISION

Questions for Roger J. Sustar

1) In your statement there is a strong emphasis on open daily communication with all staff. Could you elaborate on this open communication and tell us the positive impact it has had on your organization and your employees?

2) What is your vision of a 21st Century Government?

3) What is your position on the elimination of each of the following federal departments: Commerce, Energy, Education, and Housing and Urban Development?

FREDON CORPORATION

FREDON

CLINGER

July 24, 1995

Congressman William F. Clinger, Jr.
House of Representatives
2157 Rayburn House Office Building
Washington, DC 20515-6143

Dear Congressman Clinger:

Thank you for your note and questions sent to us July 18, 1995, copy attached. It was an honor and a pleasure, to share our thoughts with you and the committee. We will try to answer your questions as best as possible:

1. Daily communication with Staff is with key employees at Fredon. These are the people who make our company go. It includes Sales Manager, Manufacturing Foreman, Quality Supervisor, Office Manager, and Customer Service Manager, plus myself.

   By sharing daily activities with Staff, future plans, ideas and thoughts, we work together to solve many problems, hopefully before they come up, and those that do come up.

   Monthly group meetings with all employees keeps everyone abreast of what is going on. Plus telling them what we want to do now and in the future.

2. My vision of the 21st Century Government isn't too good right now. I'm afraid whatever we say or do doesn't matter. Government regulates itself, it has no competitors to keep it in line as businesses have.

3. The only federal department I feel could be closed, eliminated is HUD. I guess that reason is because we don't fully understand it? We feel it just gives away money and does not contribute to the economy. Commerce, energy, education all do things to keep business going.

   In the education department, we would like to see equipment deleted from government and state purchasing. Use all of us in business as sources for that use.

P.O. Box 600 ■ 7911 Enterprise Drive ■ Mentor, Ohio 44061 ■ (216) 951-5200 ■ Fax (216) 951-5840 ■

Member NMA PRECISION

FREDON CORPORATION

FREDON

7/24/95
Page 2

We hope this answers your questions. If we can be of further help, please feel free to visit our facility and see how we do things here. Simple things done well can make us better all the time.

Thank you for listening to us.

Sincerely,

Roger Sustar
Fredon Corporation

cc: Congressman Steven LaTourette
John Cox - NTMA

Attachment

Member

P.O. Box 600 ■ 7911 Enterprise Drive ■ Mentor, Ohio 44061 ■ (216) 951-5200 ■ Fax (216) 951-5840 ■ NTMA PRECISION

Mr. CLINGER. I want to thank this panel very much for their very valuable testimony. And I would like to open for questions. Mr. Sanford.

Mr. SANFORD. I have got a question, since we clearly have a wealth of business experience on this panel and I myself 6 months ago was on the real world side, this is my first time in elected office. But I am struggling with the idea of incentives, because as I heard what you all have done in the steel business or steel related business in terms of downsizing as much as 50 percent in some cases, I can see very clearly the set of incentives in place—survival. If you do not make those cuts, the company does not survive. And what I struggle with from an incentive standpoint is that I myself and many of my colleagues came to Congress because we believe this Nation's survival depends on us getting to a balanced budget very soon and not running these structural $200–$250 billion deficits. [Applause.]

The problem is that, as always in any large family, there is disagreement on a point. And there is disagreement on that point. Not everybody buys into the idea that we have to get to a balanced budget by the year 2002.

That being the case, what it then creates is a questionable set of incentives because if you do not buy into that end goal, then survival for many folks in the political sphere means handing out goodies. And as long as you hand out the goodies, you keep running deficits.

What would you do to change the set of incentives for the elected person in office, so that their survival is clearly linked to the Nation's overall survival?

Mr. MOORE. I think you have asked a very complex question that I am not sure the business community can really opine well on. The fundamental thing, Congressman, is that I think so much of it comes down to this: in business our job in management is to add value to our shareholders' funds. And if you will, to do no harm. I think at the end of the day, it is respectfully your job to try to add value to the taxpayers' funds. I think there is an analogy between the taxpayer and the shareholder. The question of incentive is a very complex one. Certainly we all recognize that sometimes by doing the right thing you may work yourself out of a job, so to speak. I think business often faces that type of a problem when there are companies that downsize, they sometimes work themselves out of a job. I think that is the best answer that I might give you. Frank, you are part of the steel industry.

Mr. ALTIMORE. Well, I think an incentive depends on what it is your mission is, what you are trying to accomplish, and then what sort of measurements can you put in place to track are you performing against the things you said you had to do to reach the mission or the goal that you set for yourself in the first place. Some method of trying to keep that score card, because you have to stand election again every 2 years, should provide sufficient incentive. I would think that might be something you would want to think about. How do you track the performance of a Congressman, what are the measures, what are the goals?

Mr. LAWRENCE. I think it is also a sort of complex question. I think that the last couple of national elections have elevated the

focus and the debate in a way that, at least for elected representatives you are going to have a better opportunity to measure progress against a set of standards that I think are beginning to evolve in terms of the government functioning more efficiently. And so the real—I think the populous has to cause that to be generated and I think the representatives have a stake in that in terms of talking very clearly and setting out, you know, the objectives. Quite frankly, I think there is an advantage to elected representatives who take the approach of being maybe a little more clear in terms of what they are trying to accomplish and then come back with a score card at the end of the 2 years or whatever the term is, that they can be graded against. That really has not been the case in the past, and absent that type of score card and some clear measures, it is hard to come up with an evaluation.

Mr. CLINGER. The gentleman's time has expired.

Mr. Horn.

Mr. HORN. Thank you, Mr. Chairman.

While we have all this talent from small to large business here, I would like to ask you a question that my particular subcommittee has been grappling with. In the measurement of government programs, obviously we want to be results oriented, we want to be customer satisfied. A lot of you have interactions with the government. I would be curious to have maybe your best shot, if we try to measure nothing else, what should we measure. What I have seen in both business and government is that, too often, they count things that are countable and often those do not have anything to do with whether you are achieving the mission or not. The goal and the results do. And it is sometimes very difficult to measure how far along you are. What is your best advice to us as a major critical factor that most organizations have and how we measure it and how have you solved the problem?

Mr. Lawrence, you want to take a stab at that?

Mr. LAWRENCE. Well, again, I think that you have to start with what I said before, a very specific and identifiable set of objectives, goals, whatever you want to call it. I am not certain that a lot of government programs have those on the front end. So that to begin to do the evaluation process becomes very difficult because you are on somewhat of a slippery slope trying to evaluate it against a whole maybe different series of criteria. So I think the first step—and this is what we try and do within the company—is to be very, very clear on what the goal and the objective is that we are trying to accomplish, and then be sure that we do have a mechanism for measuring how well we did, and some buy-in on the part of the people that are responsible for implementing it, in terms of what those measures ought to be.

So it is the combination, I think of those two steps that end up being critical.

Mr. HORN. I think you are right, but let me give you one where I am sure you have had a lot of experience—government procurement and acquisition—this committee has jurisdiction over that. The kinds of questions a lot of people would ask is just how many contracts are being processed, or something like that, or did they finish on time. That is not necessarily the question. What would you suggest the question is?

Mr. LAWRENCE. Well, I think if you are talking about the procurement area, you need to take a look at the entire process.

Mr. HORN. Right.

Mr. LAWRENCE. So I think a mistake that can be made is that if government just looks at one piece or one segment of the process, you may optimize that piece of it, but you may not understand what is happening to the other 70 or 80 percent. In the case of procurement, I think the problem has been that while each of the steps within the government's procurement cycle may make sense internally, the fallout in terms of the waste and the inefficiency that that may create for what private industry has to do to respond to it is incredible. So the fix is to look at the entire procurement cycle as an entire set of transactions and begin to redesign the cycle as a system as opposed to pieces of it.

Mr. HORN. Anybody else want to comment on this?

Mr. Sustar.

Mr. SUSTAR. Yes, I would like to comment on the procurement side of it. We used to do government procurement work. We would not have any of it now. Your $400 hammer should actually cost $4,000, it is the paperwork, the gobbledygook, all the stuff that you make us do. Right now I can tell you we are doing parts for a second-tier supplier to NASA which goes on to Rockwell. One little washer requires a page, as much as Karen has written down here, on everything to document it. I mean there was such a thing one time in this world as form, fit and function. We have bureaucraticized ourselves—is that a good word?

Mr. HORN. Right.

Mr. SUSTAR. And what the problem is with the government, we do not want you coming in by us because the first thing you do when you come in is you have an audit and you say our air conditioner is 73 degrees in here, it is supposed to be 72—whoopee-doopee. I mean, those are some of the ludicrous things that you guys end up doing. And that is why—[Laughter.]

It is not funny, it really is not. That is why a simple part on a space shuttle that is worth 50 cents costs $50. And when you guys can understand that, you can put something up in space, instead of $10 million, you can put it up for a million and a half.

Mr. HORN. Yes. You will be glad to know we have created a Corrections Day in the House of Representatives and any nutty regulation that you might put your finger on, like 74 versus 73, unless it is a special scientific laboratory, send it to your friendly local Congressman. He or she will be glad to use it at Corrections Day.

Mr. CLINGER. The gentleman's time has expired.

Mr. McIntosh.

Mr. MCINTOSH. Thank you, Mr. Chairman. I would just like to ask each of the panel members to write down the names of four agencies, or put them in your mind, and these four are chosen because they have been discussed as possible agencies to eliminate in the restructuring, and I will give them to you and I would just like you to say yes or no to each of the four, what your opinion is: It is the Energy Department, the Education Department, the Department of Housing and Urban Development or HUD, and the Commerce Department. You do not have to back it up with reasons, you can if you want. But I would just like your opinions on if we should

eliminate all of those, some of them, and which ones. I do not care which way we go. Ladies first, OK.

Ms. KLEINHENZ. I am not trying to dodge your bullet, but I have to admit that on the basis of how I spend my time each day at KeyCorp, I do not have a basis for, on behalf of the company, responding in that way. I do not have the experience to do so.

Mr. MCINTOSH. If you were just going to give us advice on your own. Would you be biased toward abolishing them all or keeping them all?

Ms. KLEINHENZ. I would be biased toward adjusting them all in ways that would produce short term benefits as opposed to entirely wiping one out or retaining one at the total expense of the other, because I think they all have benefits and I think they all have challenges, and I think they need to be addressed individually.

Mr. MCINTOSH. Thank you. [Applause.]

Mr. SUSTAR. I want to help you with the Education Department. What I would like to see in education, and especially in the training end, is you know, you guys send millions and billions of dollars to the States, we have the school to work programs, we have got the jobs, we have got all this crazy stuff. Then you go ahead and you spend money on new equipment, you bring it into the States, by the time you guys learn how to use it, it is obsolete. I would like to see you send all the kids in school to our facilities so that they could learn how to do things. Therefore, the government has absolutely no expense for any more equipment, you can bring it in to us, we are going to teach them the hands-on things that are really going on. And then instead of us paying like $162,000 in taxes this year that we have got to pay, give us a 50 percent break or something.

Mr. MCINTOSH. Give you a tax credit or tax deduction.

Mr. SUSTAR. Yes, but do not forget now, you are saving kazillions of dollars.

Mr. MCINTOSH. Right.

Mr. SUSTAR. That is the big thing. [Applause.]

Mr. MCINTOSH. Good.

Mr. MOORE. Congressman, in my prepared remarks, I emphasized avoiding hasty categorical abolishment. I think it is dangerous to just say "eliminate everything." I think it should be targeted, I think downsizing is very important. I think government should take a page from the book of industry that has greatly decentralized to as local a level as possible, and put the decisionmaking out with the people who are closest to the situation. I think you still need broad policy direction and I would like to relate that back a little bit to the question on measurement. So much of the emphasis on measurement leads to very detailed government rules, regulations, procedures and policies, so everything can be measured ad infinitum. I think we need a much greater emphasis on broad directional statements and a more trusting environment that allows those policies to be implemented at the lower level.

Mr. MCINTOSH. But Mr. Moore, if we followed your advice, or if you followed your advice in your company, you would still own all of the different product lines, you would just do them differently. And you had to choose between some of the product lines and say we are not going to be in that business.

Mr. MOORE. No, I am not necessarily advocating stay as you are and just do it all a little better and a little more decentralized. I think you do need to target, just as we are still in the iron ore business, but we do not run every iron ore mine that we used to.

I would particularly like to say in regard to the Department of Commerce, Commerce provides some very valuable functions in the area of fair trade administration. It is very important to employment in this country, and employment is the engine that makes the economy, and ultimately the government, go.

Mr. MCINTOSH. Thank you, I appreciate it.

Mr. LAWRENCE. I would agree, to a large extent, with Mr. Moore. I think it is a mistake, it polarizes the discussion to talk about wholesale elimination of some of these departments. What we have done in our business is that we follow an approach where we say the structure of what we are going to do follows our strategy, the strategy that we are trying to implement. I think what needs to be done in the case of each of the four that you have mentioned is that I am not against downsizing and a real hard focus on what their mission is, and then let us begin to figure out what the highest priorities within those mission areas are and then how best to deliver those. Whether it is as a part of the same department or not, to me is almost irrelevant. It is a question of whether the activities they are engaged in are central to the mission, and also whether or not we can afford them. And I think that has got to be entered into the equation.

So my approach would be to begin to look very critically at what the central mission of these various departments is, how it is carrying that mission out, through what agencies or subfunctions, and then whether or not it is necessary or nice to have, or whether or not we are able to outsource them, et cetera. But I think you have got to go through that process. Otherwise the debate becomes—like we had in our company about centralization versus decentralization.

Mr. SCHIFF [presiding]. Pardon my interruption. I have to ask if we can—I did not want to interrupt because it was a question to the full panel, but I have to ask if we can begin to wind up so I can call on the next panel. If there is something further.

Mr. LAWRENCE. No, no, I am just saying I think that it polarizes the debate too much to be meaningful, to talk about it in terms of elimination versus non-elimination.

Mr. SCHIFF. Mr. Altimore, did you want to respond briefly?

Mr. ALTIMORE. The only comment I would make is I would agree with my colleagues on the question of wholesale elimination of departments, but I think one of the areas you need to look at very closely is the process that you set up when you create a department. And I will use one like the EPA. Then you create a separate group, not the Congress, that is responsible for the implementation of the law you passed. So you end up with a regulatory agency which then subdivides itself and separates out powers. You have an authority in one group for enforcement, an authority in a different group for writing the regulations, and they do not talk to each other. That creates all sorts of inefficiencies and complexities and costs to those of us who have to comply. So look at the process too, would be my comment.

Mr. McINTOSH. So let me make sure I understand though, all of you would say do not eliminate any of those departments.

[No response.]

Mr. SCHIFF. If the panel is finished with questions, the gentleman's time has expired.

Mrs. Collins.

Mrs. COLLINS. I am sorry Mr. Sustar, I did not hear all of your commentary, but did I understand you to say that it would be a good idea, rather than having the money for job training sent directly to some other group, to have the students come directly to the companies where they can work with the machinery—almost junior apprentices, and learn how to use various kinds of technologies that are out there?

Mr. SUSTAR. Absolutely. And I wish you could help us with the laws with the youngsters and the age group, because the attorneys get involved with this and then we really get into trouble.

Mrs. COLLINS. I want to ask you some more questions about that.

Mr. SUSTAR. Please.

Mrs. COLLINS. And to remind you of the fact, that back in the 1970's and 1980's, we had the CETA program—I have forgotten what CETA stands for now, but I know it was C–E–T–A—Comprehensive Employment & Training Act. I chaired the subcommittee on manpower and housing, and one of the things I found out, is that to the extent of some things that are being done—I remember in particularly a case at General Motors in Detroit. I went out there they had students being trained to work in the automobile industry, probably in some of the factories at General Motors. In some extent, some of the training was excellent in that it spoke very highly and trained them about the right work attitude, coming to work on time, coming prepared to work, coming prepared to do the job, et cetera.

There was one thing that bothered me about this program. However, toward the end of the program was that these students went there with great expectations of being able to get jobs, there was hope, they had been led to believe that as soon as this training was over, they were going to find jobs in the automobile industry, perhaps even at General Motors. Those jobs really were not there, so there was a great deal of disappointment, and they felt that they had no place to go. The training was good, the money was good, while they were being trained, but nothing came out of it so that they are not now employed in that particular industry doing what they thought they were going to be able to do—technology changes, so forth and so on.

So, I wonder how you avoid that kind of thing, where you raise hope high and then disillusion for those who go through the program?

Mr. SUSTAR. This is the problem we had back in the late 1970's, early 1980's, General Electric Towmotor used to be a company here, Republic Steel, LTV, all of them did that and they could not take the kids.

Mrs. COLLINS. How do you avoid that?

Mr. SUSTAR. I do not know how to avoid that. You know, what I am saying is not to—what we have to do is you cannot guarantee anybody a job. My theory is I am here to make a living, not to earn

a living. If you are in this world to earn a living, you are never going to make a living. And that is one thing you have to—that is why I want the kids to come in to our people so our people can talk to them the way it really is on the floor, and tell them what is really going on. Because sitting here, me, today with you and being the owner of our company, I cannot talk to the youngsters as our people can. Our people can tell the stuff that these people are going through every day, it is a big difference.

Mrs. COLLINS. You wanted me to yield to you? I would be glad to yield.

Mr. HORN. I would just like to note, that I think your question is an excellent one and one successful example I saw was Rockwell's Space Division, which is based in Downey, CA, that built the Apollo. In the 1970's when there was an expansion of the work force, then you could provide the opportunities and a wonderful person named Jess Arnold made sure all the local high schools around made arrangements for these young people to come over during their junior/senior year, and work on the latest type of equipment with skilled craftsmen—all done by Rockwell after hours. The schools are always two or three generations behind in most of this highly technical equipment, if they can even get any of it. So you need an expanding economy and there is no question that is the best type of learning by doing, as the philosopher, Mr. Dewey said, John Dewey, in education. And there have been success stories.

But if you have got a declining economy and false expectations, we are all in trouble.

Mrs. COLLINS. I thank the gentleman. I yield back the balance of my time, Mr. Chairman.

Mr. SCHIFF. All right, I would like to thank this panel very, very much for your contribution. I guess I should tell you, just to conclude here, that I guess I am one of those people who has been called a career politician. I was a district attorney for 8 years in Albuquerque, NM, have been in the House of Representatives the last 6½ years. My father when living was in small business, he managed a shoe store, always considered me slightly above being on welfare, but not a whole heck of a lot if you want to know the truth.

So thank you very, very much for your contributions to this panel. [Applause.]

I would like to ask panel four to come up, after panel three has cleared here.

It is a pleasure to have Michael Horowitz. Mr. Horowitz is a senior fellow at the Hudson Institute and interspersed with his many years of private law practice, he has served in government service in a number of ways, including 4 years as General Counsel for the Office of Management and Budget.

I would like to also welcome Professor Bill Marshall. Professor Marshall is professor of law at Case Western Reserve University and a scholar in many areas including federalism, which falls within the jurisdiction of this committee.

I would like to welcome you both and presumably you have watched the proceedings here now, so Mr. Horowitz, I will invite you to go first, please.

STATEMENTS OF MICHAEL HOROWITZ, SENIOR FELLOW, THE HUDSON INSTITUTE AND FORMER GENERAL COUNSEL OF THE OFFICE OF MANAGEMENT AND BUDGET; AND PROFESSOR WILLIAM MARSHALL, CASE WESTERN RESERVE UNIVERSITY SCHOOL OF LAW

Mr. HOROWITZ. Thank you, Mr. Chairman. I have got a very hard job at the Hudson Institute in many ways, I followed Dave McIntosh after he got kicked sideways, let us say. When we are doing good work, we say that.

I have spent a great deal of time on issues of government management, issues of fraud, waste and abuse, re-inventing government, putting the "M" back in OMB, all the kinds of calls and slogans that go to the heart of what this committee's jurisdiction is about, or surely used to be about. And I can say for myself that I was as mean as any junkyard dog whenever I confronted fraud, mismanagement, waste and abuse. And yet, the real purpose of my testimony is to offer a contrarian view of what used to be the work of this committee.

My own experience is that the fraud, waste and abuse issue was the refuge, the cover that the political system used to commit larger fraud, waste and abuse within the government, and most tragically, on the American people. There is a subliminal message every time we talk about running the government as a business. Every time we colloquy about—and you did it, Congressman, on more efficient car pools for the Federal Government—the real message we send out to the American people is if only we cut back on the waste and the inefficiency in government, we could have soft landings as we downsize the government. We could have painless retrenchment as we balance the budget.

Pat Moynihan said of the welfare program that it was used by the administration—what did he call it—"boob bait for the bubbas." That is how cynical politicians have used the fraud, waste and abuse issue.

And as I will try to conclude, I think the greatest role this committee has, ironically, is educating the American people that the fraud, waste, abuse management issue is important but not critical, that it stands in the way of what the government ought to be doing and what the Federal Government particularly ought to be doing—looking at those functions that only the Federal Government can do and that the Federal Government must do and courageously shedding the others.

The greatest single enemy, opponent, of fraud, waste and abuse in the government of my lifetime is the budget resolution that this House passed. Before that, it was the A to Z resolution the year before, and some years before that, the high water mark budget resolution that was passed by the Senate but not the House, eliminating whole government agencies.

I say that the leadership role of this committee is making sure that there is no opportunism any more in fraud, waste and abuse issues. And forcing, educating American people to understand that hard choices have to be made and that prices have to be paid, as always, when hard choices are made.

Let me give you some examples of how conservatives and liberals have played the same game. Troubled about welfare spending, but

do not want to confront the tough structural issues about dependency, about the tradeoffs involved when we move against rampant illegitimacy, that we may have to create some pain and suffering on the part of innocent children who are born? These are tough issues. No problem—just talk about welfare chiselers, talk about people who buy vodka with food stamps. You pick up all the anti-welfare political support and you never have to tackle any of the hard issues. And for years, Republicans and conservatives played that issue. It is a great mark of the 104th Congress that you are not talking about fraud, waste and abuse and welfare chiseling when you are talking about welfare reform—you are getting to the real issues.

Similarly, on my watch, somebody did not want to cope with the issue of Soviet expansionism, thought that we should not have big military budgets, but did not want to have to confront the real hard questions of what the Reagan administration was looking to do and what the Soviet Union was doing. No problem. Talk about $700 hammers and expensive toilet seats—fraud, waste and abuse. Why we are cutting the defense budget because they are wasting so much money and there are all these rapacious contractors out there. That is the way the issue was used.

And if I can give the most current example, to give you some sense of how fraud, waste and abuse issues can be cynically used as smoke and mirrors deception, there are a number of people who have said that if only President Clinton had gone on television more with goggles and smashed a few more ashtrays, he would have had enough management credibility to have sold his Rube Goldberg effort to pick up 15 percent of the American gross national product in his health care scheme. If only he had been politically shrewder in showing what a good manager he was, his health care program could have been sold.

The Civil War story—read the Civil War. One side of that story is that millionaires were created by selling rotten meat and winded horses to the military, and opponents of the Civil War, of Lincoln, used that to a fare-thee-well. Lincoln understood that this was part of the price of government being in business, that there was a larger issue here of saving the Union and ending slavery. That is the half empty side of the glass. The half full side of the glass is we had a lot of fraud, waste and abuse but from a standstill start and a rural economy, we created a mighty industrial engine that defeated the Confederacy and made America a great world power which we still continue to be—with a lot of fraud, waste and abuse in the process.

I am not for it, as I have said, but it has got to be put in perspective. And this committee has been one of the greatest culprits on that issue. When I was at OMB, problems of management? No problem. Members of this committee would get up and say well let us pass a bill that elevates the Associate Director for Management of OMB and makes him a Deputy Director. Let us make sure that the Assistant Secretary for Management has a direct reporting responsibility to the Secretary. And they went home and got political credit. And it solved absolutely nothing.

Now two other points, if I may.

Mr. SCHIFF. Briefly, if you would.

Mr. HOROWITZ. Do not mistake the Federal Government with State and local governments. In the case of State and local governments, their business is providing services—police services, sanitation services, the rubber meets the road in those kinds of things. You are in Congress, and the President is necessarily an absentee boss on management issues of that kind. And when the boss ain't there because the boss is worried about economy, the state of the economy, international relations, the function of government, it is not a management possibility, it is not on the President's agenda, it is not on your agenda on anything but a hit and run basis. And we ought to recognize that, which is again another reason for saying that the real management issue is to decide what the Federal Government has to do, and only the Federal Government can do at cutting out all the rest that gets done.

The final point is that we have government programs in large part precisely because we want inefficiency, it is hard-wired in the system. We do not have an SBA loan program or a Farmers Home loan program because the government can allocate credit better than the private sector. We want it because we want to have subsidies to groups. We also want it because Uncle Sam is going to be a softer collector on defaulters than banks will be. And that is wired into the program. Now we may need it, but let us not mistake the political character of it. And you are driven to that as Members of Congress. Whatever a Congressman can do to resist pork to his district—and the 104th Congress with its freshman class, is a wonder for an old-timer in Washington, doing it less than I have ever seen.

The fact of the matter is every one of you freshmen will find that if there is some effort to have error rate enforcement for food stamp fraud in your State, you are going to be out there turning the government upside down to make sure that your State does not take a 5-percent chop on the AFDC allocation.

The President of the United States has spent weeks talking about closing down one inefficient base, for goodness sake, and that is built, hard-wired into the political system.

So I say again, if we in the Reagan administration had had fewer Inspectors General and been less dogged on some of the management stuff, I think we could have cut down the government more. Because we were sold the real message of the hard choices that had to be made. And the role of this committee is not to have better management. The larger role is to put the issue in perspective so that the larger work this Congress is doing, as the budget resolution is courageously doing, can go forward.

Thank you very much. [Applause.]

[The prepared statement of Mr. Horowitz follows:]

TESTIMONY OF MICHAEL HOROWITZ
SENIOR FELLOW, HUDSON INSTITUTE
BEFORE THE HOUSE COMMITTEE ON
GOVERNMENT REFORM AND OVERSIGHT
JULY 14, 1995

Mr. Chairman and Members of the Committee: I am grateful for the opportunity to testify on a subject I believe to be of surpassing importance, not merely to the Committee's direct jurisdictional responsibilities, but to the American system of governance itself.

Government Fraud Waste and Abuse is of Course Bad and Wrong

Having served General Counsel of the Office of Management and Budget during the first five years of the Reagan Administration, I have had direct and intensive experience with issues of federalism, government reorganization and Executive Branch management. I have worked with the Congress and General Accounting Office on a number of such issues and was deeply involved with the procurement reforms, management initiatives and expansions of Inspector General offices which took place during the Reagan Administration. My record with regard to corrupt, poorly organized and badly mismanaged federal agencies and operations is one of implacable hostility -- and I know that I was (and am) as mean a junkyard dog as anyone when I confront government fraud, waste and abuse.

And yet!

Fraud and Abuse is Committed in the Name of Fraud-Waste-Abuse Management Issues

The strongest conviction I now have about the matters which are the subject of today's hearings is that they have largely served as *refuge and cover* for those who favor big government -- that they have been a critical political means by which some Members of Congress have deliberately

evaded dealing with what should have been their central responsibility of defining the role, scope and function of the federal government.

Put in other, even more troublesome terms, the set of issues which the Committee examines today has been a major means by which many Americans have been misled to believe what is palpably untrue: that greater efficiencies in the management of the federal government and fierce attacks on the fraud and inefficiency of federal agencies and officials can allow for "painless" retrenchment of big government, can seriously help balance the budget. Pat Moynihan's accusation that the Clinton Administration used the welfare reform issue as "boob bait for the bubbas" precisely characterizes the often-cynical way in which fraud-waste-abuse-management issues have frequently been employed inside the Beltway.

Troubled about welfare policies while being unwilling to address underlying issues of underclass formation, generational dependency, illegitimacy and increasing the pain of some current welfare recipients? No problem. All that needs to be done to gain favor with voters upset with the welfare system without running the political risks involved in seeking real change is to concentrate on welfare chiselers, food stamp abuse, Medicaid fraud. This was the strategy followed by many conservatives for many years, and it is among the greatest achievements of the 104th Congress -- and particularly its House majority -- that serious efforts are being made to address welfare's *structural* problems and to identify the inherent limitations of the federal government which place many welfare management issues beyond the reach of federal management reforms.

Disagree with national security and defense policies premised on the need to increase the military credibility of the United States, but are unwilling to seriously debate such issues as the nature of America's obligations in an increasingly fragmented world or such happily former issues as the nature and risks posed by Soviet expansionism and imperialism? Again, no problem. Hold hearings about $700 hammers and expensive coffee pots, and you just might be able to cut defense budgets without bearing the political consequences of such cuts. ("If only the Pentagon had bought toilet seats at Home Depot rather than giving away millions of dollars to rapacious defense contractors, there would have been enough money left over to have insured full defense readiness.")

Want to create a Washington-based, Rube Goldberg system of boards, agencies and bureaucracies to manage and control an American health care system which directly consumes 15 percent of our total gross national product? Here's one way to help bring this about. Go on the David Letterman show with a set of factory goggles and smash a few ashtrays purchased by GSA under the government's absurd acquisition rules. That many fault the President's health care reform failure to his not having more fully identified the Administration with the work of the Vice President's Reinventing Government Task Force powerfully testifies to the capacity of the issues addressed at today's hearings to achieve smoke and mirrors deception.

Civil War Lessons

Lincoln had a better vision, and readers of Civil War history know how critical that vision was to the preservation of the Union and the abolition of slavery. In converting an import-dependent, essentially rural economy into a world-class power capable of militarily overwhelming the Confederacy, Lincoln constantly confronted the need to deal with contractors who often, at exorbitant cost, provisioned the Army with thread-bare blankets, winded horses and rotten food. These case-stories of waste and fraud were cited by opponents of the war in their efforts to undermine Lincoln's basic policies. Among Lincoln's greatest accomplishments was his capacity to achieve proper *balance* on Civil War fraud-waste-management issues: to patiently address the latter problem while seeing it as an inevitable byproduct of the system -- doing so while keeping the country's attention on the need, above all, to win the war. The half empty glass element of the Civil War story was that it created many politically-wired, crooked millionaire contractors. Happily, however, Lincoln was able to ensure the telling of the more-than half *full* glass story of the Civil War: that from a stand-still start, the American economy was in less than three years transformed into a mighty industrial engine which both saved the Union and made America the world-class power we continue today to be.

The Civil War story suggests that while many urgent government missions will, by their inescapable urgency, inevitably generate fraud and waste, the ultimate job of political leaders is to ensure that such missions are achieved. It also makes clear that the real job of those who make federal

policy is to more carefully prioritize government missions and to rigorously limit the federal government only to those missions and activities which must be performed and cannot be performed elsewhere.

Federalism

The latter point leads to a discussion of the federalism issue which, in my view, the Committee has wisely placed on the table for today's hearings.

May I begin with an anecdote which I believe to be instructive? While at OMB, I was tasked with dealing with the often unfair manner in which many federal grants were awarded and terminated. The "solution" proposed was that we establish, for those unfairly treated by the grant process, review and appeals boards similar to those already available to persons contesting government contract decisions. Agency working groups and the United States Administrative Conference had come up with proposals which, while allegedly protecting the management discretion of grant-making agencies, ingeniously sought to give hearings and appeals rights to disgruntled parties. My opposition to those proposals was based on the fact that HHS alone was at that time engaged in making as many 250,000 individual grant decisions per year -- a fact which literally ensured that its decisions would seldom if ever be made (much less scrutinized or even known) by politically accountable officials. My proposed response to the grant-making/grant administration morass of the federal government was to press more vigorously for block grant systems, under which decisions could at least be subject to the review of senior government officials and were far less likely to be buried within bureaucracies. (This approach makes even more sense today than it did during the Reagan Administration, when many Governors preferred to serve as middle managers for federal agencies because they preferred to blame the federal government for program failings and were concerned that they would be politically accountable for program failures if they were given policy discretion to make real decisions.)

Localism

Persons taken with Reinventing Government rhetoric also often confuse the many management success stories achieved by local and

municipal governments with what can or should be done by the federal government. In my opinion this confusion -- and the significant nontransferrability of municipal management techniques to federal government programs -- results from two factors.

First, delivering services is, generally speaking, the central and inescapable responsibility of municipal governments. Police, sanitation, school, fire, library and emergency services, among others, have been historic responsibilities of counties and cities -- *and while even here voucher and privatization systems may offer more efficient service delivery models*, voters look to their local governments for such basic services. Alternatively, they chiefly look to the federal government -- as they must -- for more basic, *non-service* functions: the stability of the economy, the conduct of foreign and national security policy, the allocation of responsibilities within our governance systems. To be sure, the federal government must properly manage such service delivering institutions as the defense establishment, but even here the success-at-all-costs imperatives associated with winning and fighting wars are very different from the efficiency-above-all imperatives of less vital services.

Next, and relatedly, local officials such as mayors and county executives (and even Governors) are expected to spend the bulk of their time in improving and supervising the efficient delivery of services. On the other hand, the responsibilities of the President, Members of Congress and other senior federal government officials inevitably permit them to spend but modest amounts of time on such matters. Services performed at the federal level are thus invariably performed with the boss preoccupied with other matters -- a fact which further emphasizes the priority need to limit the federal government to essential functions rather than to be preoccupied with seeking to enhance the efficiencies of the services it provides.

Perverse Incentive Structures

By their very nature, government programs are often hard-wired designed *not* to be efficient -- with their very existence based on the felt need for "soft" systems. Thus, the very reason we have SBA, Farmers Home and Student loan programs is because of the desire to subsidize and protect allegedly deserving constituencies, not because anyone believes that government can more efficiently determine credit risks. (We also have the

programs because it is expected that Uncle Sam will be a less demanding creditor when faced with loan defaults.) Likewise, layoffs of thousands of employees by private sector employers can occur almost without general public notice, while RIFs of even a handful of federal employees generally become major *political* events. (The President's involvement in what, on grounds of efficiency, should have been the easy question of closing a clearly redundant California military base is an extreme and sad but highly revealing example of this phenomenon.) Here again, therefor, the root question for Congress and any Administration is whether non-market subsidies are truly needed and whether, in light of the easily politicized character of federal activities, the activities are truly necesssary.

The nature of Congress also militates against efficient federal management practice. The need to service and reward home districts (and the special powers of Committee chairmen to take care of theirs') creates a generally inefficient relation of federal tasks to their assigned locations. More significantly, the demands placed on Members helps ensure both management inflexibility and noneforcement of tough management standards. This is because while Members may be able to resist pressures (if barely) to obtain the largest possible pork barrel allocations for their districts, few can resist turning the federal government upside down on a no-holds-barred basis in order to stop an *existing* facility from being terminated or an *existing* flow of funds from being terminated. It's no accident that "tough" statutory error rate standards in AFDC and Food Stamps programs (passed with great fanfare by tough-on-fraud Members) have never been seriously enforced against lax and offending states.

The incentive structures of government also helps ensure that its management "solutions" will often be perverse. Thus, the capacity of Congress and senior political executives to episodically reach down and land upon the unlucky few government managers whose activities come to the attention of such officials ensures that federal officials involved with service delivery functions will make themselves as bureaucratic, as anonymous, as *risk-averse* as they can possibly be. Federal procurement regulations -- paradigm examples of government bureaucracy and inefficiency -- do not exist by accident but rather are perfect reflections of operating government incentives. Endless pages of mind-numbing procurement regulations are of great value to players in systems whose politics provide *little tolerance* for the seeming acts of fraud, waste and abuse which are the inevitable by-

products of aggressive, risk-taking conduct. ("I didn't have anything to do with that decision, Congressman. The regulations made me do it.")

False "Solutions" are Highly Likely

The absence of such objective success markers for government as year-end profit and loss statements further skews government performance incentives, and further reduces government's capacity to provide services on an efficient basis. That fact, combined with the fact that the primary duties of the federal government and its senior players ensure that they cannot provide sustained attention to management issues, inevitably makes federal management issues more subject to cosmetic than to real solutions. A good example of this was my experience at OMB with its management division matters -- where "solutions" to management problems often took the form of creating and at times legislating layers and regiments of "management" officials. This approach both showered political credit on Members of Congress who seemed to be sternly insisting that "government be run like a business," while it at the same time provided more turf and greater resources for "management" apparatchiks and bureaucracies. Elevating the OMB Associate Director for Management to a Deputy Director ("putting the 'M' in OMB," as it was called), and giving Assistant Secretaries for Management direct reporting responsibility to Cabinet Secretaries -- "solutions" which came in part from this very Committee -- only emphasized why government at the federal level was a different animal than state and local governments and a different species than private sector institutions. (A related point is the ironic fact that businessmen often turn out to be the worst managers of government agencies.)

One Approach Can Work

Of the various reform approaches to federal management, the one which I have seen work best (when the political system has given it a fair chance to work) involves the introduction of *competition* to the federal workplace. In essence, this approach ignores efforts to *internally* reform government agencies and practices, and substitutes for it the bottom-line *structural* reform of requiring federal employees to fairly compete for their jobs and work. Thus, such reforms as ending the Postal Service monopoly,

vouchering the recipients of government service and putting real teeth into the still-moribund and unfairly stacked A-76 program will do more to ensure federal agency efficiency than anything else I know of. In order for these reforms to occur, Congress will of course have to deal with entrenched unions and now-unHatched federal employees, but if it is serious about reform of federal agency practices here is an approach worth fighting for.

The Great Challenge Faced by This Committee

The easy political credit available to Members of Congress who "reinvent government," "make it work like a business," and lock the barn after the horse is stolen with stern condemnations of hapless, inefficient federal bureaucrats pose particular challenges and responsibilities to the Members of this Committee. This challenge is made all the harder because there is of course no political constituency for fraud, waste or abuse, because inefficiency and fraud and waste *is* bad and should always be reduced to the extent possible.

In my judgment, this Committee's greatest potential contribution lies in its capacity to define the real challenge of Congress as deciding what the federal government should do, not how it should do it -- in insisting on efficient performance of federal duties *but only after* insisting on full *and resolved* debate over what the federal government's bare essentials should consist of. (The fact that the Committee is no longer named the Government Operations Committee may be an important symbolic step in this direction.) In short, real leadership on the part of this Committee may most consist of barring the door to the political opportunism which sends the false message to American voters that better government management techniques can permit painless solutions to deficit problems or can otherwise be a central (rather than merely important) tool by which the federal government deals with the issues before it.

I am deeply proud of my service during the Reagan Administration, and believe that its domestic as well as foreign policy triumphs were of historic character. Yet in retrospect, I believe that we could and should have done a better job in reducing the size of the domestic budget, and would have done so had we relied less on our politically popular commitment to larger Inspector General staffs and management reforms. In a sense, our very

success with those initiatives sent a subliminal message that an ever-larger role for the federal government was possible. They detracted from President Reagan's larger message that a massive federal government was more easily captured by special interests, that it unduly robbed Americans and their local communities of resources and discretion and that it made it more difficult for the federal government to properly perform the functions it was required to perform.

In this regard, the singularly greatest management solution that I have witnessed in the past twenty years of observing and participating in Washington public policy matters is the Budget Resolution recently adopted by the House. That resolution reflected the courageous assumption by the 104th Congress of its real duties and responsibilities, and it courageously initiated the long-needed process of achieving real reductions in the size and scope of the federal government. Ironically, therefor, much of the work of this Committee -- and its greatest potential contribution to the revolution sought by the 104th Congress -- may lie in helping to create a proper perspective and realistically *reduced* expectations about fraud-waste-abuse-horror and success stories. It will take special courage for this Committee to resist creating yet greater numbers of federal government "managers," and to offer genuine skepticism about the federal government's capacity to adopt private sector management techniques. Government isn't a business and can't and won't in the end be run as a business -- which is precisely why this Committee can best lead if it makes clear to the American people that the federal government should be restricted to those jobs which it must and no one else can perform.

I again thank the Committee for the opportunity it has provided me to speak on the critical issue it is considering today.

RESPONSE TO QUESTIONS FOR MICHAEL J. HOROWITZ

(1) What should the federal government look like in the next century?

The fereral government of the Twenty-First Century will need to have a strict sense of operating and spending priorities -- and will need as well to avoid using unfunded mandates or excessive regulation to impose costs or hidden taxes on other government entities. The central responsibilities of the federal government which involve large-scale spending should be providing safety-net income security to people unable to work and providing for the common defense. With regard to working Americans and the business community, the bargain struck by the federal government ought be as follows: it will ensure a stable, non-inflationary economy and in exchange will offer few if any middle class or business subsidies.

(2) How can we prevent government from growing again, once we have reduced its size and scope?

Decisions which reduce the size and scope of the federal government can best be made lasting if they are arrived at through honest, open, intellectually coherent, full scale and rigorous debate.

(3) What criteria should drive whether or not the federal government should continue in the business of providing a given activity? Are there limits to what the federal government can - and should - do? And can we ever reach consensus on that question?

In engaging in safety net activities on behalf of Americans unable to work, the federal government should return to the New Deal model and should abandon today's Great Society approach to governance. In the latter instance, government funds go to public sector vendors of goods and services, not to the poor. Under this "trickle-down government" system, such politically wired groups as trade associations, rich people, non-profit

organizations and highly educated professionals rapidly become dependent on and rapidly capture federal programs, and cause them to be run for *their* benefit and with ever-mounting costs and inefficiencies. New Deal style direct cash support to intended beneficiaries ought be the hallmark of most federal social welfare programs -- an approach which will create more cost-effective and flexible government while eliminating middle men, defunding trickle-down governance, maximizing free choice, minimizing government intrusiveness and making federal programs less subject to capture and mindless expansion.

(4) Please elaborate on your position on eliminating each of the following federal departments: Commerce, Energy, Education, and Housing and Urban Development.

Elimination of the four Departments should in and of itself should be assigned a very low order of priority. On the other hand, elimination and defunding of the subsidy and categorial programs *within* the four Departments should occupy Congress' principal attention. Spending scarce political capital on the symbolic elimination of Cabinet agencies makes little sense if the end result is a mere act of reorganization -- if all that happens is that existing programs are shuffled to different Cabinet agencies. (The House Budget Resolution has its eye on the right target as did the A to Z reforms of the 103rd Congress.) Mere elimination of Cabinet agencies and Secrertaries (in an era where Cabinet meetings are an increasingly unimportant means of establishing federal policy) will prove a false, cosmetic, empty calorie approach to reform unless the elimination of a Cabinet agency flows naturally from the fact that its principal activities are no longer being performed. In fact, to use but one example, federal education programs which are buried further within such already ungovernable entities such as HHS are likely, following the elimination of the Educaton Department, to grow faster than they do today.

Mr. SCHIFF. Thank you, Mr. Horowitz.

Mr. Marshall.

Mr. MARSHALL. Thank you. As the last formal speaker of the day, I would like to once again thank the committee for coming out here, and thank Congressman LaTourette for arranging this, and if I may extend a personal note, I would like to particularly welcome Congressman Zeliff, whom I do not know, but I am a New Hampshire native and although I am Ohio-adopted, I am from that State originally. So welcome, Congressman Zeliff.

The issue that I want to talk about today is federalism and Federalization, by which I mean the relationship of the Federal and the State government. Federalism is the policy dealing with decentralized government. Federalization is the phenomenon that occurs when the Federal Government moves into areas traditionally dominated by the State. And the issue that I want to discuss today is how the Congress can begin to develop the appropriate parameters between Federal and State authority.

The last 50 years has seen unprecedented growth in the size of the Federal Government. We have seen it illustrated previously. At one level, this is not surprising. Historically, States have not always been adept at dealing with difficult problems and have very often been insensitive to some of their constituency. More importantly, the problems have gotten more complex in society and more complex problems have often required national kinds of solutions rather than simply State solutions.

Take for example air traffic. It would not make a great deal of sense to have each State regulating Federal air traffic safety. It makes a lot more sense to have a Federal Government involved when so much of the phenomenon that needs to be regulated or needs to be overviewed exists as a national phenomenon rather than within State boundaries.

But there are costs to putting this much power within the Federal Government. One, you lose the State as effective laboratories, what is called laboratories of experimentation. Having 50 different States, allowing 50 different States to apply different kind of legislative programs, can often lead to a discovering of which is the best program, which is the most workable program. If you just have one program, you do not get that kind of comparison available to you.

Similarly, you lose the States as competitors with each other in developing innovation.

Third, an expanded Federal bureaucracy is often unresponsive to local needs and it is important very often to have local officials who are more aware about how a particular problem reacts in their particular community.

And finally, extending power to the States works as an effective check against the extension of power by the Federal Government, which I think the framers thought was of value in its own right.

But having said that, it is quite clear that at times you need Federal intervention. How do you decide when something should go to the Federal Government and when it should not? My suggestion to the Congress is rather than dwelling on whether an issue is important or not, which is what Congress generally does, they should look at more objective considerations, because what is important is very much in the eyes of the beholder.

For example, clearly murder is the most important criminal offense that needs to be prescribed. But it has traditionally been within the parameters of the States and there is no reason to move it from the States, so we do not need to make a Federal law on murder. More recently, we made a Federal law out of carjacking. Why? I mean carjacking is a terrible crime, but it does not need to be made a Federal offense, requiring the expense of Federal dollars to investigate, enforce and try those kinds of cases.

And if I could, let me offer just a few kinds of criteria as to whether something should be a Federal or a State problem. The first would be whether or not the phenomenon is interstate or whether it exists between State boundaries. That is the example of the FAA that I used previously.

A second is whether there are important needs for uniformity. Business, for example, often benefits by having one centralized set of regulations rather than 50 different regulations that it has to respond to. It is much more expensive for business to have to conform its activity to 50 different, and sometimes competing, sorts of regulations than having one kind of authority. So when you are dealing with businesses that are necessarily interstate, it makes sense to have Federal regulation.

A third and often forgotten consideration is that having decentralized powers often increases the total cost of government. Take, for example, environmental regulation or product safety regulation. To do those effectively, you have to have experts, you have to have accountants, you have to have scientists, you have to have technicians. If we forced every State to incur the cost of having a regulatory task force, the overall cost of government, State and local, would far exceed what an appropriate and lean, efficient Federal regulatory agency would be able to perform.

Fourth, we have to be concerned about when State government may not act appropriately, and there have been many examples in our history where that has been so. If we had not had national anti-discrimination laws, we would not have had any anti-discrimination laws at all in significant parts of the country.

And finally—and this is from my own experience working for a State and working within a State enforcement agency, the State attorney general's office—sometimes you need the Federal Government because the economies of scale demand that you have the kind of resources that the Federal Government can put into an issue. Many corporations' budgets exceed the entire budgets of many of the States in the country. To say that the States can enforce regulations against these companies is to belie possibility. We brought a case against one of the most powerful and largest corporations in America. We were clearly right on the law, they clearly violated the law in question, but we did not have the resources to be able to prevail. There is economy of scale. As it becomes more efficient for companies to increase in size, often it is more efficient to go to a central government.

Let me finish with one final point. Despite all these concerns, the Federal Government keeps getting bigger. Why? Well, one reason is lobbyists have figured out it is cheaper to go just to Washington and lobby one government than lobby all 50 State governments. But the other reason, and this is what Congressman Sanford was

alluding to on the last panel, is that Federal politicians have often not responded responsibly. Why not? Because of us, because of the voters. We think carjacking is a problem, so we tell our Federal elected officials to do something about it. They cannot say no, this does not belong in my jurisdiction, it belongs someplace else, because we are not trained to look at the differences between exercising Federal and State power.

And to answer Congressman Sanford's question in part, if I were a Federal politician, I would say look, I really support what you are doing, I support this law, but I cannot as a Federal elected official vote for this law because that would violate a principle of federalism. It is not going to be easy to do that, but we have to train the electorate on these issues. How are we doing so far? This is where I have some questions with the Congress—it seems to me that you cannot keep telling me that you want to decentralize Federal power and then propose the nationalization of tort law, for example. That has never been done previously, it is one area that has traditionally been left to the States. It is totally inconsistent with the principle of decentralization to suddenly say we want to nationalize this.

There are other examples as well, but my time is up, and I want to thank the committee.

[The prepared statement of Mr. Marshall follows:]

TESTIMONY OF WILLIAM MARSHALL
PROFESSOR OF LAW - CASE WESTERN RESERVE UNIVERSITY LAW SCHOOL
PRESENTED TO THE HOUSE OF REPRESENTATIVES
COMMITTEE ON GOVERNMENT REFORM AND OVERSIGHT
JULY 14, 1995

Mr. Chairman and Committee members, thank you for providing me with the opportunity to discuss with you some of the issues regarding the reorganization and reevaluation of the structure and size of the federal government. My name is William Marshall, and I am a professor of law at Case Western Reserve University in Cleveland, Ohio.

The specific issues that I will address concern federalism and federalization -- that is the allocations of government power and authority between the federal government on the one hand and state and local government on the other. My hope is to provide some insight on such current topics as when it is appropriate to return regulatory and program authority back to the states and when, on the opposite side, it is appropriate for the federal government to move into, or 'federalize,' areas that were in the traditional jurisdictions of the states.

A. Background -- the values of federalism

Before proceeding to current issues, it may be useful to provide some background on the values of federalism and decentralization. There are, of course, numerous problems created when too much regulatory and programmatic authority is concentrated at the federal level. First, the ability of states to serve as legislative laboratories experimenting with various types of solutions to address particular problems is lost when the federal government imposes its own uniform approach. Second, national uniformity also reduces the ability of states to compete with each other in creating better solutions to difficult economic and social issues. Third, centralized authority places decision-making in a place removed from the actual problems sought to be redressed; and local authorities often have a better, first hand understanding of the particular problems facing their communities. Finally, federalization also diminishes the role of the states as a check on the power of the federal government and cuts into the traditional role of the states as the primary source of the citizens' duties and obligations.

Notwithstanding these problems, the last sixty years have seen an enormous growth in the size of the federal government and the 'federalizing' of state law, by which I mean the increasing involvement of the federal government in matters previously left to the states. Of course, at one level this trend is not surprising. Historically, states and local entities have not always been responsible or adept in responding to pressing economic and social concerns. Moreover, an increasingly interdependent economy and an increasingly national culture, in which the importance of state ties and identities has tended to become diminished, have led to

economic and social problems that are national in scope. National problems, in turn, tend to invite attempts at national resolution.

In many cases recourse to a central authority is quite desirable. State boundaries are often inadequate in rationally setting divisions of regulatory authority. Consider water pollution. It does not, for example, make sense to have the Vermont side of the Connecticut River governed by one set of environmental standards and New Hampshire's side governed by another. In other circumstances, however, recourse to a centralized authority may not be appropriate. Is a federal car-jacking law really necessary? Do we need national standards for the control of odometer tampering?

The task, then, is to develop a set of principles from which to evaluate whether governmental authority should be exercised at the state or at the local level.[1] With this in mind let me offer a few observations as to when exercising government authority at the federal level is appropriate.

B. Considerations in support of exercising government authority at the federal level

1. A first consideration is whether the problem to be addressed by regulatory or programmatic intervention occurs as an interstate matter or whether it is contained within state boundaries. This is the problem raised by the Connecticut River example, noted above. If the regulatory concern crosses state boundaries, then federal jurisdiction over that problem is the most sensible course.

2. A second consideration (termed by economists as the question of 'externalities') is whether the source of the problem that is sought to be redressed occurs in a state different from the state (or states) where a significant amount of the harm occurs. This type of issue often exists in the environmental area when, as it so often happens, the state which is the source of pollution is often not the state which suffers the greatest effect of that pollution. In these circumstances the home state may not wish to address the regulatory issue because the harms fall elsewhere and there is significant advantage to the home state in leaving the matter unregulated. The state of Ohio, for example, might not want to impose environmental regulation on a factory on its side of the Pennsylvania-Ohio border because to do so might increase the operating costs of the factory threatening its competitiveness and possibly jobs even though that factory

[1] I should note that in developing this set of principles the United States Constitution will only be of little help. The Supreme Court has made it quite clear that, with very limited exception, the lines of demarcation between federal and state and local power are to be determined as a matter of policy by the Congress and not as a matter of constitutional law by the courts.

might be emitting emissions causing pollution damage to those directly to its east -- Pennsylvania. Since Ohio is not suffering the harms of the pollution, it has no incentive to address the pollution concern. In these types of circumstance; i.e. when the costs of one state's activities are suffered by another, federal intervention is again appropriate.

3. A third consideration is whether there is a need for uniform standards. Often decentralized authority is extremely inefficient from an industry's standpoint and can threaten competitiveness by requiring that industry to adjust its operations to become in accord with fifty or more sets of standards. Similarly, at times differing regulatory requirements may be inconsistent making industry compliance virtually impossible. In these circumstances, the creation of one uniform, centrally enforced standard is again appropriate.

4. A fourth consideration that is often forgotten is that decentralization often increases the costs of government thus imposing additional burdens on the taxpayer. For example, in an increasingly technologically and economically sophisticated environment, regulatory intervention often requires the use of highly-skilled experts, analysts, and accountants; and the costs inherent in maintaining this type of regulatory task force are quite sizable. It is therefore less costly and far more efficient for there to be one regulatory authority incurring the costs of these analysts and experts, than to have fifty similar regulatory task-forces throughout the country. In this sense, the need for centralized governmental authority echoes some of the forces at work in private industry. Economies of scale often demand that a company become larger in order to become more efficient. A similar principle also can apply to government.

5. A fifth consideration is whether there are reasons to distrust action at the state or local level. Most state and local governments, of course, act legitimately and with due concern to all the persons in their jurisdiction. But unfortunately, this is not always true nor has it always been true. There is no doubt, for example, that if anti-discrimination requirements had not been enacted and enforced at the federal level, they would not, in many states, have been enacted or enforced at all.

6. A sixth consideration is whether decentralized authority will lead to circumstances in which little or no necessary regulation will occur because a state will be reluctant to impose regulations on its industry for fear of losing that industry to another state. Let me provide an example. Assume for the moment that pollution control is a desirable goal. Whether a state chooses to actively enforce pollution standards, however, can be risky business. If the state chooses to impose stringent environmental regulations on its companies it may risk having those companies leave the state and move to a competing state

where regulation is much less effective or is non-existent. In those circumstances the state, if it wants to maintain its business climate, could be forced to deregulate. This phenomenon, often called a "race to the bottom," will frequently occur in the absence of national standards that would otherwise inhibit states from competing for jobs by undercutting necessary and valuable regulation of its business and industry.

7. A seventh and final consideration (although let me stress this list is not intended to be exhaustive), is whether placing regulatory authority at the state or local level will seriously undermine regulatory goals because enforcement costs will effectively place the regulatory matter beyond the reach of the state and local enforcement authorities. Let me provide an illustration from my own experience. When I worked in a state's attorney general's office we attempted to enforce a regulatory law against one of the largest corporations in America. We were unable to do anything more than obtain a nominal settlement. Why? It wasn't because the law was unfavorable to our position -- we clearly had the law on our side. Rather the problem was that we simply did not have enough resources to be able to take on a major corporation.

This is not an isolated problem. After all, the annual budgets of many corporations exceed the total budgets of many states, and unlike a state enforcement agency which has numerous responsibilities, the battery of lawyers representing a huge multi-national does not have other distracting priorities. Accordingly before too quickly decentralizing, we must be aware that as industries expand in size and complexity and the dangers they pose to the society became more severe, the cost of monitoring and regulating their activates becomes greater. We, therefore must be wary that if we allow industry, simply on the basis of its size alone, to escape regulation, we are in effect placing them above the law and the public at great risk to potential abuse.[2]

This last consideration leads to the recognition of a dark side within the decentralization debate. We must be extremely concerned that decentralization, when it does occur, is based upon legitimate federalism policies and not based upon a strategy designed to end run legitimate regulatory policy by placing enforcement authority in entities that do not have the resources to effectively monitor and enforce sound and necessary legislative goals.

---

[2] Because of this concern, we should be wary of abolishing the private tort remedies which also serve as mechanisms to promote regulatory compliance.

C. The politics of the federalism/federalization debate

There is no question that there exists many federal laws and programs that can not be supported by reference to the considerations noted above. There is, in short, significant room to defederalize. But why has federal power expanded as it has? Understanding that issue may assist us in better addressing federalism concerns in the future.

This understanding, surprisingly enough, is not all that difficult. Quite simply, the expansion of the federal government is often as much a result of the dynamics of the political marketplace than a response to truly national concerns. Lobbyists, for example, have quickly learned that their most efficient place to do business is in Washington rather than the state capitols -- if only for the simple reason that is far easier to change one set of statutes than to change fifty state laws. Their own efficiencies, in short, lead lobbyists to Washington rather than to the fifty state capitals.

But federal elected officials also have not responsibly protected federalism's concerns. Again the reason is straightforward. Political pressure often demands that a federal elected official take action on a particular problem in order to demonstrate sensitivity to the concerns of his/her constituents. Consider for example the recent law making car-jacking a federal crime. As far as I know there is nobody who believes that the federal government is better equipped or more motivated to deal with car-jacking than are state and local authorities. But because of the public outcry against this crime, it became extremely difficult for elected federal officials to oppose making this crime a federal offense on the abstract grounds that enforcement is best left to the states. Federal office holders, like all office holders, are in the business of incurring voters' support, and if voters desire a particular type of action, the federal office holder will want to be seen as supporting that action even if the federal office holder honestly believes that the more optimum solution may lie at the state or local level.

Because of the political realities, in short, federalism concerns are likely to have only marginal effect in influencing whether statutes federalizing state law will be approved. The deciding factor will likely continue to be whether the proposed legislation itself is politically attractive in and of itself. Let me make myself clear. I am not suggesting that federalism concerns will never be of some influence to a federal elected official when considering proposed legislative action; but unless the political dynamic is somehow changing, it will seldom be true that popular measures will be defeated because they conflict with a representative's theoretical vision of federalism.

And unfortunately, that dynamic is not changing. Currently even as both sides are singing the praises of returning power to the states, Congress continues to propose legislation furthering the continued federalization of criminal law (including imposing criminal sentencing requirements upon the states) and most dramatically, has proposed the federalizing of state tort law, an area that has traditionally and solely been within state prerogative.

In sum, the time has come for us to seriously reexamine the trend toward federalization that has occurred in the last sixty years and to reverse some of that trend. But it should not be automatically believed that decentralization is always good and centralization is always bad. Rather we should begin to develop a coherent set of principles to begin to address federalization and federalization issues. We are not there yet. A cry to return power to the states while simultaneously pushing for increasing federal jurisdiction over crime and the nationalization of tort law does not reflect a coherent approach to the federalism/federalization debate.

RESPONSE OF PROFESSOR WILLIAM MARSHALL TO QUESTIONS OF THE HOUSE OF REPRESENTATIVES COMMITTEE ON GOVERNMENT REFORM AND OVERSIGHT

JULY 25, 1995

Mr. Chairman and Committee members, thank you for providing me with the opportunity to respond to questions on federalism and federalization.

My responses to your questions are as follows.

Question 1. Throughout your testimony a majority of your examples on the need for federalism cite environmental problems. But should we assume that state and local governments are less able or less willing to protect their environment than is the federal government? What functions are most appropriately left to states and localities?

Response 1. For a number of reasons, environmental regulation is an area where state and local government are less able, and at times less willing, to protect the environment than is the federal government. It is also an area where placing regulatory power at the state and local level may actually increase the overall cost burden to the taxpayers because economies of scale argue in favor of a centralized authority. A prime reason for this is expense. Environmental regulation requires a great deal of scientific expertise and technical resources and the costs of maintaining an effective regulatory agency may simply be too expensive for many state budgets. For similar reasons, having states as the prime enforcer of environmental laws would be inefficient as it would require the maintenance of 50 regulatory bodies all employing highly skilled experts rather than one central body in which the need for maintaining overlapping areas of expertise would be eliminated. In this way centralizing regulatory authority over the environment will actually reduce the total costs of regulation. A second reason arguing in favor of federal enforcement is that environmental regulation is one area where the problem of externalities is readily apparent. In many environmental cases, the brunt of environmental harm is not suffered in the state which is the source of the environmental hazard. There is, therefore, little incentive for the state that holds the cause of the pollution to address the problem. A third reason is that environmental regulation is a classic area where problems involving, what the economists term 'the race to the bottom,' can easily occur. In a business climate in which the states are competing with each other to attract industry and business, a state might find it is easier to gain a competitive edge if it

refrains from environmental regulation within its borders. The end result of this competition is likely to be a lessening of necessary and appropriate environmental regulation -- at great health risks to the citizens.

This does not mean the states and localities should be out the of business of environmental regulation. For example, state and local control is particularly advisable for environmental issues that require extensive land use planning. For this reason, states and localities should determine the best uses for their surface and ground waters and should be given a free hand in the ultimate regulation of land uses in order to achieve these water quality goals including regulating various non-point sources of pollution. Similarly, in Superfund cases, the liability and clean up provisions of federal law should be applied only to the worst sites allowing states and localities significant leeway in determining the appropriate approaches to the clean up of less contaminated areas -- including the decision of how to apportion liability. Third, I agree with current policy which leaves most of the siting authority for solid waste and hazardous waste landfills within state and local prerogative. Last, I would suggest that if states or localities choose to provide greater environmental regulation than the minimal standards set by the federal government or if they choose to share regulatory authority, they should be free to do so. The problems of externalities and the race to the bottom which would normally argue in favor of federal intervention would obviously not be at stake in these circumstances.

Question 2a. In regard to the federalization that has occurred within the last sixty years, what problems do you foresee if this trend continues?

Response 2a. The problems created by a continued unchecked trend towards federalization are multi-fold. First states and localities remain the primary guarantors of citizens' rights and obligations (most law affecting the average citizen -- such as laws regulating contracts, torts, property, and crime remain at the local level); but if the federal government continues to usurp what it believes to be the most important matters for itself, the necessary respect and political commitment to the viability of state institutions will be eroded. Second, increasing the expansion of federal law will continue to have significant effects on the federal judiciary requiring either a major expansion in the number of federal judges, the number of federal courts and the number of federal prosecutors, etc., or the maintenance of dockets in which the business of the federal courts will come to a grinding halt. Third, the increased involvement of the federal government in matters left to the states undercuts the value of states as laboratories for experimenting in resolving pressing social issues. A single nationally-imposed solution to an issue does not allow for the investigation of alternative approaches. Fourth, retaining power in the states helps accomplish the Framers goal of not concentrating too much power in any one political entity. Enforcing federalism, like enforcing separation of powers, is an important aspect of protecting individual liberty. Finally, the distance that necessarily exists between the federal government and the public which it serves can also be problematic. Not only do local officials at times have a better grasp on how particular problems affect their community, but the distance between a central government and the people may also work to create an alienated (and therefore angry) electorate that no longer believes it has any effective power.

Question 2b. What strategies could be used in an effort to equitably disburse regulatory responsibility between federal, state, and local governments?

Response 2b. Regulatory responsibility between federal, state, and local governments should be allocated entirely on the basis of whether or not there are not legitimate reasons to place the matter in federal control. The allocation of authority should not be based on the merits of the legislative proposal itself. For example, there is clearly no more important criminal issue than murder but jurisdiction over murder should not be given to the federal government because they are no reasons implicating federalization concerns that call for making murder a federal offense. The problem now, as I see it, is that the perceived importance of the issue has become the over-riding legislative concern. (Was it really necessary to federalize car-jacking?) But if Congress' test for federalization continues to be based on its views of the merits of the substantive matter at stake, then virtually anything could be a subject of federal law -- depending only upon who controls Congress. The better strategy, as I see it, is for federal elected officials to exercise discipline in not always authorizing federal action in response to important matters (even when it is politically expedient) and to also educate the citizenry that public itself should not always demand federal action when a social or economic problem occurs.

Question 3. Do you advocate one position over the other or do you believe there is a necessity to have a balance of both federalism and federalization?

Response 3. Effective government requires a balance of both federalism and federalization. I would suggest, however, that a presumption be maintained in favor retaining power within the state unless reasons can be advanced why the matter is an appropriate subject for federal intervention.

Question 4. Please elaborate on your position with regard to the elimination of the following federal departments: Commerce, Energy, Education, and Housing and Urban Development.

Response 4. The testimonies of the representative from KeyCorp and the Presidents of Cleveland Cliffs, LTV, and TRW seem to me to offer a reasoned response to this question. Before agencies are eliminated, they should be closely examined in order to redefine and redetermine their appropriate role and functions. Undoubtedly, there are sound reasons to have some federal involvement in education, housing, commerce, and energy policy. Whether that involvement justifies a full Cabinet position, however, can only be determined after a thorough evaluation of the particular agency is completed.

Mr. SCHIFF. Thank you very much, Mr. Marshall. [Applause.]

Mr. SCHIFF. I have to say, before recognizing members for questions, that we are due to complete this hearing by about 3:30 because members have flights to catch. And so depending on the number of questions will determine the amount of time we have that we can go back to people in the audience from the lottery.

So let me start right on questions. Mr. Horn.

Mr. HORN. Thank you, Mr. Chairman.

I am not going to argue with you, Mr. Marshall, on tort law, but they are completely different questions. If you have health care, you can have 50 different types of health care at the State level with State programs, but there ought to be one standard which is preventing the absolute, I would say criminal, rise in the cost of health care, caused by frivolous lawsuits. But I will not debate that today, that takes hours.

Mr. MARSHALL. Congressman, if I could respond for a second. I am in favor of tort reform.

Mr. HORN. Yes.

Mr. MARSHALL. But if we are serious about returning power to the States, let us let the States experiment.

Mr. HORN. They have.

Mr. SCHIFF. Will the gentleman yield for a moment?

Mr. HORN. Yes.

Mr. SCHIFF. I have to point out that maybe nationalization of tort law with respect to product liability makes some sense, that there be one standard to judge all products, but we went ahead and nationalized punitive damages if two neighbors get in a fistfight on their front lawns. And so I am in agreement with Mr. Marshall on that. I yield back.

Mr. HORN. Well, that is your committee, Mr. Vice Chairman, that is not——

Mr. SCHIFF. We have oversight of the whole——

Mr. HORN. You are right.

Mr. ZELIFF. Could I just ask a quick question?

Mrs. COLLINS. Well, could I be a referee here, if nobody minds?

Mr. SCHIFF. Wait, it is Mr. Horn's time, if he would like to yield to you. Mr. Zeliff, I think has requested to you, but——

Mr. ZELIFF. Just for a second on that same point and then I will not ask my questions and you can have my time. How is that?

Mr. HORN. OK.

Mr. ZELIFF. Just while he is on the subject of tort reform, if you do not like what we are doing on it, how would you do it?

Mr. MARSHALL. Oh, I like the idea of caps, I think those kinds of things ought to be experimented with. I like the idea of creating greater disincentive to frivolous suits. I think those are good ideas. The question is where do we enact them. Let us let the States experiment with them. It is the traditional province of the States. I think there are a lot of good things to do there, but rather than having one national solution which would prohibit the States from doing things or preempt what the States do, let us keep it where it is. This seems to be an example of the kind of area where the Congress is stepping in, in areas where the States have always been in. You know, the problem is, if you do not have objective set of criterion to decide when Federal intervention is, if that is your

particular issue, you are going to say that is where Federal intervention ought to be. If you think your particular issue is what Mr. Schiff was referring to, then you are going to say Federal intervention is there.

Unless we can remove the question of is this law a good idea from the question of should we make it a Federal law, we are going to continue having an expansion of Federal power.

Mr. ZELIFF. Thank you. Thank you also, Mr. Horn.

Mr. HORN. Thank you. You both are very stimulating and provocative speakers and we could probably devote a whole hearing to you in Washington and really get into some of these things.

But let me just get back to the management fraud, abuse situation. I do not know if you were here earlier this morning when I happened to ask about the BOB/OMB bit and should management be merged with budget. Now you, as a former general counsel, there might well have some ideas, but all of my experts that I know on public administration who have served in numerous administrations of both parties say we are not getting anything out of OMB in terms of a real role for management, it is being swallowed up by budget, and we ought to have a separate office of management. How do you feel about that?

Mr. HOROWITZ. I do not think you could make a larger mistake than that. You would elevate this issue up once again, which is an issue that is the most ripe for misleading, if not cynical, demagogy. That is my experience in this whole area. The fact of the matter is that it is hard-wired in the system for government to have these inefficiencies in management and that is why some of these laws get passed, precisely to have these inefficiencies when you look at them hard.

And the more we do to sort of give the management guy now not only within the agency reporting authority to the Secretary, but now have a management czar at the side of the President, that is the kind of one-shot hit that treats the symptoms, that creates the illusion that there will be change. Management of the Federal Government is passage in the last Congress of A to Z and passage in this Congress of the Kasich resolution, and I think that that is the leadership role.

Now let me say, Mr. Horn, there are areas where there can be management.

Mr. HORN. Thank you.

Mr. HOROWITZ. I have said that here. Like what you are doing in A–76, for example. What that does is create a competition between the government sector and the private sector and says to the Federal people, you have to earn your jobs and the continuance of your functions. But the internal management of how the government should do it is so subordinate when you get to Congress and at a Federal level as distinguished from cities, from the question of whether you should do it, that I think in a strategic sense, focus on the latter and just ramp down the significance of the former because there is a conflict between the two.

Mr. HORN. Well, let me just in closing, Mr. Chairman, let me just——

Mr. SCHIFF. I am willing to extend the gentleman another 2 minutes because part of your time was used.

Mr. HORN. OK, thank you. Let me just note that as you will recall, the Hoover Commission in 1949, which was the first major review of management by the executive branch since 1789. They suggested in that implementation, that there be an Assistant Secretary for Administration in each cabinet department and that the person should be a career official. And for a number of years, at least under President Eisenhower, in whose administration I served, it was. And it was taken seriously. But both liberal Democrats and conservative Republicans politicized it and started pushing out career executives, so there was no continuity between the administrations, and putting their own person in there to control the management processes.

Now when we talk about management processes, we are talking budgeting, we are talking staffing, we are talking personnel, we are talking planning and evaluation, traditional management functions. And I think there is a case to be made to say that you should have a career Assistant Secretary or Undersecretary, as some are proposing, reporting directly to the cabinet officer that has been nominated by the President, confirmed by the Senate. You then can get some order out of those processes and use them to help, be it on the evaluation side, on the budgeting side, or on other things that should not be political. I mean the usage and the end result might be political, but we ought to at least have the staff work done right. And the fact is that there is fraud and abuse. As I said, I just had the HHS Inspector General in yesterday. Several hundred million dollars were collected last year by HHS alone through the Inspector General operation. So I do not dismiss the role of Inspector General, which I think you did a little. And your views here are immensely colorful and you are absolutely right about fraud and abuse in the Civil War, and we will all recall the Truman Committee in the Second World War where they went out and nailed fraudulent government contractors. But to me it is a simple matter of honest public administrations. And it seems to me if we are going to hold people accountable, hold them responsible, we need to hold a career Undersecretary and the cabinet officer responsible for what goes wrong in a department.

Mr. SCHIFF. The gentleman's time has expired. I need to go on.

Mrs. Collins.

Mrs. COLLINS. Thank you, Mr. Chairman.

Professor Marshall, I want to ask you a question. Former Speaker O'Neill once said—and I know Mayor Daley said all the time—"Politics is local," said all politics is local. So as programs are evolved and funds allocated directly to State and local administration under various re-invention plans, are we risking politicizing programs at the local level, one, and if you think so, how do we guard against doing it?

Mr. MARSHALL. Well, I mean, that is one of the reasons why there is Federal intervention. The people who are in favor, for example, of product liability reform, do not trust the States to do this on their own. So that is the exact same example that other people have used before about when you Federalize and when you do not Federalize. It seems to me that there are a number of areas where traditionally local government has not been effective. Housing policy is one of them unfortunately. You and Congressman Flanagan

are from Chicago. You know that in Chicago, the creation of the segregated communities that occurred did not happen by happenstance, it was directed by the Chicago Housing Authority in the 1930's, 1940's and 1950's.

Mrs. COLLINS. True.

Mr. MARSHALL. What you have to do is try to figure out in what kind of circumstances that local authority might not be trusted. And because politics is local, sometimes personalities get into it more than issues. If you are from a small town and a welfare recipient in a small town, the local person knows and might say well, she is not entitled to anything because I have known her family for 20, 30, 40 years. Well, maybe there is a legitimate reason there for that person not to get welfare, but when personalities get into it, you sometimes do not get just results.

So you are absolutely right that one of the things you have to be concerned with is when there is a possibility that local and State authorities will not act objectively.

Mrs. COLLINS. I had another question I wanted to ask—did you want to respond to that?

Mr. HOROWITZ. Well I headed up the first working group on federalism in the Reagan administration. I want to respond in a very different kind of way. The real problem is that the Federal Government, as I have indicated, does not focus on lots of these issues. Also, the sheer size of the Federal Government makes what this Congress is doing in federalism, in my judgment, just enormously exciting in terms of democracy. When I was there, HHS made 250,000 individual grant decisions per year. What that meant was that grant decisions were therefore made at a level of bureaucracy where no politically accountable official came within a 10 foot pole of those decisions. And the fact of the matter is that with federalism you get a politically accountable official there.

The second development that happened was when I was there, when we were starting with federalism, it was an irony, the Governors, however much they talked about it, were against it. What they liked was the system where they could complain about the Federal Government, but not be politically accountable. If they had authority, they might have political accountability. So they were the opponents, they were looking for safe harbors and the real message they sent us in the clinches was they did not want it.

We have got a very different crop of Governors who are ready to make mistakes, take chances and be these labs of democracy.

Mrs. COLLINS. Well, beyond the Governors, what about the local level?

Mr. HOROWITZ. Well, I would say this on the local level, the worse thing that happened to cities in a strategic sense in this country is that the mayors of the cities thought that they could bypass the States and cut deals with committee chairmen in Washington because it was glamorous to do it. They did not fight the fights in their backyards and in the end they got some Federal money and that is declining and the cities have not done well.

I think States are today level playing fields, more than the Federal Government is, and I would be terrifically opposed in these block grant programs to earmarks for States. Let the cities really

fight it out with the suburbs, show their worth. The mayors do not want to do it.

Mrs. COLLINS. You said you would be opposed to block grants to the States?

Mr. HOROWITZ. No, I am opposed to a guaranteed pass-through formula to cities, which is what we had in some of the old block grants, because of the political power of the mayors in Washington. The illusion that the cities could survive by having leverage in Washington was the frail reed which helped the cities sink over the last 20 years.

Mrs. COLLINS. Well, what makes you think the States will not sink? I mean, you know, the same problem on a smaller scale can also be the same problem on a higher scale—on a larger scale.

Mr. HOROWITZ. Well, I think the States must live within their budgets, I think the States manage better, and the reason I have indicated is that at least in the States when decisions get made, politically accountable officials who have to pay the price for bad conduct are involved in the decisions. At a Federal level, they are not.

Mrs. COLLINS. Well, at the city level they are too, they are on the front line.

Let me ask another question. If Federal resources for education—and this is to Professor Marshall—if Federal resources for education, housing and commerce are consolidated to block grants, how can we ensure that the States will use those resources to enhance those block grants? That is one question. How can we ensure that the funds are spent on those most in need and not those where the biggest political number of people happen to be in that State? And how can we ensure accountability, Professor?

Mr. MARSHALL. Well, those are very difficult questions. I think that when you engage in decentralization, which I am in favor of—I think it is necessary to do some decentralization—you have to be sure and do it in a logical way that makes sense. In some areas, I think it is appropriate to allow some experimentation and give the States a free hand. Commerce in some areas, doing some kind of economic development might be one of them. It makes sense to give the local community somewhat of a free hand in trying to figure out how it wants to use its dollars to try to renovate a troubled community. But in other areas, you have to be very concerned that the people who are less able to protect themselves are getting the kind of benefit that the program is intended to provide.

Mrs. COLLINS. Final question, if I may, Mr. Chairman. I have been distressed by efforts of this Congress to eliminate and consolidate Federal agencies without any action to adequately evaluate the programs and functions. Now Professor Marshall, I would like to know what you think and do you think there is, and if you do, what is the danger of undertaking massive categorical liquidation of Federal cabinets without any kind of proper review?

Mr. MARSHALL. Well, I think this is what the panel said last time. The last panel spoke to this directly.

Mrs. COLLINS. I am asking you.

Mr. MARSHALL. Well I agree with them. I think that what they said—the problem with doing that, to engage in just chopping without thinking about what you are doing, you are going to throw the

baby out with the bathwater. Why did so many of these agencies arise in the first place? They did because there was political pressure on the United States, for example, to create a Department of Energy because there was an energy crisis. That is why it occurred in the first place. There was a reason for the agency to develop. Now what happens unfortunately in Washington—and this is part of the dynamic of government, it happens in the State capitols too, by the way, and it happens in the cities—is that things often expand and they lose their focus.

So you have got to go back, and I think this is what many members of the panel were saying, you have got to go back and re-examine what the goals of the agencies are, see where it has expanded beyond where it began, see where the problems may or may not have gone away, and then engage in the kind of cutting that is required, rather than cutting arms off at the beginning.

Mr. SCHIFF. I am going to have to interrupt at this point. I do not mean to inject, but we are reaching the end of the time and I appreciate the lady's——

Mrs. COLLINS. Thank you, Mr. Chairman, for giving me as much time as you have, I appreciate it.

Mr. SCHIFF. Certainly, and I apologize for having to interrupt.

Mrs. COLLINS. That is all right. I am looking at this watch too.

Mr. SCHIFF. Mr. McIntosh had to catch his plane, so I am going to ask his question and then for the remaining few minutes we will go back to the lottery numbers and invite members of the audience to join us.

His question was—and unfortunately, time being short, I have to ask if you will just say yes or no. I realize there could be shades of gray, but what Mr. McIntosh would like to know, and you probably heard the question before, that of these four departments—HUD, Commerce, Education and Energy—would you dissolve any of them, or all of them? If it is a total yes or a total no, or let's just say a downsize, I will take that as a third choice, but as I say time is short.

Mr. Horowitz, may I call on you first?

Mr. HOROWITZ. I am going to answer in the quick sense. I would dissolve them all without a doubt, but I think the major problem and the real issue is to do away with the functions. Simply to dissolve the agency and keep them going by playing musical chairs is not the answer. The critical thing is to do again what the budget resolution did, which is to look into the program areas and zero them out. That is the real business I think the American people elected this Congress to do. But on the whole, I think abolition of the agencies will send a nice symbolic signal out that these are not things that Washington necessarily has to do and that will help Washington do the things it can do best better.

Mr. SCHIFF. Mr. Marshall.

Mr. MARSHALL. I am going to echo the comments by the captains of the major industry in Cleveland in the last panel and say that every one of these agencies probably should be examined and examined very closely. Undoubtedly they should be downsized. I think all of these agencies are beginning to do this themselves, but I certainly think that spurring them on by all of us and by the Congress is a good idea. But before we engage in any dramatic action

we should be careful what we are doing. I am uncomfortable with having States, for example, regulate nuclear power on their own. I am not sure the States have the capacities to be able to look at nuclear plants on their own and do that kind of regulation. We have to think before we act.

Mr. SCHIFF. Mr. Horowitz, I am going to ask one question and I want to note that according to Chairman Clinger, the record does remain open for another 10 days and I presume you gentlemen would be available to answer written questions if submitted?

[Affirmative nods.]

Mr. SCHIFF. I appreciate that. If this is too lengthy a response, I would be glad to submit it in writing, but you were with OMB in the Reagan administration, I believe?

Mr. HOROWITZ. Yes, sir.

Mr. SCHIFF. President Reagan never vetoed the appropriations for the agencies that you just said should be dissolved, did he?

Mr. HOROWITZ. Sure we did, we shut down the government and vetoed continuing resolutions. But again——

Mr. SCHIFF. No, did President Reagan veto the appropriations bills for the agencies that you have just said——

Mr. HOROWITZ. Well, among other things, he never had a chance because he got a package of continuing resolutions and he did not have a line item veto, so he did not have the power to do it.

Mr. SCHIFF. That is an answer, thank you.

I want to thank the panel very much for a very intriguing testimony from both individuals. I want to thank them and excuse them, and we have just a few more minutes and I am going to turn to the number list here. [Applause.]

These will be 3-minute presentations and we will do—I think we can do about three of them or so. No. 112, if 112 is still—112 is still here.

STATEMENT OF EILEEN H. FITZGERALD

Ms. FITZGERALD. I have copies of my testimony.

I will skip the introductory remarks and get with it. I am very concerned about the unprecedented amount of government control in education. Under Goals 2000—and despite the rhetoric to the contrary—there has been a definite movement away from hard core academics to an emphasis on feelings and beliefs.

Under the guise of identifying children from abusive homes, innocent school children are unknowingly being subjected to a variety of psychological assessments, such as Incomplete Sentence Technique, which you will find in Exhibit A. This is one of many techniques I used, as a licensed psychologist, to develop psychological profiles on high potential managers in industry and with patients at a counseling center.

My concerns are two-fold:

Techniques like this, which our tax dollars are funding, are designed to delve into a child's subconscious. We all tend to repress emotions and experiences that are painful. These and other techniques being used could result in repressed feelings and memories surfacing into a child's conscious awareness—memories that the child not only does not want his teacher or classmates to know, but memories that the child himself does not want to remember and is

not equipped to handle. There is no way any guidance counselor or school psychologist can know what is going on in the mind of every child in a classroom who is forced to participate in exercises like these. In counseling, we never open up wounds that we are not prepared to deal with. Many adults who voluntarily seek counseling often leave when some of their repressed emotions begin to emerge because they find them too painful to face. What recourse do innocent children have who are but captive members in a classroom?

My second concern is that through these and other so-called educational exercises, children are being taught from little on that nothing is private or confidential any more—not their feelings, not their innermost thoughts, not even what goes on in the privacy of their own home. What frightens me is that techniques like these have long been used in Communist countries where children are taught to report on their parents, thereby giving the State total control of its citizens. Parents from various communities here in Ohio have complained their children are coming home from school threatening to turn them in because their children were taught that if they do not like the way their parents are treating them, mentally or physically, they could report them.

I am also deeply concerned with activities such as that of the Ohio Education Association which is a branch of the National Education Association where in December 1994 at their Representative Assembly, a questionnaire which you will find in Exhibit B was distributed, "to collect information on far right groups and their activities in Ohio's schools and . . . make recommendations for strategies school employees can use to combat the negative impact of such activities." Just what are these negative activities to which they are referring? As you will note from the questionnaire, they are challenges made by parents to a variety of activities such as Goals 2000, elementary guidance, outcome based education, sex education and requests to inspect lesson plans.

Why, since inspection of school materials is permitted under Ohio law, is the Ohio Education Association wanting to combat what is a legal right of parents? This is a blatant and heinous attempt to silence the voices of parents who are concerned with what their children are being taught in the very schools their tax dollars are funding. I also find it exceedingly disturbing when concerned parents who represent mainstream America are labeled as members of the radical right because they dare to question aspects of their child's education. [Applause.]

This is censorship and government control at its worst.

As members of this committee, I urge you, if it be in your power and despite what you have heard to the contrary, to abolish the Department of Education and Goals 2000—[applause.] And to eliminate all funding to the National Education Association and to put the responsibility for educating children back into the hands of parents and local school districts, where it belongs. Thank you. [Applause.]

[The prepared statement of Ms. Fitzgerald follows:]

TESTIMONY PRESENTED TO THE U.S. HOUSE GOVERNMENT REFORM AND OVERSIGHT COMMITTEE

Parma Heights, Ohio
July 14, 1995

By Eileen H. Fitzgerald, Ph.D.
Brecksville, Ohio

Chairman Clinger, Members of this Committee, I would like to thank you for your commitment to tour this Country to hear the concerns of its citizens, and welcome you to the State of Ohio. In the essence of time, I will keep my comments brief.

I am very concerned about the unprecedented amount of government control in education. Under Goals 2000--and despite all the rhetoric to the contrary--there has been a definite movement away from hard-core academics to an emphasis on feelings and beliefs.

Under the guise of identifying children from abusive homes, innocent school children are unknowingly being subjected to a variety of psychological assessments, such as the Incomplete Sentence Technique which you will find in Exhibit A. This is one of many techniques I used, as a licensed psychologist, to develop psychological profiles on high potential managers in industry and with patients at a counseling center with which I was affiliated.

My concerns are two-fold:

(1) Techniques like these, which our tax dollars are funding, are designed to delve into a child's subconscious. We all tend to repress emotions and experiences that are painful. These and other techniques being used could result in repressed feelings and memories surfacing into a child's conscious awareness -- memories that the child not only does not want his teacher or classmates to know, but memories the child himself does not want to remember and is not equipped to handle. There is no way any guidance counselor or school psychologist can know what is going on in the mind of every child in a classroom who is forced to participate in exercises like these. In counseling, we never open up wounds we are not prepared to deal with. Many adults who voluntarily seek counseling often leave when some of their repressed emotions begin to emerge because they find them too painful to face. What recourse do innocent children have who are but captive members in a classroom?

(2) My second concern is that through these and other so-called "educational" exercises, children are being taught from little on that **nothing is private or confidential anymore, not their feelings, not their innermost thoughts, not even what goes on in the privacy of their own home**. What frightens me is that techniques like these have long been used in Communist countries where children are taught to report on their parents, thereby giving the state total control of its citizens. Parents from various communities here in Ohio have complained that their children are coming home from school threatening to turn them in because their children were told if they don't like the way their parents are treating them, mentally or physically, they could report them.

I am also deeply concerned with activities such as that of the Ohio Education Association which is a branch of the National Education Association where, in December of 1994 at their Representative Assembly, a Questionnaire(which you will find in Exhibit B) was distributed ***"to collect information on Far Right groups and their activities in Ohio's schools and...make recommendations for strategies school employees can use to combat the negative impact of such activities".*** Just what are these negative activities to which they are referring? As you will note from the Questionnaire, they are "challenges" made by parents to a variety of activities such as "Goals 2000", "elementary guidance", "Outcome Based Education", "sex education", and "requests to inspect lesson plans".

Why, since inspection of school materials is permitted under Ohio Law, is the Ohio Education Association wanting to "combat" what is a legal right of parents? This is a blatant and heinous attempt to silence the voices of parents who are concerned with what their children are being taught in the very schools their tax dollars are funding. **I also find it exceedingly disturbing when concerned parents who represent mainstream America are labeled as members of the "Radical Right" because they dare to question aspects of their child's education. This is censorship and government control at its worst.**

As members of this Committee, I urge you--if it be in your power-- to abolish the Department of Education and Goals 2000, and to eliminate all funding to the National Education Association, and to put the responsibility for educating children back into the hands of parents and local school districts where it belongs. I thank you for your time and attention.

Mr. SCHIFF. I would like to invite the person holding No. 2, to come up to the front please.

STATEMENT OF PATRICIA COOKSEY

Ms. COOKSEY. Two years ago, I joined thousands of frustrated taxpayers who felt that something was drastically affecting the safety of our economic freedom in this country. I have to tell you I have had a really good time meeting thousands of Americans. And today I wanted to bring to you four examples of the needs that we see for government reform. However, due to time, I am going to cut them to two.

Last week, I went with a group of taxpayers, middle class, mainstream Americans and senior citizens, to attempt to tour a newly leased, newly remodeled Federal bankruptcy court for two judges in Cincinnati, OH. The first day that we arrived, we were told that for security reasons, we could not enter. I do not think we looked that scary. We went back, the marshal told us that no one should have denied us entrance to the court. As taxpayers, we are spending $76,000 a month on this lease. The next day we went back and we toured marble hallways, walnut, two courtrooms plus an empty courtroom for two judges for a staff of fewer than 40 people that they have leased facilities to accommodate 100 people. The ceilings in this facility have been raised from 9 feet, which I find more than adequate even for my 6 foot 4 husband, to 13 feet, because the judges were not satisfied with the aesthetics. This, at a time when taxpayers have asked government to downsize, to use money efficiently.

One of the examples I am skipping is the Cost of Government Day. We know how excessive the use of our money has become.

The other example I want to give you comes from something that was faxed to me. It reads "To all EPA employees: Subject: Proposed Fiscal Year 1996 Budget Reduction." And I will tell you in advance it is signed by Carol Browner of the EPA. This is a department whose regulations have driven many Americans just crazy with roadside ruts that have been declared wetlands, decks that cannot be built because you might put a shadow over a mudhole. In this memo to all EPA employees, I read, "The House Subcommittee on Appropriations for VA, HUD and Independent Agencies has reduced EPA's Fiscal Year 1996 budget by 34 percent. This proposal is in direct conflict to the interests of the American people." I will skip down. "I am committed to protecting the EPA work force as much as I possibly can." The EPA works for those taxpayers who pay their salaries. For a government employee to determine that they will go against the way we voted in the November 8 election is irresponsible and we, the taxpayers, through the process, through elections, through petitions, through postcards are determined to see government returned to ownership of the people.

I grew up in Louisiana, there are a lot of swamps because the water does not move very much. For decades now spending has backed up like swamps, bureaucracies have mounted up like the moss and the stinky stuff in the swamps. The last election was like opening a pathway for the water to run out. [Applause.]

But there are those in Congress who are trying with all their might to plug that hole, to deny us the freedom like fresh flowing

water into our economy. We ask you to allow the reforms to go forward, cut the Department of Education, cut the Department of Commerce. Education Department does not educate Americans. We can handle our own business.

Thank you very much. [Applause.]

[The prepared statement of Ms. Cooksey follows:]

TRUE BLUE PATRIOTS

Testimony by Patricia R. Cooksey

before the 104th Congress

Committee on Government Reform & Oversight

July 14, 1995, Parma Heights, Ohio

I grew up with a dignity and pride that came from knowing I was an American - a citizen of the greatest land on earth - not that other lands or peoples were lesser - but that in our nation, we welcomed newcomers who honestly sought to become part of this nation and participate in its freedoms in their neighborhoods and in their jobs, as well. As a child, I learned that other nations had oppressive governments which sought to control people's lives, that some nations would and did write laws just to ensure that citizens could be trapped into civil disobedience and thus become enslaved by the very government that should have protected them. I learned that in some countries the newspapers said only what the government wanted them to say but that a report was just that in America - a relating of the facts not manipulated by some government official behind secret, closed doors.

Two years ago, I joined thousands of Americans whose gut instincts told them that something was threatening their memories of safety, community, and achievement remaining as the reality of our futures and of our children's futures. Our questioning of reality taught us some very disturbing facts. Today, I'd like to present 4 or 5 examples that clearly demonstrate a need for government reform, the kind of reform Americans have been seeking through elections, letter, phone calls, petitions and postcards for some time.

True Blue Patriots, P. O. Box 62404, Cincinnati, OH 45262-0404

Phone (513) 777-8120 Fax (513) 777-8140

(1) Federal, state and local taxes plus federal regulation are taking half of the nation's income and government wants more. In fact, government has wanted more so much that elected officials have been willing to lie to us to get more. They have told us that they were paying off the nation's debt, when in fact each and every American owes $19,000 of America's debt In 1995, Cost of Government Day - the day taxpayers finish working to pay taxes and regulation costs - was July 9! In a land of economic freedom, this is a contemptible burden!

(2) Federal regulations consume billions of hours of every working American, and instead of creating more safety for employees and consumers, have a destructive impact on creativity, job growth, and the courage to begin a new enterprise. One of True Blue's members over paid his workers $51,000 in overtime earnings and deducted $3,000 in hours when employees did not meet an 80 hour quota of work for a two week flex time schedule. The Department of Labor shut this man down, costing him his business and home, in addition to ending the jobs of every middle aged professional in the firm because Department of Labor regulations cannot grasp that overpaying workers by $48,000 more than compensates for docking $3,000 of unearned pay! That case is still before the courts and the Department of Labor continues to seek one postponement after another to keep their shenanigans in the dark!

Environmental regulations alone cost every American family over $1,000 each year. In 1992, pollution control regulations cost $131 billion - a huge number. Broken down to job dollars, that was $14,700 for every American unemployed at the time!
As much as 80% of all inflation is attributable to federal, state, and local government regulations.

True Blue Patriots, P. O. Box 62404, Cincinnati, OH 45262-0404
Phone (513) 777-8120 Fax (513) 777-8140

(3) Just last week, a group of taxpayers tried to visit the newly leased federal bankruptcy court facilities in downtown Cincinnati. At first, we were denied admission on the grounds of "security " The marshal subsequently told us that the denial was improper, but the court's bureaucracy required that I and my middle aged friends and senior citizens be lead on a tour of the hallways, the 3 spacious marble and walnut lined courtrooms with ceilings reworked from 9' to 13' for the sake of esthetics, and view only the doorways into attorney/client rooms. Three fourths of the $25 per square foot office space was off limits to us. Fewer than 40 employees occupy space leased to fit a staff of near 100. There are 3 courtrooms because the 2 judges whose caseload has been decreasing hope to add a third judge and, of course, there are rooms for juries -- not that juries have ever been used in a bankruptcy trial in Cincinnati.

(4) My fourth example comes from Carol M. Browner of the EPA whose memo to all EPA employees I hold in my hand. Ms. Browner begins, "The House Subcommittee on Appropriations for VA, HUD, and Independent Agencies has reduced EPA's FY 1996 Budget by 34%. This proposal is in direct conflict to the interests of the American people." It doesn't seem to occur to Ms. Browner that Americans place a higher value on their homes and families than on roadside ruts defined as wetlands and that protecting one's home from a Southern California fire is an essential right, even if a mouse or bug is threatened by protecting one's family!

Ms. Browner states in the final paragraph, "I am committed to protecting the EPA work force as much as I possibly can." We the taxpayers are not willing to continue watching forced contribution of our earnings to maintain inefficient, cumbersome bureaucracies and to allow Ms. Browner to protect the EPA work force!

True Blue Patriots, P. O. Box 62404, Cincinnati, OH 45262-0404
Phone (513) 777-8120 Fax (513) 777-8140

I could continue for some time with the facts facing us; but you know what has happened, how hard we worked, and how much we thought we had achieved when we watched the November 8 election results. We had sent a clear, and we thought loud, message to elected representatives that the type of red ink spending, pork producing, freedom destroying government growth that had continued for several decades was totally unacceptable to the mainstream, middle class backbone of America.

I have never liked prejudice in any form - whether it was, as during the 60's, an issue of skin color, or provincial prejudice concerning one Christian denomination or another, or belief that all attorneys are charlatans, all doctors are quacks, or that all elected representatives are crooks and cheats. I have met and worked with numerous elected officials in the last 2 years; some of them are deeply concerned because they also see their families' freedoms being destroyed. In the 1994 election, we really thought we had communicated a message of smaller government, lower taxes, reduction of waste and a demand for greater integrity.

I grew up in Louisiana where there are swamps. Swamp water doesn't move much, so all kinds of ugly things grow and the odor isn't too great either. We've had three decades of government backing up like swamp water - spending and more spending, bureaucracies and more bureaucracies. The effect of the last election was to open a drain, but there are people trying to plug the hole with all their might. While taxpayers have some supporters, there are still those who are addicted to spending our earnings, others addicted to accepting our earnings as "gifts" or "entitlements," and others who receive paychecks for making the exchange of our earnings into entitlements.

True Blue Patriots, P. O. Box 62404, Cincinnati, OH 45262-0404
Phone (513) 777-8120 Fax (513) 777-8140

Will you help us to keep the drain open? America shouldn't become a dark, gray, stinky swampland. Currently, government in the United States employees 1.6 million people. Manufacturing employees 1.1 million -- there are 500,000 more people writing regulations, creating bureaucracies and protecting bureaucrats, and designing legislation than there are people manufacturing every item made in the U.S. Release the poor bureaucrats from that stifling, creativity deadening world of writing and enforcing rules and regulations and allow them to return to careers which promote creativity, freedom and individual achievement. Believe me, at election time the American taxpayer will remember which choice you make, whether to retain the stifling, swamp-like bureaucracy of federal government or create a cleansing waterfall of economic freedom released to the American economy.

True Blue Patriots, P. O. Box 62404, Cincinnati, OH 45262-0404
Phone (513) 777-8120 Fax (513) 777-8140

Mr. SCHIFF. We have now, I regret to say, run out of time for further oral testimony. But I am informed that for those of you who were on the list to speak, if you do have anything in writing, we will collect it and we will make it a permanent part of the record.

Before closing the hearing, I would like to, on behalf of Chairman Clinger and the Government Reform and Oversight Committee, thank Mayor Paul Cassidy of Parma Heights for being such a gracious host. I would also like to thank Joe Tal, Rich Moore and others here at Greenbrier Theatre for their hard work in preparing for our visit today. Finally, let me thank all of our witnesses and all of the people of northeastern Ohio for participating in this hearing.

The most important thing we can do is maintain an open dialog between Congress and the American people. And this hearing has been a welcome step in that process. I appreciate all of the participants and I appreciate all of you in the audience, whether you participated or did not, for being here and listening with us, because this is the first of what will be many hearings over the next number of months.

With that, the committee hearing is concluded. [Applause.]

[Whereupon, at 3:33 p.m., the committee was adjourned.]

[Additional information submitted for the record follows:]

Please Enter This Into The Record For The Committee Of Government Reform And Oversight Committee

Testimony Of Trox Light

Mr. Trox Light
7961 Bellflower
Mentor, OH 44060

(216) 255-5335
Precinct 3G
July 14, 1995

Congressman Steve LaTourette
U. S. House of Representatives
Washington, DC

Dear Honorable Representative LaTourette:

I was informed about your forum on cutting government waste through the Christian Coalition and the Heritage Republican Club. I would have loved to attend, unfortunately, I will be in Pittsburgh at the time of your meeting. I would hope that I could respond in writing as to my views. Many of these may not be unique but have my support.

1. Eliminate all government funding of abortion and abortion clinics.
2. Eliminate welfare support for those under 18 who are not married and have children. They should live with their parents who should also support their grandchild.
3. Eliminate providing condoms in public schools.
4. Eliminate government funding of public television.
5. Eliminate any funds to the National Endowment for the Arts.
6. Eliminate Federal Government involvement in education and pass on to the states. Promote school vouchers. Encourage private specialty schools to provide customized appropriate education, allowing each child to be the "best" they can be.
7. Consolidate job training programs and reshape to have business provide co-op programs or provide direction to the training to concentrate on those skills needed in the private sector.
8. Deport criminals who are illegal aliens and get them out of our prisons.
9. Eliminate any government support for illegal aliens.
10. Eliminate any funding for groups such as: Planned Parenthood, National Education Association, etc.
11. Privatize the Federal Post Office.
12. Set up medical saving accounts to encourage Medicare and Medicaid recipients to not use the Emergency Room for primary care; shop around for the best medical care value, etc.
13. Privatize Social Security which would provide a variety of investment options; such as, annuities, mutual funds, interest accumulation, etc.
14. Reduce medial malpractice litigation to reduce Medicare and Medicaid cost.
15. Eliminate "Goals 2000".
16. Eliminate government support subsidies; such as, land bank program, natural resource depletion allowance, etc.
17. Reduce IRS by institution of a flat tax or National Sales tax. Avoid any steep progressivity.
18. Reduce funding for AIDS research.
19. Require work for welfare support.

Sincerely yours,

Trox Light

Trox W. Light

Mr.Chairman, members of the committee. Thank you for this opportunity to share with you my views on government. My family had just returned from a whirl wind vacation on the east coast traveling from Jamestown, VA to Plymouth, Mass. when we learned of this hearing. It was a wonderful experience to travel through 9 of the original 13 colonies. Our hearts were stirred as we saw where many of our fore fathers lived, and fought many of the battles that bought and preserved our country. But I fear that much of what they fought for is in jeopardy. The trend in the history text books and media today is to promote the notion that this nation is a democracy, and not a republic. In the Federalist Papers #14 the terms were clearly defined, James Madison writes "In a democracy, the people meet and exercise the government in person, in a republic they assemble and administer it by their representatives and agents."

Our founders recognized that "we are endowed by our Creator with certain unalienable rights, that among these are life, liberty and the pursuit of happiness." The men at the Constitutional Convention of 1787 had seen what a government without constraints could do to the people, in fact 11 years earlier the Declaration of Independence listed the offenses of England against the colonists. Determined to not be subject to a tyrannical government again they created a system of checks and balances to control, not the people, but the government. The end result was the United States Constitution. In the 1st Amendment it states "Congress shall make no law respecting an establishment of religion or prohibiting the free exercise thereof." This is a clear example of limitations being put on the government, not on the people. Unfortunately, the right to freedom of religion has become freedom from religion. Our freedoms are also hindered in the area of business and industry by a myriad of laws. My husband works for a chemical company in their product safety and hazard communication department. He owes his livelihood to the vast number of rules and regulations that his company must follow. While we appreciate the job security, the regulations have grown to such a point that they have become oppressive in nature, we may own our businesses but government clearly controls them.

The United States Constitution, in Article 1 section 8 clearly defines what our government has jurisdiction over. And according to the 10th Amendment "The powers not delegated to the United States by the Constitution, nor prohibited by it to the States, are reserved to the States respectively, or to the people." While I recognize that government agencies are well meaning the proper place for any matter not specified in the Constitution is with the states. When we allow a federal government to grow as it has, the people become oppressed by increasing laws and regulations. Liberty as defined by Webster is "the state of being free, the power to do as one pleases." Patrick Henry said "Give me liberty or give me death." Ladies and Gentlemen if we do not reduce the size of the federal government, and return powers back to the states and the people therein we shall surely die as a nation.

Thank you again for your time and attention.

Florence R. McKinley
6787 Smith Rd.
Middleburg Hts., OH 44130

Defund Legal Services Corporation

I am Donna Kromer. After hearing the highly esteemed LTV and Society Bank executives and others testify here today, I feel impressed upon to tell that while I am not an executive in a corporation of stockholders, I have critics and employees I can't fire. I think that makes my job different, and every bit as challenging and laudable. I have been married successfully for thirty-three years and have raised two children to adulthood without their ever have being involved in any serious trouble like taking drugs or abusing alcohol by getting DUI's, etc. I heard the politicians and business executives here today testify of their making their institutions work on less. Well, I have made my family institution—my business—work on less and less because government takes more and more from me and my husband every year in taxes. While government has grown, I have had to cut back, all the while still keeping the same nutritional content of the meals I prepare. I have learned how to live in the same house, cutting back on many things because my real estate taxes have gone up and up. I am a dedicated, full-time house executive. I am the *"Vice-President"* of *"Mr. & Mrs. Kromer & Kromer Family Associates, Inc."* And in addition to being successful at my position, I still have managed to maintain a sense of humor! Now having said that, I would like to thank the honorable members of this Committee for coming to our district first. Now we have two firsts, the Cleveland Indians and this Committee.

Rep. John Kasich's budget phases out funding for Legal Services Corporation [LSC] by 1999. By 1998, LSC is to receive only five per-cent [5%] of its current funds—just enough to close it down. The appropriated funding for LSC for fiscal year 1995 is $415 million, projected for 1996, $435 million.

Senator Phil Gramm said, "It's hard to justify appropriating anything for an agency with a history of political involvement 'at the taxpayers' expense."

Since 1974, LSC has received more than $5 billion from the federal government. Howard Phillips, the head of the Office of Economic Opportunity under Nixon, had jurisdiction over LSC, said, "If you look at the actual budget numbers, the increases in welfare spending . . . in immigration services, and many other things directly related LSC's activism, it adds up to something like $2 trillion added to the national debt."

LSC has been corrupted by over 30 years without oversight or enforcement. That has made it impossible to ensure that poor people are receiving any meaningful assistance. LSC works against attempts to control welfare spending and encourages people to stay on welfare.

Western Massachusetts Legal Services used taxpayer dollars to print a brochure to publicly advise welfare recipients who win the lottery to "spend the money fast to stay on public assistance" or to "prepay rent so they can use the welfare money to buy a special gift or take a vacation." A 47-year old Springfield welfare recipient who won $75,000 in the lottery wasn't able to hide the money, so a suit on his behalf was initiated — even though he admitted he spend most on "drugs and gambling".

In 1993, the Clinton Board suspended LSC monitoring entirely, making financial accountability nonexistent.

LSC has pillaged the nation's welfare system, costing American taxpayers billions of dollars in unnecessary welfare benefits. LSC lawyers battled to prohibit states from establishing residency requirements for welfare in *Shapiro* v. *Thompson* (1969), and denied states the right to cut off welfare benefits to aliens in *Graham* v. *Richardson* (1971).

LSC has torpedoed welfare reform. For example:

- A class action suit was filed by LSC, along with the National Organization for Women [NOW] and the American Civil Liberties Union [ACLU], to block New Jersey's law capping cash payments to mothers having additional children while on welfare.
- The Legal Aid Society of Central Texas filed suit in 1994 to force public housing officials to rent apartments to minors. This left the landlords in the position of renting to tenants against whom they could not enforce leases and allowed these *children* to collect welfare benefits as head of their household.
- In 1995, Northside Tenants Reorganization in Pittsburgh attempted to remove a drug dealer, but Neighborhood Legal Services fought to keep the criminal in residence, and won. Not only has

Defund Legal Services Corporation

Neighborhood Legal Services driven property values down in a neighborhood of poor people, but has made it more dangerous.

- In *Jones* v. *Shalala* (1993), Legal Assistance Foundation of Chicago sued to obtain SSI benefits for a 44-year-old man they alleged was disabled due to alcohol and opium dependence and an antisocial personality disorder. Despite the fact their client admitted to stealing $60 a day to support his habits, Legal Assistance Foundation argued he was not capable of working.
- LSC is responsible for the cushy lifestyles of prison inmates, who are now "entitled" to such amenities as cable television and much more. Communities concerned about protecting their children from sexual deviants are losing out to LSC lawyers who are successfully keeping criminal records from us. In a disturbing case from Pennsylvania, LSC represented a convicted rapist in his suit for custody of the child he fathered by the rape of a 13 year-old girl.

Supporters of Proposition 187 are in confrontation with the National Immigration Law Center that is advising organizations nationwide on the representation of illegal immigrants.

Supporters of LSC claim zeroing out federal funding would leave the poor, especially women and children, helpless and without access to the legal system.

There is ample evidence to the contrary. If LSC were defunded tomorrow, resources would be available to help the poor. Legal Services programs would still receive hundreds of millions of dollars from state and local governments as well as private sources. Many LSC programs engage in fee-for-service work under the Equal Access to Justice Act and other Acts.

There are also hundreds of legal services programs already in existence but not funded by LSC, listed in the directory of the National Legal Aid and Defenders Association. Pro-bono programs and resources of legal defense funds will continue to support legal services. The poor have access to justice that most members of the middle class cannot afford and even the wealthy might deem too costly.

LSC has kept farmers from farming, has given aid to leftist guerrilla groups like the Sandinistas, and has pandered to illegal aliens. When poor families are in crisis, LSC opposes mediation, an important way of resolving domestic disputes. LSC advocates cash settlements should be avoided so that the mother can be eligible for welfare and discourages visitation from fathers.

Therefore, I urge this honorable committee, defund LSC, do not attempt to reform it. It is beyond redemption.

Thomas Jefferson said, "To compel a man to furnish contributions of money for the propagation of opinions which he disbelieves is sinful and tyrannical."

CREATING A 21ST CENTURY GOVERNMENT

SATURDAY, SEPTEMBER 9, 1995

HOUSE OF REPRESENTATIVES,
COMMITTEE ON GOVERNMENT REFORM AND OVERSIGHT,
Upper Montclair, NJ.

The committee met, pursuant to notice, at 10:06 a.m., at Montclair State University, Student Center Ballroom, Valley Road and Normal Avenue, Upper Montclair, NJ, Hon. William F. Clinger, Jr., (chairman of the committee) presiding.

Present: Representatives Clinger, Tate, Martini, Schiff, Horn, and Davis.

Also present: Representative Zimmer.

Staff present: Kristine Simmons, Monty Tripp, and Wallace Hsueh, professional staff members; Judith McCoy, chief clerk; and Cheri Tillett, assistant chief clerk/calendar clerk.

Mr. CLINGER. I want to thank all of you for attending this meeting of the Government Reform and Oversight Committee, which is the second field hearing on "Creating a 21st Century Government."

I also want to take the opportunity, before we hear from our first panel of witnesses, to thank a very distinguished member of this committee and this area's Representative in the House, Congressman Bill Martini, for hosting this committee today.

I also want to thank Montclair State University for the very warm welcome which we received this morning and for making the Student Center Ballroom available for our use.

The purpose of our field hearings is to learn from distinguished witnesses—and our panel this morning is, indeed, very distinguished—who have direct experience in creating more efficient and responsive business and government organizations.

We hope that the insights learned from their success stories will help us meet our own challenge to create a Federal Government that is streamlined, innovative, responsive, and better able to lead us into the next century.

The Committee on Government Reform and Oversight wants to do more than just talk about the need to downsize. We want to act on restructuring Federal agencies and departments to provide the results the American people expect and demand.

We are prepared to ask the difficult questions which confront the private sector on a daily basis: Does our organization meet the needs of our customers, our customers being the American people, and can we effectively produce to the level of their demand?

Our Federal Government agencies have grown unchecked for far too long. The time for change is now. No longer will Federal de-

partments and agencies expand in size and scope while the quality of Government service suffers.

Taxpayers demand efficient services for their contributions to these agencies, and we are pledged to smart-sizing the Federal Government to make the service delivery system meet the needs and expectations of every American citizen.

Americans, I think, are painfully aware of the bureaucratic red tape that we encounter when using the services of many of our Federal institutions. Everybody, sooner or later, has a problem with the Federal Government.

The Federal Government today is nearly six times—six times—the size it was in 1930, and this growing spiral continues to this day.

In fact, statistics show that, in fiscal year 1994, the Federal Government spent $203 billion—$203 billion more than it took in. That's equivalent to $797 for every man, woman, and child in the United States.

This overspending and growth must be stopped if we want our Federal Government to provide successfully for future generations of Americans.

Our task as lawmakers is to create smart legislation that will focus the Federal Government on those essential functions that must be performed well on the national level.

The fact is that many components of our Federal agencies can be more efficiently and much more cost-effectively administered through State and local government or private-sector means.

This involves knocking down the walls of our inefficient bureaucracy and building a government that performs only—only those functions which create meaningful and needed results.

The witnesses that are appearing before us today have already met the challenge of preparing their organizations for the future, and we hope to learn from their experiences in creating our own 21st century government.

Through the contribution of these experts and the comments we receive from the people of New Jersey, we hope to learn how innovation and a vision for the future can lead to a government that reflects the needs of its citizens.

With that, allow me again to thank our witnesses, our audience, and my colleagues who have taken the time to attend this hearing and listen to what our witnesses and the people of New Jersey have to say, and at the outset, I want to recognize our host this morning, the very distinguished gentleman from New Jersey, Congressman Martini, for any opening statement that he would wish to make.

Congressman Martini.

[The prepared statement of Hon. William F. Clinger, Jr. follows:]

STATEMENT OF THE
HONORABLE WILLIAM F. CLINGER, Jr.
CHAIRMAN
HOUSE COMMITTEE ON GOVERNMENT REFORM
AND OVERSIGHT
Hearing on "Creating a 21st Century Government"
Upper Montclair, New Jersey
September 9, 1995

Good morning, and thank you for attending the Committee on Government Reform and Oversight's second field hearing on "Creating a 21st Century Government". I would like to take the opportunity, before we hear from our first panel of witnesses, to thank a distinguished Member of this Committee and this area's representative in the House, Congressman Bill Martini, for hosting the Committee today. I would also like to thank Montclair State University for the warm welcome and for making the Student Center Ballroom available to us this morning.

The purpose of our field hearings is to learn from distinguished witnesses who have direct experience in creating more efficient and responsive business and government organizations. We hope the insights learned from their success stories will help us meet our own challenge to create a federal government that is streamlined, innovative, responsive, and better able to lead us into the next century.

The Committee on Government Reform and Oversight wants to do more than talk about the need to downsize; we want to ACT on restructuring federal agencies and departments to provide the results the American people expect. We are prepared to ask the difficult questions which confront the private sector daily Does our organization meet the needs of our customers and can we effectively produce to the level of their demand?

Our federal government agencies have grown unchecked for far too long. The time for change is NOW: no longer will federal departments and agencies expand in size and scope while the quality of government service suffers. Taxpayers demand efficient service for their contributions to these agencies and we are pledged to "smart-sizing" the federal government to make their service delivery systems meet the needs and expectations of every American citizen.

Americans are painfully aware of the bureaucratic red tape that we encounter when using the services of many of our federal institutions. The federal government today is nearly SIX TIMES the size it was in 1930 and this growing spiral continues today. In fact, statistics show that in fiscal year 1994 the federal government spent $203 billion more than it took in - equivalent to $797 for every man, woman, and child in the United States. This over-spending and growth must be stopped if we want our federal government to provide successfully for future generations of Americans.

Our task as lawmakers is to create smart legislation that will focus the federal government

continued

on those essential functions that must be performed well on a national level. The fact is that many components of our federal agencies can be more efficiently and cost-effectively administered through state and local governments or private-sector means. This involves knocking down the walls of the inefficient bureaucracy and building a government that performs only those functions which create meaningful and needed results.

The witnesses appearing before us today have already met the challenge of preparing their organizations for the future, and we hope to learn from their experiences in creating our own 21st Century Government. Through the contribution of these experts and the comments we receive from the people of New Jersey, we hope to learn how innovation and a vision for the future can lead to a government that reflects the needs of its citizens.

With that, allow me again to thank our witnesses, our audience, and my colleagues who have taken the time to attend this hearing and listen to what our witnesses and the people of New Jersey have to say.

I would now like to recognize Congressman Martini for an opening statement.

Mr. MARTINI. Thank you very much, Mr. Chairman.

Mr. Chairman, I'd just like to take this opportunity to first welcome you to the great State of New Jersey and my fellow colleagues on the Government Reform and Oversight Committee and, in particular, the Eighth Congressional District for this very important meeting this afternoon.

As most of us know by now, the 104th Congress has clearly demonstrated a commitment to fiscal responsibility. This fall in Congress, I am confident that we will make a down-payment on America's future.

For the first time in two decades, the House and Senate are poised and ready to pass a balanced budget and to begin the process of bringing fiscal responsibility to the Federal Government.

In passing a balanced budget, we will be turning a corner, a new corner, in our Nation's history. With that, some will be satisfied with that accomplishment.

I would argue that this budget provides only a good foundation for a structure that this committee still has the task to build to assure fiscal responsibility for years and even generations to come.

Some individuals argue that this budget is based on the principles of reduction, downsizing, and elimination of it. I would argue that this is too simplistic an approach to a much bigger task.

It is true that there are instances in this Federal budget in which programs will be reduced, downsized, and even eliminated, but in those instances, it will be agencies and departments that have long outlived their usefulness.

There is even a bigger question, and that is what the function and role of our Federal Government will be as we enter the 21st century?

The purpose, then, of this hearing is to begin a dialog with the American people on what steps are necessary to bring about a 21st century Federal Government.

Basic questions about the functions of Government must be asked. There are mandatory functions, of course, that it must perform. However, when it comes to other discretionary functions, we need to take a fresh look at whether or how to perform that.

Today, we continue a dialog which we started in Ohio to reappraise the roles, goals, and priorities of the Federal Government.

The committee has come here to northern New Jersey and gone elsewhere throughout this great Nation because something has, in fact, been lost in Washington. It is, in my opinion, the ability to see beyond the beltway.

I have only had the privilege of serving this congressional district for 8 months, but what became abundantly clear as I began my tenure on Capitol Hill in January of this year is that no one had previously questioned the status quo.

For example, no one was questioning the effectiveness of present programs before adding yet another program to the roles of the Federal Government. No one stopped and asked which programs work, which don't, or which should be eliminated. Instead, all too often, Congress simply created a new program without eliminating the first, creating only another confusing level of bureaucracy.

As a result, Congress created dozens of programs duplicating each other, with many not fulfilling their intended goals or pur-

poses. This committee, therefore, has been given the task under the able leadership of Chairman Bill Clinger to seek out and recommend new solutions.

Local officials and business executives understand the challenges and the obstacles that they face in undertaking a similar task in reinventing their respective organizations. It is this committee's duty today to listen, learn, and lead this Federal Government into the 21st century.

We need to establish a doctrine for Congress to follow, and then, once we establish this doctrine, we need every day and every session of Congress to continue to work toward achieving our mission.

In these first 2 years, we have and we will continue to take large steps, but there will still be a great distance to travel. Our task is an ongoing mission, a mission based on making the Federal Government smaller, smarter, and less costly and yet deliver necessary services effectively.

In less than 5 years, we will enter a new millennium. As we approach this milestone, we need to review the advances that have been made in the last century.

In an era of faxes, automation, and high-speed computers that have revolutionized the way the world works, we also in government must integrate this technology into government's process and functions.

Here in New Jersey, I am proud to say that our government, Governor Christine Todd Whitman, has already embarked on this mission, the mission of reinventing the way the State government will need to operate in the next century. Well before Congress began to act, she began to bring the kinds of innovations to New Jersey government that have enabled her to implement the bold and effective changes that have breathed the new fresh air into our life here in New Jersey.

I am also proud to say that New Jersey businesses are leading the way in the private sector, creating high-paying, high-technology jobs for our citizens with next-century technologies.

In fact, many of today's witnesses have been personally involved in very successful reform efforts.

We must listen, learn, and meet the challenges and obstacles and hear the success stories that these witnesses will relate to us this afternoon.

The people of the State of New Jersey, particularly the Eighth Congressional District, are, in my opinion, very fortunate to have this opportunity today to be a vital part of helping to create this new mission statement for our Federal Government.

Before I yield my time, I want to, once again, thank my colleagues for taking this time out of their weekend to be here in New Jersey, and all of the individuals who will be presenting testimony this morning and, of course, the audience members and others who are here today to help us in this mission. I would also like to thank, of course, the Montclair State University administration and leaders for providing us with these facilities today and their warm and hospitable reception. I look forward to hearing our witnesses and learning more today about this very important task, and I yield back the balance of my time.

Mr. CLINGER. Thank you very much, Congressman Martini.

I would like to introduce the other members of the panel that are here in New Jersey today, and ask if any of them have any statements that they would like to make before we call our first panel of witnesses. To my immediate left is Congressman Steve Schiff from the State of New Mexico, who is the vice-chairman of the Government Reform and Oversight Committee, and to his left is Congressman Steve Horn from the State of California, who is the chairman of a very important subcommittee under the Government Reform and Oversight Committee on Government Management, Information, and Technology so he has a very vital interest in the subject of these hearings today. To his left is Congressman Tom Davis, a very vital member of our committee and chairman of the Subcommittee on the District of Columbia, dealing with the problems that the District is dealing with, and to his left is a former Member, an alumnus, I guess you might say, of the former Government Operations Committee, now Government Reform and Oversight Committee, Congressman Zimmer, and we are delighted to have him join the panel today.

To my right, beyond Congressman Martini, is Congressman Randy Tate, a freshman Member but a very, very involved and effective Member from the State of Washington, the Seattle area. So, we have very broad geographic diversity within the panel here.

As I have indicated, this is the second of six regional hearings planned across the country talking about this very vital issue of government reform, downsizing, and efficiency.

We will hold hearings next month out on the west coast and, later on, in the south. We may hold hearings beyond that.

So, we are delighted to be here, and at this point, I would like to ask our first panel to come to the podium. While they are coming, I would refer to any of my colleagues who would like to comment.

Mr. Tate.

Mr. TATE. I, too, would like to thank the chairman and Congressman Martini, who I have had the pleasure to get to know as a fellow freshman going through the rigors of being a new Member of Congress.

We heard a clear message, and we have heard it around the country, that the government was too big and that it needed to change, and that is what we have been embarked on over the last several months. I will keep my comments short, because what we want to do is hear from you folks, and I guess I do not want to break any news to anybody, but all wisdom does not reside in Washington, DC. It resides out there in the real world with real people who are out there in the trenches every day solving problems and coming up with solutions, and that is why I think it is so important for us to leave the beltway to go out and talk to real people, local elected officials that are dealing with the types of problems that we are facing today in the U.S. Congress, and that is why I think it is so important for us to get out and hear what you have to say, and so, with that, Mr. Chairman, I would like to yield back the rest of my time.

Mr. CLINGER. Thank you very much.

Congressman Zimmer.

Mr. ZIMMER. Mr. Chairman, I want to thank you for allowing me to sit in with my former committee, and I want to commend you for having this hearing in the district of our outstanding colleague, Bill Martini.

In 1994, the voters clearly stated that they did not want more of the same from the Federal Government, but I do not think they asked for less of the same either.

Our challenge is to transform the nature of government, to change the way we do business and to take a fresh look at our operations, and Washington has not been very good at accomplishing this sort of thing. As Mr. Tate said, the State and local units of government have transformed themselves, in some instances, in a way that can be an inspiration and a model for us at the Federal level, and of course, the private sector has led the way in the last couple of decades in making the painful adjustments to be competitive in a global economy.

So, that is why this hearing is so important. That is why I am delighted to be part of it, because the specific elected officials and private-industry leaders who will talk to us have gone through some very difficult problems and are still dealing with those problems in a very competent and imaginative and innovative way.

We can learn a lot, and we can change the Federal Government by modeling what we do after what New Jersey has done.

At the State level, the State of New Jersey has learned how to do more with less, has proved that it is possible to reduce taxes and spending and still maintain the quality of service that the people deserve, and great new local leaders like Mayor Schundler and Jim Treffinger have taken on some very difficult circumstances and have proved the same thing at their level of government.

So, I am delighted to be here so we can share their wisdom and actually turn this into action.

Thank you very much.

Mr. CLINGER. We are now prepared to begin our hearing.

Let me just say at the outset, we do have an extensive list of witnesses that we are going to be hearing from this morning and this afternoon, and we have some time limitations on some of the members of the panel who have to catch planes to go elsewhere.

So, we do have a rule in the committee that we try and limit the formal presentations to 5 minutes, if that is possible. We will have all of the written testimony, and without objection, all of the written testimony will be a part of the full record.

So, to the extent possible, we would ask you, if you could, to limit your presentations to the 5 minutes.

I want to welcome our first very distinguished panel of witnesses on local government, because this is really—you know, in this effort that we are engaged in, we are really talking about trying to redefine the Federal-State-local relationship, which many of us think has become too much skewed to the Federal level.

It is no longer a partnership; it is sort of a parent-ward relationship, and that is not what was intended, I think, by the founders, and that is what we are trying to address.

Mayor Bret Schundler has had a distinguished public and private career and, in his capacity as mayor of Jersey City, has championed the cause of reducing crime and improving the educational

system and lowering taxes, and we are delighted to have you with us, Mayor.

County Executive Jim Treffinger has been in his current position only since January, but he is no stranger to government service, having served in the past as mayor, deputy mayor, and council member for the Township of Verona, and again, we welcome you, Mayor, to the panel.

Mayor Pascrell of Paterson is a life-long resident of that very distinguished city. In addition to various past positions in city government, Mayor Pascrell was a teacher for 12 years and served as president of the Paterson Board of Education.

So, welcome to you all.

We have a custom in this committee, because it is an oversight committee, of swearing all of our witnesses, and if you would not mind taking the oath, just raise your hand at your desk and we would just ask you if that would be acceptable.

[Witnesses sworn.]

Mr. CLINGER. Thank you very much.

I guess we would lead off with Mayor Schundler, if you would, please.

STATEMENTS OF BRET SCHUNDLER, MAYOR, CITY OF JERSEY CITY; JAMES W. TREFFINGER, COUNTY EXECUTIVE, ESSEX COUNTY; WILLIAM J. PASCRELL, JR., MAYOR, CITY OF PATERSON

Mayor SCHUNDLER. It is a great pleasure to have you here, and I do want to commend you for leaving Washington to come to the rest of America, which begins in New Jersey.

I do have brief written testimony, with some articles that expand on some of the policy ideas I will lay out here, but I think the issue you are dealing with, which is the proper role and structure of government and at what level of government various kinds of authorities should be vested, is the key issue of our time.

I personally believe that it is impossible for central government to truly be effective for two reasons—I should say be effective across a broad range of issues—for two reasons.

The first is because of the inevitable impact of political consideration.

All of us, whether we are mayors or State legislators or Congress-people or, for that matter, the President, as elected officials, are concerned with staying in office, which means that we are subject to the influence of those who are politically powerful, which means that sometimes the decisions we make are not 100-percent solely a function of a disinterested view on what might be good policy.

There does get to be a certain amount of political calculus that gets involved.

A second problem is that central government is not necessarily always competent to deal with every issue. I can readily say that, as the mayor, I do not think I have the ability to judge what is the best response to help educate every child in every classroom in Jersey City.

So, I really do not think I should have the power. I do not think I should be dictating what gets done. I think it makes a lot more

sense to devolve that authority to the teacher actually in the classroom working with the child.

So, we have an issue where sometimes government which is distant is not competent and sometimes government which is distant is just not necessarily 100-percent having the same interest as the people that we say we want to serve.

Sometimes we as human beings having political interests that interfere with the best decision being made.

The solution is to try to devolve power as closely as humanly possible to the individual American citizen, and I think there are issues where we can do that in a very, very efficient and easy way.

For instance, when it comes to essentials of individual opportunity, like education, there is no reason in the world why, at the Federal or State or, for that matter, even at the city level, we should be dictating how a given child gets educated.

We should allow parents to have the right to look for the best possible education for their child. If it is an essential of individual opportunity and we say we care about opportunity for each of those individuals, we should give them the power to do what is best for themselves.

You can say the same about housing when we talk about housing vouchers. Why build a big government housing project and say to the poor that you must live here even if there is better housing available for less money?

It makes more sense to empower the individual that we say we want to help to be able to get what is best for themselves and their families.

Not all government services take the nature of being elements of individual opportunity. There are things which are effectively communal in nature, like for instance making sure that a neighborhood is safe.

You cannot have police vouchers, but you can keep power very close to that local neighborhood, and we see examples of that in our business improvement districts and our neighborhood improvement districts, where they have brought on private security guards under private management that can be hired or fired by the local neighborhood.

You can see an example of this, I might add, at any condominium association, where the people in the condominium association pay specific management fees so that they can hire a company that they can also fire if it does not do various supplemental public services like gardening well, like maintaining the common spaces well.

Well, we see examples now, again, in business improvement districts all across America of crime ratcheting downwards, because in addition to have the city police services, they also have directly accountable, very locally controlled safety supplementary services being provided by private management companies that have to compete for the right to provide those services.

I do not know how many of you have seen this month's policy review by the Heritage Foundation, but they have an article called Safety Inc., which I would commend to you which expands significantly on the business improvement districts in New York, where you might not be aware, but for instance, in the Grand Central

Station area, crime is down 87 percent since the implementation of a business improvement district there. And I would argue that, if you look at New York's crime in general, it is dramatically lower than it was 10 years ago, and I do not think the reason is because of a new administration there, per se. I think Police Commissioner Batton is doing a fine job, and I think Mayor Gulianni is doing a fine job, but I think the real dramatic impact has come from the growth in neighborhood-based security being provided through the business improvement districts.

Bryant Park, which was the most drug-infested park in New York City—happens to be located right outside the public library—used to be a place where no one would go. They have not had a crime there in 2 years, because the business improvement district has been put in place.

Government works with the private sector in this regard by giving the local community the taxing power to effectively levy a little bit of a self-assessment that they control directly, and then they hire that private management company to provide the supplementary services.

That still leaves something for the Federal Government to do. Now, we can talk about the appropriate level of services at the city level, at the State level, but there are still things for the Federal Government to do, and let me close my comments, just expand on a few of those.

Obviously, if you do not provide for the national defense, none of us will be able to maintain our freedom.

If you do not make sure that civil rights are a reality everywhere in America, then we are not living up to our requirement to provide every American their constitutional freedoms, and I might add, you should also be defending economic freedom.

Just as every American should enjoy religious liberty and political freedom and equal rights, we should also be able to enjoy economic rights, which is one reason why I asked all of you in the House not to pass flow control legislation, which would begin to give the States the ability to interfere with interstate commerce, which is directly enunciated in the Constitution of the United States as being something that we should not have.

We should have free commerce across the entire United States, economic freedom to do what is best for ourselves and our communities.

Thank you very much.

[The prepared statement of Mr. Schundler follows:]

TESTIMONY BY THE HONORABLE

BRET SCHUNDLER

MAYOR OF JERSEY CITY

Delievered to the U. S. House of Representatives Committee on Government Reform and Oversight

---

September 9, 1995

I want to commend you for taking up the question of the proper role and structure of government. It is the key public policy issue of our time.

And I also want to thank you for leaving Washington, and coming here, to listen to the people.

For the past sixty years, many Americans have flirted with democratic socialism. We have never believed in the divine right of kings or the benevolence of dictators. But for the better part of this century, many of us have believed that a strong, central government -- with the power to control natural resources, and industrial capital, and to redistribute wealth -- could be a great force for good, if it was properly controlled by the people through democratic elections.

I don't think the people of America believe this anymore. What I hear people saying, in fact, convinces me that most Americans now reject strong central control.

We have too often seen our democratically elected leaders use the power we have given them to advance their own interests, or those of the politically powerful, at our expense.

And we are reminded of the wisdom of our founding fathers, who noted that given the fallen nature of Man, power over others tends to corrupt, and absolute power to corrupt absolutely.

Please don't misunderstand me. I do not believe that the people of America are anti-government. But I do believe the people of America increasingly are pro-<u>limiting</u> government.

In the state of nature, the powerful oppress the weak -- so we know that government is necessary to ensure freedom and justice.

But government today has become so powerful a force in itself, so remote, and so frequently insensitive to our needs, that government itself, we are sad to see, frequently oppresses the weak.

The time has come for change.

What I believe the people of America want their government to do, instead of accruing power to itself, is to empower we, the people.

We don't want government to give us things. In fact, we don't trust you to have the power it takes to give us things, since everything you give to us, you first must take from us.

But we do want you to ensure us the opportunity to earn for ourselves the things that we need.

In short, it is not entitlement that we seek.

It is empowerment!

Mr. CLINGER. Thank you very much, Mayor, for a very stimulating opening for our hearing this morning. We are grateful for your input and look forward to asking you some questions when we have completed the panel.

Now, I would turn to Mr. Treffinger, please.

Mr. TREFFINGER. Thank you, Chairman Clinger and distinguished Members of Congress. Thank you for coming. You happen to be within the borders of the county where I am the county executive, Essex County.

Let me state to you that I want to, if I can, capsulize some of the efforts that we have been making on the county level over the last 8 months and hope that it may provide an example of two things, what governments can do by privatization and out-sourcing methods, in addition to cost-cutting, what government can do—local governments can do, like ours, with regard to more innovative strategies, and hopefully, that will tie in with what I believe is the need to devolve more power to the States.

As the county executive of Essex County, it has long been my belief—and that belief has been reaffirmed by the last 8 months—that the more power you get closer, rather than more—than remote—to the citizen, the better off you are.

Let me state first that, if there is any example or glaring and eloquent argument for the notion of limited government, it is Essex County government.

We are one of the most densely populated and most urbanized counties in the country, and unfortunately, we have had a very sad long history of not only inefficiency and financial shenanigans but also a sad history of corruption.

One needs to look no further than to Orange County, CA, to witness just how dire the situation has become for county government leaders trying to avoid insolvency in the face of fiscal mismanagement, deteriorating revenues, and increasing cost to maintain county government as it is.

Let me state that, with regard to county government in New Jersey—and this may strike some of you as odd, since I am the county executive—I have felt for a very long time, philosophically—and now as a person who has been in charge of Essex County government for the last 8 months, that philosophical opinion is buttressed by empirical evidence—that we do not need county government in the State of New Jersey and perhaps in other States.

I would like to see the government over which I preside eliminated, and I think by doing that, what you would do is you would create less job opportunities for politicians, less job opportunities for recipients of politicians' patronage, you would eliminate an unnecessary layer of government.

Sixty percent of all the programs that Essex County citizens pay for are State mandated and State controlled, and that has been that way for a long time.

The other 40 percent are discretionary programs which I believe, if it is decided that they are needed at all, which be much better handled by the municipalities, which is a government closer and more accountable to the people.

Besides the philosophical belief that this extra layer of government—which, by the way, goes back to before the creation of an

independent United States—at least in our State, when New Jersey was a colony, county government existed, and frankly, most of our taxpayers still feel very much in that position as colonists with regard to a mother government in a remote place and politicians who tell them what to do only at tax time when they come around and take their money and are invisible most of the time other than that, but in Essex County, we have a situation which, I think, because of its facts, speaks so eloquently to the need that you do not need county government in our State.

It might work in some other parts of the country. It might have worked very well in the 17th century. In our particular county, we have 22 highly sophisticated organized incorporated municipalities. They can perform their functions quite well.

We also have a very highly structured and, now, under Governor Whitman's leadership, a very competent State administration. It can perform the functions that are mandated by the State very well. So, in the State of New Jersey, I believe county government is not necessary.

Unfortunately, it is a creature of legislation, and only our State legislature can make that determination.

So, my goal is to try to downsize, to try to reduce in scope and in size this monstrosity that has a budget of half-a-billion dollars, that has—takes between 25 percent and 32 percent of the property tax dollars of our local citizens each and every year for services that would be better handled, those that are mandated by the State, better handled by the State, and those that are not mandated, better handled by the municipality.

If I could bore you for a moment with some of the facts about Essex County which I think speaks highly to what I have been saying and also talk about some of the things we have tried to do.

When I took office 8 months ago, we inherited a $161.5 million deficit; $69 million of that was a recurring or what is called a structural deficit; $92.5 million of that is a non-recurring deficit.

Well, in our first few months, we have closed that $161.5 million gap. We have instituted a multi-year plan of fiscal recovery. For the first time in 6 years, we did not increase the county tax levy.

We undertook the largest spending cuts in county history and, I am told, one of the largest cuts by any local government in New Jersey State history, over $50 million in the operating budget, and I am proud to say that, even though I am a Republican, my freeholder board, which 8-to-1 controlled by the Democrats—the freeholder board unanimously approved this starting budget.

So, I think there is a new realization on the part of all people regardless of political orientation that things have to be done.

Let me just talk about some of the problems. We also inherited a mountain of debt. Over $700 million was added in new principle alone in Essex County.

The total debt service of our county over a 30-year period, 4 years ago, before my predecessor, whom I might add is now in a Federal penitentiary—before he took office, the total debt service for a 30-year period, principle and interest, was $500 million.

When I took office 4 years later, it was $1,050,000,000 and a lot of that debt was issued to pay for operating expenses.

We have over $50 million in annual debt service. We have $64.5 million that gets spent, because of the peculiarity of county government, by county taxpayers for the welfare system in Essex County.

Essex County comprises almost one-third of the total welfare cost of the entire State of New Jersey.

We are within the top 10 providers around the country of welfare delivery services, one of the largest welfare delivery systems in the country, $64.5 million in 1995 alone.

We run jails, which is State mandated and also regulated by some Federal courts.

I will try to be brief.

In trying to deal with some of these massive problems that we have inherited and knowing I cannot eliminate county government, because only the legislature can do that, we have tried to downsize it and to dismantle many of the parts, and one of the methods we have used was what hopefully is a humane method of privatization, which has only one interest and that is the interest of the taxpayer, to begin to deal with the taxpayer as the only legitimate customer of government and also as the shareholder of government, the person who pays for it.

What we have done, which has not been done before, is we privatized the cleaning and janitorial services, giving Essex County taxpayers a net annualized savings of $1,026,000.

We privatized security for the court buildings, and that gave Essex taxpayers an annualized net savings of $1,080,000.

We have sent out over 400 requests for qualifications and are in the process now of exploring privatization and the sale of a county-run geriatric center, something that county government has proven that it does not do well.

It has proven that, because in the last 5 years, the taxpayers have lost an average of $1½ million a year.

This year, it will lose over $3 million, and in addition to that, recent State inspection reports have shown that the care of the elderly has been riddled with neglect and abuse.

We are in the final stages of exploring plans to privatize three county golf courses.

We are nearing the end of a study regarding the possibility of out-sourcing and revitalizing a much deteriorated zoo which has seriously declined over the years and hope to do that with a not-for-profit enterprise.

We have been conducting a cost-benefit analysis on every level of government, and we are exploring the possibility of what I call municipalization.

Things such as snow plowing, which are performed by the county government utilizing private contractors, I hope to allow the municipalities, if they want to, the chance to take over the services in exchange for the tax money they pay to the county, and the best way I have figured out to do it is through the market, instead of contracting with private contractors, ask the municipalities if they would like to contract for that service themselves, since they know how to do it, they do it better, and they are more accountable.

Let me close, although I have more statements—it is my testimony—simply by stating we need your help, because we need more power to be given to the States, so that the States can help us.

We find ourselves in impossible situations to try to get a better handle on some of these problems, to be innovative in some of these areas, such as welfare reform, such as a better facility in handling the inmate population.

We have come up, for example, in Essex County, with some innovative programs, such as we are using in an aggressive manner non-violent inmates on a volunteer basis to help us pick up litter in the parks.

We are also instituting programs which will allow us to use able-bodied welfare recipients to help in litter removal, but we cannot do those things effectively and innovatively unless there is more power devolved to the States.

As Justice Brandeis once said, "the States are the best laboratories of democracy."

I believe that even makes more sense when you go down to the local level, and wouldn't it be so much better in our State if the local level consisted of municipalities and we got rid of the anachronistic monster of inefficiency known as county government?

Thank you, gentlemen.

[The prepared statement of Mr. Treffinger follows:]

TESTIMONY BY JIM TREFFINGER, ESSEX COUNTY EXECUTIVE TO THE HOUSE OF REPRESENTATIVES GOVERNMENT REFORM AND OVERSIGHT COMMITTEE

Good morning, my name is Jim Treffinger, and I am the Essex County Executive - the state's most diverse county. The experiences of Essex County reflects the chronic financial conditions affecting large county governments throughout the United States.

One needs to look no further than to Orange County California to witness just how dire the situation has become for county government leaders trying to avoid insolvency in the face of fiscal mismanagement, deteriorating revenues and increasing costs to maintain county government programs and services.

What makes it worse here in Essex County are the financial mismanagement and corrupt oversight of previous, calcified County administrations. In fact, despite entering office facing an enormous budget deficit from years of abuse by former County officials, I am pleased to say that Essex County is beginning to turn the corner in improving its fiscal stability through a number of efficiency efforts, such as cost cutting and privatization strategies, while at the same time reducing unnecessary expenditures of taxpayer dollars. I can tell you this has not been an easy process.

At all levels of government , elected officials are becoming more resourceful in implementing efficiency standards. Just as important though, we must assure our constituents that we are not cutting just for the sake of cutting. Our message must be that while we are often turning to the private sector for savings and efficiency government leaders must remain diligent in overseeing privatization efforts so that

services to the taxpayers are improved at the same time as cost to the taxpayers are decreased.

When I took office on January 1, 1995, my staff and I inheritied a $161.5 million deficit consisting of $69 million as a recurring deficit and $92.5 million as a non-recurring deficit.

Since then, we closed this gap and have instituted a multi-year plan of fiscal recovery. We accomplished this task by not increasing the County tax levy for the first time in six years and we did this with unanimous approval by the Essex County Freeholder Board, which is controlled 8-1 by the opposition party. We also undertook the largest spending cuts - more than $50 million - in the County's operating budget to tackle the structural deficit - the largest in the County's history.

We did all of this with only one group of constituents in mind - the taxpayers. People understood that tough choices had to be made to reclaim and rebuild the County's financial footing. We arranged a number of public hearings to get feedback from our citizens about our proposals for re-establishing the County's fiscal integrity.

As part of these comprehensive efforts, I ordered County government department leaders to explore privatization efforts to streamline services and eliminate the waste and fat that has become associated with government excesses while at the same time introducing management techniques to ensure that delivery of these services is improved.

For example, the County's cleaning and janitorial services were privatized giving Essex taxpayers $1,026,000 in net annualized savings. Not only are we experiencing the benefits of these savings but our buildings and offices are cleaner, giving our employees an atmosphere in which their productivity can only improve. 2

Security for county buildings was also privatized, giving Essex taxpayers over $1,080,000 in net annualized savings.

We have reduced or eliminated non-essential and non-mandated functions such as various discretionary grants to an assortment of groups that totaled more than $600,000. I have also ordered department heads to reduce the County's automobile fleet as well as pooling of County vehicles, saving taxpayers $500,000. Additionally, I ordered the elimination of all taxpayer-reimbursed travel and conferences.

These privatization efforts have netted savings to our taxpayers totaling millions of dollars. Although this is not a significant amount of money in the scheme of things, we are extremely optimistic that other privatization efforts will reap Essex County further savings.

It is my belief that these steps are necessary to re-establish the financial solvency of Essex County. At the same time, the aim of all governments should be to promote economic growth and individual initiative.

One way we hope to help promote a better quality of life for all County residents through privatization is a plan that will revitalize the County-owned Turtle Back Zoo which has seriously declined over the years. We have also begun exploring efforts to "municipalize" certain County functions, such as snow plowing, in which the County would devolve certain functions to municipalities in exchange for tax relief.

Recently, the County, by my order, sent out over 400 RFQ's to explore the privatization and sale of the County-operated Geriatrics Center, which has lost taxpayers an average of $1.5 million over the last five years. We project that taxpayers will lose over $3 million this year alone and, more significantly, the Center has repeatedly failed State inspections due to neglect and abuses by staff in caring for 3

elderly patients. I strongly believe that privatization efforts at the Geriatrics Center will lead to better and more accountable services for our seniors. The families of those who are residents of the Center should not have to worry about the level of services being provided to their loved ones.

I must note that since the Essex County Executive's office directly controls only $335 million of the entire operating budget, I hope my peers in autonomous agencies such as the offices of Sheriff, Prosecutor, County Clerk, Surrogate, Register of Deeds, County Utilities Authority and others will follow my lead in exploring privatization and other cost savings measures that benefit all taxpayers.

In addition to these privatization efforts, I have established a number of executive controls including:

* a pre-audit procedure set up for all spending.. This gives us a centralized control of spending and cash flow monitoring.
* a personnel committee to approve all new hires subject to a hiring freeze by my order.
* I have ordered a top to bottom welfare audit and strengthened the Office of Welfare Fraud.

Other innovations include:

* aggressive use of non-violent inmates- who I might add are volunteers - to help in litter removal in parks as well as in operating a laundry center at a hospital.
* use of able-bodied welfare recipients to help in litter removal and new beautification efforts in County parks.

- and, redeployment of 95% of county police to protection and patrol of parks and reservations.

Now, critics will say this is not leaner government but meaner government. Nothing could be further from the truth. The County is preserving the vast majority of its services and programs for the less fortunate, elderly, children and other population segments.

Our goal is to make government smaller but smarter and more accountable to those who pay for it - the taxpayers. The bottom line is : Essex County and other governments throughout the United States cannot continue on the current course or else we will experience more situations like Orange County California.

I will continue privatization and any other cost-cutting efficiencies in Essex County to give our taxpayers their money's worth, and I will be responsible for overseeing that these efforts are implemented and carried out fairly for the benefit of all county residents.

Thank you for the honor of addressing the respected members of this Committee. I will answer any questions you may have about what we have accomplished here in Essex County.

Mr. CLINGER. Thank you very much, Mr. Treffinger, particularly for your rather interesting suggestion, un-self-serving, I might say, unselfish testimony. I might just say there have been a number of people who have suggested the same sort of solution for the Congress.

Mr. SCHIFF. This is the first offer to commit political suicide that I think we have gotten in these hearings.

Mr. CLINGER. I am delighted now to recognize Mayor Pascrell.

Mayor.

Mayor PASCRELL. Chairman Clinger, good morning, and welcome to the Eighth Congressional District. I wish you would have followed your initial tack and had this in Paterson, NJ, which is the largest community in the Eighth Congressional District.

I am proud to be the mayor of the third largest city and also an assemblyman from the district. Perhaps you will come back and visit us.

I think it is important, too, that although we have an even match here, just a point of levity, of nine Republicans and one Democrat, I do believe that we need not to paint with a wide brush about who is for austere government and who is not.

So, Mr. Chairman, over the course of the last 3 years, I have heard the term "reinventing government" from many quarters. The Vice President uses it, the Governor uses it, aspiring politicians of every stripe, Democrat and Republican, use it.

I fear the term of reinventing government is in danger of becoming a cliche, a meaningless phrase that will cause people to think of us, all of us, as the living embodiment of government as usual every time we utter it.

To prevent this, we will all need to commit ourselves to making fundamental changes in the way government operates.

Paterson, NJ, has made such a commitment at the local level. The Federal Government began to cut the flow of economic assistance to State and local governments 15 years ago.

In 1980, the revenue to my city, 15 percent of it came from the Federal Government under Federal revenue-sharing, which had bipartisan support under a Republican President. This was the embodiment of federalism.

I have found that there is nothing new about the new federalism. What this policy really represented was passing the buck. Under the new federalism, a higher level of government pushed its problems off on all lower levels of government.

As a result, States and municipalities across this country have found themselves in a protracted battle for scarcer and scarcer resources. This is what I would prefer to call as fend-for-yourself federalism.

It is obvious that these so-called new Federalists never read the Federalist papers.

Years ago, those of us on the front lines of serving the public knew that we needed to get creative.

Local leaders, Democrats and Republicans, were implementing new and innovative programs long before these buzz-words became part of the dictionary, and we did this for one reason: survival.

While I do not like this dumping-on-the-locals policy of government interaction, I realize that it is, in the long term, a political reality.

Paterson has been a pioneer in adjusting to this new age of providing government services without the benefit of adequate Federal support, indeed, Mr. Chairman, with total lack of government support.

In Paterson, as I said to you before, in 1980, who made up this difference in these 15 years from 1980 and 1995?

The fact that Paterson has the least amount of public employees per resident is no accident, that our police department, the lowest amount of cops per population and the lowest crime rate of any of the large major cities in the State of New Jersey, no accident, no miracle, no mayor, community involvement 100 percent.

One of my first tasks after my election as mayor 5 years ago was to have city functions audited, and that was mind-boggling.

Paterson's health department has forged partnerships with two large major private hospitals to provide preventive medical care, which is at the basis of health reform when you come right down to it—immunizations, lead screening for Paterson residents.

The health department works with other municipalities and the County of Passaic to coordinate activities, so services are not duplicated. This is a good working model, a hybrid for the rest of the State.

Paterson's Department of Community Development has found ways to do more with less. We have forged close ties with State agencies, private lending institutions, private developers, to make Paterson an attractive site for new development and business.

We have implemented a small business loan program, the first of its kind in the State of New Jersey.

The cornerstone of Paterson's public-private partnership was the revitalization of an old historic mill in Paterson, the Cooke Mill. This development, funded with money from several public and private entities, created a 54,000-square-foot multi-use facility.

All of these endeavors I have just outlined won popular support, but some innovations were not so easily embraced.

One particular initiative was turning the management of a publicly owned water company over to private hands, and that has encountered some opposition.

Earlier this year, the legislature passed and the Governor signed a new law that would enable Paterson and other municipalities to hire private firms to manage publicly owned water utilities.

The bi-partisan measure, which I sponsored, was called New Jersey Water Supply Public-Private Contracting Act. Currently, the State of New Jersey has over 300 public water and waste-water entities. That, in itself, is an enormous, enormous bureaucracy. Many of these systems are obsolete, and they are inefficient.

What we have done in this legislation is to provide for the local public entity to hold onto the assets but have the public facility managed by a private firm. The legislation to revamp our water system was written to be flexible and to protect the interests of municipalities, but Mr. Chairman, our water system contracting process is the opposite of what recently occurred in New Jersey with the awarding of the Division of Motor Vehicle franchises.

Under the DMV privatization, there was no bidding process. Hundreds of individuals either lost their jobs or were offered the same employment for a fraction of their salary with no benefits.

The new private operators were usually politically connected individuals who received no big contracts, did not need to make a cash investment. I believe that the DMV transfer model was a bad deal for taxpayers.

I believe that some of the very real and very bad fallout associated with the DMV transfer has fostered increased public skepticism of privatization efforts, including modest endeavors like the private water-management concept I just spoke of, which is already in effect in the city of Hoboken.

Before I conclude, Mr. Chairman, I want to make a request of this committee. I call on this committee to consider imposing a moratorium on large-scale privatization of government services until certain national criteria are designed.

Without guidelines for job training for displaced workers in a system that makes sure the lowest-paid worker does not always lose out to the higher-paid manager, privatization as a way of decreasing cost at the expense of quality services and workers is wrong, and it is not good government policy for the taxpayers.

I also urge this committee to propose that every government entity, from the Federal Government to the smallest town, examine every function of government for several reasons: efficiency, to determine what services can be done in conjunction with private industry, to determine what services might better be handled by a public institution, and a generic review, as was suggested a few moments ago, of what government should do and should not do in the first place.

This is very different than the usual micro-review for which we pound our chest about, we politicians.

In closing, I would like to stress that, if government encourages flexibility from its workers while rewarding creativity and seeking input from service providers, government will operate better.

There is so much that can still be done to improve services that government provides to and on behalf of taxpayers.

I encourage every one of you to visit an old city like Paterson so that you can see firsthand the achievements we have made in making government work with private industry in the face of reduced Federal assistance, assistance that is needed now more than ever.

Mr. Chairman, when you and your committee go back to Washington, I hope you bring back some of the success New Jersey has to offer to you.

Thank you very much, sir.

[The prepared statement of Mr. Pascrell follows:]

Hon. William J. Pascrell, Jr.,
Mayor of Paterson/
Deputy Minority Leader
New Jersey General Assembly
Statement
United States House of Representatives
Committee on Government Reform
Montclair, New Jersey
September 9, 1995

Thank you, Mr. Chairman. Before beginning my remarks, I would like to commend you and the members of your committee for taking testimony in New Jersey's Eighth Congressional District.

The town of Montclair certainly makes for a good hearing site. However, I would be remiss in my duties as the Mayor of the City of Paterson if I didn't point out the fact that you missed a golden opportunity for greatness when you moved this event from its originally scheduled location in Paterson.

Although my judgment may be clouded, I believe the City of Paterson has been innovative in confronting the challenges and problems facing government today. Certainly, the Silk City -- the nation's first industrial city -- would have provided an ideal backdrop for today's discussions.

Over the course of the last three years, I've heard the term "reinventing government" from many quarters. The vice president uses it. New Jersey's governor uses it. Aspiring politicians of every stripe -- Democrat, Republican, independent -- use it.

I fear the term "reinventing government" is in danger of becoming a cliche -- a meaningless phrase that will cause people to think of us -- all of us -- as the living embodiment of "government as usual" every time we utter it. To prevent this, we all need to commit ourselves to making fundamental changes in the way government operates.

Paterson has made such a commitment at the local government level and it has real accomplishments to show for it. Let me tell you how this occurred.

As you know, the federal government began to cut the flow of economic assistance to state and local governments fifteen years ago. Many people called this the "New Federalism."

Over the course of time, I have found that there was nothing "new" about the New Federalism. What this policy really represented was the same old story. Passing the buck.

page 2/Pascrell/government reform

Under the New Federalism, a higher level of government pushed its problems off on all lower levels of government. As a result, states and municipalities across this country have found themselves in protracted battle for scarcer and scarcer resources. This is what I prefer to call "Fend-For-Yourself Federalism." It is obvious that these so-called New Federalist did not read the Federalist Papers.

Years ago, those of us on the front lines of serving the public knew that we needed to get creative. Local leaders Democrats and Republicans, were implementing new and innovative programs long before buzzwords like "reinventing government," "privatization," and many others became fashionable in Washington and state capitols across the country. And we did this for one reason: survival.

While I don't like this dump-it-on-the-locals policy of government interaction, I realize that it is the long-term political reality. As such, Paterson, has been a pioneer in adjusting to this new-age of providing government services without the benefit of adequate federal support.

In Paterson, federal dollars once amounted to 15 percent of municipal aid. Today it is well under one percent.

The fact that Paterson, New Jersey has the least amount of public employees per resident is no accident. It is the result of hard work. We rolled up our sleeves to deliver more efficient government.

One of my first tasks after my election as mayor five years ago was to have city functions audited. Over the last five years I have continually checked to make sure those recommendations have been implemented. When conditions changed, we changed with them.

For example, Paterson's Health Department has forged partnerships with two large private hospitals to provide preventive medical care, immunizations, and lead screening for Paterson residents. The Health Department also works with other municipalities and the County of Passaic to coordinate activities so services are not duplicated. This a good working model of a hybrid regionalized approach to providing local health-care services.

Paterson's Department of Community Development also has found ways to do more with less. This agency has forged close ties with state agencies, private lending institutions and private developers to make Paterson an attractive site for new development and business. We have implemented a small business loan program that has a feature often unavailable in other communities: a technical assistance and a follow through component which helps increase success rates.

During my administration, the cornerstone of Paterson's public-private partnerships was the revitalization and restoration of the Cooke Mill Building, an old red-brick building that served as the offices of a 19th-century locomotive manufacturer in the city's historic district.

This development, funded with money from several public and private entities, created a 54,000-square-foot multi-use facility. The building contains dental and medical clinics, and housing for 34 moderate income families.

All of these endeavors I have just outlined won popular support with local residents. But some innovations were not as easily embraced.

One particular initiative -- turning management of a publicly owned water company over to private hands -- has encountered some opposition that may prove instructive to your committee and its research into local government efficiency efforts.

Earlier this year, the Legislature passed and the Governor signed a new law that would enable Paterson and other municipalities to hire private firms to manage publicly owned water utilities. This bipartisan measure, which I sponsored, was called the "New Jersey Water Supply Public-Private Contracting Act."

Currently the State of New Jersey has over 300 public water and wastewater entities serving millions of customers. Many of these systems are obsolete and inefficient. They require large-scale investments that will both improve efficiency and enable us to achieve compliance with federal clean water and safe drinking water regulations. The water purveyor that serves Paterson, Clifton and Passaic -- the Passaic Valley Water Commission -- is among these aging systems.

The three towns are considering a switch to private management at the water commission in an effort to reduce overhead costs, thereby freeing up badly need capital to improve the commission's water infrastructure. But for all our well-grounded intentions, some have attempted to sidetrack this potential proposal. The culprit: misinformation.

Although the public demands more efficient services, people often balk when the time comes for instituting real and effective changes. For example, some customers think any changes in our water system will increase rates, while employees feel that they will automatically lose their jobs. They fear that the devil they know is better than the devil they don't know.

While I understand these concerns, let me tell you why these are unwarranted fears.

The legislation to revamp our water system was written to be flexible and to protect the interests of the local customers and municipalities. It gave the citizens and the governing bodies of the affected municipalities control over any potential contracts with a private entity.

Moreover, no assets change hands under this law. The three communities that now own shares of the water commission continue to own them. The commission remains intact.

Any contract with a private firm also would undergo considerable scrutiny. Under the law, five different government entities must review or approve of a contract, and that is after a public hearing and public comment period.

The private water manager concept also ensures competitive contract bidding. This would work to the benefit of local taxpayers by discouraging patronage that too often works in favor of political contributors and insiders.

Our water-system contracting process is the opposite of what recently occurred in New Jersey with the awarding of Division of Motor Vehicle franchises.

Under the DMV privatization, there was no bidding process and hundreds of individuals either lost their jobs or were offered the same employment for a fraction of their salary with no benefits. The new private operators were usually politically connected individuals who received no bid contracts and did not need to make a cash investment. I believe that the DMV-transfer model was a bad deal for taxpayers.

Regrettably, I believe that some of the very real and very bad fallout associated with the DMV transfer has fostered increased public skepticism of privatization efforts, including modest endeavors like the private water management concept.

To date, only one municipality, Hoboken, has fully implemented a transfer of its management of water services to a private concern. The Hoboken Water Department was badly mismanaged, and cronyism and inefficiency were commonplace. Under the new public-private partnership, that is starting to change.

The private operator has started to invest in the infrastructure and has created a capital improvement plan. In fact, all water meters were replaced almost immediately and a comprehensive billing process was implemented. The new operator was able to take over the facility and institute improved operational procedures, using existing employees when possible.

This initiative has already brought accountability and professionalism back to the Hoboken Water Department. This partnership also has allowed Hoboken to receive over five million dollars, which will be used for property tax reduction.

Local agencies must begin to focus their energies on running their operations as a business. These agencies must meet the challenges of an increasingly complex and difficult environment. Without a willingness to meet today's challenges, public entities will face insurmountable odds as they attempt to efficiently provide quality services to local residents.

Before I conclude, I want to make a request of this committee. I call on this committee to consider imposing a moratorium on large-scale privatization of government services until certain national criteria are designed.

Without guidelines for job training for displaced workers and a system that makes sure the lowest paid worker doesn't always lose out to the higher paid manager, privatization as way of decreasing costs at the expense of quality services and workers is wrong and it is not a good deal for taxpayers.

I also urge this committee to propose that every government entity from the federal government to the smallest town examine every function for several reasons:

First, efficiency.

Second, to determine what services can be done in conjunction with private industry.

Third, to determine what private services might be better handled by a public institution.

A generic review of what government should do and not do is in order in 1995.

This is very different than the usual micro review for which we pound our chest about.

In closing, I would like to stress that if government encourages flexibility from its workers while rewarding creativity and seeking input from service providers, government will operate better.

There is much that can still be done to improve the services that government provides to and on behalf of taxpayers. I encourage each of you to visit Paterson, so that you can see first hand the achievements we have made in making government work with private industry in the face of reduced federal assistance, assistance that is needed now more than ever.

Mr. Chairman when you and your committee go back to Washington I hope you bring back some of the success New Jersey has to offer with you.

Mr. CLINGER. Thank you very much, Mayor, for your excellent testimony, and I particularly like your criteria for how we should look at all of the functions of government, what does work and what does not work, what should be included and what should not be, what can be privatized, what should not be privatized, and I think you had some very excellent suggestions.

I would like to turn for the first round of questioning to my colleague and our host, Mr. Martini.

Mr. MARTINI. Thank you, Mr. Chairman, and may I also compliment each of the witnesses for their enlightening and helpful testimony and for taking the time out of their schedules to be here and to help us in our mission.

I have gotten a sense from each of your testimony that, as local officials, you agree with the concept that the local governments are closer to the people and, therefore, know best what the people want, need, and desire and also, as leaders of those communities, would like the flexibility to undertake to implement the necessary programs that you feel that people need in your communities and to, therefore, have more flexibility.

That brings me to a topic which most of us in this room and most of us certainly have been reading and hearing about, and that is the concept of block grants by way of implementing certain—meeting certain goals.

For the past 40 years, most of what has come out of Washington has been made by way of programs, detailed programs administered out of Washington, and the concept of one-size-fits-all and administered through a central bureaucracy.

The block-grant concept is obviously one that this Congress is seriously entertaining in different areas.

In my opinion, it does not apply everywhere, but certainly, it is one which this Congress is considering for welfare reform, as well as in nutritional reform and certain other areas of the government, and if you agree with the need to have flexibility in your local communities and to be closer to the people, I would think you would support the concept of block grants.

Now, let me just make one other mention.

Obviously, we believe there is some savings, as well, in addition to the philosophical belief that it gives you the flexibility and the ability to deliver these services more cost-effectively, but we also feel, by eliminating a layer of administration out of Washington, we can save a certain percentage of the administrative cost of getting a Federal dollar out to the public and into the hands of the people that need it the most.

The only objection I have heard to block-granting seems to be that people do not trust their local officials, and it makes me wonder, because people seem to say you need the government there, the Federal Government, to be assured these programs work, because it implies that they do not trust or have the confidence in local officials, and so, I would like each one of you to just answer my questions in terms of your support or non-support for a block-grant concept, why it would work and why it would not work.

Mayor SCHUNDLER. I very much do support it, and I tend to think that, again, politicians at every level of government are concerned with their next election, so their own interests get in the

way, but I tend to think that, because we are closer to people, it is easier for them to yell at us than it is at you, and the result is, as a rule, I think we are more responsive.

So, I do not particularly trust the Federal Government, and I do not trust the local government that much, but I do a little more.

So, I think, given that you are always going to have human sinfulness, at least, you know, you will deal with some of that problem of not using the money properly by bringing it closer.

You will not get 100 percent what you always want, but you will get a little bit more accountability and responsiveness if the money comes closer to the people.

Now, I would specifically like to mention this in the context of the welfare reform debate, which is in full swing right now.

There is a proposal in the Senate that you would take over Medicare and Medicaid, I should say, and you would give all that block-grant money to the States. I think that is a wonderful idea.

I think, on the health-care side, you could establish refundable tax credits for health care which would allow many Americans to buy their own health care with their own money instead of having to have it given to them through their business.

You could put in the MSA legislation that is working its way through the Ways and Means Committee, and I think that would further assist in that regard, and then, for those who do not have enough money to use the tax credit, you could give them, again, cash that they could on an MSA-based health-care plan.

Then you could block-grant all that money to the States. In Jersey City alone, I have 17,000 welfare families, and between Federal and State spending, it is about $20,000 plus per family. That's $340 million being spent just in Jersey City, which is more than my entire city budget.

Instead of giving people money not to work, which traps them in the slavery of welfare dependence, if I actually was able to use that money to give them jobs, I could significantly improve the quality of life in Jersey City without having to raise local property taxes, and I can give people the opportunity to earn that income and actually be able to work their way out of the dependency of welfare slavery.

Mr. TREFFINGER. Let me just state that I am an enthusiastic supporter of the whole notion of block grants. As a matter of fact, I think that it is the potential solution, ultimately, for so much of the problems that afflict particularly our cities.

Let me just focus, if I can, on my own experience with regard to welfare and the idea of block grants as how that would impact.

As I said before, Essex County is, I am told, either the eighth or the ninth largest welfare delivery system in the entire Nation, and the principle costs are borne by the 750,000 persons who comprise Essex County, because that is how the boundaries were drawn 3 centuries ago.

We are going to spend $64.5 million this year just in administering the welfare programs in Essex County. The moneys that will come from the Federal Government are separate from the administration cost.

We are responsible, as I said before, for nearly one-third of this State's entire welfare burden. We do not do it well. In food stamp

administration alone, the error rates have gone as high as 25 percent.

Now, that one might look at as an argument against local control. I look at it certainly as an argument for devolving power closer.

As my friend, Bill Pascrell, pointed out in referring to the Federalist papers, if the Federalist papers stand for anything—and I think Mayor Schundler talked about this, about distrusting levels of government.

Well, if the Federalist papers stand for anything, they stand for a very healthy distrust of all government, and I think any of us would be wrongheaded if we did not take that lesson, especially with our experience in government.

Citizens should have a health cynicism and distrust of all levels of government. So, why, then remove it and devolve it closer?

Because—just to give you an example from Essex County—in order for us to improve the administrative cost of administering your welfare programs, 70 percent of those costs and those employees' work goes to gathering information at an entry level—70 percent.

It has to do with 45 forms that are mandated, and in this late 20th century, the technological device that is used is a No. 2 pencil. There are not even any automated systems to take account of that.

I would like to change it. I cannot change it without permission from the Federal Government. That is an insane way to run things.

Block grants would allow the States to have more flexibility.

You would bring closer to the people who pay for these costs the power to decide how those costs are actually allocated and administered, and I think block grants would allow the States to give us certain flexibility on local levels to deal with some of these pressing problems, particularly in our urban areas, problems where there is a welfare dependency which is destroying the lives of the people on it, and there has really been nothing but a warehousing, a simple warehousing of human beings, with no effort whatsoever made to try to counsel and to get people off the welfare rolls and onto the job rolls, to allow them control over their own destinies.

That is impeded consistently by bureaucratic regulation that goes all the way to the remote capital of Washington, DC. We cannot even change simple things.

Even though we are responsible for it, even though we are responsible to pay for it, we cannot change simple things in simply replacing a pencil with a computer, which would save millions of dollars of taxpayer's money and provide better services to the needy who are rightfully entitled to those welfare benefits and provide better means of job training to get people off the welfare rolls.

We cannot get that done, because we cannot move without permission from the Federal Government. Block grants would make a difference in that, I believe.

Mayor PASCRELL. Mr. Chairman, I am not so sure that block grants would make the difference that we are talking about here. We do have block grants, as you know, in the areas of housing and economic development, as an example.

To transfer that policy and philosophy on the social level, I believe, has the social fabric in jeopardy.

We will go back to the 1940's and 1950's, when States and local governments shaped their own individual policies and forced people who happened to be poor to other parts of the country. You know that, I know that, and this is what we need to be aware of.

We are very proud in the State of New Jersey that we are 1 of 26 States that have received an OK from the Federal Government to reshape our welfare system, to make it more difficult to get welfare and yet, at the same time, to have husband or father and mother live together and not under the present system, which provides a disincentive for them to do that.

What I am saying to you, Mr. Chairman, is I would not be too quick to jump into block grants in terms of social services for our people unless there are some standards, so that we are playing on a level field, and I think that those standards must be from the Federal Government.

We cannot permit each State to simply decide what will be the conditions upon which one can receive assistance from the government if that individual is disabled, if that individual is poor, if that individual is old.

Block grants is not the answer here. It may be part of the solution, but I would hesitate to say that I do not believe it is what we should be looking for.

Thank you.

Mr. CLINGER. The gentleman's time has expired.

The gentleman from New Mexico.

Mr. SCHIFF. Thank you very much.

Just a couple of questions.

Mr. Treffinger, New Mexico, like—I think every State has counties, some more than others.

New Mexico, of course, has county government which may well even go back further than your own, and we have some of the difficulties in county government that you have described, but one reason we have county government is that we have a relatively large population that does not live within an incorporated municipality.

Even in the Albuquerque area, where I live and which I substantially represent as a geographical area, there are a large number of people who live outside of the boundaries of Albuquerque or of other municipalities.

That is the key reason why county government remains in existence. If county government went away in New Jersey, do you have a substantial number of people who live outside of municipalities, and if you do, what would they do?

Mr. TREFFINGER. I think what you said shows the difference and I think also brings to bear the point that these are issues that are better handled on a State-by-State basis, because each State is unique.

I know in Colorado, your neighboring State, and in your State, there are large numbers of unincorporated municipalities. Not the case in New Jersey. We have a great many municipalities. We have a long tradition of home rule.

I know former New York Governor Cuomo on a recent radio program was critical of New Jersey's tradition of home rule, because

as he said, there are so many boards of education and there are so many municipalities making decisions.

I happen to think that, while that may not look to be the most efficient in theory, it turns out to be the most efficient and, more importantly, it serves the higher interest of a democracy that is closer to the people.

In our State, we have very sophisticated and all incorporated municipalities within the county.

Connecticut, which is a State not that dissimilar from us, got rid of county government by a referendum in its State in 1978, and while there was initial displacement of taking money out of one pocket of the taxpayer and taking it out of another, overall they have saved a great deal of money because you have eliminated that unnecessary bureaucracy, and it depends on the State.

I think out west, where you are from, and you have large open spaces—we, in a very densely populated area, do not have that, and I think our differences are not unique.

Mr. SCHIFF. In other words, your proposal might work here and in some States but not in others.

Mr. TREFFINGER. That is right, and that goes with the whole idea of why I would respectfully disagree with my friend, Bill.

I think welfare and all the other notions of block grants—I think every State is unique, and the States are much better able to judge for themselves what is better for their State.

I would like to see an elimination of county government in New Jersey, just as the citizens of Connecticut did, but that might not work for the citizens of New Mexico, because you have unique patterns and structures of government.

Mr. SCHIFF. Mayor Pascrell, did you want to add on that?

Mayor PASCRELL. If I may, sir.

Mr. SCHIFF. Please.

Mayor PASCRELL. I am glad that this community has, in the past, also looked at generic changes, structural changes, rather than just hit-and-miss kinds of things.

The question of your State, the State of New Mexico, and the State of New Jersey—you have different levels of taxation in both States. The tax structure is very, very different.

I do not know if I would go as far as Jimmy in doing away with county government, although I am pretty close. I want accountability, for instance, on levels of government.

How would you feel, the local official, if you did not send out the Federal tax bill but you left that to the mayor of every town in the United States?

What happens in New Jersey—and, I am sure, in many other States—is that we send out the tax bill for both the county and the schools, and regardless if you distinguish it and you define it, the local officials—Republican, Democrat, whatever—they have to take the heat for that, and that is all well and good.

I am looking for levels of accountability. I think nothing brings religion to the process better than, if this is what your expense is, then you have to stand there and ask the public to return some dollars if you have to pay for that service.

That will sober up the system on every level, and I am sure that this is true with the Federal Government, as well.

We have had some sobering effects over the last 10 years, and I think the rate of increase of government has declined, thank goodness for all of us, and yet we are being realistic so that we do not leave anyone behind.

So, each State is different. On the other hand, I do not want the ability—and I would ask you this question rhetorically at this point, of course, in all due respect.

Do you think that each State would have the same conditions, for instance, for welfare that exist now under the Federal system? If the answer to that question is no, then we better have some safety net to help people.

We cannot just throw people to the wind, and that is what my concern is about social block grants.

Mr. SCHIFF. Mayor Pascrell, my time is about up here, but briefly, you criticized the privatization of the Department of Motor Vehicles. I am not familiar with it, but I assume that just happened in New Jersey, and that is what you were referring to.

I presume that was a State operation, and it was then privatized.

Mayor PASCRELL. It was partially, Congressman, both a State and private. Now it is totally private.

Mr. SCHIFF. I have one question. Although you talk about the number of employees and the salaries of employees, all of which are important issues, how has the service to the public been affected by the transfer of that responsibility to all privatization?

Is it better, is it worse, is it the same? How would you classify that?

Mayor PASCRELL. Well, not only is it worse, but it is demeaning, because the people that we lost in the process. The people who did work for DMV, Republicans and Democrats and Independents alike, knew the system, knew how to detect people who had false identification, for instance, and it is interesting that, during the process of privatizing the rest of the DMV, the State then had to go out and hire part-time people to shore up the system in a hurry. So, it has not worked very well.

This is not a question about privatization so much as how you do it, if you do have a compassion for the process. Every time government lays off someone—someone jumps up for glee, of course—the government has to pay 40-percent unemployment.

This is something that goes deeper than simply the surface issues we have been debating about privatization, and I would conclude on the DMV it has not worked well.

Mr. SCHIFF. My time has expired. Thank you.

Mr. CLINGER. The gentleman's time has expired.

Mr. SCHIFF. Mr. Chairman, if I could ask for indulgence, I think Mr. Treffinger wanted to respond briefly on that.

Mr. TREFFINGER. If I could, because we have been very much involved in privatization, and I think it has to be looked at on a case-by-case basis. Just to give you one example—I mentioned in my opening statement the fact that we privatized the cleaning services.

The cleaning service—we have two criteria: cost to the taxpayer and delivery of services. We have saved on an annual basis over a million dollars of direct taxpayer subsidies by privatizing that function.

In addition, it is actually better now than it was before, far better.

It took about 2 months to sort it out, because you had a whole new operation in effect, and just like in the real world, in business, when you change one scheme with another, there is always an initial startup problem, but now the service is better, the cost is down.

We also included with that a very aggressive job placement program for the workers who were displaced, trying to find them jobs in the private sector, and most notably putting them on a list that, as other county positions opened up, they would have the first option for those other jobs, so this was done with a certain amount of compassion for the people who were displaced, and I do believe, in New Jersey, there is probably no institution of State government that has been, is now, and will be hated as much as the motor vehicles division.

Everybody hates it, and so, changing that, before or after, it does not matter, it is forever.

Privatization does not always make sense, but you have to weigh the cost-benefit analysis. It is not just budget-cutting, it is not just saving costs.

I think that is essential, but you also can sometimes get not just the same standards by saving money but even better service, and you can do it in a way whereby there are job-placement opportunities for the workers.

Mr. CLINGER. In view of our time for questions in this hearing, I am going to remind my colleagues and, hopefully, the witnesses, we should try and keep the questions very brief and the answers very brief.

I would now recognize the gentleman from California, Mr. Horn, for 5 minutes.

Mr. HORN. Thank you very much, Mr. Chairman.

I found it a fascinating discussion on local government, but there is not much we can do about abolishing counties. Let me ask you about something we can do.

I have been a long-time supporter of block grants, as have you, obviously, but one thing that concerns me, as I listen to people at local, city, county, State government, and the Federal Government, is the States complain that the Federal Government imposes X, Y, and Z mandates on them, but does not give them the money.

This committee was in the forefront under Chairman Clinger in trying to solve that problem. We realized that at least we ought to be conscious of what we are doing before we do it.

The counties and the cities complain about the State government forcing mandates on them and not providing the money.

As you know, the history in this century is, essentially, it went to State governments initially, and then, when the Roosevelt administration wanted to get around the States, which were largely run by Republican Governors, they gave grants direct to cities.

With revenue sharing, we gave to all of those—States, counties, cities.

Now, one of the things I'd like your reaction to is should we, at the Federal level, in any block grant, limit the percent of money the State can keep before it flows through to the local governments,

because there is a great fear in my communities—cities and counties—that the State will simply fund their own bureaucracy in Sacramento—the second-largest bureaucracy in the country, after Washington—and we will get a trickle-down to counties and localities.

Now, in a sense, Mayor Pascrell is in an unusual position. You are at the State level and the local level.

I have never seen that before, so I regard you as a rather unique individual, just on that basis, and I think it would probably be a violation of the constitution in California, but what would you do?

Would you take 10 percent and limit it to the States' take and then have all the rest of that flow through, because in many cases, it is simply writing a check, or figuring out a formula. If we could cut down the State administration and move that money down, I think we would be making some progress.

Mayor PASCRELL. In New Jersey, we have just passed legislation—in fact, it will be on the ballot this year—State mandate, State pay. We will have a conference on Monday in Trenton.

I would like to see the same thing on the Federal level—Federal mandate, Federal pay—because you cannot simply impose on governments in a local county or municipalities certain conditions and then expect them to find the dollars, just expect them to find the dollars to implement whatever that specific condition is, and yes, I would—if the block grants become a reality, I believe that we should do that.

States are very good in skimming off those dollars that supposedly are going to wind up in the counties and municipalities in the State of New Jersey. I am sure it is no different than any other.

Mr. HORN. Right.

Mayor PASCRELL. So, I would limit the amount of dollars that could come off for administrative costs, flow-through costs, whatever you want to call it, whatever fancy terms you want to use.

I still do not—Congressman Horn, I still would caution on the question of jumping into these block grants. Unless there are some national standards, I fear that you are going to have a different set of circumstances in different parts of the country.

Mr. HORN. Well, I appreciate that. Where would you put that percentage, though? That one I want to deal with on the next block grant flowing through. Would you say 10 percent at the most to the State of New Jersey?

Mayor PASCRELL. I would think that that would be very high. I cannot, for the life of me, think of administrative costs that will necessitate a flow-through to the local communities.

Mr. HORN. Revenue-sharing, for example, required about 1 percent.

Mayor PASCRELL. That is correct, and I still believe, in my opinion, that the Congress of the United States should review how Republicans and Democrats, working together, forged a system called revenue sharing that did work for the time and sent money, tax money, back to the local communities.

You want to talk about a block grant—that was the largest block grant this country had. Why did we ever do away with it? You know why, and I know why.

Mr. HORN. Well, I do not know what your reason is, but please, I would like to hear it.

Mayor PASCRELL. I believe that this was, as I said in my testimony, passing the buck. I mean those dollars that went back to the communities throughout the United States, small and large, were dollars that were used in operating costs, and I do not agree.

My parents did not bring me up to distrust government—I am sorry. If there are scoundrels, then get rid of them. I happen to respect the Congress and respect the institution.

I may not agree with you all the time—and I am sure I do not, Congressman—but I respect what you do, for sticking your neck out and serving the public, and I believe we should be fostering trust rather than denigrating government every chance that we have.

Mr. HORN. Well, I will tell you, just in a nutshell, my version of it is that, No. 1, the Washington lobbyists, the Washington civil servants, the permanent bureaucracy on Capitol Hill, the subcommittee staffs, plus the long-serving—two long-serving chairmen for 10, 20 years—all blocked and fought every step of the way revenue sharing. The reason it happened—and a lot of us had advocated it and advised President Nixon on it before he ever went into office on this, and what happened was Wilbur Mills decided to run for president, and said what can I do for the localities?

Well, there was Nixon's revenue-sharing proposal, and it lasted for exactly 10 years, and unfortunately, President Reagan gave in, but one of the reasons for giving in was he saw States such as California writing checks back to the citizens when they had a surplus in the government, and the Federal Government was increasingly getting a major public debt. So, that is one of the reasons it went down.

Mayor PASCRELL. But that system, Congressman, was monitored very carefully.

You had to account for every dollar in the revenue-sharing program, and I think that President Nixon, under his administration, did a great job in implementing revenue sharing as it was put together in a very bi-partisan cadre of Congress-people, and why—you know, there was something that was not broke, and we fixed it, didn't we?

Mr. CLINGER. Very briefly.

Mr. TREFFINGER. I will be very brief.

On this whole issue, I think the pattern, the philosophy, should be the money should follow the responsibility.

If the responsibility of administering programs rests with the mayor of Paterson or the mayor of Jersey City or the county executive of any of the counties, such as welfare, for administration, the money should go there and not be allowed to be skimmed off by any other entity, and if the way to do it is to put an artificial formula of 1 percent—I think 10 percent is much too high—I do not even know if that is enough.

I think what you should try to do is develop, if possible—and it may not be efficiently possible—to figure out where the money—now if the State wants to take over the administration of welfare, which I would love them to do, that would be fine, but all the money should go, including all the administrative costs, to the

State, but so long as any of these programs are administered on the local level, there should be a formula devised where the actual money follows the actual responsibility, so that you do not have administrative costs being taken out by one entity for something that is merely a pass-through operation, and by the way, I was taught to trust government, too, by New Deal Democrat parents, but experience has taught me otherwise.

The Federalist papers are right: Distrust government.

Mr. CLINGER. That is the most often quoted oxymoron: I am from the Federal Government, I am here to help you.

Mr. TREFFINGER. Hide your money.

Mr. CLINGER. Does the gentleman from Virginia, Mr. Davis, have any questions?

Mr. DAVIS. I will try to be brief, Mr. Chairman.

Mr. CLINGER. Yes, please.

Mr. DAVIS. I was in local government for 15 years. I was the equivalent in Virginia of a county executive of the county of Fairfax, 900,000 people.

We did not have townships then. If you abolished the county government then, it was just the State, although I think a lot of people still would have like to have abolished it from time to time.

I wanted to ask a couple of questions.

First of all, my reaction to the revenue sharing is the Federal Government found out they did not have any revenue to share. They were running huge deficits every year, and that is what eventually killed the program.

The role of privatization is one you have all talked about. It is a great tool for local governments and the Federal Government in some cases, and we have all seen—and I think some of you have cited—some of the times that it did not work, as well.

We had a case in our county where we—for school bus repairs, we hired a private firm, Johnson Controls. I do not recommend them to anybody.

They came in, and the backlog went from 2 percent of buses out of commission to 23 percent in about 3 weeks, and the kids were not getting picked up, and it does not always work, but we had some great successes with it, too.

Our transportation system—instead of using what's called the Metro System in Washington, we privatized it, saved a lot of money, and it has been very successful, improved service.

So, I think it does depend, but I think privatization is an important factor, but it is not the end-all.

Our goal, it seemed to me, was to try to provide the best services we could at the—at the lowest cost to our people who were paying the bills every day, and it is an individual basis in terms of privatization.

I want to ask, second, about—and get your reaction to that.

Second, tax exemption of municipal bonds—under the flat-tax proposal, that would go out the window. What does that do to your ability to finance infrastructure and sell bonds, and what would it do to your budgets? Do you have any reaction?

Third, just to note, on the unfunded mandates issue, you have got—Chairman Clinger moved that bill out of committee like the

first day that the House was in session, moved that through. So, everybody here cosponsored that legislation.

We were really pleased with it. We think it will have a long-term effect on how local and State governments operate.

I would just appreciate your reaction to all that.

So, let me start with Mayor Schundler.

Mayor SCHUNDLER. I think you should go toward the flat tax. I think the fact that you would eliminate the tax exemption of municipal bonds would have no real impact.

Right now, the difference is only about a point, and I will tell you, the honest truth is, if interest rates for government bonds were at 3 percent, because there was a higher savings rate and there was enough stronger economy and more revenue being generated by economic growth, which could easily make the load we are carrying in social services much less, those same dollars would be a much smaller piece of a much larger economic pie.

Mr. DAVIS. So, you think the big picture is more important than carving out the exemption.

Mayor SCHUNDLER. I mean the bottom line is America is prospering and growing, and savings rates are going up. Interest rates are going to fall, and we are all going to be much better off.

Mr. TREFFINGER. With regard to the first thing you talked about, privatization, this is an issue which works in some—our experience has been positive so far, but I do not think we can afford to deal with this on an ideological or philosophical basis.

It has to be a pragmatic approach, just as you said, Congressman, in your experience. To quote a Democrat, FDR said experiment, try it, if it does not work then do something else, and I think that is the criteria that we should apply with regard to privatization efforts.

When things do not work because they are run inefficiently by government, which in my experience has been most of the time, you could try other things.

We have had very good success with the privatization efforts we have looked at, but the criteria has to be cost savings and delivery of services. If it does not come out that way in the wash, then you should not pursue that.

With regard to the tax exemption, I totally agree with Mayor Schundler. I think, for the 1 basis point of difference, I think that will not make a difference after the total idea for the flat tax is put in. So, I very much favor that, because I think that encourages economic growth.

With regard to unfunded mandates, all of us here are mayors. They are two urban mayors. I have now become an urban county executive, and I can tell you that the idea of the government that mandates should be the government that pays is an idea that is very dear to my heart, and I think it is not only good small "d" democratic policy, it is also a very efficient and fair policy.

Mayor PASCRELL. I disagree on the subject of removing tax exemption from this bonding.

I know the bonding capacity, for instance, in the mayor's town of Jersey City in Essex County—if you ever took those off the tax-exempt rolls, first of all they would become less attractive to the investor; second of all, you would immediately increase property

taxes in the municipalities, and if we are talking about, well, wouldn't it be better in the longer run? How long, and who is going to pay that burden between now and then?

Second, the question of private-public is an interesting one, and I am glad you did bring that out, Congressman. All that glitters is not gold. In Paterson, we went on some private—some services that were private back to public, and I will tell you why. It is simple.

Carpentry, electrician, plumbing, air conditioning—we have saved hundreds of thousands of dollars paying employees with full benefits, and we have to pay three times, four times the amount per hour on a privatization of those services. It did not work.

So, we went the other way, and that is going to happen, and I think the example you bring out is a very excellent one, because this is a catch-all phrase, privatization.

We think all of our worries are going to go away, and we think that the quality of services are automatically going to improve.

Now, we have seen in some instances, not all, that quality of service has not improved; in fact, some areas got worse when government went into privatization.

So, my point is that you judge each situation as it is, but you explore all situations, and what I think is more important is public-private where private does not own public assets but simply perhaps manages the public entity.

Mr. DAVIS. Thank you.

Mr. CLINGER. The gentleman's time has expired.

The gentleman from Washington, Mr. Tate, is recognized for 5 minutes.

Mr. TATE. First of all, thank you for your testimony.

A couple of things that I would like to talk about—on my flight here this morning, I sat next to a woman who I had never met before, telling me she worked for a Federal agency, and she was very supportive of the idea of block grants, very supportive of the idea of reductions in her particular agency.

What her concern was—and this is what I would like to ask you from some of your experience—was that cuts were going to happen in the front-line workers, as opposed to some of the middle management and some of the layers of middle management.

How were you able to, as you went through downsizing a particular department or maybe even eliminating it, but specifically when you downsize, making sure that you did not cut the service but you cut the bureaucrats or the middle management that really were pushing papers and not really helping the public? I would be real interested in hearing some of your comments on how you made that happen, to make sure that we can do some of those same types of things.

Mayor PASCRELL. Well, you do not do what we did in New Jersey, and that is provide communication that you are cutting government and yet you increase tremendously the number of people making over $55,000 and $60,000 a year over the last year-and-a-half. That is a fact of life.

So, we have all of these people who are on the minimum scale coming in, $14,000, $15,000, $16,000 a year jobs. They are always the first to go, and you know that, Congressman, in any level of government, as in private industry.

So, the question is fairness, and that is why you need some kind of standard, some kind of retraining if you are going to bring in and privatize any kind of service that the public needs.

Mr. TATE. My question is how did you make sure that middle management was gone and not the front-line worker?

Mayor PASCRELL. Well, you have to have a scale between if you are removed according to seniority——

Mr. TATE. The whole reason you have the agency is to provide a service of some sort, not to create jobs.

Mayor PASCRELL. Right.

Mr. TATE. So, I guess my point is how do you get rid of the middle management that does not do anything for the person, except create a job?

Mayor PASCRELL. In the public sector, you have contracts, and you have to work through those contracts in order to get rid of middle-management people. I mean we have a tremendous amount of assistant commissioners at every department in the State of New Jersey.

We do not have that luxury on a local level. We are lucky if we have department directors, let alone assistant department directors, but my feeling is, if you are going to remove, in a true privatization, a certain amount of lower-scale-paid workers, you have to, in order to keep the morale of the troops up, remove certain people or demote certain people on middle management, and that is how you do that.

Mayor SCHUNDLER. The way you do it is by transferring the power over who is buying the service, and that is what empowerment is all about.

For instance, when you talk about our school systems, there will be absolutely zero savings in New Jersey if we go through regionalization, which is one of the things we are talking about.

The Cato Institute has done a study that shows there has been—never in the history of mankind has there been any efficiency in government because of economy of scale.

The reality is, for instance, in New York, even though they are a large city with a unitary police department, their labor costs are much higher than those everywhere else, because they have much more political power when you have that big public union.

So, there is no efficiency from regionalization. You can forget about it in terms of privatization, in many instances, because what will happen is you will see that those who are awarding contracts are doing it on the basis of political influence or contributions.

The way you do it is by giving the power to the citizen or that entity which is closest to the citizen and can be held most accountable by citizens.

If we look at, for instance, the parochial school system in Jersey City, it handles 25 percent of our kids. They have, in Newark—or Irvington, actually, where they have their bureaucracy for the parochial school system that covers not only all of Hudson County but much of Essex and so forth, they just have a handful of administrators for this enormous system, and that is because the people themselves are going and sending their children to a school, and they do not want to see the services decline.

They do not want to spend a lot of money, but they want to see quality education for their children, and because they are empowered to make the decision as to where they are putting their child, they are not going to stomach a lot of money being wasted on bureaucracy and services being poorly provided.

So, that is the way we do it. We figure out how we can make sure that every American can get the essential services they require. If we decide that education is essential, we fund it publicly, but we do not control the money.

We put the money in the hands of the people who we say we want to help, so they can make sure that, for the dollars committed, they are getting the absolutely best services, and that empowerment will result in the waste being cut out, not the muscle.

Mr. TATE. Mr. Treffinger.

Mr. TREFFINGER. The privatization efforts that we have been involved in which worked were simply an out-sourcing of the function. You eliminate not only—it does not just hit on one level, because you eliminate the middle management with it.

I have a friend who owns a small business, a grocery store, and he decided to bake his own goods, and he discovered during the course of his business that he was not very good at it and it cost him too much money.

So, he contracted for that part of his business with another local business which did it cheaper and did it better, and he contracted out that service, so that when the customer came in, however, and bought the things that he did directly and bought the baked goods that he contracted out for, that customer got a lower price and a better-quality product and bought in that same shop, and I think that we should apply those kinds of practical, pragmatic business approaches to the government, because we have lost sight of the fact who owns the government and who are the customers of the government, and it is not the politicians and it is not the workers.

They work for the people who pay the taxes, and it is the people who are the customers, and it should be that the customer is always right, because in this case the customers owns that particular business that is called the government.

Mr. TATE. Thank you very much.

Mr. CLINGER. The gentleman's time has expired.

At this time, I would defer to our former colleague and member of this committee, Mr. Zimmer, to see if he has any comments or questions.

Mr. ZIMMER. Thank you, Mr. Chairman.

I would like to address the point that was discussed by Mr. Davis and the panel on the municipal bond tax exemption.

I, regretfully, left this committee to join the Ways and Means Committee, which is considering the flat tax, and it should be made clear that we are not talking about eliminating the tax-free status of municipal bond interest. We are talking about making all bonds tax-free bonds.

Economists can argue about the impact that would have on the interest rate of municipal bonds.

I think it is most likely that, even with the beneficial effects that would lower interest rates generally throughout the economy, you

would probably end up with most bonds close to the current level of municipal bond yields rather than having municipal bond yields increase.

Now, Mr. Schundler, you have been in that business. Do you think that that is the case?

Mayor SCHUNDLER. To some degree, I would argue, whether one goes up to meet the other or the other goes down to the meet the one, you know, they are going to trade the same, but it is definitely going to occur that interest rates are going to go down and everybody is going to be better off.

Mr. ZIMMER. OK. Thank you.

Now, I would like to pose a general question.

This committee is not charged with administering the executive branch of government, as each of you is, but it does have a responsibility to establish the structure and the process of government.

So, I would like each of you to briefly address some of the general principles of management and organization that you have learned in your difficult jobs that might be applicable to the Federal Government.

We have discussed privatization at considerable length, and I think that is a very important subject to discuss, but what other principles do you think we ought to look at, in general terms, as we try to restructure and transform the Federal Government?

Mayor SCHUNDLER. I think you should be looking at what is the nature of the individual service?

What I think all of us in government should be doing is saying, you know—we should—it should be at the government level, where you have that communal debate, if it is at the State level or across the entire national level, what do we as an American people think that every American citizen should be entitled to, and when we come up together with our communal, you know, values, if you will, and we say these are things every American should be able to look forward to, then we say how do we make sure that that service is controlled again as closely to the people as possible?

Now, there is—again, I talked about religious liberty. It should not be that, at the local level, we can deny someone's religious liberty. Americans should be able to celebrate their faith in any corner of this country.

They should be able to experience economic liberty in every corner of this country, and so, that is a Federal responsibility.

That is, I think, something where you say we are going to stand up behind the Bill of Rights and we are going to stand up behind the Constitution and enforce it in every corner of this country. Well, it comes down, then, again, to issues like education.

Since we are talking about something which has to do with the individual's opportunity in this society, we should give the power to the individual.

We should be wholly focused toward voucher-approached education, and we should not be focused toward regulation which ends up empowering—which ends up, if anything, limiting the opportunity of all Americans to participate in the solution.

Right now, by virtue of the way we have the Federal Government and the State government involved in that issue, we effectively say, businesses, you cannot participate.

We are talking right now—and it is a big issue before us—with regard to whether churches can be involved in social welfare.

We are sitting here with people who say they care about the poor saying that we do not want their involvement, we do not want their assistance, and that, to me, is a crime.

So, if we are talking about, for instance, education, which is an individual, you know, element of opportunity, let the person choose where they get the help, and let everybody who wants to be a provider get in the game, whether it be churches or businesses or whomever.

Let us not have government, which is supposed to be on the side of the consumer, creating a monopoly provider, which creates an incredible conflict of interest, where we end up, you know, defending ourselves and serving ourselves instead of the people we said we wanted to help.

When it comes down, again, to things like interstate transport or prisons, let us let the State work on those things and not have us getting in the way and circumscribing their ability to solve their problems in a way that makes the most sense, but there are elements which—like religious liberty, economic freedom, civil rights—where you have to stand up and make sure that none of us at the local level circumscribe what is the fundamental right of an American citizen, and there are things like, for instance, welfare, where we do have an issue that we do not want to have people being pushed across the borders, and so there does begin to be at little bit of, you know, subtlety involved and sophisticated thinking has to get involved in how do we create a system that keeps the power at the local level but does not result in people trying to push off their problems?

I commend you for dealing with that difficult question. I do believe that block grants ultimately will work effectively to do that.

Mr. TREFFINGER. I believe that any problems you have with democracy, the solution is to have more democracy.

When Jefferson talked about the government that governs best governs least, I think he was talking about giving as much power to every individual insofar as practical over his or her own destiny, and I think that is the model that we should try to abide by whenever it is possible.

The way that works, I think, with regard to what you can do—I happen to believe that, even though the practical results do not always turn out the way people might always want them to, one of the best things we have in our State—and, I imagine, throughout the country—is that local boards of education must submit their budgets for approval to their citizens.

I would like to see the use of referendums and initiatives and more and more direct citizen involvement in every budget in every government.

I do not think that is either a liberal or a conservative concept, I think that is a realistic democratic concept, and I once said that to a politician who said, my God, how can you have that happen, the people might make a mistake.

Well, that is political arrogance. They cannot make a mistake, and damn it, it is their money. They are entitled to decide what to do and what happens with their money.

Now, you in the Congress—it is impossible for you to put up every spending issue on a referendum, so it is done by elections, and as we all know, elections get caught up with a variety of things that do not focus on any one issue, focuses on a variety of issues, sometimes focuses on personalities.

So, I believe the best way to do it is the increasing democratization of the citizen's control over how his or her money is spent. The more things you can get on a ballot, to have people decide on that specific issue, the better off you are.

You cannot do it at your level, because it would be an impossibility. So, that leads to the next conclusion, which is give back more power to those government entities that are closer to the citizens.

If the Federal Government can do it, I am convinced States can do it better.

If the States can do it, I am convinced local governments can do it even better, and better does not just mean more efficient, it means what our country stands for, that the individual decides his or her own government, because the individual owns it.

I think it was a left-wing saying a few years ago: Power to the people. They stole the saying from our founders. The more power to the people over their pocketbooks and over every aspect of their lives, the better off we are.

Mr. CLINGER. Thank you, Mayor.

For the last word, Mayor Pascrell.

Mayor PASCRELL. I think, Congressman Zimmer, that we need to get away from cliches, and I think local government has done that in four major areas—crime, welfare reform, public-private partnerships, and economic growth—and I would like to start with the last one first.

It is on the local level that you have seen the generation of a manufacturing and industrial policy. There is none in New Jersey, there is none in the United States of America, and we have to have an industrial policy or else manufacturing would continue to shrink.

We still have an immigrant population, and people have to work with their hands. We are struggling with that on a local level, and we ask the executive branch and the Congress to think about economic growth of the future, which very few people are talking about in Washington.

Second, I think that, on local levels, we have, not only in Paterson but all throughout the State of New Jersey and many of your States—you have seen the creation of private-public partnerships, and believe it or not, that was precipitated by a Federal program, also which had bi-partisan support, and that is the old UDAD program, where you leveraged dollars, another successful program that went down the tubes in the early 1980's, like a lot of other good programs.

I think the Federal Government has to get into the business of helping public-private partnerships. I do not think there is anything wrong in that. I think it will help increase our tax basis.

Our biggest struggle in the communities in northern New Jersey and in southern New Jersey, too, is a shrinking tax base, and that is not going to happen by any cliche or magic wand.

Welfare reform: Welfare reform started on a local level, the changes to the welfare system started, were precipitated.

The Congress has been talking about it, finger-pointing for 25 or 30 years, and yet it is on the local level that we have generated changes that have become not only law in New Jersey but have become law with the prevalence of the Federal Government in 25 or 26 other States, and it is slowly working.

We are working our way out of that Federal system, that Federal morass.

Finally, crime: If there is any area that the Federal Government has absolutely failed, it is on the issue of crime, and of course, 75 percent of the crimes committed in America are drug-related.

On a local level, we have gotten away with more is better. We do not believe—we do believe that more cops are needed on the street. We do not believe that more cops simply mean a reduction in crime. That is not the cause-and-effect relationship.

What it does mean is we have talked to the people in the neighborhoods. We have asked them to help us fight this crime. Whatever happened to parents? Whatever happened to their responsibility?

We cannot have a cop on every corner. We cannot have a cop in everyone's house, and we would not want that anyway. We would not want that even if we could have those cops.

I think your biggest failure in Washington, those that we sent there, has been in the area of crime.

You have not stopped drugs from coming into this country. How in God's name are we going to stop them from coming into Jersey City and Paterson if you cannot stop them on a Federal level? How can we possibly do that?

I am saying to you, on the local level, we are attempting to do that, to not build moats around our communities but get people to understand their individual responsibility.

Drugs are not the problem. We are the problem. No market, no sale. Unless we begin to educate the public, small kids in the way up, I do not care how many cops you have out there.

I do not care how many laws you and I pass and pound our chest and look how tough we are on crime, it is not going to work.

On a local level, I think the Feds can learn a lot from what is going on in mayors and councils and community organizations throughout America, not only New Jersey, and thank you, Congressmen, for coming to New Jersey today.

Mr. CLINGER. Thank you, Mayor, and thank all of our panelists for very, very thoughtful, provocative, and always interesting testimony. We really appreciate your input. We are grateful for your participation. Thank you all.

May I ask all of you if you would be willing to consider responding to questions for the record at some point? Thank you all.

We now go to the open mike session of our program, which gives you an opportunity to give your opinions, your views, your questions, comments, criticisms, whatever is on your mind, and the way we are going to do that—I think you all have received—it is like a raffle or an auction or something that we are running here, but in view of the fact that we are not going to be able to hear from

everybody, we thought the fairest way to do this was to do it by random selection.

So, you have all received a ticket. You will not win the floral display or anything. You are going to win the right to ask a question.

The last three numbers are all that you need to be worried about. The last three numbers on your ticket are the only things that are different from everybody else. So, we are going to go for about 45 minutes or until Governor Whitman arrives.

The first person we would like to hear from holds ticket No. 283.

Would you go to a mike, please, and let us have your comment, and I think these comments—I would encourage all of our participants at this point to be very brief. In fact, we are going to put on a 2-minute signal for the questions.

Mr. KLEITSCH. My name is Cole Kleitsch. I am the State director for New Jersey Concord Coalition. I want to, first of all, thank the committee for coming to New Jersey and giving us all an opportunity to make our views known on the operations you are going to be working on.

Concord Coalition prides itself on trying to let our fellow citizens know about the state of the national budget, the debt in particular, which is nearly $5 trillion, and the painful news that we are going to have to be sacrificing quite a bit to get it in order for the future of America, to make sure that the children and posterity that we are charged to look after will have something there for when they are an adult down the road.

You are attempting to do something that has never been done before. You are taking entire departments and reexamining their function and their use, and what Concord often applies in that regard is what we call a means test.

A means test is simply this—and we apply this to any sort of entitlement: Is this work maintaining, and if so, what is its purpose? Is this a want or a need?

The sole criteria that we would like to apply to anything and, in particular, what we are discussing today about reforming government and, in particular, the Commerce Department—the Commerce Department is something that ostensibly serves the purpose of promoting U.S. business, and as you had mentioned earlier, I believe only 6 percent of the actual budget does that, the balance of which goes to a myriad of other functions and types of activities that have nothing to do with trade, at least in our view.

We look at that as a bureaucratic entitlement. We must ask ourselves, does the Commerce Department, in fact, provide support for business to the degree that it should, to the cost that it is costing us, and I think, as the committee's reports have provided or that we have seen, it does not.

We have to reexamine what does commerce do?

Let us develop an office of trade, if required, and let us focus those efforts on developing business, and those aspects of the department that have nothing to do with trade or need to be eliminated wholesale, let us do so, but bear in mind, in my view, something to look at, Commerce Department is only the beginning, and we go down the road, the other departments that you will be facing, such as education, are going to be very, very difficult, and as you had said earlier—and the thing I would like to leave with, be-

cause this is solely just a comment and observation—do so with deliberation.

Take a keen eye not just to cutting solely for the sake of cutting and rhetorical victory in so doing, which seems to be popular these days. We would really, really appreciate a very wise long-term view to these things.

Where such departments have a role to play in society, let them play it efficiently, but to cut simply for the sake of cutting, we find that insupportable. We must take a view, and a balanced one, which makes your job all the more difficult.

On the one side, you have got people advocating wholesale reduction of departments, and on the other is expansion and maintenance. We would ask you to walk the line, keep an eye to the future. We will support every effort that we find in our view to be a wise one.

Thank you for coming.

Mr. CLINGER. Thank you very much.

In response, we are making an effort now to look very hard at the Department of Commerce and what it should be doing and what it should no longer be doing and what it now does that could be done better at the State or local level or, indeed, in the private sector.

It is a thoughtful and, hopefully, deliberative and careful process. We are not in this just trophy-hunting. The Secretary of Commerce the other day said we were just in this for trophy-hunting. That is not the objective at all.

The objective is to emphasize the core function of that department, which is trade expansion, trade development, and business promotion, which is good for the country, but which now receives very little of the resources and the manpower of the Department of Commerce, to focus on that core activity and get out from the thicket of all the other things which are so distracting to the people who are running that department now.

So, I really appreciate your comment and thank you very much for coming.

Mr. KLEITSCH. Mr. Chairman, one last thing.

What it is going to provide for you is great practice, because as I said, I think the Commerce Department is not necessarily a trophy, but it is going to provide ample opportunity to execute those types of measures that will become more difficult as time goes on, and we thank you for your efforts.

Mr. CLINGER. Thank you.

I will ask Mr. Schiff to draw the next number.

No. 232. Yes, ma'am.

Ms. GIBBS. I was not prepared to ask a question, but I do appreciate all the work that you are doing, and I am very proud of all of you, and I am sure that there will be ways to accomplish what has to be accomplished, and I think it is great.

Mr. CLINGER. Thank you very much, appreciate your attendance.

No. 281.

Mr. GINGSBERG. Hello. My name is Stuart Gingsberg. I am also a member of the Concord Coalition. I, first of all, want to thank you for coming to our home State. I am sure all of us in this room do appreciate it.

I wanted to make a comment about something that Mayor Pascrell said. He mentioned something about laying off people and paying unemployment insurance for Federal workers.

There is also another aspect to that. That is, if you offer early retirement packages to Federal workers, you have to start paying their benefits. You have got to start paying their pensions and also an increase of COLAs.

So, what I want to state is, instead of just looking at reducing payroll, you also should look at reducing the programs, too.

For instance, in the Education Department, there is a program which encourages States to give grants to students and goes to individual States, but the States already do that, so you basically have a program encouraging States to do something they already do.

So, I think it is important to look at those type of programs, and I do appreciate you coming here, and good luck.

Mr. CLINGER. Thank you.

The panelists should feel free to interject at any point in these sessions.

No. 276. I would just ask everybody who takes the mike to identify themselves.

Mr. JANKOWSKI. Good morning.

Mr. CLINGER. Good morning.

Mr. JANKOWSKI. I am glad you are here.

I have sat here for 2 hours, and I came under the assumption we were going to be talking about the Federal Government and how to reduce the cost. I thought we were going to be talking about Medicare. Welfare is only 1 percent or 2 percent of the budget.

Now, in the upcoming months, you are set to cut $284 billion from the Medicare program.

Now, I am not going to debate the rights and the wrongs. Two hundred fifty billion for a tax cut.

Now, if this country is in such serious trouble, why are we cutting Medicare to fund a tax cut?

Now, listening to Channel 13 this past Thursday, I was surprised—they had the health-care crisis and Norman Miller, a professor from Harvard and all that, a very interesting program, and the one thing that he brought to mind is we are going to shift you people into HMOs.

Why does a Medicare recipient want to go into an HMO?

The next thing he brings up, if you do not, it is going to cost you $150 a month to stay in the traditional program. That is our Medicare.

I am going to retire in a couple of years, but I work. I qualify for Medicare.

Now, why in the world do you people sit there and say we are going to save Medicare at our expense?

Now, I just want to leave you with one thought.

Listening to you people right now, you remind me of a wedding cake, with all of the whipped cream at the top, and Republicans, you want to cut from the bottom, and you do not want to touch the cream. The Democrats want to come through that cake right from the top to the bottom.

Now, you asked about privatization. In the State of New Jersey, our great Governor has privatized Motor Vehicles, all the low-paying jobs out the door, 900 of them. In our Meadowlands, where the Giants play, 200 janitors out the door. There is no equality to any of it. There is no equality to any of it. It just seems that what you are doing—and I think you better consider what you are doing—you are making this the haves and the have-nots, and I see no fairness coming down the pike.

Thank you.

Mr. CLINGER. Thank you, sir.

Mr. Martini.

Mr. MARTINI. Thank you, Mr. Chairman.

Your analogy about Democrats cutting the cake from top to bottom—some would argue that the Democrats have been eating the cake for 30 or 40 years, at the taxpayers' expense I might add.

Let me, Mr. Jankowski, respond first to your comments with respect to Medicare. By now, I would have thought you had read the papers and read the trustees' reports.

The issue of Medicare is not one which the Republican party has raised. Rather, the issue of Medicare was raised by the very trustees of the Medicare trust fund, three of whom are cabinet-level officials of the Clinton administration, and they reported to Congress and the President in April of this year—this was not a Republican agenda item—and they reported that, unless actions were taken to save and strengthen Medicare, the program would be insolvent by the year 2002, which means, to the average person, bankrupt, which means, by law, there would be no funding to take care of the necessary medical needs of our senior citizens.

So, your argument is to look the other way, as prior Congresses have done on the most important issues facing the American people over the years, and seek only to be concerned about reelection by avoiding the tough issues, and frankly, I think your argument is one, in my opinion, of irresponsibility if you accept the very fact that the trustees have reported—not the Congress, not the Republicans, not the Democrats—that there is a serious problem, which we would expect the American people to expect that their elected officials would have the courage to seek a solution for, which is what this Congress is attempting to do.

There is no dispute about the insolvency of Medicare. The President himself acknowledges that.

The only issue now is how do we save it, and quite frankly, when you still sing to the choir about cuts, from the way I learned arithmetic right here in the city of Passaic, growing up, any real growth in any program or numbers of—actual numbers going from $4,800 per beneficiary, the average this year, to $6,700 per beneficiary in the year 2002 is, by my arithmetic, real growth. We could argue all day about cuts or not, but it does not serve the real purpose of this dialog, and that is to let the people know that we have an obligation, I think, and a responsibility to save the Medicare program, and frankly, most of the seniors who I have reached out to during the month of August—and I have had eight or nine Medicare town hall meetings—most of the seniors related to me their concerns about the waste and the excess that exists in that system and their willingness to be open-minded to options that will save the system.

Let me just conclude—because I think you raise, by way of the Medicare example, some other examples that were raised, certainly, by our mayor from Paterson, Bill Pascrell, a good friend, and I think it also helps to focus the purpose of these national hearings.

What we are trying to do is to open up the discussion for other options and alternatives to make the Federal Government more effective, and I think we have a responsibility to consider things like privatization, and as Mr. Treffinger and Mr. Schundler said, it may not work in every instance, but no Congress in the past has seriously entertained the types of alternatives that we are here today having a dialog with you and others—privatization, block grants.

It is hard to argue both ways, as we heard one of the witnesses say, that yes, there is a need to bring government back to the local districts, because there is more responsibility, but there is a question about block grants and also to suggest that it is cliche to talk about reinventing government suggests to me very strongly the alternative of maintaining the status quo, and I think most of the taxpayers out there realize—and many of the people involved in these government systems—realize they have not worked as well as they should for the kinds of moneys that we have been spending over the last 30 or 40 years.

So, to question every alternative leaves only one thing, and that is the status quo, and that brings me to the final point—and I know this has been long, but I think it is very important.

Part of this is learning from you and others who have been down this road before us how to overcome the fear of change that we all share, and that is a human fear, and that is part of this.

Whenever we talk of privatization, block grants, reinventing government, there is a natural fear that we as human beings, I think, harbor, and it is part of our process to learn from others who have gone through this, how do we manage that fear responsibly and still enact the necessary changes that we feel we are obliged to enact, because the American people have asked us to, and meet these services, but we are having that dialog.

I would rather have this dialog in an effort to seek solutions than to do what prior Congresses have done, simply allow the Federal Government to grow unquestioned, without much thought, in recent years, at least.

Mr. DAVIS. Let me just thank the individual for getting up and speaking. Can I just make a couple of comments, as well, Mr. Martini, if I could?

I was one of the Republicans who did not support the tax cuts. I voted against it. I was 1 of 11, and Mr. Schiff, my colleague from New Mexico, was another.

Medicare, standing alone, is going bankrupt. Part A, in the year 2002, runs out of money if we do not make some changes, and this is not me talking. This is Robert Reich. This is the trustees talking. So, we have to deal with that standing alone.

The President has offered some cuts in Medicare. He offers to cut $195 billion, as scored by the Congressional Budget Office, over a period, to save Medicare. Ours are up at the 270 range.

The President has also offered tax cuts. There is some difference in the levels.

So, just to put it in perspective, it is not just the Republicans talking. It is the administration talking, as well, and the degree and the effort of that is, I think, things that have to be ironed out, but to put this conversation on a level playing field, the President has also offered his cuts in Medicare, recognizes the trustees, and the President has offered his own set of tax cuts.

Mr. SCHIFF. Let me just add one word, because I am another Republican who voted against the tax cut, and that is because I agree with our Concord Coalition friends, who testified earlier, that I thought we should put the deficit first, not that I otherwise disagree with the idea of a tax cut, but I want to say that Part A of Medicare, which, as you know, is the hospital fund, is funded solely from a portion of the payroll tax.

It has nothing to do with the funds that are involved in the proposed tax cut either by the Republicans or by President Clinton.

So, in terms of Part A, which is projected by its own trustees to be bankrupt in 7 years, that does not change whether there is or whether there is not a tax cut, because of its separate mechanism of funding, and it is something we have to address.

Our chairman is back, but I will go ahead and call the next person to be invited to the microphone. No. 229.

Mr. RAYMOND. My name is Sherwin Raymond, and I live in Ridgefield, NJ. It is a small suburban area in Burton County. It is fairly affluent. We have some blue-collar workers, mostly white-collar workers. We are only 4 miles from New York, so a lot of people work over there.

My concern is that, right now, the government is spending its money irresponsibly. We have got a huge professional mercenary army of many millions of men, a lot of material, and they are mostly useless.

They are based overseas. They are based on camps. They are not watching our borders or doing anything useful. They are preparing for a war which we know is not imminent, and I think that our military budget is absolutely stupid.

After each war in our past, we demilitarized. I remember we had fleets of moth-balled ships on the Hudson River. I can remember all those things, but right now, a lot of our tax money supports a professional mercenary army, and I think that is wrong, and if we do have such a big army, we ought to use it to seal our borders or stop the drug trade or do something useful.

In China, they have a huge army, and they have them working on the roads, doing something useful.

That is just one thing.

The other thing I have is a thing about—the government is afraid to trust the people. This is very strange, because as somebody said on the panel, the people might make a mistake.

Actually, the people are mistrusted by the government, because they are supposed not to know what is good for them, but you people in Washington, you know what is good for us, and you are going to help us get what you think we need, and I think that is a bad philosophy.

Otherwise, I think, if you empower people and give them individual ability to make their own decisions within certain framework,

so you do not hurt others, that is the basis of how our government was founded, and I think we should continue that way.

Thank you.

Mr. CLINGER. Thank you very much for your comments and your input.

I would just say that I would concur with you that there seems to be an attitude too largely held in Washington that we cannot trust local officials to do what is right, that we have to establish very rigid, inflexible criteria for clean air, for clean water, for all of these things, because we cannot trust the local mayors, the county executives, the Governors to be worried about the clean air, the clean water that they are using in their own backyards.

It seems to me that is sort of a disingenuous thought, because clearly a mayor is going to be as concerned or more concerned about the quality of the water and the quality of life in his community than some bureaucrat in Washington.

So, I would concur with your view that we really need to reverse our thinking of where responsibility should lie.

The next is No. 231. Again, we would ask you to state your name, and if you do represent an organization, we would appreciate having the name.

Ms. SHAPIRO. My name is Michelle Shapiro. I do not represent an organization, but my husband is running for State Assembly, the 27th District. My topic does not have to do with that. I will say that I am a student at New Jersey Dental School.

I am a delegate to the Dental Association, a branch of the ADA. It is called ASDA, the Student Dental Association, and with all the Medicare, I am absolutely in support of all the changes going on in Medicare.

I just wanted to make one small point, that I do not think that medicine and dentistry should be lumped together. MSAs are a great idea, and they are a great idea for medicine. For dentistry, they would kill dentistry.

People are not going to go and spend the money if it is sitting in an account unless they really have to go to the dentist.

This was an issue that was brought up at our last convention in Atlanta, which was last week, and although I am in absolute support of all the reforms that are going on and block grants, I think that our Congressmen and our Senators need to realize that medicine and dentistry really are two separate entities, they have separate concerns, and that is my only comment.

Thank you.

Mr. CLINGER. Thank you very much for your contribution.

No. 293.

Mr. HOGAN. My name is Bob Hogan. I am from Morris County, Chatham, NJ, and I guess none of my Representatives are here. I enjoyed this session. I guess the comments I had—and one of them is about the military—is why are we funding the B–2 bomber?

I guess we are getting a couple more.

I forget how much they cost, but it is sort of mind-boggling, when actually, trying to be diplomatically inclined, the Air Force Chief of Staff does not really want it, but maybe the representative from El Segundo, I think, is where Northrop is, is probably going to be

happy, because he is going to be putting out a few more B–2s, when we never really effectively used the B–1.

It never served during the Persian Gulf war. It was heavy with B–52s, but I think they built 100, and they have lost about 3 or 4 of them since then. We are going to lose B–2s, also. So, I just cannot see why that money is being funded when, really, nobody wants it.

That is just the B–1. There is other things, too, but yet there are things we need, like the C–17, and I think we need that, because the C–141s are going to wear out soon, if they have not already.

That is about all I have.

Mr. CLINGER. Thank you very much. I think there is an equal dispute about the C–17, about whether we need that. I mean you have difference of opinion on these aircraft.

I think the argument made in favor of the B–2 on the floor just this past week was that the B–52s are now 45 years old or something, and the engines are falling off of the wings, etcetera, and that we need a follow-on thing.

You know, that brings to mind another point.

Members of Congress are asked to vote on a variety of things running from crop yields to megatons of nuclear weapons to all sorts of things, and it is difficult sometimes to know what is the proper decision in some of these areas.

If you are not an expert on them, you tend to have to rely upon your colleagues who are dealing in those areas, to be guided by them, but it is a tough call sometimes.

Thank you.

No. 235 will be heard from.

Mr. WAREHIME. Good afternoon, and thank you.

My name is Duane Warehime, and I am the former State chairman of United We Stand America-New Jersey. My organization supports significant government reductions, as you are all aware. We have not forwarded a specific plan for doing so.

In the 1992 elections, Ross Perot was soundly criticized by the press for not offering such a detailed plan, yet here we are 3 years later and the Congress is still holding hearings on how to reduce the size of government.

This forum today is a clear example of the difference between how American businesses deal with tough problems and how the government has dealt with the tough problems facing our society. Businesses act quickly, decisively, and government debates on and on and on and on.

You want our opinion on how we should downsize government or where we should downsize government? Our response is cut it back across the board and as fast as possible.

First, we need to redefine the limits of governmental responsibility.

Civilized society owes a certain minimum level of protection and support to its least advantaged, we all admit that. Even the most hardened cynic cannot deny the importance of a society showing compassion to those who are in difficult circumstances.

However, that compassion must be tempered with the knowledge that there are limits to the resources that are available.

This balance of compassionate realism will define the amount of support that this Nation can afford to give. It will also automatically limit the tendency for a government to act as a parent to its citizens.

Second, I would go far beyond committee hearings on this discussion or eliminating one agency.

Perhaps we need a moratorium on new legislation, new regulations, and new appropriations for as much as 2 years while government puts its entire mental energy into figuring out how best to reduce the size and cost of its operations and services.

Instead of continuing to build this monster, we need to stop, take a step back, rethink and reconsider everything that we have already done.

In the past, every attempt to cut back has been met with an equal or greater demand to increase someplace else. We must—and perhaps this moratorium is a possibility—find a mechanism to shut down the pressure for growth while we focus on the efforts to reduce.

Third, we need to create a strike force against waste, with the authority to investigate, expose, terminate and/or arrest individuals or groups of individuals who intentionally waste the public funds.

Such an elite watchdog organization would do internally for the government what the media is doing publicly. Wouldn't it be better for the government to try to police itself for waste rather than let its foolishness be broadcast to the world on our weekly news programs?

Mr. CLINGER. Can you wrap it up?

Mr. WAREHIME. I will be very quick.

Fourth, we must redefine the rules for entitlements. It is too easy to bow to the political pressure of powerful interest groups. These groups are looking out only for their own selfish short-term interests.

The long-term interests of many more Americans would be served by admitting that the changing demographics of our society have made the current entitlement programs a time bomb.

Finally, I suggest you not be moderate about these cuts. The time for tinkering is past. The theme should be slash and burn. We cannot afford to continue running up annual deficits and increasing the huge national debt.

In my opinion, even 7 years is too long to wait for a balanced budget. We must stop deficit spending as soon as possible and begin to pay down this debt. We appreciate the effort that you are making in this regard. We just feel that you need to go a lot farther a lot faster.

Thank you very much.

Mr. CLINGER. Thank you very much.

Mr. Martini.

Mr. MARTINI. Thank you, Mr. Chairman, and I think your comments are very much consistent with the mission statement of this committee and these hearings.

I think it is important, however, that by having these hearings, we do not send out the confusing message that Congress is simply listening and not taking any actions.

Quite to the contrary, in already the last 9 months, this Congress has enacted a budget resolution, is in the process, and I am confident, by this fall, the Congress will pass a balanced budget, and hopefully, the President will endorse that and sign it into law. So, even while we are having these hearings—these hearings are intended to take it a step further, and these are intended to continue the focus on the efforts that are being taken right now and the decisions that have been made already and then continue the focus for the future, to make sure we remain fiscally responsible and accountable, not just for this year or the foreseeable few years but for the future generations to come. In closing, let me say that one of my staff members, as we were going through the budget process, gave me a list one time of all of the things that the budget either eliminates or downsizes considerably, and the list is about 7 feet long and includes items by line item by line item, single-spaced typed, and that gives you some idea of, already, what is included in the process for this budget.

So, this Congress is committed to working toward fiscal responsibility but also entertaining all of the other things you have outlined in your comments and keeping an eye on that.

Mr. SCHIFF. Could I have 1 second, Mr. Chairman?

Mr. CLINGER. Yes.

The gentleman from New Mexico.

Mr. SCHIFF. I just want to say of course we have a United We Stand America chapter in my district, as I am sure exists throughout the Nation, and I meet with them frequently, and we have a lot in common. So, I want that stated first, so that my next statement is in context.

When you come to the specific need to end deficit spending and balance the budget, we are now at the time for specifics. The Congress is being very specific in terms of its appropriations bills.

The Congress will be very specific in terms of the final wrap-up bill, which we call the budget reconciliation act, which is due shortly.

I would point out that, for those that say we need to cut the deficit further and faster, it is time for you to offer specifics. If you think we have not done anything far enough in any of these areas, put it in writing: This is what we believe that you should cut further.

The Concord Coalition has done that. The Concord Coalition has put out a long list of specifics, this is where we would cut.

I, frankly, do not agree with all of their proposals, but they have put it out there in black-and-white, and I think we are at the point that, when anyone else says let us do more cutting, they should put it in black-and-white, too, or they are really not adding anything to the debate.

Mr. CLINGER. Any other comments?

[No response.]

Mr. CLINGER. All right. We have now No. 221.

Ms. MORELLI. My name is Rosary Morelli. I live in West Orange. I would like to thank you gentlemen for being here today. My regret is I do not see any women sitting up there, but maybe next time. I have two things to say.

I agree with the premise of giving the power to the people. In my opinion, elected officials serve at the voters' pleasure, and we should have more to say on how our tax dollars are spent at all levels of government.

Higher taxes do not guarantee better services, education, or quality of life.

Regarding the mayor from Paterson's remark on the Department of Motor Vehicles, I do not know if he saw a recently conducted test in the various motor vehicle agencies in the State. It was conducted by the Star Ledger.

They sent people out to test the effectiveness and efficiency and the time spent in each agency, both in those agencies that had been previously privatized and those that were privatized in the recent move.

Their results showed that the agencies that had been privatized previously worked more efficiently, effectively, and the wait was minimal. The results of their test showed that privatization at the DMV did work.

Thank you.

Mr. CLINGER. Thank you very much.

Just in response, we do have women members of this committee, I want to assure the gentlelady.

In fact, the ranking member, the Democratic counterpart to me on the committee, is Congresswoman Cardiss Collins from Chicago, IL, who had intended to be here this morning, but unfortunately something came up at the last minute.

So, I am hopeful that, in the subsequent hearings that we will be having around the country, we will have a bi-sexual representation here on the committee. I do not think I said that quite right.

Mr. DAVIS. I want to disassociate myself.

Mr. CLINGER. Let the record show that the chairman fouled up.

The next number is No. 205.

Mr. CONKLIN. I would like to thank you for being here.

My name is Kelly Conklin. I live in Glen Ridge, NJ, and I am here to comment on the congressional budget recommendation, which contains, as I understand it, a 36-percent, plus or minus, reduction in the Environmental Protection Agency's budget.

I am wondering, if Congress reduces its obligation to the States to meet the problem of environmental management and shifts it off to the States and the States, like New Jersey, reduce their revenues and push their responsibilities off onto the localities, how will the taxpayers ultimately save money?

Are we going to wind up, eventually, with an Environmental Protection Agency for the Township of Montclair or Glen Ridge? Where does it stop?

There are innumerable issues that arise when we talk about environmental protection, and it seems to me that we need a Federal template of laws and regulations that assure an equal obligation on the part of all States.

Otherwise, the States will fight with each other over how to deregulate sufficiently to draw business in. How will they settle issues across State lines in terms of environmental cleanups?

How will we dispose of radioactive materials across State lines when we cannot even figure out how to dispose of gloves that are used in a laboratory that has radioactive materials on it?

There are huge issues that this budget cut does not begin to address, and you will leave communities like mine, which had a very serious radium contamination problem, high and dry.

The people of Orange are about to find out that the project to clean up the U.S. Radium site, perhaps one of the most dangerous facilities in the United States of America, is not going to happen.

How are we going to do this? The State of New Jersey cannot solve these problems alone, anymore than the State of New York or Pennsylvania. So, how are we going to do it?

I know that we have to make rational decisions about all of the things that need to be done by government, and I know that there are things that were done badly at the Federal level, particularly in environmental protection, but it seems to me the way to go about this is to examine how this agency has functioned, take a long view, and take enough time to figure out how to make the necessary adjustments to make this agency work well, instead of just cutting the budget and running, essentially, from a major responsibility.

Mr. CLINGER. I would say to the gentleman that is precisely what we are trying to do in this committee. I mean I hope you have heard what we have been saying, that we have been trying to take a look at these things, decide what we can do.

There are some areas of the government that are going to have to be increased in funding and not just slashed. I mean I think there are some areas where we are not doing the job.

I would point out that we are in the process now of taking a very hard look at the whole Superfund operation, because it has not worked. Too much of the money under the Superfund has gone to paying lawyers and into the court process, rather than in cleaning up sites.

So, it has been a failure in terms of accomplishing its primary job, which was to clean up these very dangerous sites that you have talked about.

I think we will have a substantial systemic reform of the Superfund program, hopefully make it much more effective in dealing with the very kind of crisis that you are talking about.

Mr. CONKLIN. All right. I will step down in a second. I just want to say something very specific about radioactive contamination. The States cannot deal with it. We need a Superfund program, and we need a Federal presence in handling these materials.

They are all over the country. They are in places that we do not even know about yet. The States simply, politically, cannot handle it. Before you eviscerate the Superfund program—and I would take issue with you on your analysis of it, Congressman.

I think that there was a very slow early learning curve, and we made a lot of mistakes in the management of the Superfund program early on.

More dollars are going to cleanup now, and if we could change the law so that potentially responsible parties could not turn it into a litigation-fest, we might actually make more progress in cleanups.

Those are the kinds of adjustments we need to consider before we knock the blocks out from under it by not funding it.

Mr. CLINGER. Thank you very much for your comment.

The gentleman from California.

Mr. HORN. I think the chairman has said it well in terms of what we are trying to do. Our concern is that most of the Superfund money, a majority of it, went to pay lawyers' fees, not to clean up sites.

We have continuously urged the administrator—and we are now doing some of that in specific legislative directives—to deal with the cleanup of the sites, and if there is more money needed, obviously that is where it ought to go. We agree with you. It is serious.

I do not completely agree with you that some States cannot handle the problem. The State of California is certainly competent to handle the problem, has expert people involved, so forth, but it is a national problem.

That is what the Superfund was for, and a number of us sitting here voted against the too-drastic cut that you started your comments with, and we hope that will be worked out in conference. We thought it did get on balance, but that had nothing to do with the Superfund.

The Superfund, we agree we just want site cleanup, not litigation fees.

Mr. CLINGER. Thank you very much.

At this point, we are prepared to ask our next witness, a very distinguished witness, to join us here at the witness table, and she is the Honorable Christine Todd Whitman, the Governor of the State of New Jersey, and I believe she is here, if the Governor could come forward.

I would like to ask our dear friend and host, Congressman Martini, if he would please introduce our distinguished witness.

Mr. MARTINI. Thank you, Mr. Chairman. Our next witness really needs no introduction, and it is my great delight and pleasure to introduce our Governor, Christine Todd Whitman, the 50th Governor of the State of New Jersey.

Governor Whitman has proven that she knows how to keep her promise, and her visionary leadership has helped to create a State government that is smaller, smarter, and less costly than it was just 2 years ago.

I can, frankly, think of no better individual in this country who can help this committee in the mission that we have undertaken, and that is to re-think, re-organize, and re-structure the Federal Government, and I am sure that, in her testimony here this afternoon, we will learn from her experiences in the challenges she was faced with, and still is, and the obstacles and the many successes that she has already had, and so, once again, Mr. Chairman and others, it is my great pleasure to introduce our Governor, Christine Todd Whitman.

Mr. CLINGER. Thank you very much.

Governor, it has been the tradition in this committee, we swear all witness, so as not to prejudice the rights of any witness, and if you would not object to that, I would ask you to raise your right hand.

[Witness sworn.]

Mr. CLINGER. Thank you very much. Let the record show that the witness responded in the positive.

Governor, again, welcome. We thank you very much for attending. I know you have a very busy schedule, a number of other competing events this morning and this afternoon, so we are very grateful for your willingness to come and testify before us.

STATEMENT OF CHRISTINE TODD WHITMAN, GOVERNOR, STATE OF NEW JERSEY

Governor WHITMAN. Thank you, Mr. Chairman. Thank you, Congressman Martini. I appreciate that.

To the members of the House Committee on Government Reform and Oversight, I want to thank you for allowing me to speak on a subject that really is very dear to my heart, making government leaner and smarter and more responsive to the needs of the people.

First, I would like to applaud you, Mr. Chairman and members of the committee, for holding this hearing at Montclair State University.

To find out what the American people really think, there is no substitute to getting out of Washington, DC, and coming to States like New Jersey, and I know you recognize that, or you would not be here today.

Your willingness to sound out citizens and State and local officials on re-structuring government for the 21st century sends a very clear signal that the 104th Congress is putting the taxpayers first and is serious about change.

Mr. Chairman, we do not have all the answers in New Jersey, but we are doing our level best to lay a foundation for creative, responsive, customer-focused government for the 21st century.

We are working to change the entire culture of the bureaucracy by instilling in the work force the drive to deliver quality service at the lowest possible cost, but we first have to determine where State government does and does not belong.

Where government does belong, we look to achieve ongoing savings and efficiencies. Where government does not belong, we are either getting out entirely or contracting services out to private firms and non-profit agencies.

We are not out to cut government just for the sake of cutting government. Our goal is simply to streamline government and control spending, because that is the best way to improve services.

Mr. Chairman, I am pleased with the progress that we are making toward reaching our goal. We have already twice cut the operating budget of State government.

In fact, we actually reduced overall spending under our first budget and kept overall spending growth in our second budget under the rate of inflation.

At the same time, we invested in education and transportation, increased aid to municipalities, and provided for the needs of our most vulnerable citizens.

There is no real mystery to how we accomplished that.

Simply put, we found efficiencies and pruned excesses throughout State government.

First, we eliminated two departments that had outlived their usefulness—the Department of Higher Education and the Office of the Public Advocate.

Second, our drive to find efficiencies, program by program, generated nearly a quarter-of-a-billion dollars in savings in our last budget.

Third—and this is the area that I would particularly like to focus on today—we are privatizing State services that can be delivered more efficiently by the private and non-profit sectors. Allow me to list a few examples for you.

We privatized 11 State-run day-care centers over the past 2 years. We anticipate that will save taxpayers $1.9 million this year.

We privatized seven day activity centers for the developmentally disabled at a projected savings of $2.3 million, and I would like to add that the private non-profit sector was already operating 79 centers under contract with the State.

What we were doing was not new; we just extended it to all of those services.

We anticipate that the privatization of the 23 motor vehicle offices will save the taxpayers $4.4 million. I understand the committee heard some testimony earlier today that indicated that, in fact, that was not perhaps the most successful of the privatization efforts.

At this point in time, it would be difficult and disingenuous of me to sit here and say that I can give you statistical evidence to the contrary, but anecdotal evidence that I have heard from those who have had to deal with motor vehicle agencies, both from people on the street and others who have been natural focal points for complaints, is that, in fact, it is working very, very well, and the time that people spend there, while always long in many instances, is no longer and, in fact, shorter in many instances, people have moved through the process better than they anticipated, and in fact, overall, what is a major, major undertaking has occurred in a relatively smooth fashion given the size of what we were doing.

Privatizing the last 10 percent of the custodial services of the capital complex saved us a million dollars.

That is just the beginning. We will continue the privatization process, where appropriate, because we are committed to providing the best value for every taxpayer dollar that we spend, and we are not just talking about one-time savings.

Rather, we anticipate saving and improving services over the long term, and that is really what we are about.

To be sure, privatization is not always the answer, but the competition that it engenders itself generates savings and efficiencies.

I would like to give you one example of what some might consider a failure but I consider a success because it generated its own savings.

We looked at privatizing a nursing home for veterans in Paramus.

The bids themselves, when they came in, were less than what we had anticipated in the savings, but during that competitive contracting process, the Department of Military and Veterans Affairs worked with the unions to craft an alternative plan that, when fully implemented, is expected to save the taxpayers $600,000 a

year while maintaining the high quality of care provided in that home.

That is a very significant victory in my book.

Quality is every bit as important as economy in what we are trying to do.

Indeed, government has the responsibility to ensure quality, continuity, and reliability in providing services for its citizens.

If we find out that contracting out a service imperils quality, we will stay in-house.

In any case, we are finding out that, when competition is in the air, government can often provide quality services at lower cost, and by focusing on cost-cutting issues like procurement technology, asset sales, and personnel reforms, we expect to find significant cost savings for the years to come.

We are just as vigilant in tracking down small savings, too, because they add up. We have recently reduced the fleet of State cars by 748 vehicles and downsized the cabinet fleet from luxury sedans to mid-size models, much to some of their complaints.

Significant as all these savings are, the only way to get a firm grip on government is to get a handle on labor and health costs.

We are determined to bring salaries and benefits of State employees more in line with the private sector, not because we take any pride or pleasure in doing so but because it is not government's place to offer salaries and benefits that are way above the norm for the same worker in the private sector.

That is why, Mr. Chairman, we are negotiating with our unions over a plan that will require State employees, under certain circumstances, to make co-payments for health-care coverage, which will save taxpayers millions of dollars, and we will continue to control our health-care costs.

We have received permission from the Federal Government to mandate managed care for over 400,000 individuals in our AFDC program. We estimate that will save us $25 million in 1996 and $44 million each year beginning in 1997.

Mr. Chairman, I have a number of examples of how we have streamlined government. I do not want to leave the impression, however, that we are turning our backs on our most vulnerable citizens.

To the contrary, we are working to serve our citizens in more humane and effective ways.

That is why, for example, we are moving our State's Medicaid patients into managed care. These citizens will be receiving now quality primary care where they should get it, in a doctor's office, not in an emergency room.

Our commitment to leaner, more humane government has also led us to create the group homes and community programs needed to begin closing developmental centers and mental hospitals.

This will give those who are ready the opportunity to live and work more independently in the community.

I could go on and on about what we are doing, but in the interest of leaner, smarter speeches to go along with leaner, smarter government, I will stop there and be happy to answer any questions you might have.

[The prepared statement of Ms. Whitman follows:]

GOVERNOR CHRISTINE TODD WHITMAN
TESTIMONY
HOUSE COMMITTEE ON GOVERNMENT REFORM AND OVERSIGHT
MONTCLAIR STATE UNIVERSITY
SEPTEMBER 9, 1995

Thank you, Congressman Martini.

Mr. Chairman and members of the House Committee on Government Reform and Oversight, thank you for allowing me to speak on a subject dear to my heart: making government leaner, smarter, and more responsive to citizens.

I would first like to applaud Chairman Clinger and Congressman Martini for holding this hearing at Montclair State University. To find out what the American people really think, there's no substitute for getting out of Washington, D.C., and coming to states like New Jersey. Your willingness to sound out citizens and state and local officials on restructuring government for the 21st century sends a clear signal that the 104th Congress is putting the taxpayers first. and is serious about change.

Mr. Chairman, we don't have all the answers in New Jersey. But we're doing our level best to lay the foundation for a creative, responsive, customer-focused government for the 21st century.

We're working to change the entire culture of the bureaucracy by instilling in the workforce the drive to deliver quality services at the lowest possible cost.

But we first have to determine where the state government does and does not belong. Where government does belong, we look to achieve ongoing savings and efficiencies. Where government doesn't belong, we are either getting out entirely or contracting services out to private firms or non-profit agencies.

We're not out to cut government for the sake of cutting. Our goal is simply to streamline government and control spending because that's the best way to improve services.

Mr. Chairman, I'm pleased with progress we've made in reaching our goal. We have already twice cut the operating budget of state government. In fact, we actually reduced overall spending under our first budget and kept overall spending growth in our second budget under the rate of inflation.

At the same time, we invested in education and transportation, increased aid to municipalities, and provided for the needs of our most vulnerable citizens.

There's no real mystery to how we accomplished that. Simply put, we found efficiencies and pruned excess throughout state government.

First, we eliminated two departments that had outlived their usefulness: The Department of Higher Education and the Office of the Public Advocate.

Second, our drive to find efficiencies program by program generated nearly a quarter of a billion dollars in savings in our last budget.

Third --- and this is the area I'd like to focus on today --- we are privatizing state services that can be delivered more efficiently by the private and non-profit sectors.

Allow me to list a few examples.

We privatized 11 state-run day care centers over the past two years. We anticipate that will save taxpayers $1.9 million this year.

We privatized 17 day activity centers for the developmentally disabled at a projected savings of $2.3 million. I should add that the private non-profit sector was already operating 79 of these centers under contract with the state.

We anticipate that the privatizing of 23 motor vehicle offices will save the taxpayers $4.4 million.

And privatizing the last 10 percent of custodial services in the Capitol Complex saved $1 million.

This is just the beginning. We will continue the privatization process because we are committed to providing the best value for every taxpayer dollar we spend. And we're not just talking about one-time savings. Rather, we anticipate savings and improving services over the long term.

To be sure, privatization isn't always the answer. But the competition it engenders invariably generates savings and efficiencies.

Let me give the Committee one example. We looked at privatizing the a nursing home for veterans in Paramus. While the bids themselves did not produce ~~major~~ the anticipated savings, the competition did.

During the ~~Pursued into~~ competitive contracting process the Department of Military and Veterans Affairs worked with the unions to craft an alternative plan that, when fully implemented, is expected to save the taxpayers $600,000 a year while maintaining the high quality of care. That's a significant victory in my book.

Quality is every bit as important as economy. Indeed, government has the responsibility to ensure quality, continuity, and reliability in providing services to its citizens. If we find out that contracting a service out imperils quality, we will stay in house.

In any case, we are finding out that when competition is in the air, government often can provide quality service at lower costs. And by focusing on cross-cutting issues like procurement, technology, asset sales, and personnel reforms, we expect to find significant cost savings for years to come.

We're just as vigilant in tracking down the small savings, too, because they add up. We recently reduced the fleet of state cars by 748 vehicles and downsized the Cabinet fleet from luxury sedans to midsize models.

Significant as all these savings are, the only way to get a firm grip on government is to get a handle on labor and health care costs. We are determined to bring salaries and benefits of state employees more in line with the private sector --- not because we take any pride or pleasure in doing so, but because it is not government's place to offer salaries and benefits that are way above the norm for the same work in the private sector.

That is why, Mr. Chairman, we are negotiating with our unions over a plan that will require state employees to make copayments for health care coverage, which will save millions of dollars.

And we will continue to control our health care costs. We have received permission from the federal government to mandate managed care for over 400,000 individuals in our AFDC program. We estimate that will save us $25 million in 1996 and $44 million each year beginning in 1997.

Mr. Chairman, I have given a number of examples of how we have streamlined government. I don't want to leave the impression, however, that we are turning our backs on our most vulnerable citizens.

To the contrary, we are ~~moving~~ working to serve our citizens in more humane and effective ways. That is why, for example, we are moving our state's Medicaid patients into managed care. These citizens will receive quality primary care where they should get it -- in the doctor's office.

Our commitment to leaner, more humane government has also led us to create the group homes and community programs needed to begin closing developmental centers and mental hospitals. This will give those who are ready the opportunity to live and work more independently in the community.

I could go on and on about what we're doing, Mr. Chairman, but I believe in leaner, smarter speeches, so I will close now and take your questions.

Mr. CLINGER. Thank you very much.

I would first turn to our host and colleague, Mr. Martini.

As stated at the outset, I believe the Governor has about 15 minutes left to respond to questions. So, gentlemen, please keep your questions brief.

Mr. MARTINI. Thank you again, Chairman Clinger.

Thank you, Governor, for being here today. We understood your busy schedule, but I think it was very helpful and important for us that you are here, and I guess I view this Congress and this committee as embarking on a mission on which you are already 2 years down the road and have accomplished great success already and still face considerable obstacles and challenges, and I think that is the question I would like to ask you.

You have already undertaken to eliminate several departments and some State programs, and perhaps you can help us by telling us what lessons we can learn, in a very general sense, from your experience in being 2 years further ahead in this process than we are at this time?

Governor WHITMAN. Well, Congressman, I think the most important thing is the preparatory work that we did in-house to reach the decision of where we wanted to, let us, eliminate a department.

Where we have downsized is not because we just wanted to downsize.

I have constantly avoided that usual out of saying, well, we are just going to cut by 15 percent or cut by 20 percent, because very often that leaves you in a position where you have cut the heart out of one program, but you still have people there, but they are not able to deliver services, and then others that are just huge, you have not made the kind of impact you need to make.

So, we have tried to make each of those decisions based on programmatic need, and because of that, we have been able to stay the course, and I think that is the other very important part.

What we have been trying to do here, what you are trying to do in Congress, is monumental.

There are a lot of vested interest groups that have made a living off confrontation, have made a living off the way the system is now, who will object vehemently, not always in the best interest of the constituency or the country as a whole, and you need to be able to stay the course on this.

The other side of that, though, is to recognize that many of them do have very good points, they have been around the process a long time, they have something to offer, and to the extent that you can bring them into the process at the front-end, you will be better off in the long-term.

Mr. MARTINI. Thank you very much.

Mr. CLINGER. Governor, obviously, one of the things that is involved in what you are trying to do and what we are trying to do is the massive amount of change, and that always concerns people, frightens people.

I think change is something that gets people very concerned, and obviously, part of this is the human equation. What happens to people who will be displaced, perhaps, or have been displaced as a result of changes going on in the government?

How have you handled that? Have you made an effort to try to ensure that they are not going to be just thrown out in the cold?

Governor WHITMAN. We have done a number of things.

Where we have privatized, we have tried to write the right of first refusal into the contract for current employees.

That was one of the problems we hit when we ran into the privatization of the Division of Motor Vehicles, because at that point, the union did not want us to write that into the contract, we were not able to guarantee those employees the right of first refusal, but we try to do that whenever we can.

The other thing we do is enhance our—we have been in a period of enhancing our re-training programs, working with the Department of Labor and the Department of Personnel with those who are going to be subject to change, and we have also used—we have a system, as I am sure is true in most places, given the union setup, of bumping rights, which means that someone can move down the process and they move somebody else down below them and sometimes move them out.

It is frustrating at times, because people end up in positions for which they have not been trained or that they have not done in a long time, and you have lost some people that you did not intend to lose.

What we have tried to is look throughout government always and find similar positions for people who are being bumped and try to move them within government, so that we do not have to put them out.

For those for whom there are not going to be other positions, we have tried to work very closely with the private sector to find them jobs and with the Department of Labor for re-training.

Mr. CLINGER. Now I recognize for a question the gentleman from New Mexico, Mr. Schiff.

Mr. SCHIFF. Governor, just because time is short, I just want to say I appreciate your being here and appreciate your contribution to this hearing today. Thank you.

Governor WHITMAN. Thank you, Congressman.

Mr. CLINGER. Thank you.

The gentleman from California, Mr. Horn.

Mr. HORN. Thank you very much for coming, Governor. I remember your testimony before our committee in Washington. You were a most impressive witness and still are.

Governor WHITMAN. Thank you.

Mr. HORN. So, good luck, despite all the pressures.

Local officials, not only in New Jersey but, I think, in every State, worry about how much the States will take off the top of Federal block grants before that money gets down to the county/city level and carries out particular block-grant programs.

What is your feeling as to the percent that the State ought to have for administration and to what extent the State would be offering any duplicate programs, rather than let the counties and the cities offer those programs?

Governor WHITMAN. Congressman, I would be very reluctant to try to put an overall percentage on what the State should take off any kind of money that comes through, because it really depends on the program.

There are some areas where the State should be more involved and others where they should be less and require very little money.

We, in fact, are trying a whole new approach as we look at our urban centers, because we feel very strongly that what has been the traditional method of trying to solve urban problems has not been successful, part of that being that State government has written very proscriptive program guidelines for people to come and apply for dollars, and we have found that people, in many instances, have gotten very good at writing grant proposals, even though the grants are not what they need, do not service the population they need to service, but they write them anyway, because then at least they will get some money that they can use for administrative costs somewhere else, perhaps.

What we have done is taken and really pooled all those dollars, and we have said to the communities—what we are really looking for is involvement by citizens.

We have told the churches and the citizens groups, neighborhood groups—they come up with a strategy of what they feel they need in their community, get their city or local government to buy into that, and then come to the State government, and I have formed a committee of the whole of my cabinet—they pool their dollars and make dollars available now in ways that they have not been before, with less strings attached and less management from the State level.

That, of course, is what we would be looking for from the Federal Government, as we move through this process, and that is why I say I would not want to put a fixed percentage on anything, because where we can get out of the process as a State, we will.

Mr. CLINGER. I now recognize the gentleman from Virginia, Mr. Davis, for one question.

Mr. DAVIS. Governor, thank you very much for being here.

I wanted to ask a question on using advance technology, information systems, and that kind of thing. How much of a help has that been to you? Where have you made strides? Did you find the State, when you came in, was not up to the current levels of technology?

Governor WHITMAN. Yes, unfortunately. We found that the State, in fact, had moved backward given what was happening in the Nation, that we were not in a good position to utilize modern technology. We are just now coming up on the internet, we are just now getting up on E-mail.

We are just now really starting to take advantage of the savings that are out there for us by using modern technology, but that certainly is going to feature very prominently in some of the new overhauls that we are talking about doing with some programs.

For instance, the electronic birth certificate for infants, which will allow us to know instantaneously when a child goes in for a follow-up check-up what shots they have had, what their history of immunization is, what their medical history has been—those kinds of things—welfare reform and other areas—we believe modern technology is going to allow us a great deal of flexibility and result in a lot of savings.

Mr. DAVIS. Have you looked at wire transfers and payments and those kind of things? We are just getting into that.

Governor WHITMAN. We are doing some of that, but we are not doing nearly as much as we will be doing in the future, because we just have not been taking advantage of everything that was available out there.

Mr. DAVIS. Thank you.

Mr. CLINGER. Finally, I would recognize the other gentleman from New Jersey, Mr. Zimmer, for a question.

Mr. ZIMMER. Thank you.

Thank you, Governor, for helping to make New Jersey a model and an inspiration for us at the Federal level.

You began by saying that the initial decision that you have to make in government is between programs that the government should be doing, where government belongs, and where it does not belong, and you mentioned a couple of criteria—obviously, cost and quality of service in determining where government belongs and where it does not belong.

In the question of privatization, what other criteria do you look at? Right now, there are a whole range of functions in the Federal Government that we are considering privatizing and some that maybe we are not considering that we should. How do we make the cut?

Governor WHITMAN. Well, what we have done, Congressman, is to look and see is there—there are some basic functions, obviously, that government can and must provide and a level of service that they must assure is there for those who are most needy, and that, obviously, is the overriding concern that we have when we look at anything, but as we make our determination, we take and look and see are there outside providers, are there for-profit or non-profit that are providing the same service?

We like to write—as we write the request for proposals, we write in standards of maintenance, that they have to maintain certain standards. In some instances, the State maintains oversight. In other instances, the State will really just do occasional reviews.

We insist on the same level of service that is currently being provided, or a better level, to ensure that the people are being treated as they should be treated, but the bottom-line determination is made, and you really only know this as you go through the process and put out the request for proposals, see what kind of interest there is out there, what kind of services can be provided from the private sector.

We make the determination based on are we saving the taxpayers' dollars and can we guarantee that the level of service will continue to be at a standard that we deem to be the acceptable standard that we want to see.

We are looking, really, at everything. There is nothing that has been completely written out.

There are some areas where we can look at what has happened in other parts of the country and see that it works better here or less well in this area than in another area, but really, everything is on the table for review, and we make the determination, as we come down, as we did with Paramus, of what are the savings going to be, are they real savings, and can we guarantee the level of service that we require as a State and that the people of this State deserve?

Mr. ZIMMER. Thank you.

Mr. CLINGER. Governor, we do not want to impinge anymore on your time, and you have been very gracious in coming and testifying on a Saturday morning, and I know you have a child going to college this weekend and so forth, but I want to assure you that this committee has been charged with, I think, a very profound and very important function, which is to undertake some of the things that you are doing at the State level at the Federal level.

We hope that we can continue to work with you as we work through this process over the next years, particularly on the issue of devolution: What can we devolve back to the States and to the local level, what must be maintained at the Federal level?

That is a very complex and very difficult question, and we really need your input and your advice as we go down the road. So, I hope we can count on that.

Governor WHITMAN. Thank you, Mr. Chairman.

I would be honored, and the only thing that I would say as you look at your task is, again, that the recognition—I believe that the Federal Government, as a State government, has the responsibility to ensure some basic standards of quality of service, and I do not think that there are any of us as Governors, much as we argue for maximum flexibility as we go through this process and, where there are block grants, for maximum flexibility, I do not think there are any of us that do not expect that the Federal Government will hold us to standards that are appropriate and are as broad as possible but still will guarantee the people of this country that they are getting the kind of government that they deserve.

Mr. CLINGER. That is the fundamental question: How do we maintain the standards and yet provide the flexibility?

Governor WHITMAN. I think we can do it, but we can do it only if we work together.

Mr. CLINGER. Governor, thank you again very, very much for being with us.

Governor WHITMAN. Thank you all.

Mr. CLINGER. I would now like to introduce our final panel of this hearing and ask them to come forward, if they would, please.

I now would like to move to the introduction of our next panel, and they are:

Mr. Michael Berkin, the senior vice president for performance and service quality at Dun & Bradstreet Information Services.

Welcome, Mr. Berkin. We appreciate your participation.

Mr. Frank Sweeney, vice president and controller of the avionics division of ITT Defense and Electronics, Inc., part of the ITT Corp.

Dr. Irvin Reid, our host, president of Montclair State University.

Again, thank you, Dr. Reid, for the great generosity that you have shown in having us here today.

Mr. Len Lauer, the vice president of large business services for Bell Atlantic–New Jersey.

Finally, Mr. John Anderson, director of procurement for the Public Service Electric & Gas Co.

Again, I would emphasize that these hearings are not just focused on local or State government activity in the area of downsizing and reforming and re-inventing themselves, but we really feel that we can get many, many helpful suggestions and

thoughts from the private sector, and we should be able to replicate some of the things that you have been able to do in what we are trying to do in government.

As you heard me say, gentlemen, it has been the tradition of this committee that we swear all witnesses so as not to prejudice any witness. So, if you would not mind rising——

[Witnesses sworn.]

Mr. CLINGER. Let the record show that the witnesses all answered in the affirmative.

Shall we start with you, Mr. Berkin?

STATEMENTS OF MICHAEL BERKIN, SENIOR VICE PRESIDENT, PERFORMANCE AND SERVICE QUALITY, DUN & BRADSTREET; FRANK SWEENEY, VICE PRESIDENT AND CONTROLLER, ITT AVIONICS; IRVIN D. REID, PRESIDENT, MONTCLAIR STATE UNIVERSITY; LEN LAUER, VICE PRESIDENT, SALES, BELL ATLANTIC–NEW JERSEY; AND JOHN E. ANDERSON, DIRECTOR OF PROCUREMENT, PUBLIC SERVICE ELECTRIC & GAS CO.

Mr. BERKIN. Mr. Chairman and members of the committee, good afternoon.

Again, my name is Michael Berkin, and I am the senior vice president of performance and service quality at Dun & Bradstreet Information Services, located nearby in Murray Hill, NJ.

I would like to thank you for the opportunity to share with you our experience in the area of re-structuring. We applaud the committee and the work being done by its staff in this important area.

It is our hope that you will find our approach useful as you re-evaluate the scope and function of the Federal Government.

Like so many other service businesses, Dun & Bradstreet Information Services entered this decade feeling the impact of rapid advances in technology, the improvement in the price/performance of that new technology, and the resulting competitive pressure to reduce costs while improving service quality.

Added to those forces was the ever-present need to increase value to shareholders.

Reduced to the simplest terms, we had to find new ways to do everything faster, better, and less expensively.

Fortunately, at that time, we had just completed a self-assessment of our entire organization using the criteria for the Malcolm Baldrige National Quality Award.

We felt that the feedback from this self-assessment would provide the fuel for front-line teams of D&B employees to improve the way we conducted business throughout our organization.

I am sure most of you know that the Malcolm Baldrige National Quality Award criteria, developed under the leadership of the NIST organization within the Department of Commerce, provides a comprehensive framework through which business leaders drive a system of well-integrated processes designed to increase customer value and company performance.

As a three-term member of the Board of Examiners for the Malcolm Baldrige National Quality Award, I have developed a deep appreciation for the effectiveness of this framework for driving performance improvement.

Because each area of the award criteria has been assigned a specific point value, the framework provides insight into the relative importance of each area in contributing to high performance.

In a constrained resource situation, this information is useful for prioritizing the deployment of resources in a manner that yields maximum value.

Now, by contrasting these relative point values with our performance level as indicated by the self-assessment, we were able to create a matrix for making resource decisions to right-size our business.

We felt that areas where we were performing exceedingly well but which were relatively less important in driving customer value provided opportunities for resource reductions.

Conversely, areas where we were performing less well but which were critical in importance to our customers' perception of value were opportunities for investing in additional resources, and so on, as defined by this matrix.

We then used a series of problem-solving techniques to focus teams of D&B employees on more effective and efficient processes in very targeted areas.

In all cases, employees were given the right kind and amount of training, no more and no less than what was required, to harvest the specific opportunity they were addressing.

As a result of the efforts of more than 2,000 teams convened in our business over the past 5 years, we have reduced the number of physical locations from which we do business by 47 percent and reduced the number of employees by 26 percent.

During that same period, while our revenue has increased by only 5 percent, our operating income has improved by 38 percent.

We have learned from this experience that the Baldrige award criteria provide a useful way to target improvement efforts.

We have learned that those employees involved in a given process are best suited to improve it and that very targeted training, applied in a timely fashion, is most effective in increasing the capacity and readiness of employees to successfully manage change.

Our recommendation is that this committee ask Curt Reiman and his staff at NIST, who have already adapted the Malcolm Baldrige National Quality Award for us by the education and health-care industries, to similarly adapt the criteria for use by government at all levels.

Once created, we recommend that the Federal Government use those criteria to conduct a self-assessment and pursue the opportunities identified by that assessment through improvement teams.

Mr. Chairman and members of the committee, thank you again for this opportunity.

Mr. SCHIFF [presiding]. Thank you very much, Mr. Berkin.

Mr. Sweeney, before recognizing you, let me say that, if the witnesses and the audience have never seen a hearing before Congress before, I know that the comings and goings of Members during the day is a little bit disconcerting, but Members have to call Washington and see what is going on or call back to their respective districts and just stay in touch with a number of things.

Actually, the most important person at any congressional hearing is the gentleman in the white coat who does not say a word here,

and he is taking down completely every word that is said here, and the entire record is made available, in due course, to the entire Congress.

So, I just wanted to make sure you understand how we work here.

With that, Mr. Sweeney, you are recognized.

Mr. SWEENEY. Thank you.

Good morning. It is my pleasure to be here today. I certainly endorse the mission of this committee, and I feel there are definite parallels in downsizing and cost reduction that is taking place in industry and government.

The company I represent is ITT Avionics, which is located a few miles from here. It was established in the 1940's as ITT Federal Laboratories and has been a major employer in the area since that period.

At its height, this entity employed close to 4,000 employees on an 88-acre campus and filled 4 buildings. Congressman Martini has visited us several times.

We recognized the decline in business coming near the end of the 1980's, and then the cold war ended even more abruptly than was expected. There was every indication that the defense budget would continue to be reduced and procurements would become more and more competitive.

Determined to stay a viable entity, ITT Avionics did several things.

One of the first issues we addressed was the volume of future business and what facilities would be required to support that level of activity. Based on our projections, we developed a facilities consolidation plan, which was initiated in 1991 and completed in 1992.

This project reduced the number of buildings occupied from three to one and generated an annual savings of approximately $3 million. One of the excess buildings was sold, the second is near contract, and excess acreage around the remaining building is near contract for sale, also.

The building consolidation project also resulted in the identification of a significant amount of surplus machinery and equipment.

With the help of a professional auction company, we converted those assets into cash, which helped to finance the building consolidation project and reduce depreciation expense.

Looking further, our highest expense, second only to labor, was the cost of computing. With two other divisions of ITT, Defense and Electronics, we established the Consolidated Business Data Processing Center in Fort Wayne, IN.

We further reduced data-processing costs by migrating from an IBM mainframe environment to an AS–440-based platform.

We then standardized the financial and operating software systems used by the three divisions, which enabled applications programming support to be centralized and significantly reduced.

This data-processing consolidation project is nearly complete and will save ITT Avionics more than $2 billion per year.

Based on the data-processing consolidation, we have initiated an administrative-services consolidation, as well. Consolidation of payroll has been completed, travel expense accounting is near completion as are accounts payable, and various HR functions.

Avionics has also initiated a management re-structuring program to streamline and flatten management functions to four levels and has reduced head-count commensurate with our reduced level of business.

From the president of the division to the base-line worker, the span of control has increased limiting the levels of the company to four.

The division's compensation program has also changed. Annual merit increases were eliminated for a large percentage of employees, and incentive bonuses were provided in its place.

Those incentive payments were tied to various targeted financial performance levels, and as the company attains those levels, savings are shared with the employees.

ITT Avionics also adopted the Integrated Product Development team approach in the management of its programs. IPD has focused on reducing cycle time from product design to production. The functional or stove-pipe organizational model has given away to cross-functional teams.

Functions such as engineering and operations now serve as resource pools and coaches.

As an outgrowth of the IPD initiative, ITT Avionics had made a significant investment in information technology, local area networks, Pentium PCs, and upgraded engineering workstations.

This upgraded capability has provided a tenfold improvement in data-processing efficiency.

Employees are also receiving additional training to maximize and increase productivity.

Numerous other steps were taken to reduce cost and improve performance. Some manufacturing activities, such as building printed circuit-boards have been out-sourced. We simply found other companies who could do it better and cheaper.

Maintenance activities, such as janitorial services and security, have been out-sourced, as well.

ITT Avionics has recently introduced the use of procurement credit cards. Studies have found the average cost to a commercial concern for issuing a purchase requisition followed by a purchase order and processing an invoice to exceed $100.

Procurement credit cards are now widely used by many companies for small-dollar purchases, and that processing cost has been eliminated.

Whether you call it down-sizing, right-sizing, or re-structuring, the process is painful and precarious, but the alternatives are even more onerous.

My views on what the government could do as we approach the 21st century:

We must live within a balanced budget. Out-sourcing must continue to be focused on and be done where it makes financial sense.

Fifedoms within the government must be eliminated.

Increased productivity through training and hiring the best people is required. There are thousands of high-caliber middle-management people that have become down-sizing victims.

The government should pay for performance. Avionics modified its merit increase program, as I had previously stated, and the government should focus on similar programs.

Also, the government should continue to emphasize family values. A corporation can no longer be a surrogate parent to its employees, and the government cannot be a surrogate parent to its citizens.

Thank you.

[The prepared statement of Mr. Sweeney follows:]

ITT

ITT Avionics

ITT Defense & Electronics

Henry J. Driesse
President & General Manager

September 6, 1995

The Honorable William F. Clinger, Jr.
Congress of the United States
House of Representatives
Committee on Government Reform and Oversight
2157 Rayburn House Office Building
Washington, D.C. 20515-6143

Dear Congressman Clinger:

Downsizing, rightsizing and restructuring are words which are often used to describe the process which most businesses today have embraced as the best path to survival and success. ITT Avionics, a Division of ITT Defense and Electronics, Inc., has walked this path for the last five years and will continue to walk this path for the foreseeable future.

At the close of the 1980's, ITT Avionics Management identified a declining business base primarily brought on by the close of the cold war. Since our primary customer was the Department of Defense, we felt that our existing organization structure and business processes would require significant change to support the introduction of commercial products and allow us to be competitive in a declining defense market. ITT Avionics was determined to survive and change we did.

One of the first issues we addressed was the volume of future business and what facilities would be required to support that level of activity. Based on our projections, we developed a facilities consolidation plan which was initiated in 1991, and completed in 1992. This project reduced the number of buildings occupied by ITT Avionics from three to one, and generated an annual savings of approximately $3.0 million. One of the excess buildings was sold, the second is near contract, and excess acreage around the remaining building is near contract for sale also.

The building consolidation project also resulted in the identification of a significant amount of surplus machinery and test equipment. With the help of a professional auction company, we converted those assets into cash which helped to finance the building consolidation project and reduced depreciation expense.

100 Kingsland Road, Clifton, NJ 07014-1998, Telephone (201) 284-3178

Avionics was also determined to improve its business processes through TQM, reengineering and consolidation. Working with two other Divisions of ITT Defense and Electronics, Inc., we established a consolidated business data processing center in Fort Wayne, Indiana. We further reduced data processing costs by migrating from an IBM mainframe environment to AS-400 based processing. We then standardized the financial and operations (MRP II) software systems used by the three Divisions which enabled applications programming support to be centralized and significantly reduced. This data processing consolidation project is nearly complete and will save ITT Avionics more than $2.0 million per year. Building on the data processing consolidation, we have initiated an accounting consolidation, also based in Fort Wayne, Indiana. Consolidation of payroll has been completed, travel expense accounting is nearly complete, and accounts payable is scheduled for completion later this year.

With the knowledge that "computing" was the highest non-salary related indirect expense, ITT Avionics next focused on its engineering or technical computing. This DEC/VAX network, with its integrated workstations, was and is the primary engineering tool of the Company. ITT Avionics and its sister Division, Aerospace/Communications, consolidated the technical computing operation into a shared service. Savings in excess of $1 million per year were achieved through reduced maintenance, hardware and software seats.

Avionics has also initiated a management restructuring program to streamline and flatten management functions to four levels and has reduced headcount commensurate with our reduced level of business. The Division's compensation program was also changed. Annual merit increases were eliminated for a large percentage of employees and incentive bonuses were provided in its place. Those incentive payments were tied to various targeted financial performance levels.

ITT Avionics also adopted the Integrated Product Development (IPD) team approach in the management of its programs. IPD is focused on reducing cycle time from product design to production. The functional or stove pipe organizational model has given way to cross functional teams. Functions, such as Engineering and Operations, now serve as resource pools and coaches.

As an outgrowth of the IPD initiative, ITT Avionics has made a significant investment in information technology (local area networks, Pentium P.C.'s, and upgraded engineering workstations). This upgraded capability has provided a ten-fold improvement in data processing efficiency. Employees are also receiving additional training to maximize the increased productivity. The State of New Jersey has agreed to provide a grant to support a part of this training activity.

Numerous other steps were taken to reduce cost and improve performance. Some manufacturing activities, such as building printed circuit boards, have been outsourced, as has some service activities, such as janitorial services and security.

ITT Avionics has recently introduced the use of procurement credit cards. Studies have found that the average cost to a commercial concern for issuing a purchase requisition, followed by a purchase order and processing an invoice to exceed $100. Procurement credit cards are now widely used by many companies for small dollar purchases and that processing cost is eliminated.

In 1994, ITT Avionics received two large commercial contracts to supply its ALQ-165 Airborne Self-Protection Jammer (ASPJ) to the Air Forces of Finland and Switzerland. This has required the Company to adopt many commercial practices and standards in replacement of MIL-Spec and Department of Defense requirements. Change has been constant. We expect our penetration into foreign commercial markets to continue.

Whether you call it downsizing, rightsizing or restructuring, the process is painful and precarious. But the alternatives are ever more onerous.

In today's economic conditions, it is imperative that management maintain an acute sensitivity to its environment. Management must monitor economic trends, competitors' activities and, most of all, our customers' needs and perceptions. Government, too, must be as sensitive as the corporate world because Government's actions or inactions affect every aspect of life.

The Government of the 21st Century must live within a balanced budget. Privatization of services should take place where it makes financial sense. "Out of the box" thinking must take place in order to reduce cost yet meet the needs of society.

I have every confidence that we will get there.

Very truly yours,

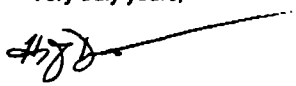

Henry J. Driesse
President

HJD:as

Mr. SCHIFF. Thank you, Mr. Sweeney.

Let me say, before going to Mr. Reid, that, without objection, all of your written statements for this panel and for any previous panel will be made part of the record.

So, if, in trying to comply with the time limits, you skip over some things, if you have provided written testimony, the entire written testimony will be part of the record.

With that, Mr. Reid, let me join my chairman in thanking you for hosting us here today, and you are recognized, sir.

Mr. REID. Thank you very much, Mr. Chairman.

I appreciate this opportunity to welcome you to Montclair State University, the second-largest institution of higher education, public or private, in the State of New Jersey.

We have nearly 10,000 undergraduate students and approximately 4,000 graduate students.

On behalf of our Board of Trustees, the employees and students, I thank you, Chairman Clinger and Mr. Schiff, for honoring our university with your presence today.

Mr. SCHIFF. I do not mean to interrupt, but I just realized we made a mistake, Dr. Reid. Please forgive us for that.

Mr. REID. As Henry Kissinger once said, he does not stand on protocol; "His Excellency" will be fine.

I also want to thank Congressman Martini.

Mr. SCHIFF. I am sorry. I mean no rudeness here, Your Excellency, but would you pull the microphone a little bit closer, Dr. Reid, please?

Mr. REID. I also want to thank Congressman Bill Martini for his role in bringing this hearing to Montclair State and to the people of this region.

I applaud the Congressman's effort to develop an open dialog on this and other vital issues that concern all of us here in New Jersey.

Also, I thank you for the opportunity to speak with you briefly about the success of re-structuring at Montclair State University and throughout the higher education sector in New Jersey.

Since the 1980's, higher education in New Jersey has been undergoing a gradual process of decentralization and autonomy. In some respects, of course, we are essentially decentralized. Our departments have a high degree of independence in making personnel and curriculum decisions. Our campus is self-governed to a significant degree through a plethora of academic and staff committees that include student involvement. Our University Senate is assertive and effective.

Much of this essential autonomy derives from the cherished tradition of academic freedom, which allows our faculty the necessary liberty to teach and conduct research as they see fit. Someone I know once compared professors to small-business people, and as someone with experience in both academe and business, I believe that comparison is very apt. Academics value their freedom and resent interference—especially from university presidents, I might add.

Unfortunately, our academic freedom was never matched by a corresponding institutional autonomy. The State college sector in New Jersey for too long was subject to a process of bureaucratic

centralization that emanated from the Department of Higher Education in Trenton. This began to change in the 1980's, under the administration of then-Governor Thomas Kean, when the State enacted autonomy legislation for the State colleges.

Under the leadership of Governor Christie Whitman, we have moved forward once again toward meaningful autonomy. The Higher Education Restructuring Act of 1994 provides considerable autonomy to colleges and universities to better position themselves in service to the State of New Jersey. Many decisions formerly made by the Board of Higher Education have been decentralized to local governing boards. This devolution of power that the Governor spoke about earlier has gone a long way toward charging colleges and universities with the authority to respond effectively to the needs of respective constituencies, while ensuring affordability, accessibility, and quality.

Decentralization is crucial if we are to meet the many challenges that face us. Higher education in New Jersey is a large enterprise. At Montclair State University, we employ more than 1,100 employees, 430 of whom are full-time faculty members, in addition to a large number of adjunct professors and student workers. The cost of living in the metropolitan New York area, in which we are located, is substantially higher than in south Jersey. We are affected more by economic, social and cultural changes than are institutions in the western part of the State. Our clientele is very different from that at urban institutions.

In fact, since we have become a teaching university, there are really no other institutions in the State with which we share much comparability. Our university faculty are here to teach, with less emphasis on pure research than at some other institutions. The population we serve demands more graduate and professional programs than are offered at the eight State colleges.

Quite simply, we need to be able to make the decisions that affect our own future. We understand our mission and identity, and we know the direction we need to take. We know, too, that in this era of cutbacks and cost controls, we must become more effective and efficient and we must reach out to the private sector for support. While we believe higher education is an excellent public investment, we understand that government resources are limited and constrained. Our decision to embark on an ambitious capital campaign reflects this reality.

Along with greater institutional autonomy, we are making other changes on campus that will make the university more efficient and cost-effective. For example, we recently provided each of our faculty members with a computer and greatly expanded the number of computers available to our students. While the investment has been considerable, we believe it will foster much more extensive interaction between faculty and students and among students and their fellow students. We also believe there are certain tasks within the learning process that computers can perform very efficiently, allowing faculty more time to interact personally with students. As a result, we are in the process right now of redefining the role of faculty members on a computerized campus.

This is a brief overview of some of the exciting things happening in the higher education sector. We are trying to re-invent higher

education in the same fashion that many of you are trying to reinvent government.

In closing, let me say that the outcome of a restructured Federal Government will not and should not, in every case, be smaller government. Your principal goal should be smarter government. In some cases, this will result in smaller government, and in other cases, it will mean more privatized services. In other instances, I suspect we will see partnerships between the Federal Government and other institutions that assume a stewardship for the general welfare of the American people. And I dare say that, in some instances, we will have more government.

In restructuring government, we should not be narrowly committed to considerations of size. We should be guided by standards of relevance, efficiency, reduced intrusiveness, and individual responsibility. We should support and assist the valuable and necessary activities of State and local governments, private agencies, and community organizations.

We should be devoted to strengthening families and encouraging good citizens, and if these are your goals, then you will achieve the best of all worlds—government of the people, by the people, and for the people.

Thank you very much for this opportunity.

Mr. SCHIFF. Thank you, Dr. Reid, and again, thank you for letting us use your facility here today.

Mr. Lauer.

Mr. LAUER. Thank you, Mr. Vice Chairman, Mr. Chairman, Congressman Martini, and all members of the committee. I very much appreciate the opportunity review Bell Atlantic's views on the potential of technology to aid in the development of a 21st-century government.

Although the motivations of business and government may be distinctly different, our goals are similar. We both need to manage information and large organizations. We both need to leverage technology to help manage our organizations and to deal with the three following fundamental changes in business and government:

First, the growing impact of information; second, the impact of digitizing information; and third, the convergence of technologies, which will create new distribution channels of information.

First, a key change for all of us in business and government is that commerce is being driven more and more by the flow of information and less and less by the flow of goods.

It is estimated that, within the next 10 years, about 80 percent of all jobs will be involved in some way with the preparation and delivery of information, rather than hard products.

Second, a critical change affecting all of us is digitization. Digitization, the ability to represent all media as zeros and ones, is proceeding relentlessly, resulting in a technology convergence of audio, video, and graphics.

The rapid growth of the internet visibly demonstrates the liberating power of digitization. Just think of all the paper generated by government and how much time and money could be saved if the same information were digitized.

The third important change impacting business and government is the convergence of technologies.

This mixing of communications services has resulted in an explosion of new products, services, and options, loosely grouped together under the moniker of multi-media services that blend together video, audio, voice, and data in a wide variety of new and creative ways.

The businesses that are proving to be the best competitors in this new environment are those that can quickly adapt to change, can maximize productivity, and meet the unique needs of diverse customers.

So, what is the secret? If I were to name one single skill that is key to productivity and adaptability, it would be information management, the ability to leverage technology, to acquire and process information, to make quantum improvements in customer service and productivity.

Clearly, a state-of-the-art network is not merely an asset in today's competitive world; it is a necessity. Within Bell Atlantic, we are using technology aggressively, the same technology we sell, to better serve our customers.

We are constantly upgrading our public switched network to provide better and new services to our customers. We also use technology within Bell Atlantic to enable our employees to have access to the information they need to better serve our customers.

We aggressively use video conferencing, instead of traveling, to save a significant amount of travel expenses and employee productivity time. We use corporate-wide electronic mail, digitized corporate-wide voice mail, and local area networks to access internal company data bases, the internet, and commercial electronic data bases.

In fact, our employees can access our corporate electronic mail and voice mail systems and many of our local area networks from virtually everywhere, and as our work force becomes more diverse, we help our employees balance their work and home responsibilities.

We have found that telecommuting has increased productivity and morale while lowering turnover and absenteeism. Today, over 2,000 Bell Atlantic employees telecommute from their homes.

We are continuing to improve our operations through a corporate-wide self-examination to sharpen our focus on customers and streamline our operations.

A series of teams within our corporation are charged with re-engineering our most critical business processes, making recommendations based on our customer's perspectives, without regard for functional or organizational boundaries, and then implementing these recommendations.

We feel it is essential because of the constantly changing market and customer requirements.

County and local governments in New Jersey have begun using technology to streamline their operations and to do more with shrinking resources.

Next door, in Hudson County, NJ, which is using video-conferencing technology to arraign individuals charged with a crime, the county has saved over a million dollars in overtime and transportation costs and a dramatic reduction in the backlog of cases in the last 2 years since they have been using video arraignment.

During the past year-and-a-half, the city of Bridgeton, NJ, has been using video surveillance in its downtown business district and in a public-housing facility to monitor criminal activity.

According to the town's chief of police, crime has substantially dropped in the business district and in the public-housing facility.

School districts in five New Jersey counties—Morris, Bergen, Union, Hudson, and Burlington counties—have formed county-wide consortiums to build distance learning networks to use interactive video to enable students to take course not normally available in their own schools.

These examples from various levels of government demonstrate how technology can be used to restructure operations and enhance and expand the delivery of services.

The telecommunications reform legislation pending before the House and Senate conference will accelerate these trends and provide opportunities for all sectors of government to utilize new services and new providers to modernize processes and save taxpayers' moneys.

I urge you to focus on understanding the flow of information within government and to study how this can be improved by digitizing information and utilizing technology to more efficiently and effectively deliver that information to government employees and to your customers, the public.

I would like to thank the committee for the opportunity to share our experiences.

Thank you.

[The prepared statement of Mr. Lauer follows:]

1

STATEMENT OF LEN J. LAUER
VICE PRESIDENT - LARGE BUSINESS SERVICES
BELL ATLANTIC

SEPTEMBER 9, 1995

CREATING A 21ST CENTURY GOVERNMENT
COMMITTEE ON GOVERNMENT REFORM AND OVERSIGHT
MONTCLAIR UNIVERSITY, MONTCLAIR, NEW JERSEY

Good morning. My name is Len Lauer and I am vice-president of Large Business Services for Bell Atlantic. Thank you for the opportunity to appear before this committee and to offer Bell Atlantic's views on the potential of technology to aid in the development of a 21st century government.

Although the motivations of business and government may be distinctly different, our goals are similar. We both need to manage information and large organizations. Likewise, we both need to leverage technology to help manage our organizations and to deal with the following three fundamental changes in business and government:

1) the growing economic importance of information;
2) the impact of digitizing information; and
3) the convergence of technologies which will create new distribution channels for information.

First, a key change in business and government is that commerce is being driven more and more by the flow of information – and less and less by the flow of goods.

Today's businesses do not depend on manual labor and physical raw materials nearly as much as they once did. Businesses now rely on information and products of the mind. New Jersey's economy, like the nation's, is shifting from manufacturing to service. It is estimated that, within the next ten years, about 80 percent of all jobs will be involved in some way with the preparation and delivery of information rather than hard products.

A second critical change affecting business and government is digitization. Digitization – the ability to represent all forms of media as 0s and 1s – is proceeding relentlessly, resulting in the technology convergence of audio, video, and graphics.

I believe the impact of digitization upon information flow is best explained by Nicholas Negroponte, director of MIT's media lab: "The slow human handling of most information in the form of books, magazines, newspapers, and videocassettes is about to become the instantaneous transfer of electronic data that moves at the speed of light."

The Internet, a computer network with some 20 million users and an annual growth rate of 30 percent, has dramatically increased the flow of information to businesses and customers around the world. Anyone who's been in a bookstore lately cannot help but see the growing number of books on using the Internet. Internet searchers can access digitized government and commercial information, bulletin boards and radio broadcasts. "Net" surfers can pull up video clips, and can ask questions and provide immediate feed back to televised programs such as "Dateline" and CNN's "Talk Back Live."

Eventually, books will be digitized for pure economic reasons. Today, it's time consuming to buy a book. You have to get in your car and drive to a mall and hope the book you want is still in print and in the bookstore. Also, it's costly to produce a book -- almost 50 percent of the cost of producing a book is in inventory, shipping and returns. A digital book is likely to be on the Internet, never go out of print, and always be available.

Just think about all of the paper generated by government, and how much time and money could be saved if the same information were digitized.

The third important change impacting business and government is the convergence of technologies. The accelerating convergence of communications services has eliminated the need for maintaining separate channels and networks for different voice, video, or data services. Increasingly, as we move toward the 21st century all sorts of services will travel together over all of these communications media.

The telecommunications reform legislation passed by the House and the Senate this summer is likely to accelerate the convergence of technologies and blur the traditional lines between services and providers.

This mixing of communications services has resulted in an explosion of new products, services, and options -- loosely grouped together under the moniker of "multimedia" services that blend together video, audio, and voice and data in a wide variety of new and creative ways.

For example, Bell Atlantic and Intel are developing and marketing a new line of interactive desktop data conferencing products. The new applications

allow users to work simultaneously on documents and spreadsheets and other applications, while seeing and talking to each other, "face-to-face," through their personal computers. People can see, hear and share ideas immediately between offices, whether the office is down the hall, across the town or across the country -- "offices without walls."

Indeed, the business world moves so quickly these days because the information flow never stops. Thanks to modern information technology -- computers, satellites, and intelligent networks -- the availability of information is independent of physical boundaries and time constraints.

The businesses that are proving to be the best competitors in this new environment are those that can quickly adapt to change, can maximize productivity, and meet the unique needs of diverse customers.

So what's the secret? If I were to name one single skill that is critical to productivity and adaptability, it would be information management -- the ability to leverage technology to acquire and process information to make quantum improvements in customer service and gain market share.

Clearly, a state-of-the-art network is not merely an asset in today's competitive world, it is a necessity. Within Bell Atlantic, we are using technology aggressively -- the same technology we sell -- to better serve our customers. We are constantly upgrading our public switched telephone network to provide better service and new services.

The amount of optical fiber we've installed to improve our network could stretch to the moon and back a little over five times. At more than 2.2 million fiber miles, that's almost two and a half times the amount we had in place in

1991. In nearby Clifton and Passaic, Bell Atlantic is deploying a switched digital architecture with a full fiber optic network. This next generation telephone network will help us to better serve our customers because of its increased capacity and technological sophistication, which will enable us to activate services within minutes, instead of days, and fix service problems within minutes, We expect quantum improvements in customer service.

By increasing the bandwidth of the public network, eventually all customers – residential, government and business – will be able to access multimedia services at competitive prices. Previously, these services were often available only through custom built, private networks for business customers.

We have found that the best way to improve service and control expenses is to downsize central bureaucracies, provide information to, and enhance the accountability of the persons closest to the customers. When a customer calls Bell Atlantic for service, the employee answering the call uses an automated system to perform several preliminary tests on the customer's line to quickly isolate the potential source of the service problem, saving significant time for both the customer and the company, Previously, these employees simply recorded the service request and forwarded it to a general repair department.

We also use technology within Bell Atlantic to enable employees to access the information they need to do their jobs, Our installation and repair technicians receive and record completed digitized customer work orders on hand held, notebook-sized laptop computers. By plugging their laptops into a telephone line, our technicians access a description of the customer's order, the customer's location, and other relevant technical information. We are in the process of upgrading our current system to laptops with wireless modems.

Each morning the Bell Atlantic employees who collect the coin boxes from our 220,000 payphones log onto a computer system, which monitors the volume of calls from our payphones and the amount of coins in the coin box, to retrieve and to print a list of the payphones on their routes with full coin boxes, Because this computer system automatically monitors the level of activity at a payphone, it eliminates some guesswork and ensures that full coin boxes are collected on a timely basis.

We use video conferencing instead of traveling to meetings, saving a significant amount of travel expenses and employee productivity time. We use corporatewide electronic mail, digitized corporatewide voicemail, and our local area networks to access internal company databases, the Internet, and commercial electronic databases.

In fact, our employees can access our corporate electronic mail and voicemail systems, and many of our local area networks from virtually anywhere. As our workforce becomes more diverse, and to help our employees balance their work and home responsibilities, we have found that telecommuting has increased productivity and morale, while lowering turnover and absenteeism.

The two pilot telecommuting programs Bell Atlantic conducted in 1991 and 1992 resulted in a 27 percent increase in workers' productivity, and a significant boost to morale. Participants reported that the flexibility of their schedules allowed them to handle family and personal conflicts without missing an entire day's work. Today, over 2,000 Bell Atlantic employees telecommute.

These results are supported by a recently released study by Georgetown School of Business at Georgetown University, which reported that the majority of

persons who work at home via telecommuting believe they are more productive and that the flexibility has improved their home lives. This study, which was commissioned by Bell Atlantic, involved a number of corporations including Fannie Mae, American Express, Bellcore and Marriott International.

We are continuing to improve our operations through a corporatewide self-examination to sharpen our focus on customers and streamline our operations. A series of teams are charged with examining several key business processes, making recommendations based on our customers' perspectives, without regard for functional and organizational boundaries, and then implementing these recommendations. We feel it is essential because of the constantly changing market and customer requirements.

Our customers are conducting the same detailed self-study. They are using technology to develop applications to restructure their operations to manage information and to better serve their customers.

County and local governments in New Jersey have begun using technology to streamline operations and do more with shrinking resources. Hudson County, New Jersey, which is using videoconferencing technology to arraign individuals charged with a crime, has saved over half a million dollars annually in overtime costs and transportation costs in the two years since the county has been using video arraignment The county also reports that the backlog of cases has been greatly reduced since the video arraignment system has been used.

During the past year and a half, the city of Bridgeton, New Jersey, has been using video surveillance in its downtown business district and in a public housing facility to monitor criminal activity. According to Bridgeton's Chief of

Police, crime has substantially dropped in the business district. In the public housing facility, calls to police have dropped from seven to eight calls per night to three to four calls per week.

In the city of Camden, New Jersey, one of the poorest cities in New Jersey and in the nation, personal computers using Intel ProShare and ISDN lines have been installed in eight community centers and city hall and will be used initially for computer-based training. Other applications for this technology include electronic town meetings with the City's mayor, developing an intergenerational learning program to bridge the gap between senior citizens and youth, and recreating a history of Camden.

School districts in five New Jersey counties -- Morris, Bergen, Union, Hudson and Burlington counties -- have formed countywide consortiums to build distance learning networks to use interactive video to enable students to take courses not normally available in their own schools. In Bergen County, the local police and fire departments and emergency medical service squads use the distance learning network for training and education.

Thanks to a public/private partnership involving Bell Atlantic, the municipal government, and the school district, personal computers and ISDN lines were installed in the homes of seventh- and eighth-grade students and teachers at Christopher Columbus School, Union City, allowing students, parents, and teachers to communicate with one another and with students in other countries on a regular basis, even outside normal school hours. Students regularly create multimedia publications and reports using spreadsheet, word processing, graphics and audio programs.

So far, the results have been gratifying. Union City students consistently out-performed other urban and special needs districts in New Jersey by approximately 10 percentage points in reading, math and writing scores on New Jersey's Early Warning Test, Standardized test scores and writing skills have significantly improved. Students scored average to above average in reading and language arts and above average in reading and language arts and above average to best in range in mathematics in comparison to national averages. There have been sharp declines in staff and student absenteeism and student transfers out of the district, coupled with a jump in the number of students transferring into the district.

These examples from various levels of government demonstrate how technology can be used to restructure operations and enhance and expand the delivery of services.

As you look at recommendations to restructure and streamline government operations and services, I urge to keep in mind the three key changes impacting business and government – the growing economic importance of information, the impact of digitizing information and the convergence of technologies which will create new distribution channels for information.

The telecommunications reform legislation pending before the House and Senate Conference will accelerate these trends and provide opportunities for all sectors of government to utilize new services and new providers to modernize processes and save taxpayers' money.

I urge you to focus on understanding the flow of information within government and to study how that can be improved by digitizing information and

utilizing technology to more efficiently and effectively deliver that information to government employees and to your customers, the public.

I thank the committee for the opportunity to express my views. I would be glad to answer any questions.

Mr. CLINGER [presiding]. Thank you very much, Mr. Lauer. That was very enlightening testimony, and I think everybody on this panel would agree that the government is way behind the curve in the sorts of things that you are on the cutting edge of.

Mr. Anderson.

Mr. ANDERSON. Good afternoon. My name is John Anderson. I am the director of procurement for Public Service Electric and Gas Co., and on behalf of the company, I thank you for this opportunity to share some of our thoughts and opportunities to help you in your thinking about government reorganization.

Just by way of background, Public Service Electric & Gas is New Jersey's largest utility and one of the largest combination electric-and-gas utilities in the country. We service 1.9 million electric customers, 1.5 million gas customers, and have revenues exceeding $5 billion.

Now, similar to other service industries—and I would include the government with that—the electric-and-gas energy sectors are undergoing tremendous change. Like the telecommunication and airline industries before us, society, customers, regulators, technology, and the financial community are helping to drive fundamental change in the structure of our industry.

We, as a company, welcome these changes, and we clearly understand that, to successfully meet those challenges and what lies ahead, we must re-think, fundamentally, the way we do business. Clearly, that is not unique in today's rapidly changing business environment, and it has spawned a whole new language to address the solution, terms I am sure you are more familiar with than I might be, such as re-engineering and process management.

What I would like to present to you today is a solution to one of the most fundamental, yet, strategic of business processes, and it is one that we call materials management, a process that is responsible for the on-time delivery of quality materials and services at the lowest total life-cycle cost. One that because of its significant effect on service quality, cashflow, and the size of the asset base, ranks as one of the functions businesses and I would contend government, most need to excel performing.

Before I describe the way we have restructured our materials management process, I wanted to make it clear that this, like any other significant improvement change, does not come easily. Unfortunately, there is no silver bullet.

Our initial focus for change was driven by a rapid growth in inventory levels in the early 1990's, coupled with increasing expenditures for materials and services, both of which underscored the need to develop a distinctive materials management competence in order to achieve our competitive cost and service quality obligations. Based on our total quality management philosophy of doing business, we knew the traditional approaches to conquer and tame these material costs just by trying to fix a problem would not produce the lasting results we needed, because they would not penetrate and correct the real root causes.

Therefore, we approached the issue from an integrated process perspective, from identifying material needs, selecting and dealing with suppliers, managing the flow of materials within the company, and somewhat uniquely, incorporating waste-management consid-

erations into the process. This horizontal view has allowed us to cut across many existing functions to form a strong management focus on improving the cost and delivery of materials and services within the corporation. In essence, we transformed the materials management process from a necessary but low-visibility back-room function to an integral element of our competitive strategy. This allowed us to move forward on a number of key initiatives which I believe have direct transferability to governmental operations when it is approached with the same horizontal cross-functional implementation.

These initiatives include:

Designing out the complexity and uniqueness up front in the process, through standardization, use of generic rather than original equipment manufacturer parts, common material codes and languages, and finally, better scoping of required services.

Second, the incorporation of a formal and disciplined planning requirement to reduce, if not eliminate, last-minute requests.

Third, developing a structured supplier relations and development process to leverage procurement through a much reduced supplier base and establishing strategic agreements and alliances with those suppliers that provide materials and services critical to operations.

Fourth, developing and implementing alternative purchasing tools for internal clients to use for those low-dollar-value, high-volume transactions, which unfortunately utilize a significant amount of administrative resources.

Fifth, develop new material handling techniques to reduce the amount of inventory that is kept on hand just in case.

Finally, incorporate and integrate waste-management considerations into the process to minimize and, ultimately, prevent both hazardous and solid-waste management stream issues.

Now, let me provide you some of the benefits we have realized thus far, so you get a sense of the opportunities available.

Inventory levels have significantly been reduced, dropping by 30 percent over the last 3 years, toward a new target of $100 million by 1997.

We have reduced the number of inventory items by 10 percent by using a common language encoding.

We have developed new working relationships and agreements with suppliers, such as Okonite, a cable supplier with manufacturing facilities here in New Jersey. By breaking the traditional buyer-seller philosophy, and working together on design and inventory problems, we have reduced the number of different types of cable we were using from 27 to 9. This translates to efficiencies for both parties and for our customers.

Implementing the purchasing card that had already been mentioned in previous testimony, empowering employees to purchase those low-dollar, high number of transactions has eliminated 30,000 transactions in a year.

Consolidating our solid-waste management with a single supplier has resulted in a recycling rate of over 85 percent.

Incorporating hazardous waste management into the materials management process has greatly aided in reducing the amount of hazardous waste volumes generated.

Many, if not all, of these types of improvements can be achieved within government agencies. It requires some fundamental changes in the way we think about our businesses and our operations. From stove-pipe organizations with rigid boundaries to horizontal processes that eliminate boundaries and turf issues. A number of government bodies are already moving forward in this direction, sharing resources across traditional political boundaries.

I mentioned earlier implementation takes significant effort and, I might add, some patience, as new competencies, skills, and measurement systems are developed to support the change, and I cannot underestimate the amount of work this takes, having just come back from a seminar in Boston on the same topic, and it also takes the commitment and leadership that this committee is showing, but the improvements can be significant.

I want to thank you for allowing me to share our experiences, and I would be happy to answer any questions you might have.

Mr. CLINGER. Thank you very much, Mr. Anderson. You do well to underscore the fact that this is not easy. What we are trying to do is not an easy process.

Mr. ANDERSON. That is for sure, Mr. Chairman.

Mr. CLINGER. Mr. Martini.

Mr. MARTINI. Thank you, Chairman.

In the interest of time—there are a number of questions I would like to ask each of the panelists, but unfortunately, we do not have that time.

I guess, by way of an example, I would like to direct my question to Dr. Reid, and Doctor, first let me congratulate you and the university for its new escalated status as a university. We are all very proud of Montclair State University and the achievements it has made in recent years, and thank you again for hosting us.

You have testified a bit about the reduction of the bureaucracy here in the State in terms of the oversight of the university, particularly the abolishment of the Department of Higher Education, and as you probably know, we in Congress, some in Congress, are certainly looking at every department, one of which is the Department of Education, and I am wondering if you would have any opinions or ideas with respect to the Congress', if not abolishment, restructuring of that department or abolishment of that department?

Education traditionally is a more local matter, and many of us are questioning what is the role of the Department of Education and is it meeting its goals and purposes.

Mr. REID. Well, thank you very much, Congressman.

As you know, in higher education, there is a different role for the department than there is in terms of secondary and elementary education. There are some impacts, but if I may, I would like to describe to you the circumstances which led to the right conditions for eliminating the Department of Higher Education in this State.

It had been in business for nearly 30 years. It was probably a victim of its own success. I think it helped to establish in the State of New Jersey a very successful system of higher education, to the point where the institutions were ready for self-regulation.

We get on the phone; we talk to each other. When there are conflicts, we resolve them. We cooperate with each other. All of those

are the results, but before that, there were certain conditions which led to that.

I think one of the things that you have to assess is who will do the functions, the good functions, of the Department of Education after it is abolished? To the extent that they can be transferred back to local jurisdictions, that would be great.

In the end, however, there are certain kinds of things in support of research, in support of quality and standardization, and in support of transferring from one area to the other which that department does perform, and as long as the Congress, in its examination of what is to happen with the department or in its elimination, provide for those, then I think that is certainly a possibility.

I have not studied it enough to know if, in fact, all of those things can be transferred.

I do know that many of the services that it has provided in the past, particularly for research at universities, for demonstration projects, for international education, have been very useful to us. That is not to say that they could be performed by someone else.

Mr. MARTINI. Thank you very much.

Mr. CLINGER. The gentleman from New Mexico.

Mr. SCHIFF. Thank you, Mr. Chairman.

Also in the interest of time, I am going to brief.

I want to acknowledge the benefit of the testimony of each of the witnesses, but I think in terms of where we are on the cutting edge, Mr. Lauer, I think what you are talking about in terms of telecommunications and information systems, when we compare where we are today, much less a few years ago, with where I think we will be in the future, I think enormous changes are occurring in that area, and you gave a number of examples, from teleconferencing to avoid travel costs, perhaps even to avoid hearing costs, to—I was a district attorney for a number of years before I was elected to Congress—to simply video arraignment, because the amount of time, effort, and personnel costs of moving groups of people under police supervision back and forth adds up when you do it day after day. What I want to say, I want to say to you but really to the whole panel here, is even though we are all committed to a balanced budget—we have differences in agreement, we have differences in timetable.

The President has proposed 10 years, the Congress 7 years. I personally regard those as details. I mean everyone is committed to a balanced budget. We know that will mean restraint on spending. I want to kind of flip the coin there.

The Federal Government will still be there. The Federal Government will still have a significant budget, even in reaching a balanced budget.

If your industries or academia have ideas as to how government can do it, perform its services, better, cheaper, faster, more efficiently, you have a product to sell, and you have a significant market in the Federal Government and in all the other levels of government that would be interested in buying that product.

So, I think that, like in all matters, those with ideas always have something to offer even in what appears to be a tighter market. It will never be a tighter market for a better idea.

Thank you very much, Mr. Chairman.

Mr. Lauer, did you want to respond?

Mr. LAUER. I very much appreciate your views, and I will tell you, within New Jersey, within our business sector, our largest customer is the State of New Jersey, with all the counties and municipalities, and we very much look forward to the public-private partnership, bringing our expertise to help bring efficiencies to government. So, I thank you for those comments.

Mr. CLINGER. One of the other activities that this committee is very much involved in—in fact, will be directly involved in next week—is bringing a bill to the floor of the House of Representatives that will dramatically reform, revise, radicalize, if you will, the way the government buys goods and services, because I think it is not that we have rejected the new technologies, the new ideas, the new ways of doing things; it is the fact that the system is so wrapped up in red tape and incredibly arcane provisions that make it—No. 1, it discourages people like you from even bidding to do business with the Federal Government, because it is not worth it to you; but No. 2, it really puts us in a terrible position in so many areas.

I mean the Speaker of the House, who would certainly subscribe to all of the comments that have been made here today, loves to show a vacuum tube and then a computer chip, micro-chip, in which he says this vacuum tube—there are 2 million or something of these needed to equal this one little chip, and yet, we are in the dark ages in the Federal Government because of this arcane system that we have, and as a result, we are going to try to change that.

No. 1, it puts people, frankly, at risk.

I mean the FAA, for example, is running the entire air traffic control system of this country with vacuum tubes, and they cannot buy them in this country, because they are not made in this country any longer, and we know that, over the summer, the system has gone down, air traffic control systems have gone down.

So, people are really put at risk by that.

We hope that we are going to take a modest step toward changing that with the bill that we will pass next week.

The gentleman from California.

Mr. HORN. Thank you, Mr. Chairman.

All of you have gone through down-sizing experiences of one sort or the other. What is the greatest mistake that either you, your board, or your State governing body, in the case of the public university, made that we should avoid making?

What do you recall as the biggest mistake you made in downsizing and consolidating?

Mr. BERKIN. Well, like yourselves, before we embarked on a performance quality improvement strategy at Dun & Bradstreet, we surveyed the landscape. We spent 10 months looking at what other companies had done in the area of total quality management, and that was very enlightening.

In fact, we called it our period of enlightenment, and we learned through that experience, I think, a myriad of potholes to avoid. Leadership was the most frequent failing that we observed in those companies we studied. The second was not getting——

Mr. HORN. When you say "leadership," what do you mean? The lack of communication?

Mr. BERKIN. Lack of leadership commitment to a total quality approach and a systematic total quality approach to improving the performance of the organization.

Mr. HORN. Now, is that simply higher management or all through leadership in management?

Mr. BERKIN. Well, most critically, the person at the top.

Mr. HORN. OK.

Mr. BERKIN. That person had to demonstrate in every venue, frequently, and in all types of communication, support for and commitment to total quality throughout the business processes.

The second—I would say the second failing which we noticed and worked very hard to avoid was over-training employees in an organization at the expense of early and measurable performance gains.

Dr. Juran, one of the gurus of total quality in this country and abroad—I heard him at a national conference on quality say that, if he could give any advice to an organization about to embark on some total overhaul of their processes, he would encourage them to get some early measurable successes, because those successes, in fact, breed success and will create in the organization, in the front line of the organization, the capacity and readiness to manage change successfully, and so, selecting the right techniques and very targeted compelling areas is very critical to that.

Mr. HORN. OK.

Mr. Sweeney.

Mr. SWEENEY. Two of the issues that Avionics faced, which I would not consider failings but that we certainly could have done better—in any down-sizing that takes place over several years, morale becomes a problem, and one thing that we found is that you cannot communicate too much to the work force as far as what is going on, what is the status of the company, what is the overall outlook, and our President addresses the employees as a group at least twice a year, and as the senior staff of the company, we follow through on that with our own groups, and I will just reiterate that you cannot do it enough.

Another thing that we found is that, as you down-size, it is never intentional, but you do tend to thin out the lower levels more than the upper levels, and part of the reason is fear of age discrimination lawsuits and things like that.

All large companies are very sensitive to staying in balance as they down-size, because the price of not doing it far outweighs the effort in trying to comply with it, but as a result, when it is all done, you do end up with a very expensive company in terms of the aggregate salary of who is left, and then we have to try and stay competitive with that.

I think people are your biggest asset, and it is just tough to stay competitive when that is how you are left.

Mr. HORN. So, your company did not offer early out benefits to encourage some near retirement to retire and clean out some of the upper ranks?

Mr. SWEENEY. We would have liked to, but ITT did that once before, and it was a very expensive way to let people go. I have my own views on it, but as a company, we do offer voluntary layoffs, but that is not any additional incentive to someone. It just lets

them pick their time. There is no additional compensation as a result.

Mr. HORN. Dr. Reid.

Mr. REID. Thank you.

I think that our failure has been primarily not using the very technology that we are teaching our students to go out and use in their first jobs.

Academia frequently is very good at transmitting information but does not always adopt, and I think we probably came to that adoption too late.

We are doing it now, and even as we do it now, we probably made the technology available much more rapidly than we made the training to use the technology, which shows that we can continue to make mistakes after we correct some of them. It is a process of continuous correction.

Then I think the third area would be probably thinking too much within the box, looking only at other higher education. It is a mistake that organizations make outside, industries make it repeatedly, and that is, if we want to learn how to do something effectively, do not just look at other examples of universities but look at other organizations that are doing this effectively. Those principles by which they achieve it will be transferable, and we are the ones who have the expertise to transfer it, but we have to see it first.

Mr. HORN. Very good.

Mr. Lauer.

Mr. LAUER. Congressman Horn, two very quick pieces.

A key piece is with the people, the adaptability, to get across—we have been investing very, very much in changing the view of an entitlement toward a job for the next 30 years as you join a corporation or the Federal Government or State government to a view that you need to work on your skills, and as Jack Welch from GE says, you need to focus on employability as opposed to employment in one company.

So, that adaptability of the employees is very, very important, to get them to embrace change and down-sizing and re-engineering, and with that, the companies also owe it to the employees, with the concept of employability, to invest in their skills and their training.

As the mayor from Paterson spoke earlier today, we have really got to look at training, so that as we change the jobs or the employees or the workers in the Federal work force, we have got to put training in place as we give them new challenges, and those have been our two key shortfalls that we are trying to improve upon.

Mr. HORN. That is very helpful.

Mr. Anderson.

Mr. ANDERSON. Let me just pick up on that.

I think the issue is the fundamental change in the employment contract, if you will, that you are re-structuring—if you are taking a radical approach to this and you are really serious about re-engineering things, you are going to radically change everything, and particularly that contract that we have become so accustomed to, that almost parental checklist—tell me what to do and I will do it very well—you are going to change jobs and make them complex, you are going to change the whole historical view of promotions, as

we just heard—it is not promotions, it is employability—and this whole change to that sector—and I will call that more the middle supervisory and middle-management sector—is phenomenal, and it cannot be overstated how much you need to put into that.

Mr. CLINGER. The gentleman's time has expired.

The gentleman from Virginia.

Mr. DAVIS. Let me make a couple of comments and see if I can elicit any reaction.

Mr. Lauer, I liked your comment about how the world is changing and we are now in the flow of information as opposed to the flow of goods, and we are finding, as we move into the border-less economy worldwide now, that that is changing and America's role with that—there is a tremendous shakedown already in this country over what industries are going to be competitive over the long term and what are not, and we have heard some of the frustrations today from some of the people that seem to be on the short side of their industries or particular companies are on the short side of that.

I was with a high-technology company, a senior V.P., before I was elected to Congress. Tremendous opportunities, I think, for government, but we need to adapt, too, and we are really, right now, way back from where we need to be.

I was interested in your comments on telecommuting. We have started to set up government telecommuting offices out in some of the suburbs, but we have just scratched the surface in terms of what some of those possibilities are.

The old management-employee relationships are changing.

Mr. Anderson, you spoke of that, too.

It is changing, and people do not seem to understand it or want to give up some of the old habits very, very slowly, but I wonder if you could comment on telecommuting and how you see some of this progressing with your company, what the government might do to take advantage of that, too, as we move into people working more on information flow, working more from PCs than in the old days when they came into an office and were shepherded by a boss and punched a time clock?

Mr. LAUER. Thank you, Congressman Davis.

Telecommuting really is on the dawn of a new environment for the employer to employee. Because of the diversity of our work force, with dual-income spouses, the need for child care, the employee being at home very much appreciates this.

Obviously, you do have many issues. From a career standpoint, the employee may feel that I do not have the conversations around the water-cooler, I am not playing politics, therefore I may not be promoted.

We just finished a study that we funded with Georgetown University looking at the social human aspects of telecommuting and the impact upon that, and I will be glad to forward a copy of it to the committee.

Mr. DAVIS. The good-old-boy network is destroyed with telecommuting.

Mr. LAUER. Exactly. But we see it as phenomenal growth occurring. The technology that was not there in the past is there today. There is significant cost savings.

I would tell you that, in Bell Atlantic, we are budgeting over the next 4 years to save close to $80 million over 4 years due to telecommuting, primarily because of lowering our real estate costs.

Within our sales force just here in New Jersey of over 400 to 500 sales people, we will next year consolidate to 3 locations from 11.

We will take all of our sales individuals and have them telecommute and have them, what we call, hoteling, almost renting a desk when they come back in.

That will be a standard lap-top PC with the standard conferencing materials, but they will not own a desk anymore, we can free up that office space, and it is saving us tremendously from a real estate perspective, lowering absenteeism, lowering turnover.

The team likes it, and the technology is there today to take advantage of it.

So, I will forward that material to you, and I would really encourage the Federal Government to embrace telecommuting.

Mr. DAVIS. I would be interested in any comments anybody else has on telecommuting.

Mr. REID. It seems that telecommunication has the potential of actually creating and enhancing a community, and I was just thinking about what happens here on this campus on the network—that if someone sends out an idea, everyone jumps in, and there is this debate.

We just had, unbelievably, a 2-week debate on the Bell Curve that started out with someone's comment about the book, and it went on and on. I call them E-mail wars, because the sides are clearly defined.

Mr. DAVIS. It is harder to shout, though.

Mr. REID. No, it is not. You cannot imagine how much shouting goes on.

There are all kinds of ways of really enhancing a community with telecommunication. We did that, first, with staff, and now all faculty members are on that. They can do it anytime of day or night, which means that you are actually enhancing productivity.

The big challenge that we are going to have in the future is how do you compensate people for this, because we are actually getting people to work longer hours, E-mail being sent at 1, 2, 3 o'clock in the morning, as well as their regular day's schedules. So, I think that that is an enhancement, and I imagine bringing on-line 14,000 students who will have the same capability not only on the local area networks on campus, but imagine that they have that access, through the internet, to the world.

So, I think that telecommunication does have the potential of not only enhancing communication in a community but for each organization improving productivity.

Mr. BERKIN. Our ability to close almost half of our field locations in the last 4 years has come largely from exploiting the technology that enables workers to work from the home and on the road.

I would say that the greatest challenge we have faced in that area, though, is that all jobs are not as conducive to telecommuting as others, and individuals, as well, have different personality makeups, some of them requiring more human interaction, face-to-face interaction.

So, the challenge, I think, has really been for management and teams of worker to identify those differences and then structure the daily work life between telecommuting and getting together face to face so that the output from the work team is of the highest quality that it can be.

So, I think that is one thing that we have had to watch for quite carefully.

It is not uncommon from the experience that a company gets when it starts to use E-mail.

You look through the E-mail and you see that whatever the issue is bouncing around from person to person or group to group, and you look at it and you say, well, wait a minute, time out, it is appropriate now to get in a room face to face and flatten what are just a lot of airing of issues with no real resolve.

Mr. DAVIS. Thank you.

Mr. CLINGER. The gentleman's time has expired, and all time has expired.

We want to thank the panel very, very much for your participation here today, your patience in sticking with us all morning and afternoon, and to Dr. Reid, particularly, we thank you for your great hospitality here today.

Panelists, we appreciate your participation.

Before we conclude the hearing, I want to express, on behalf of the committee, our deep appreciation to three specific individuals who have made our visit here such a pleasure. They are Julie Marchini, Marilyn Madden, and Marsha Campbell Young, all of Montclair State University.

You have done enormously great work here today, and we thank you.

Let me again also thank our witnesses and the people of northern New Jersey, who came out in great numbers today to participate in this sort of exercise in participatory democracy, and we are grateful for your participation and your presence here today.

It has been a most helpful and most informational and instructive hearing, I believe, and I am just grateful that we were able to accept Congressman Martini's invitation to come and listen to all the good folks here.

Congressman Martini.

Mr. MARTINI. Thank you, Chairman. I share your thoughts and comments. I think that today's hearing has been very stimulating and informative and helpful, particularly this last panel.

Although I did not have as much time as we would have liked, certainly hearing from you as to some of the lessons that you have learned in your efforts to make your organizations more effective and achieve the goals that you have achieved have been helpful, and also, Mr. Chairman, I would like to thank you and the other members of this committee for taking time out of their day to join us here in New Jersey.

I feel confident that we all learned from the many witnesses that we had and thank all the people who took time out of their schedules today to be here.

Thank you again, Mr. Chairman.

Mr. CLINGER. Thank you, Bill, and again, I would thank my colleagues, too, for coming to the hearing today.

I apologize to those who might have anticipated a further open-mike session, but we did run out of time. We do have Members who have to catch airplanes and go back to their own districts, and so, we will have to defer that to another time, but I do thank you all, again for coming, and with that, the committee stands adjourned.

[Whereupon, at 2 p.m., the committee was adjourned.]

CREATING A 21ST CENTURY GOVERNMENT

FRIDAY, OCTOBER 6, 1995

HOUSE OF REPRESENTATIVES,
COMMITTEE ON GOVERNMENT REFORM AND OVERSIGHT,
Auburn, WA.

The committee met, pursuant to notice, at 10:10 a.m., in the Little Theater, Thomas Jefferson High School, 4248 South 288th, Auburn, WA, Hon. William Clinger, Jr. (chairman of the committee) presiding.

Present: Representatives Clinger, Schiff, McIntosh, Tate, Dunn and Smith.

Staff present: Monty Tripp and Kim Cummings, professional staff members; Judith McCoy, chief clerk; and Denise Wilson, minority professional staff.

Mr. CLINGER. The Committee on Government Reform and Oversight will come to order. We are here this morning to conduct——

VOICE. We cannot hear you.

VOICE. Your mic is not on.

Mr. CLINGER. How is that?

VOICE. That is better.

Mr. CLINGER. All right, I will say it again. The Committee on Government Reform and Oversight will come to order.

Good morning to all of you and thank you for coming to this committee's third hearing on what we call creating a 21st Century Government. Before I go any further, I would like to thank a very distinguished member of this committee and this area's representative in Congress, Randy Tate, for hosting us here today and for the work he and his staff have devoted to the hearing's success. I would also like to recognize and thank the Members of the Washington delegation, specifically Jennifer Dunn, for participating in the hearing this morning.

This morning the committee is going to hear from a number of distinguished witnesses who will share with us their ideas on creating a leaner, more responsive Federal Government. Our main goal is to learn from their success stories and apply these lessons to our Federal reorganization priorities.

Our focus on Federal Government restructuring goes beyond streamlining. It encompasses every function within our agencies, deciphering which functions are essential and which are no longer necessary. We must step back from bureaucratic and inefficient Federal institutions and ask the questions that the private sector has been asking for years: What are the main functions of this organization and can we effectively and efficiently meet the service

delivery needs of our citizens well into the next century and indeed into the next millennia?

It is essential that we involve government in only the functions that it can perform well and keep it out of functions that can be successfully delivered through private sector or State and local means. Today, there are 1,390 Federal domestic programs administered by 53 departments and establishments of the Federal Government. Ten years ago there were 52 Federal departments and agencies administering just over 1,000 Federal programs. The reality is that the Federal Government is too big and involved in too many functions so that it is not really able to deliver them all well.

The problem, in my view, with government today is that it has become too large and inefficient, causing it to become less responsive to the service delivery needs of our citizens. The time is now for a complete top to bottom review and renovation of our Federal departments and agencies.

Our task as lawmakers is to create—it sounds like an oxymoron—smart legislation that will innovate and transform the Federal Government into an efficient and responsive organization that will meet taxpayers' needs in the coming years. The only way to reach this goal is with the support and input of the American people. With this partnership between lawmakers and citizens, we can create a government that is first, responsive to the needs of the American people; second, efficient and effective, not wasteful and; third, able to use technology to enhance and augment its service to the people.

The witnesses appearing before us today all, each and every one of them, offer a unique perspective on the role they have played in the restructuring of their organizations. They have met the needs of an ever-changing environment and have very innovative and thoughtful ideas to offer in our quest to downsize our Federal institutions. It is our hope that the testimony we hear today can be implemented effectively in the Federal restructuring efforts that are underway today, and will be underway tomorrow and into the next century.

It is our intention through the use of these field hearings to take a step back from politics as usual in Washington and get in touch with the heart of the Nation, the American people. We encourage your participation to ensure that the legislation we introduce on downsizing has your support and represents your ideas. The reason we are having an open mic session today is to allow you to ask us questions and frankly tell us your views of what we should be doing. And we look forward very much to that portion of the hearing today, to hear from you.

So with that, let me thank the witnesses, the audience that has turned out here and my colleagues who have taken the time out of their busy schedules to listen to what the people of this State, this great State of Washington, have to say.

I would now like to recognize your local representative, a very valued member of the Government Reform and Oversight Committee, Congressman Randy Tate, for any opening statement he might like to make.

Mr. TATE. Well, thank you, Chairman Clinger. First and foremost, I would like to welcome the members, especially those from

outside of our State, to the real Washington, Washington State. I just appreciate Chairman Clinger and his leadership for coming all the way out here to our area to hear from the people. I want to thank Mr. McIntosh, Mr. Schiff and my good friend Jennifer Dunn for taking the time out of their day to come and be here.

I would also like to publicly thank the Federal Way School District, and more specifically Thomas Jefferson High School for their incredible hospitality today. I think they deserve a round of applause for all their work. [Applause.]

They have done a great job. And I want to thank you, the audience, for taking the time out of your busy schedules to come by and listen and as well as maybe add some of your comments as well.

Last November the message was very clear that the government's too big and it spends too much and the public was clear last November that they did not want more of the same, but they did not just want less of the same as well. They wanted a government that was transformed. And the reason they are so concerned and want that kind of transformation that I have heard is because we have a $4.9 trillion debt, which works out for my daughter, Madelyn, to be $187,150 that she will have to pay in taxes in her lifetime to finance this national debt. And balancing the budget really is not just an accounting or academic measure. It really affects real people and their real lives. Alan Greenspan recently testified before the House Budget Committee and stated very clearly that his biggest fear was that if we do not balance our budget our children will not have the same opportunities that we have had. That is their biggest fear. And he said if we balance the budget we could turn that around and make sure that our children truly do have a better opportunity. By lower interest rates which will create more jobs and more economic opportunities.

So the question really has been this year whether to borrow or to balance and we have committed in this new Congress to balance and we will balance the budget and it will be the first time since 1969. The first time in a generation. And we are doing it by returning power to the people; returning power to the local governments; returning power to the State governments and the Federal Government giving up some of its power.

That is what this hearing is all about, creating a 21st century government. It is a long-term process. It is not just going to happen overnight. It is going to be a process where we are going to have to work hard both year-in and year-out and we are going to have to determine what the Federal Government should do, and do it well, and decide what the State should do and what the private sector should do and what the Federal Government should get out of all together. And that is why all you folks are here. The reason we are here on the panel is to listen and to learn. We want to hear from local officials, public officials, private sector individuals, small employers, large employers, the public because it is important to leave Washington, DC and to talk to real people that have dealt daily with creating solutions and answers to the tough problems. The most important thing is to get out of the Beltway and to talk to real people. And by engaging the American public, the people in this room, we truly can change the way our government does business. We truly can create a 21st century. Congress is committed to

getting our fiscal house in order and we're doing it, I believe, for all the right reasons; making sure our children have the same opportunities that we have had, and we can do that by creating a 21st century government.

I appreciate you taking the time to come out.

Mr. CLINGER. Thank you very much, Randy.

I am now pleased to recognize the vice chairman of the Government Reform and Oversight Committee, the gentleman from New Mexico, Mr. Schiff.

Mr. SCHIFF. Thank you, Mr. Chairman.

I just want to say that this is my first visit to this part of Washington State and I am pleased to be here and I am pleased that so many people have come out to join us to testify or to watch the congressional process at work. And I want to thank particularly Congressman Tate and the people of this area for their hospitality. Thank you very much.

Mr. CLINGER. Thank you very much.

Next, a very valued member of the Government Reform and Oversight Committee, a freshman member of the committee, and a very unique freshman in that he is one of only two I believe, or maybe perhaps three freshmen who are also chairmen of subcommittees. Mr. McIntosh of our new subcommittee looking at regulations and how we can limit them, get rid of a lot of them, reform them, and he is providing a very vital role in that. The gentleman from Indiana, Mr. McIntosh.

Mr. MCINTOSH. Thank you very much, Mr. Clinger. It is a pleasure to be here in Washington State, especially to be in Randy Tate's home district. Randy and his wife Julie have become very good friends of Ruthie, my wife, and mine. And I must tell you, working with my colleagues in the freshman class, the delegation from Washington State, from Jennifer Dunn to all the new freshmen, is the best delegation that I have been able to work with and you should be very proud of the efforts they bring to this Congress to not let us forget the importance of keeping our word and listening to our constituents.

I just want to point out how appropriate it is today that we meet in Thomas Jefferson High School. Because what we are in fact about is returning to what our founding fathers viewed as the proper role of the Federal Government. And one of the things that I always try to keep in mind when I cast votes and engage in work as a Congressman from Indiana is the beginning of the Declaration of Independence authored by Thomas Jefferson where he declared for all of us "We the people . . . hold these truths to be self-evident that we are endowed by our creator with certain inalienable rights, among these, life, liberty and the pursuit of happiness." Those rights are the ones that government has created in order to secure and our job is to return to those fundamental principles that made our country great and bring them alive today so that we can build a government that serves the country in the same way as we prepare for the next century.

Thank you again for hosting this meeting and being here today. It is a pleasure to take part in it.

Mr. CLINGER. Thank you, David.

Now, I am very pleased to recognize another member of the great Washington delegation to the committee. She is a very important member of the House of Representatives. She serves on the very critical Ways and Means Committee which used to be called the ways to be mean but we think we are going to be cutting taxes and not raising them. [Laughter.]

We are delighted to have Jennifer Dunn join us. Jennifer.

Ms. DUNN. Thank you very much, Mr. Chairman.

Good morning ladies and gentlemen. Let me join Chairman Clinger and Congressman Tate and the others in welcoming our colleagues to Washington State and certainly you to this meeting this morning.

Certainly everyone assembled here today has experienced old fashioned government, long crowded lines that curve and twist down marble hallways in pursuit of a government certification or a document or absolution of one type or another. Government spending citizen's money recklessly on programs that would be better sponsored by State government or by the private sector; government operating under processes that have not been audited for decades and government far behind the private sector imposing regulations on the shoulders of business that made government the enemy and not the partner of those who face risk every single day out there trying to create jobs and trying to operate. This is what frustrates people about government and I believe it is a major part of what caused the people in Washington State and in other States around the Nation to put our party in control and give us a chance to run the House of Representatives for the first time in 40 years.

So now having made the commitment, our majority has a contract with the people and that is to make real change. We started as soon as we became the majority in January by cutting one-third of the staff on congressional committees by ending the unfunded Federal mandates on cities around the country and by eliminating hundreds of programs and reducing hundreds of other programs and by privatizing agency functions wherever possible. All of this is an effort to restructure the Federal Government in order to fit the 21st century.

With that in mind, this important committee is here today to listen to citizen testimony and to learn from those of you who will be testifying before us today. The new majority in Congress has a very, very deep belief in the theory that people, our constituents, the folks we represent are a source of good ideas and that local solutions are almost consistently better than Federal solutions.

So today, I am honored to join this committee, even if it is a brief appearance for me because I have to move on to the rest of my calendar for the day, but to learn from you in the next little while. Today, we are going to hear testimony from panelists who view the relationship between the local and the Federal Government in positive ways and fresh ways. And we will be asking questions during this hearing. For example, do parents, teachers and local communities benefit from the constantly increased Federal regulation over the lives of children and their education or do you favor eliminating the Department of Education, a Federal bureaucracy that since its creation in 1980, 15 years ago, seems unable, even with a $33 billion a year annual budget, to reverse the decline of our students'

attitudes, their behaviors and most importantly their test scores? Nor does the Department do anything to improve the United States' stagnant graduation rates. Or has the government become involved where it should not be involved where it is competing with the private sector? Would utilizing the experience and the initiative of private sector businesses be a better approach? Some panelists will speak to this. To the issue, for example, of privatization. You will hear from John Carlson and others this afternoon. I look forward to reviewing that portion of the testimony because it is a particular interest of mine.

I have introduced some legislation that would privatize an entire Federal agency, the Government Printing Office. We believe that companies right here in the Puget Sound area and all over the country are just as qualified to print government documents as any government agency and to do it at a competitive price. What I discovered during my research into this issue was that we would save from privatization $1.5 billion, $1.5 billion over 5 years by such a simple step. But the Government Printing Office is simply one example of areas where we should ask government to retreat and allow small businesses in the private sector the opportunity to do their work, thereby increasing revenues, creating jobs for our people and encouraging the entrepreneurial spirit.

So, Mr. Chairman, while I must apologize in advance for not being able to be here for the entire hearing, let me say that I congratulate you on bringing this hearing to the Northwest, literally for bringing Washington, DC to Washington State, and for caring what we think in this part of the country. I am anxious to get started, excited to hear the ideas that will come from our panelists today to downsize government, to restructure it, to make it less invasive into our lives; to make it more responsive. And more than anything, to simply move away from that old fashioned idea of Federal Government; the long lines; the red tape; the distant bureaucracies and the unbalanced budgets into an era where government once again in its new downsized State become the partner of the people here at home.

Thank you, Mr. Chairman.

Mr. CLINGER. Thank you very much, Jennifer. I would just commend you—Congresswoman Dunn was very instrumental on a commission that studied the Congress for over 2 years and came up with some reforms which were enacted into our procedures in the House of Representatives on the first day that we met. One of those reforms applies the laws that we impose on everybody else on ourselves, which sounds like it should have been done a long, long time ago. But Congresswoman Dunn was instrumental in preparing that report and then seeing those reforms enacted.

Unfortunately panel No. 1 has been somewhat diminished. Two of the panelists have unfortunately indicated that they are unable to be with us this morning; the speaker of the Washington State House, Mr. Ballard and council member Mr. Sims. But we are delighted to have our final panelists on panel No. 1 here and I would like to ask Mr. Tate if he would care to introduce our remaining panelists.

Mr. TATE. The panel may be smaller but it definitely will be a very good panel with Chris Vance. I actually met Chris Vance in

1990, when he was first elected to the State legislature representing the 31st District which was the Auburn, Kent and Renton area. And Chris moved up to the leadership very quickly as assistant floor leader and then was a real advocate on taxing and spending issues as well as education issues in the past. I believe Chris will add some really needed insights. He has been at both the State legislative level as well as part of the merged Metro/King County Council and the creation of that government entity. So, I think Chris can bring us some interesting insights in that process.

With that, I think the chairman is going to swear in our witness and we will go ahead and get started.

Mr. CLINGER. Mr. Vance, it is a custom of this committee to swear all witnesses so as not to prejudice any witness. So, if you do not mind taking the oath.

Mr. VANCE. Sure.

[Witness sworn.]

Mr. CLINGER. Let the record indicate the witness indicated in the affirmative.

Mr. Vance, we are delighted to have you with us and the floor is yours.

STATEMENT OF CHRIS VANCE, COUNCIL MEMBER, METROPOLITAN KING COUNTY COUNCIL

Mr. VANCE. Thank you, Mr. Chairman. I am delighted to be here and I very much appreciate the invitation from the committee. It is a pleasure to be here with old friends like Congresswoman Dunn and my old friend and colleague from the State House, Congressman Tate. It is also a pleasure to be here in the high school from which my two sisters graduated, serving south King County in this area.

I want today to make some brief comments to reinforce what I think is the committee's mission and reason for being here, and that is to look for ways to devolve decisionmaking from the Federal Government to the more local government. I am now a member of the Metropolitan/King County Council and my comments today will fall into two areas. First, to brief the committee on what is happening here in King County, a very unique county, which involves both very urban areas, suburban and highly rural areas. How we have over time evolved all on our own a very interesting form of self governance here to meet the needs of this very unique community. And then second, I will give you two examples of where over-regulation at the Federal level is causing a real burden and hardship for local decisionmakers.

First, to begin with, just a bit of history. In the beginning when the State constitution was formed in 1889, King County had the same form of governance as every other county, a three-commissioner form of government with the commissioners being both the executive and legislative branch of governance. The county at that time was basically two-thirds of the people lived in the city of Seattle and received their direct local services from local government and the county was pretty much the government for the largely rural agricultural and timber areas of King County. Over time, especially with World War II and the development of the booming suburban crescent around the city of Seattle, local leaders and leg-

islative leaders in Olympia saw a need for a change. They realized after World War II there was no government that had the authority to run a bus between Seattle and the suburban cities which were now evolving, or to clean up what had become a very polluted Lake Washington with all the local governments dumping their sewage into Lake Washington. So local leaders, with legislative leaders, formed a metropolitan municipality called Metro——

[Bell rings.]

Mr. SCHIFF. Class change.

Mr. CLINGER. If anybody has to go to class, they have got to go now.

Mr. VANCE. Boy, that takes me back. [Laughter.]

To provide specific regional services that no local government was empowered to. That model served us for some time until 1969 when again local leaders realized that three commissioners could not serve a county which had reached nearly a million people in population. So in 1969, the county of King elected freeholders who wrote a constitution for King County, the county charter, creating a nine-member county council and a separately elected executive.

That form with the county slowly getting into the regional service delivery business alongside Metro served again for some time until in 1992 once again the voters of this county realized that it made no sense to have two free standing regional governments, King County and Metro, and voted to merge Metro and King County, the transit and sewer service, to the rest of the county government and enlarge the size of the county council once again to now accommodate the now 1.6 million people who live in this county, enlarging the county council to 13 members—created my district for which I am grateful—and elected a 13-member county council.

My point in giving you this history is—and we are now, by the way, involved in refining that. Refining our relationships with the basic model being that the cities—and there are now 35 cities in King County. The cities shall provide the direct local services, sewer—well not sewer. Roads, police, fire, those things, while the county will get out of the business of local service delivery and concentrate on regional things, functions that are too large for any one city to do. Transit, solid waste, public health, sewer and all the large macroeconomic growth management planning functions.

Now it is very interesting, Mr. Chairman, as I have been around the country on county business, you see a lot of communities in North America that have this mix of urban, suburban and rural. All of them are moving in slightly different directions to find the form of governments that works for them. Our model is somewhat based on the model used in metropolitan Toronto. But the point is that local governments on their own have developed very competent—sometimes maybe too much staff—but a strong ability to guide decisionmaking at the local level, and I believe that—and to create governmental structures which fit their own local circumstances and do not need to be—have a lot of decisions handed down to them from the Federal level. In fact, as I am about to illustrate, it can sometimes be very deleterious.

Let me give you two examples of where over-regulation at the Federal level has really caused a problem for King County government. And the first is the National Voter Registration Act, com-

monly known as the Motor/Voter Act. Now, Motor/Voter is commonly believed to be simply legislation that requires States and counties to provide the opportunity to people to register to vote when they are getting their vehicle registration. As the committee surely knows, it goes much further than that. This legislation is very, very specific in many, many ways in changing how local governments have to run elections. I will just give you one example. I have included here some comments in a very detailed 3-page memo from our director of elections on what this does to us.

The Motor/Voter Act requires us to allow people to register by mail and then to allow them to become permanent ongoing absentee voters. So quite literally it is possible for me—and I have actually—we had committee hearings on this—for me to register my 4 year old son to vote because he has a social security number. Register him to vote, sign him up to be an ongoing absentee voter and he can vote at home never being seen by an elections official, and I get two votes. I did not do this, although it might have helped with the stadium issue which just failed. [Laughter.]

It has caused incredible consternation among our elections officials who because of the specificity of the MVRA cannot guarantee the integrity of our elections process. There is no reason—[applause.]

I did not know there were so many fans for elections. But there is no reason for the Federal Government to get that specific in such a local matter of how we manage our elections process.

The other is a more broad issue and that is on transportation funding. I am a member of the executive board of the Puget Sound Regional Council which is the metropolitan planning organization of the ISTEA Act which distributes ISTEA funding. You may have heard from people in the transportation field that ISTEA is working. It is working, but even things that are working can be made to work better. I believe block grants will work even better. The various eligibility criteria for ISTEA caused Federal funds to be broken down into smaller and smaller funding pools. The State process tends to fragment the funding even more. The result is to divide and conquer the power of Federal resources into really ridiculously small chunks. One of the biggest problems with transportation investments today at the county level is our inability to fund major projects. All of the regional allocations of ISTEA funds in our area have been limited to small projects or small pieces of larger projects. None of the allocations have been more than $5 million and most are around $1 million. As a result, many small projects are built while a major intermodal terminal or a key bottleneck in our highway system goes unfunded. All of the small projects combined do not have the benefits one of these unfunded major projects has, and many of the small projects will be built anyway—could be built anyway with local funds.

Again, serving on the Regional Transit Committee and the Puget Sound Regional Council, I hear every day about the transportation problems specific to this region. And local block grants from the Federal Government instead of these highly reined in categorical funds could do a much better job crafting solutions for our specific problems.

Mr. Chairman, I will not take any more of your time, but I just meant today to illustrate that we here at the local level have developed strong competent governmental structures specific to our circumstances. It is, in fact, not only not helpful but actually destructive to have our hands tied by an over-intrusive Federal Government. I am confident that the new majority in the House understands these concerns and I just wanted to be here today to reinforce that and ask you to please reconsider things like how the specificity of the Motor/Voter Act are driving out important transportation and other dollars in a non-block grant form. Block grants give us the flexibility to do what we think is needed.

Again, thank you for the opportunity, Mr. Chairman. I look forward to answering any questions if it is your desire.

Mr. CLINGER. Thank you very much, Mr. Vance. Thank you very much for very excellent testimony. I think you should know that probably one of the impetuses for our enacting the unfunded mandates legislation, which is now law, was the Motor/Voter legislation which we had heard a great deal about—all of us had heard a great deal about from our constituencies. Unfortunately the unfunded mandates law is only prospective in its application, not retrospective. But it was clearly an example of something where we really were imposing a tremendous burden on local government without giving them the resources with which to comply.

Congressman Tate.

Mr. TATE. I appreciate your testimony. First, the most pressing question, did your son vote for you as part of his absentee?

Mr. VANCE. I am an honest man, Congressman. Fortunately, my election was not so close that I needed his vote.

Mr. TATE. Good. That is good to hear. Some serious questions though. I guess I would like to ask you as a local elected official, and you have worked at both the State and local level, are there things that the Federal Government is currently doing right now that you have not heard about as part of block grant programs that are going out to the States or the counties that we should be involved in that is clear—excuse me. That you folks should be involved in that we should get out of that you would say would be a uniquely local as opposed to what we are involved in right now?

Mr. VANCE. You know, that is—I think that as a county official we have less of a direct tie to things like Federal funding than the State legislature does. When I was thinking about this testimony today, I was trying to think of what types of programs the Federal Government provides money for with a whole lot of strings attached and the main one is transportation funding which is why I focused on the ISTEA Act.

Mr. TATE. Right.

Mr. VANCE. I think the other one may be—and this is not my area of expertise, but on clean water type funding, we do the metro sewer system and I am not on the Water Quality Committee and it is not one of my main focuses. But I know again, there is a lot of Federal involvement there that maybe is not necessary. But again, as a county official, one of the main things we do is transportation. It is a huge responsibility, and the county is the lead agency on that. And to have the ISTEA funds broken up in such small chunks that we cannot use them in a useful way is a major

problem in my opinion. Now you will find other county officials—maybe if Mr. Sims were here he would disagree with me—who believe that—particularly with transit—that local people are not enlightened enough in the need to get people out of their cars to make sure we put the money into transit. They might think we might cave into what the voters want and actually put more money into improving our road system. So that is the argument in defending these categorical funds. But I do not think there is a lot of justification for that.

But really, I think the two areas that I can think of with the Federal Government being very involved in terms of driving out money and then having a lot of regulations there is transportation and water quality.

Mr. TATE. OK. A follow-up question. You have been part of this merger and so forth. What has been your criteria for deciding what services you would directly take over versus which ones that you would allow to be privatized?

Mr. VANCE. Oh, that——

Mr. TATE. Because we are struggling with that today, we are going through program by program at the Federal level deciding—you know, asking the question: What best can be done by the local government? What best can be done by the private sector? But I would be interested in seeing the kind of criteria that you folks go through at the local level in making those decisions of what you are going to privatize versus what the county itself will actually run directly.

Mr. VANCE. That is another real good question. I do not think the criteria is very different from yours. It is mostly just common sense.

Mr. TATE. OK. Which has sometimes been lacking in the past——

Mr. VANCE. Right. [Laughter.]

Mr. TATE [continuing]. In Washington, DC.

Mr. VANCE. Congresswoman Dunn mentioned printing. The county has a very large and extensive printing operation, which some of us do not understand why it is not contracted out. A political fact of life however is, we have—I am not sure how partisan to be here, but we have a county executive who is not very accepting of the idea of privatizing when it might cost public employee jobs. So the council, although it is a 7 to 6 Republican majority, has felt that any major privatization efforts would simply be vetoed. One thing we are seeing on the reverse side is county government like all governments is downsizing now. Now we, thank God, cannot run a debt; we cannot borrow money and under this State's constitution we cannot raise taxes. County governments do not have the ability that cities do to levy or increase taxes, which is why if we did want to build a new baseball stadium we have to ask the State legislature for authorization to do that. With annexations and incorporations eating up our tax base counties are actually downsizing. And what we are finding now is pressure from public employee groups to stop the privatization of things that we are currently privatizing and put them back into the hands of public employees. So we are facing pressure just the other way. I was made aware yesterday that our Roads Department has contracted out a

lot of the engineering work in past to private engineers. Now there is a major effort to put that back in-house to protect jobs which are currently in the Roads Department. So, I think it is going to be the reverse, where we have been—we have done a relatively good job of privatizing, now we are going to have to defend some of that as we downsize.

Mr. TATE. Has your rationale been for privatization clearly a cost savings or that the private sector can just flat out do the job better?

Mr. VANCE. I think the fact that the private sector——

Mr. TATE. Or both?

Mr. VANCE. The private sector doing the job better leads to cost savings. But, I think that the county is going to have to look at that more and more. We are seeing actual decreases in our budgets because of our unique circumstances. We are in a city—we are in an area right now which is the fourth largest city in—fourth or fifth largest city in the entire State, Federal Way. I am sorry, that is not true. It is the third largest city in the county and it used to be county area. It used to be county area. It used to be unincorporated King County. When it incorporated and became its own city, we lost a big chunk of our tax base here. And due to that, county budgets are actually shrinking. So as we do shrink, I think we are going to have to look more and more, as we cut budgets, at privatization.

Mr. TATE. Any final advice that you can give—I know the other members have questions, but it would be interesting to hear any final advice you would have for Congress as we are going through this devolution, the new federalism, sending things back out to the States and local governments. I guess I come from the theory that the closer to home the better government you are going to get. It is a heck of a lot easier to drive down the highway to Olympia than it would be to hop on a plane at Sea-Tac and fly about 3,000 miles to Washington, DC or go to the court house where you work.

Mr. VANCE. My main advice is to trust us. [Laughter.]

Trust us to have—to be competent in our decisionmaking. We know best what the people back home think and we have large and expensive staffs as you do and we can make these decisions at the local level. I think that is actually very important. Every level of government—I found this having been a former member—a congressional staff person and then a State elected official and now a county elected official. Every level of government has disdain for the level below it and hatred for the level above it and jealousy. When I was a State legislator, we looked somewhat unfortunately down our noses at local governments and hated the Federal Government. I am finding now, at least at the county level, our staff is just as competent as the analysts that you and I worked with, Randy, in the House and the elected officials are just as intelligent, and to stop this idea of thinking just because someone is further down on an organization chart they are not as intelligent or competent as you are.

Mr. TATE. Thank you for your answers.

Mr. CLINGER. Because I know that Congresswoman Dunn has to leave here shortly, I would like to give her an opportunity to ask any questions she might have.

Ms. DUNN. Thank you, Mr. Chairman. I appreciate that. I do have to take off pretty soon.

Chris, I want us to take advantage of your experience in the legislature. We have been criticized a lot, the new majority, because we are doing the block grant programs which you alluded to. I would like you just to give us your thoughts on why members of a legislative body or a local government body like the one that you are a part of now are in a position to make better decisions. I would like you to talk about efficiencies that might come about from creative solutions. Just give us a sense so people will feel a little bit more reassured that as we decide where we are downsizing government to as Randy says, "devolve, power back to the local levels." What is really going to happen there, and are you in a better position locally to make good use of programs like welfare, for example?

Mr. VANCE. Oh, I think that is clearly the case. You are national officials and you know better the situation nationwide, but my conception of this country is, it is made up of hundreds and thousands of different unique communities and one size fits all just does not work. To put the power back on local elected officials I think is just critical. It is really frustrating to serve in office and have to tell your constituents I'm sorry, that makes a whole lot of sense but we cannot do it because another level of government about us says we cannot. I think again it is a matter of trust. I think the fact that the Federal Government has been so specific in its requirements over the years has come from a sense that we know better. You just cannot trust them back home to be as enlightened as we are. I think it has just led—it has led to the frustration which I think has created this new majority. I think you can trust that the same values that you all share will be shared by local elected officials.

Ms. DUNN. And as you say, they are far more accessible.

Mr. VANCE. Far more accessible. My district is—Congressman Tate's district is—my district makes up a chunk of Congressman Tate's district. It is about one-fifth the size, so I have a much more—and I live at home, and believe me, they call me night and day. My favorite story is being called at 9 a.m. on Easter morning of my son's first Easter when he was trying to hunt for Easter eggs and people wanted to yell at me about education reform. But we have hearings locally, not just in the courthouse. It is much easier for citizens to come to our meetings than yours.

Let us talk about transportation as one example. Next week we are having a 3-hour public workshop at the Senior Citizens' Center in the middle of my district to talk about Metro's 6-year transit plan. And that—I mean, citizens are going—and those are happening all over the county right now as we develop the new transit plan. It is very easy for citizens at 7:30 p.m. to come and be part of that hearing and make input, but that input is worthless if we cannot make real what they want because our hands are so tied by you. So that right there is the best argument for giving power to local elected officials. It is also, by the way, Jennifer, the whole point behind what we are trying to do here. King County is a very large and diverse county. It is very difficult for a lot of these folks to come down to the county courthouse. That is why we at the county level are trying to get as much of the local authority out to

city councils. It is a lot easier for the people in this room to go to the Federal Way city council meeting than the King County council meeting.

Ms. DUNN. Chris, let me just mention one thing. People smile when a political figure says "trust me." I saw it today. Do you not think that trust comes as a result of keeping promises?

Mr. VANCE. Yes.

Ms. DUNN. Do you not think that that commitment that we have made both at the Federal level and here locally, what you have done as a member of the King County Council relies—the trust level relies on your ability to keep the commitments you have made and do you not think this is going to be a big, big change in the political scene?

Mr. VANCE. Yes, absolutely. And you know what else this does, you—the ultimate feedback loop and the ultimate accountability loop in politics is our ability to get re-elected. If we are not doing what the citizens want they throw us out. Now you all are not likely to rise and fall in your next election based upon the specifics of road projects in people's homes. I mean you are elected on a different platform, but I am. And I think if I have to respond—and I have the power to respond more directly to what local citizens are saying about transportation because I have the decisionmaking authority, then they have more power because if they disagree with the decisions I make they can kick me out of office. But if we have this copout where I can say it is not my fault, the feds made me do this. We have not only taken power from me, we have taken power from the citizens.

Ms. DUNN. That is very articulate. Thank you very much, Chris, and thank you, Mr. Chairman.

Mr. CLINGER. Thank you, Jennifer.

The gentleman from New Mexico.

Mr. SCHIFF. Thank you, Mr. Chairman.

Mr. Vance, I will be brief. I think you have covered an awful lot. There are two things I want to mention. One I want to ask about is the Motor/Voter Act. It is my understanding that on top of everything else you have described about it, that the act says that county clerks or whoever is doing the registration cannot ask for identification.

Mr. VANCE. That is exactly right.

Mr. SCHIFF. I cannot imagine—I voted against that act and I cannot imagine—I mean, I would like to see the expansion of voter registration and I thought some of the ideas like making voter registration forms available in more places was a good idea, but I voted against that act because I think there are provisions that are an invitation to fraud.

Mr. VANCE. And not only that, we cannot purge from our roles people who have not voted in many years. Prior to the Motor/Voter Act, the State of Washington—by the way, the State legislature had already approved Washington State's own motor/voter act to allow people to register at Department of Motor Vehicles' offices without all these ridiculous strings attached. So the Federal law came in on top of that. We cannot ask for identification and we cannot purge people from the roles. Prior to this, if you had not voted in I think it was two Presidential elections, you were purged

from the roles. Now you can never purge people from the roles and it just invites, as you said, fraud. I mean, someone can get on computer records and try and figure out who has not voted recently, get falsified papers with relative assurance that they are not going to come into vote and go vote their vote.

Mr. SCHIFF. And go vote for them.

Mr. VANCE. And go vote for them.

Mr. SCHIFF. Right.

Mr. VANCE. Our elections officials are just apoplectic about this act, and to the point where they prepared a paper for me to hand to you today.

Mr. SCHIFF. I appreciate that, because again, I am sympathetic with the broad goal of increasing participation, making it easier to register to vote, but I do not think that act was the way to do it.

Let me just conclude my time with an observation. That is, we have been hearing all across the country two different views. One view is local officials like yourself saying trust us and a number of people saying we cannot give more authority from Washington to State and local officials because we cannot trust them. You know, maybe they will not—maybe they will not get the job done, whether it is maintaining a Medicaid program or you name it. And I just want to say that I think there is always a fair debate as to what should be done at the Federal level versus local levels. Just as you identified, maybe there are things better done at a county level then at a city level. I mean, that is a fair debate. But it seems to me first of all that we are all—the whole is the sum of its parts and the same people who vote for us vote for you. You know, I do not know why they believe that their local officials suddenly will abandon all civic responsibilities.

Second of all, I want to emphasize that we have had so much of a drift toward Washington during these last 40 or more years—60 years perhaps, that when people come to me over situations that even under our current system remain State and local situations, and I say, you know, you really ought to send a letter to the Governor's office about that or the State legislature, county commission or whatever, they look at me like I just dropped down from another planet or something. I mean, the public has been in large respects inundated with the idea that the only government that is around is in Washington. And in my opinion, there would be greater turnout and greater interest in State and local elections if there was a feeling on the public's part that that had more to do with their lives. I think that is the biggest reason for sending things back.

Mr. VANCE. Absolutely.

Mr. SCHIFF. With that, I will ask if you want to make any comment on what I have said?

Mr. VANCE. I could not have said it better. Congressman Tate and I were a part of a really rather fairly tepid debate on welfare reform when we were both members of the House. We tried to do what we could do on welfare reform given the Federal guidelines. I would love to see the debate on the floor of the State House if you simply block granted the welfare money and allowed the debate to take place there. The ratings on our new public access channel, TVW, which broadcasts the legislature would go through the roof and that would be good for citizen participation.

Mr. SCHIFF. Exactly.

I yield back, Mr. Chairman. Thank you.

Mr. CLINGER. Thank you very much.

The gentleman from Indiana, Mr. McIntosh.

Mr. MCINTOSH. Thank you, Mr. Chairman.

Mr. Vance, let me explore a couple of the points that you had raised in your testimony. One, you had talked about movement at the county level to reverse some of the goals—accomplishments you had had in the privatization area, specifically the desire to bring some of those services back in-house. I have really a general question and a specific one with it. As you structure the privatization and look at different areas, did you have ways in which you included the input of the existing employees in an effort to get them to see the advantages of that? And specifically, one way that I have heard has been done in our home State of Indiana. Indianapolis has privatized a lot of services. What they did was allow the employees to bid along with everybody else, and suddenly the employee becomes more like a private party player where they have got incentives to cut down on the cost and be the low bidder and able to keep the job. I was wondering if that might be one way, especially as they are saying let us bring some of these in-house, to say well we will not automatically bring it in-house but we will let you bid on it.

Mr. VANCE. I do not want to leave the committee with the wrong impression. Privatization and contracting out has not been a major issue at King County. We have been busy with a lot of other things and given the political makeup of the county council and the current county executive, I am not sure that a major effort to advance that type of a goal would go very far. But there are areas of local service delivery which have been over—in the past contracted out. And what we are seeing now is public employee units trying to get that back. But, yes, we are trying to do very much what you just said. We just had a unique meeting that has never taken place before, where the county council actually held a session at the Labor Temple where the King County Labor Council meets to talk directly with labor leaders to make them comfortable with what is happening as we go through this Metro merger and downsizing of county services, trying to build partnerships instead of an adversarial relationship. I think there is willingness there to have dialog over areas that logically should be contracted out and areas that should not. I do not know if we have gone so far as asking them to bid and compete, but the county council has developed a dialog with labor that goes farther than it has ever gone before.

Mr. MCINTOSH. I can tell you it works well if the union leaders are willing to be open minded and say—a lot of times they come in and say to you we think we are the best qualified to perform this job. We have got experience and we know what we are doing. And if they are sincere in that and you say well, we will let you bid then and be one of the players in this, often times they ended up winning the bids in Indiana. It was an interesting dynamic that emerged where it was a win-win situation.

Mr. VANCE. And yet you have to understand—I think what is happening here in King County is we have taken two governments and merged them and that is going to cost a lot of public employees

their jobs and they know it. The King County Council is committed to a cost savings of 25 percent to the citizens of King County had we not done this. Right now—in the past there had been two personnel divisions, one for Metro, one for King County; two fleet administration offices; two of everything. Metro managers were paid much more than county managers. What is happening today is probably literally hundreds of public employees are going to lose their jobs. Yesterday, the county executive announced that 34 top level Metro managers are getting their salaries cut. Cut, not decreased, cut significantly. That has caused a lot of angst and consternation among public employees within King County. That is kind of what we are dealing with right now, not exactly—you know, not more privatization. We have got to get through this first.

Mr. MCINTOSH. Yeah. No, I can see that would be a difficult time to work through for those people.

Let me ask you a more general question. The freshmen have put forward proposals to abolish four of the departments in the Federal Government. The Department of Education; Energy; Housing and Urban Development and the fourth one was the Commerce Department which is part of the budget in this Congress. Any views either in your capacity as a local official or as a citizen as to the wisdom of those proposals?

Mr. VANCE. I hope you are successful. Boy, do I hope you are successful. [Applause.]

Most of those are cabinet level agencies which were created relatively recently to respond to some crisis; the energy crisis and those sorts of things. I have some perspective. I used to work—I do not know, some members of the panel may remember Congressman Rod Chandler. I am a former member of his staff. A lot of those agencies never made sense. When I was in Olympia, my primary focus was education. I am a former assistant ranking Republican member of the House Education Committee. The Federal Government should have no role whatsoever in K through 12 education—none. [Applause.]

And on Energy and Commerce, those are clearly local decisions.

Mr. MCINTOSH. Thank you, Mr. Chairman. I have no further questions.

Mr. CLINGER. Thank you.

Mr. Vance, as you have gathered from the questioning, and I think you would concur, one of our objectives as we are traveling around the country is to figure out how we can really redefine the Federal, State and local relationship. I think many of us feel that the founding fathers, whose names are often taken in vain, really intended this to be a partnership. That there would be certain specified roles for the local government to play; the same for the State government, and only those things which could not be more efficiently and effectively done at the State or local level would be done at the Federal level. And over time there has been an aggrandizement by the Federal Government of many of those functions so that now we really have a relationship that is in my view more of a guardian/ward relationship. The Federal Government being the guardian and the State and local governments being our wards who we have to, you know, treat like small children and tell them what they can do and how they can do it. I really am convinced

that that has had the result of widespread cynicism about government; real distrust of government. There is a real sense across the country, extreme in some cases, that the government is the enemy and that anything that they do cannot possibly impact what goes on in Washington; therefore, I think our credibility has become less. I mean, Congress at this stage of the game has zilch credibility and I think that somebody—one person said to me in my own district, said, "You people have less credibility than an aluminum siding salesman." [Laughter.]

I hope there are no aluminum siding salesmen in the crowd. But that is pretty low. So, I think that really argues for the exercise of really trying to redefine what this relationship is and restore it to where it ought to be.

Another point you addressed, I think very eloquently, is the need for trust at all levels. But I will tell you that a local elected official said to me, perhaps in carrying out this idea of cynicism, do not—you know, do not give us block grants because we can blame everything that is wrong with government now on you guys and if you give us the power to do it, we have no fall guy. You know, I think that is a problem in some quarters. People are going to have to be much more courageous perhaps in that regard.

Mr. VANCE. That is right.

Mr. CLINGER. Finally, in my other capacity, I serve as vice chairman of the Transportation and Infrastructure Committee which wrote the ISTEA bill in which we tried to provide much more flexibility than existed before, particularly in the area of allowing local areas to use funds where they really had the need, whether it was transit or highways and to allow a lot more flexibility there. But I would be interested, if you would not mind just amplifying your concerns about that because we are going to be involved in reauthorizing the ISTEA legislation next year and I share your interest in trying to make that as flexible as possible in our next iteration of the ISTEA legislation.

Mr. VANCE. Well, my main—the main problem we find with the ISTEA Act is this region has a few big ticket problems. What is called the Mercer mess in Seattle; the need to complete the HOV lanes, especially on Highway 167 down in the valley. Just a few big ticket items. ISTEA chops the money up in such little chunks and we cannot aggregate it and throw it at fixing a problem, that is all spread out. It is just a matter, Mr. Chairman, of a rifle shot versus the shotgun approach. We cannot do what we need to do.

Mr. CLINGER. Where we have a discrete funding level for say, rails to trails, or funding levels for this or that.

Mr. VANCE. Right. And it is really political, I think. You have people who are big transit advocates and others who are pedestrian advocates or bike. You know, that sort of thing. It is a political agenda where we have to get these locals to put their money into transit because that is, you know, important. But what it leads to again is the money being chopped up into such little pieces that we cannot solve any of the major transportation bottlenecks in the region.

Mr. CLINGER. So would your suggestion then be that the Highway Trust Fund, which is presently the source of Federal funding

for highways and for transit, should just be block granted to the States?

Mr. VANCE. Yes. To the States and then——

Mr. CLINGER. That's the question.

Mr. VANCE. Yes. Well actually more to—the State is mostly just a pass through and then the real decisions are made at the—and this is another—I understand the logic of it, but the metropolitan planning organizations which are created—again, I am on the executive board of the Puget Sound Regional Council which is the MPO for this region. So you have 18 members from the four county region who are city council members, county council members. That is where the real decisions are made. That is problematic because it is a federated system, not a directly elected system. Nobody runs for office to be on the PSRC. But it is working to some extent because we have developed—we are forced to—because we have to share the money—sit down at the table and look the cities in the eye and agree on a process as to how the money is going to be divided. If the money were just block granted that would put even more pressure on us as elected officials but that is what we get paid for. That is our job. I would love it if it just came in the form of a block grant so the PSRC could sit down and say this year we are going to take all the money we can and fix and finish the HOV lanes. Get that done and then move on to another thing next year instead of dividing it all up.

Mr. SCHIFF. Mr. Chairman, I wonder if I can ask one question?

Mr. CLINGER. Certainly.

Mr. SCHIFF. I have a question for you, Counselor Vance, and I hope it is not a curve ball. It is sort of a philosophical question.

Mr. VANCE. A slider will be the order of the day tonight when Randy Johnson strikes out about 15 people—I hope.

Mr. SCHIFF. Well, I will try not to make it too much of a fast ball. When we are talking about more and more block grants, in other words, do not put any restrictions on it, give us the maximum—give us as local officials the maximum authority to use the funds as we see fit. That starts to raise a question about why are we in the block grant business. I mean, if we are going to simply block grant funds with no restrictions, then maybe what the Federal Government should do—and I am throwing this out as a hypothetical—is to reduce taxes by the amount of the block grant? [Applause.]

Mr. VANCE. You are right.

Mr. SCHIFF. If you want to raise the taxes back again, you go right ahead and do it.

Mr. VANCE. Right.

Mr. SCHIFF. One problem with the block grant—and I have already told you that I am in favor of giving more authority back to the States. But a philosophical problem with the block grant is we are responsible for raising the taxes and your level of government escapes that responsibility and I wonder if they should not be joined?

Mr. VANCE. That is a—you know, that is a great point and that is an issue to be debated at your level. The whole idea behind Federal funding for transportation and a lot of other things is to try and say that for areas of the country which are relatively not as

well off as others, they need some help and they need—they cannot raise enough money locally to provide the services or infrastructure for their citizens that need to be there. If you did what you just said, I would be fully supportive of that because Washington State has a relatively strong economy. Especially the King County region has a relatively strong economy. We are a relatively affluent area. We have the funds locally to provide the services and infrastructure for the citizens of this region. You are right, we should have to take the votes to raise the taxes if we wanted to do that. I think you would run into—now this again is your problem at the Federal level. You would probably run into disagreements from members of your House from less affluent States who really depended upon that Federal funding. It probably—I read an analysis in the newspaper recently of that type of an argument and argued that States, like Washington which has a strong local economy, probably could afford to go that type of route. Certainly, I would like to lower the tax burden on the people of this region.

Mr. SCHIFF. Well, you know, it is a subject with its pros and cons as you have identified, but I just wanted to make sure it was added to the equation.

Mr. VANCE. Absolutely, I would support that.

Mr. SCHIFF. Thank you, Mr. Chairman. I yield back.

Mr. CLINGER. Well, Mr. Vance, we thank you very, very much for your participation this morning and for your very excellent testimony. We appreciate your presence. Thank you again.

Mr. VANCE. If I may make one more point, Mr. Chairman, that just occurred to me.

Mr. CLINGER. Yes.

Mr. VANCE. I think that giving up power is painful and we are finding that at our level also. As I said, we are trying to decide from the cities what is local and what is regional. This city has decided to terminate its contract with King County for police services and form their own police department and that has caused some great consternation at the county level. But this city has decided that they want to direct that service here locally. So as much as it hurts our ego and stuff, we have to let our hands go and let that happen. So, I understand how difficult this sort of thing can be.

Mr. CLINGER. Right.

Randy, I think we have been joined by a mystery panelist.

Mr. TATE. Right. The mystery panelist that is a familiar face to many of us in this area. She is our local State Representative, Mary Ann Mitchell, who has served in the legislature going on her third year, her second term. I think I got that right. She is doing a great job down in Olympia. And the reason why some of the State officials like herself have not been able to be here is they have been working long and hard in regards to the whole issue regarding a stadium for the Mariners. But she came and she can only stay for a couple of minutes. She wanted to make some comments briefly in regards to the whole issue of block grants. Mary Ann has been real involved with social service issues in the past and been an advocate for those that have been disabled. And she wanted to make a couple of quick comments on the effects and her interest in the whole block granting programs. I think it would be good for the panel to hear from a State legislator if possible.

Mr. CLINGER. Representative, would you mind? It is a custom of our committee that we swear all witnesses.

Ms. MITCHELL. At them or in? [Laughter.]

Mr. CLINGER. Well, sometimes both. [Laughter.]

[Witness sworn.]

Mr. CLINGER. Let the record show that the witness indicated in the positive.

Thank you very much for joining us. We appreciate your being here and look forward to hearing from you.

STATEMENT OF MARY ANN MITCHELL, STATE REPRESENTATIVE

Ms. MITCHELL. Well, I thank you very much for allowing me to——

Mr. TATE. Is your microphone on?

Mr. CLINGER. You have to turn the switch on.

Ms. MITCHELL. There we go. That sounds better.

First of all, thank you for allowing me to squeeze in. I do need to go back down to Olympia to work on the stadium issue. I was delighted to hear Chris Vance saying that he was willing to take a vote on taxes. That will be happy news for Olympia.

Second, I would like to thank you for doing this kind of a meeting in a public school here locally. To bring the Federal Government to the local school district does more for education than any other single thing I can think of that you could do at this point in time. It is a benefit to the students here, to the facility and to the community to have this kind of a meeting here. So, I want to thank you all very much for doing this.

In terms of block grants, while we were waiting for the summit folks to come back out of the Governor's office—in fact, it was just yesterday—some of us with staff and some other members were discussing this. We are delighted with the block grant idea. We have no problem with that. We have long wanted to make those decisions locally. We feel that we know what is needed in our community better than the Federal Government does. So to have that opportunity to make those decisions locally is very, very important to us. The concern that we have is the rapidity, the rapid pace that this apparently is going to be happening in comparison to the magnitude of what we have to do to prepare for it.

When you are preparing a budget locally there has always been—or at least since I have been involved in government—that portion of the money that was going to come from the feds, and we just said well, that is Federal money and that is about as far as we dealt with it because it came with the regs attached. We did not have to have public hearings on how it was going to be spent. In fact, we could not have public hearings on how it was going to be spent. We could not make decisions about what to do with it. We could not decide that here in the State of Washington we needed more here than here. We simply had to go by the rules. We have to write our own rules now. We have to be able to make the decisions and do it responsibly on how that money is going to be spent and it will take us time to do that because we will go through the public hearing process; we will have to write bills; we will have to offer them; they will be amended. We have to do that not—I mean,

in so many areas. There will be transportation areas; agriculture areas; lots of human services areas. In so many different areas where as the pendulum swings the other way we will have to make the decisions. We do that willingly but it cannot be done overnight. So our concern is that it be done very orderly in terms of how quickly the States can assimilate it. And I suspect some States will want to do it more quickly than others. I think here in the State of Washington you will find us very eager to be involved in this process and to get the rules and regs written as quickly as possible in order to be as fair as possible to as many constituents as possible.

Mr. CLINGER. Thank you very much.

Any questions?

Mr. TATE. I have just one quick question, and it is one that comes up in—first of all, thank you for taking the time out. I know you are on an incredibly busy schedule. One of the issues that comes up quite a bit is as we block grant programs back out to the States that are really directed maybe at a school district or at the county service level, what kind of commitment can we get from the State to make sure that that money gets to the right places because I hear that quite frequently. Is the school lunch program going to get to that school? Is the State going to take some of the money for whatever particular program to use it to balance their budget instead of sending it out to the localities? Has that been a focal point—or out to local governments. Has that been a focal point making sure that those—as we are block granting the programs out, as you are preparing the regulations and how they are going to be handled, to make sure that they actually get out to the people that need it? Not to just, you know, add to the bureaucracy in Olympia, but to actually get it all the way down to, you know, the school district or to the social service program, or to transportation and the list goes on.

Ms. MITCHELL. Randy, I can assure you in terms of the House that that is our mission. That is our goal, local control. We truly want those elements to be local decisions. Now, as you know from a State level, we have lots of local areas in the State of Washington. Our concern will be to make sure that we are fair to each local area but that we not burden them with our regs taking the place of your regs, but rather that we make the fair decisions on what money goes to which local area. But how that money is used within those local areas must remain a local decision. That is a commitment of this legislature, and I certainly hope that it will be an ongoing commitment that we not usurp the local authority to make those decisions. That is where people know what is going on. That is where the people know where the pain is and where the remedies need to come.

Mr. TATE. OK, thank you.

I yield back my time.

Mr. CLINGER. Thank you very much for joining us. We really appreciate your contribution very much.

Ms. MITCHELL. Thank you for being here.

Mr. CLINGER. We are now going to recognize our next panel of distinguished witnesses to appear before us. I understand that one of the panelists will be here a little later today, but we do, I be-

lieve, have the other members of the panel and if they would come forward at this time as I introduce them. First is Tom Vander Ark who is currently the Federal Way School District Superintendent. Prior to his position in education administration he led a distinguished private sector career by leading a management consulting practice and providing 7 years of post graduate instruction at the University of Denver. We are glad to have him join us this morning.

Paul Sommers is executive vice president of the Northwest Policy Center at the University of Washington and is the co-author of a leading annual publication on the State of the Northwest economy. He is an expert on collaborative strategies to enhance small firm competitiveness. We are delighted to welcome you here this morning, sir.

And finally, Richard Zimmerman, who currently serves as the executive director for the Washington Performance Partnership and is associated with the Washington State Quality Award Foundation as a board member.

Gentlemen, we welcome you all. As you heard, we have a custom of the committee to swear all of our witnesses.

[Witnesses sworn.]

Mr. CLINGER. Let the record show that all witnesses indicated in the positive. We also would note that your written testimony will be included in its entirety in the record and we would ask you, if you possibly can, to hold your remarks to 5 minutes. We are not going to hold you right to that, but if you could get as close to that as possible, we would appreciate it very much.

Mr. Vander Ark, would you like to lead off?

Mr. VANDER ARK. I would be happy to.

STATEMENTS OF THOMAS J. VANDER ARK, SUPERINTENDENT, FEDERAL WAY SCHOOL DISTRICT; PAUL SOMMERS, EXECUTIVE DIRECTOR, NORTHWEST POLICY CENTER, UNIVERSITY OF WASHINGTON; RICHARD ZIMMERMAN, PRESIDENT, WASHINGTON PERFORMANCE PARTNERSHIP; AND JOHN CARLSON, CHAIRMAN, WASHINGTON INSTITUTE FOR POLICY STUDIES

Mr. VANDER ARK. Mr. Chairman, committee members, welcome to Washington. On behalf of our school board and Principal Ken Olsson here at Thomas Jefferson, we really appreciate you being here and I applaud the work that you are about. I will keep my comments very brief.

I would like to start by pointing out that I think the Federal Government and school districts are facing many similar issues. I think we really have a common context that we are dealing with and I will summarize a couple of factors really quickly.

We are both trying to understand how to deal with very dramatic social change.

Second, we are trying to understand how to deal with a new economy, a technology driven economy that is really changing the needs that taxpayers have and certainly it is changing the needs that our graduates have.

Third, and partially in response to those first two, the Federal Government and school districts have seen a real mission creep where we have tried to do more for more people.

And finally, both school districts, public school districts and the Federal Government are both facing a real crisis of confidence today because of those first three factors.

I will make a couple of just very specific recommendations and then look forward to the committee's questions. The first is one that was mentioned in your first panel discussion and that is that we need to dramatically streamline educational funding. I found coming from the private sector that educational funding is incredibly convoluted. Our funding comes from the Federal Government, the State government and from local tax collections and the money that we send to Washington comes back to us in the form of a myriad of programs with very specific program requirements that make it very, very difficult for us to operate. I believe really strongly in local control; that the teachers and parents of this school are very capable of making sound educational decisions for the students at this school.

I will give you two quick examples. We have an elementary school that is about a mile from here and it receives some Title 1 money for remedial programs. It does just so happen that Title 1 changed from Chapter 1 and the Federal Government funds come to us now with new requirements. We designate different kids than we did last year. So we have had to shuffle teachers around this year to deal with that. The needs have not changed but a program manager in Washington tweaked the program and the ripple effects are felt here. So we have designated teachers teaching labeled students in labeled classrooms and in some situations that is appropriate, but in many it dramatically hinders an appropriate response developed by teachers, administrators and by parents. The same sorts of things are true about vocational education funding which is both State and Federal and I think would be far more effective if program decisions were made at a local level.

Now to the question of eliminating the Department of Education. As I have said, I would like to see all Federal programs and their associated requirements eliminated. The difficulty that the education community has with eliminating the department is eliminating the funding that goes along with it. I think that can be accomplished again by a means that were discussed earlier of dramatically reducing Federal taxes by implementing a low flat tax and allowing school districts and States to fund basic education. That could be implemented with a phased out block program and allow school districts and States to augment declining Federal revenues and replace those Federal revenues.

The last point that I make is a secondary issue but it is an increasingly important one as we do face declining revenues, and that is that school districts need to have limited liability because of the interpretation of Federal regulations of what is constituted as free and appropriate education. We face real serious problems, especially with special need students and how the courts are interpreting our liability for medical, social and educational services. It is unfortunate that for 80 or 90 percent of our students every decision we make is made in an economic context. We need to create

the same kind of reform for the special needs programs that has been created in the medical community where decisions are made in an economic context. And so, some things that would help there would be requiring mediation, limiting damage awards and a program of cost capitation.

I look forward to your questions and comments.

[The prepared statement of Mr. Vander Ark follows:]

FEDERAL WAY
PUBLIC SCHOOLS
31405 18th Avenue South Federal Way, WA 98003 941-0100 or 927-7420

Superintendent
Thomas J. Vander Ark

Board of Education
Linda Hendrickson
Ann Murphy
Helen Pepper
Gail Pierson
Orlando Trier

House Committee on Restructuring
Testimony of Thomas J. Vander Ark
Thomas Jefferson High School, October 6, 1995

Introduction. On behalf of the Federal Way School Board and Principal Ken Olsson, Welcome to Thomas Jefferson High School. The following statement represents my own views and not necessarily those of this community, the School Board or my fellow employees.

A Time to Focus. The federal government and this school district, though very different in scale, share the need to focus. In response to unparalleled social and economic change, both organizations have experienced substantial "mission creep." In attempting to be everything to everyone, both entities have stretched their budgetary boundaries and struggled to provide a broad array of quality services. These factors, coupled with growing consumerism, have created a crisis of confidence with our customers. Our response must be a new sense of focus on a core set of services that are most important to our customers.

Common Context. The first role of a civil servant is to understand his or her constituent's reality. My own attempt to understand the challenges of public education can be summarized in four factors. To some extent these factors pose similar challenges to all federal, state and local government entities.

- *Social change.* Over the last two decades, we have grown more diverse in every respect. Fundamental change in society has added richness as well as a new set of challenges to our society. Applying a "one-size-fits-all" approach to service delivery is becoming increasingly unsuccessful.
- *New customer requirements.* Technology has created a new economy in which participants without basic skills find it difficult to be self sufficient.
- *Mission creep.* We have attempted to address many of these challenges with government solutions. This has created a culture of dependency and has strained over-stretched tax payers.
- *Crisis of confidence.* The expert model is dead. Students, parents and taxpayers either want to be actively involved in decisions that effect them or they have reached a point of indifferent apathy. In either case, they have grown skeptical of government institutions and their ability to solve problems and provide effective service.

Reconceptualizing Service Delivery. This common context shared by government and education has created an urgent need for fundamental change. A three step approach can be used to rethink what we do and how we do it. The first step is to understand the current reality. This "as-is" picture should identify problems and opportunities for improvement. Creating a picture of the future is the second step. It must be (or become) a widely held view of possibilities including a sense that a successful transition is possible. The actual transition often includes pilots prior to full implementation and requires significant training, support and follow up.

Federal Way School District is an equal opportunity and affirmative action employer.
The Affirmative Action Office number is 941-0100

Operating Principles. Transforming any organization is a difficult journey, but government entities, being "of, by, and for the people," pose a particular challenge. The following operating principles are ones that I find to be important:

- *Focus.* Concentrate on important customer outcomes that are within the charter. Get rid of everything else.
- *Involvement.* Involve as many people to be impacted by the change as possible.
- *Local control.* Design solutions that address issues as close to the customer as possible. The Department of Education knows less about what is appropriate for the children of this community than our teachers and parents.
- *Speed.* Given mass discontent and high velocity change, the speed with which we transform our institutions will determine our viability.
- *Accountability.* Perhaps more than anything, people want to see their tax dollars used responsibly. In Federal Way, we are building a broad-based report card of indicators that are important to our community.

Specific Recommendations. Without discussing specific problems (and contrary to my own advise), I will conclude with three recommendation.

- *Limit liability.* School districts have become the provider of first resort for medical and social needs while being funded for and judged by educational results. Mediation should be required, damage awards should be limited, payment for private school placements should be prohibited, and cost of care should be capitated.

- *Eliminate the Department of Education.* Eliminate all of the special programs and associated requirements. Implement a short term block grant program to allow states and districts to adjust funding levels. "Best practice" research is already carried out by not-for-profit organizations.

- *Implement a low flat federal income tax.* As necessary, states and local school districts can replace federal funding without increasing the average tax payers total tax bill.

Mr. CLINGER. Thank you very much, Mr. Vander Ark.

Mr. Sommers.

Mr. SOMMERS. Thank you.

As you noted in my introduction, I am an economist and I do a lot of work with economic development organizations at the State and local level around the Northwest. I think there are interesting examples in the field of economic development that, while it is not a major Federal function, may provide some models for things that you can do with other aspects of government at the Federal level.

One thing that we have noticed in the economic development field is that too many of the decisions that businesses have to make seem to fall right in the cracks in between a variety of government agencies. It is difficult enough to get a decision out of a single agency, whether it be at a Federal or a local level, but as soon as you have to deal with two or three or six, you find out that nobody is in charge and there is no way to get your situation resolved.

We are starting to see I think some creative responses to that kind of problem where we find ways of integrating the services so it looks to the business person like a single entity is out there and that somebody in fact is in charge and a decision can be made. They can get their buildings built, their businesses in function.

We have an example in the Seattle area that I think is very important to us. This is a very trade oriented area. We are a bit more export oriented than most parts of the country and we have a great plethora of entities out there that are supposed to be helping businesses figure out how to get into export markets. Some of those are private non-profit entities; some of them are funded by State government and some of them are Federal Government services. We are going to have a trade center built by the Port of Seattle in the near future where all of those entities are sitting under one roof where the staffs can get to know each other. Where the programs can look a bit more like a seamless whole to a business person that is coming in there looking for some help to get into export markets.

We have also had an interesting example in the eastern part of the State of using new technology to perform that kind of integration of services without actually having to build the building and put everybody under one roof. The Palouse Economic Development Council discovered the WorldWide Web and decided that there were a number of other nearby economic development councils in other counties which were offering some specialized services. There was a nearby county that knew a great deal about some specialized capital programs that can assist firms with either equity or debt capital. Palouse knows a great deal about international market development because of some innovative projects in that county. The story went on like that for two or three other nearby counties. By linking them all together through a WorldWide Web site businesses can now access those specialized services from inside their own business establishment just using a little bit of computer technology.

That was successful enough that the State decided that its services could be marketed through the Web site and that has been added on. And they are now seeking to add on some organizations in neighboring States. So entities in Idaho and Oregon may join what would be a rather, hopefully, popular way for business to find

a site within that whole Inland Empire region in eastern Washington, Oregon and parts of Idaho, and also to access whatever services are available out there.

I think those are some models that one could apply in human services delivery or some other aspects of government.

The other thing that I think we are turning to more and more in the world of economic development is the use of a non-governmental entity to deliver its services. If you are a business person and you are looking for some help with one or another kind of problem, it is not a natural act to walk into a government agency and ask for help. That is not why you are in business. You prefer to deal with other private sector entities. So a response that has been used in a number of cases is to deliver services through some sort of non-profit, private entity that looks and feels and acts like a private business.

I think there is a really interesting example of that in Chicago in a very industrial neighborhood, about 700 firms there called the Greater North Pulaski Development Corp. This entity deals with all three levels of government. It is a small business development center through a contract with a Federal agency. It is a technology transfer center through a contract with a State agency and is a little city hall to get city permits and licenses issues resolved through a contract with the city government and the city of Chicago. But it is a private entity that is serving just 700 firms within that industrial neighborhood in Chicago. This is an excellent model for the delivery of services using a creative private sector mechanism still accomplishing some public purposes.

The last thing I wanted to mention is as we go about reorganizing and reinventing government, I think it is very important to pay careful attention to what we are doing and make sure that we are actually getting the results we want rather than just depending on any of these sorts of mechanisms. We need careful evaluation of what we are doing. And I think there is a very good example within the Federal Government and that is the National Institute of Standards and Technology Manufacturing Extension Program. That program has ramped up very, very quickly within the last couple of years, but they have done so with very vigorous evaluation requirements. So we are learning what works or what does not in real time as the program is operated. It has been a very, very different approach to the expansion of a program than I think I have seen in anything else affecting economic development in the last decade or so. So, I commend that effort to you as a way of making sure what we do in reinventing government is actually working. It is the kind of evaluation process that should be part of every government program.

With that, I stop and invite your questions.

[The prepared statement of Mr. Sommers follows:]

Models for Successful Government Reorganization

Testimony to the House Committee on Government Reform and Oversight
October 6, 1995

by

Paul Sommers, Ph.D.
Executive Director
Northwest Policy Center
University of Washington

I am a regional economist and director of a public policy research group that focuses on strategies to improve the vitality of the economy in the Northwest states of Alaska, Idaho, Montana, Oregon, and Washington. With the support of private foundations and an occasional public sector contract, my staff and I have investigated many economic development, workforce, rural, and environmental issues, searching for viable strategies to improve the competitiveness of firms and the welfare of the people of this region. In the last seven years, we have encountered a number of situations where government reorganization could have removed blockages to improved vitality or increased the efficacy of government services. In a few cases, the Northwest has become a model in implementing such reorganizations. In other cases, sad to say, the best models are still of successful efforts in other regions. I will briefly discuss three such models below.

Integrating Service Delivery

The implementation of laws mandated by the Congress, the various state legislatures and local councils is a complicated business, and a complex bureaucracy has grown up to issue permits, review plans, and enforce regulations affecting businesses and workers. Many managers and employees dread having to deal with this bureaucracy, and routinely report their frustration with overlapping and inconsistent rules administered by multiple levels and agencies of government with little apparent concern for the frequent cases that fall precisely in the cracks. As bad is it is to get a decision out of a single agency, when two are three are involved, perhaps from different levels of government, there seems to be no path to a reasonable conclusion, no established process to follow. Businesses often fall into the regulatory cracks when they apply for permits and licenses for logging near streams or in viewsheds, construction of a building with an unconventional design, perhaps on a land with non-standard geological features, or development of a facility that will involve new technologies with novel risks. Individuals who suffer an occupational injury, or get laid off and try to access retraining programs frequently end up in the same status, and have fewer resources to cope with this Catch 22 situation.

Several strategies have been successfully employed to cope with the problem of integrating the processes and programs of several separate agencies that happen to have a role in a particular case. A simple, obvious, but seldom used tactic is to appoint a case manager who assumes responsibility for timely resolution of a case. If each agency leaves the matter up to its own separate and often isolated officials, only the business or individual client can perform the integrating, case manager role, and this is not where the expertise or the responsibility should lie. Responsibility can rest with the agency that is first contacted by the client, or it can be assigned in a quick meeting of all agencies involved after first contact. This approach was recommended by the Northwest Policy Center several years ago to a state economic development agency that had problems coordinating its activities with other state and federal agencies, as well as local economic development organizations. Our suggestion that the case management role be assigned to the local economic development organizations was not eagerly accepted; state officials were unwilling to give up their turf and suggested that the local organizations had insufficient capacity to handle the caseload. These sorts of objections are common, but very real obstacles to the case management approach.

A second approach is to co-locate or cross-train staff of agencies that often must coordinate their actions. Local governments have frequently used this approach in dealing with land use actions, and state governments are increasingly turning to one stop centers for re-employment of displaced workers. The Seattle area is developing a one stop center for international trade using a building constructed by the Port of Seattle that will house state, federal, and non-profit organizations that assist businesses in developing export markets. Co-location avoids some of the turf issues that the case manager approach inevitably reveals, while making it much easier for the client to access multiple programs. Virtual co-location is now becoming a possibility with use of electronic networks, offering yet another alternative.

Two examples of a matrix approach to service integration come to mind at the state and federal level, both involving responses to the dislocations of the timber industry and its workforce caused by decisions to provide vast habitats for spotted owls. The State of Washington established a multi-agency timber team to coordinate activities of at least a half a dozen state agencies involved with economic development or provision of human services. The timber team is a multi-agency matrix approach involving temporary assignment to the timber team but a permanent affiliation with the home agency. Each agency designated one or more persons to sit on the inter-agency team to work out joint policy approaches. In addition, human service organizations dealing with unemployment, welfare, retraining, and other services established jointly staffed offices in several of the impacted areas. The team existed during the last four years of the Gardner Administration and was continued during the tenure of the current incumbent, Gov. Lowry. It was also successful enough to invite imitation by the federal government.

In announcing the economic revitalization aspect of his Northwest forest policy, President Clinton established a similar inter-agency team based in temporary offices in Portland, Oregon. This team was tasked with carrying out the development of

coordinated policy among Interior, Agriculture, and other affected agencies. In addition, it implements the decisions of an interagency management committee that responds to the recommendations of state level and regional Community Economic Revitalization Teams (CERTs) made up of state and local representatives. The preceding cumbersome sentence reflects another of the complicated realities of government. The CERTs were supposed to allow integrated strategies to bubble up from the bottom, from the communities most impacted by the virtual closure of the federal forests. However, legal wrangling resulted in a determination that the CERTs meet the definition of federal advisory councils, precluding them from actually allocating federal dollars. So a third level committee of federal officials only has to actually allocate funds based on the recommendations of the purely advisory bodies involving the people directly representing affected areas. From all reports, the inter-agency coordination aspect of the revitalization program has been modestly successful. Resentment over the purely advisory status of the CERTs lingers to some degree however.

Both of these models involve more or less *temporary* inter-agency teams. In my opinion, these strategies can only be successful as temporary bodies; otherwise they just become another layer of bureaucracy slowing down the decision process. The longer term solution for problems that do not naturally wither away is to achieve better coordination and integration during the legislative process. In many instances, agencies would not be struggling with inconsistent regulatory requirements if the problem had not been created by the legislative branch of government.

Short of physical co-location, modern networked computer technology can ease the burden of processing applications for both clients and bureaucrats, and efficiently referring clients to multiple sources of help for which they qualify. Job service centers may be able to take basic applicant information for multiple agencies, saving the worker interested in retraining or job referrals from having to answer the same questions a dozen times and eliminating duplicative clerical work on the agency end. With some cross training and efficient network design, intake workers can often point applicants to additional programs for which they qualify. Examples can be found in the communities of Bellingham and Renton in this state.

Incorporating Market Mechanisms in Service Delivery

Market mechanisms are insufficiently used mechanisms to focus and improve government services. In the field of economic development, there is a tendency to provide services for free, especially if it is the service the provider knows how to provide. A better approach, staunchly advocated by economic development organizations in Europe, for example, and used by a few organizations in the U.S., is to provide services according to a fee schedule, and to use the clients' collective willingness to pay to structure service offerings over time. Supply will respond to demand, if one allows demand to be articulated. The usual approach of offering a service for free to each and everyone who walks in the door guarantees that their will be too many clients to efficiently serve, and that the service will be limited in quality and depth.

Efforts to move towards use of market mechanisms are fraught with difficulty, however. For example, Oregon's Economic Development Department assists firms who want to enter foreign markets through a staff of skilled international market development experts. For a while, firms were asked to participate in contracts for these services; the contracts laid out expectations for both the public and private parties, and involved fees that partially covered the costs to state government. However, issues were raised concerning competition with the private sector, conflicts of interest, and availability of staff to service requests from other firms in the state who did not want the depth of service involved in the contracts. Therefore, the state has ceased use of the contract approach, but is instead trying to balance in-depth work for groups of firms with similar goals with separate but shorter contacts with other firms.

In international market development, government is often in a unique role to help business because of its own foreign contacts and because of foreign business expectations about government roles. Firms that take advantage of these contacts and expectations should be expected to pay for the costs. The level playing field and conflict of interest issues are valid issues as well, and must be resolved. Oregon is trying to resolve them by establishing a new international trade committee in the legislature that will work with the agencies and interested businesses to devise a set of rules that make sense.

Europeans are often more flexible on these matters, and some models are apparent that could be adapted to U.S. circumstances. Free help may be available from a public or semi-public entity such as the Swedish Trade Council. However, after a limited period free service, a fee schedule is applied, and after a period of work on a fee basis, the entire arrangement may be privatized, including movement of a valued consultant from the public Trade Council payroll to a private payroll. To ensure a seamless movement from public to private, and to ensure that the public sector consultants are up to date, the Trade Council contracts with private consultants for no more than one half of their time. Thus, there are built in incentives to move the client to a private relationship over time. Playing fields can never be exactly equal, but the Trade Council staff claim that their system breeds such a demand for private sector trade consultants that the private industry tends to support the Trade Council program. Another interesting feature is that the Trade Council itself is a public-private partnership, further blurring the lines between public and private in Sweden. Some aspects of this system may be useful at the state or federal level in the U.S.

In British Columbia, the problems encountered in Oregon are avoided by contracting with a semi-private entity to carry out trade promotion. BC Trade offers many services on a fee basis, and is increasingly organizing firms into groups or networks with similar and compatible goals. This allows cost efficient trade promotion services to be offered to smaller firms. The semi-private status and businesslike climate of BC Trade insulates the provincial government from some of the conflict of interest and equity issues that doomed the fee-for-service approach in Oregon. A provincial ministry still exists to handle information requests and other traditional limited service programs public

economic development agencies provide, permitting BC Trade to offer in-depth services to a paying clientele. At the same time, BC Trade is seen as closely aligned with government, giving it a degree of publicness that is useful in conducting its business abroad.

Using Public-Private Partnerships to Deliver Services

The Swedish Trade Council and BC Trade examples bridge over into another type of government reorganization, use of public-private organizations to deliver services. I use the phrase "public private partnerships" to describe hybrid organizations that pursue agendas developed in cooperation between the public and private sectors. I deliberately focus attention on public-private partnerships in contrast to the term "privatization" which often refers to setting up private organizations to compete with public ones. With the difficulties of creating a level playing field while also pursuing essentially public goals in mind, I find the partnership approach is often more attractive.

Successful models of semi-public organizations include industrial networks and associations. WoodNet on the Olympic Peninsula in Washington has used funds from foundation grants and public contracts to provide significant market development capacity to very small woodworking companies whose idea of marketing was often limited to loading the station wagon with knick knacks and heading for the weekend craft fair. This level of marketing supported hobbies but few job and significant income generating businesses. Now these same small firms are participating in regional and international home shows, producing catalogs for national distribution, and getting their craft products into juried TV marketing shows. Networks have sprung up all around the country with assistance from state and federal programs. Examples can be found in textiles, aerospace subcontractors, metal fabrication, plastics, wood products, and other industries, with goals ranging from export market development to workforce skill development to ISO 9000 qualification. Their ability to leverage limited public support with private philanthropic funds and their own private resources produces a targeted regional development impact that serves all participants' needs.

Sometimes an association is a better model than a network. In Oregon, a state appropriation has assisted the formation of a secondary wood products association that is developing training programs for member companies and teaching financiers how to evaluate industry members seeking debt and equity capital. In Washington, the state provided staff services to launch associations in software, biotechnology and environmental technology that are now self sufficient. However, state government still provides targeted international marketing assistance because the associations and their members feel that this service can be provided better by the government than by a private agency. This is a nice example of a maturing partnership between public and private sectors in rapidly growing industries that provides benefits to both sectors.

An excellent example that shows how complicated yet useful a hybrid partnership model can be is found on the west side of Chicago. The Greater North Pulaski Development Corporation provides SBDC small business counseling and technology transfer services

to over 700 industrial companies in its neighborhood. It also functions as a little city hall to handle city permit and license matters. In addition to these activities aimed at the bottom line of its members, it also functions as a civic or community organization. It organizes neighborhood cleanup drives and finds sponsors for the youth sports teams. It finances its efforts through fees, contracts with state and local government, and foundation grants. The closest analogy to this hybrid organization I have seen is the sectoral service centers in Emilia-Romagna, Italy; these centers have been quite important in restructuring the northern Italy economy into one of the entrepreneurial powerhouses of Europe. An example closer to home and inspired by the Italian examples is the Garment Industry Development Center in New York City. Cut and sew shops, and well as textile product designers, belong to this Center which was established with public, private business, and labor support. It offers maintenance and master sewer classes to members, and organizes quick response networks among member firms to meet retailer needs in a rapidly changing high fashion women's clothing market.

These partnership models have many lessons for local and state government, and private sector leaders interested in regional development. However, they seem to be more troublesome when extrapolated to the federal level. The electronics industry consortium SEMATECH comes to mind; it was praised by some but excoriated by others. At a national level, the diversity of private sector interests makes it far more difficult to form effective partnerships, and antitrust issues are more difficult to manage as well. One implication for the federal government is to be alert for the opportunity to support such local partnership organizations by contracting with them or granting funds for the rapidly diminishing resources of business oriented grant and loan programs. In addition, programs in such departments as Small Business, Labor, and Commerce may find it advantageous to deal with groups of firms rather than individual companies to extend the reach of their services.

Conclusions

Successful examples of government reorganization can be found in creative efforts of local and state government to reinvigorate their local and regional economies. Strategies used at these levels of government include:

- service integration or one stop shopping,
- incorporation of market mechanisms in service delivery, and
- public-private partnerships

Some of these ideas can be directly used in federal government, while others can be incorporated as responsibilities are shifted from federal to state or local government through block grants and other means. Remaining federal service providers can often work through innovative local organizations using some of these ideas.

One or two words of caution are in order. "Re-engineering of government" is often used in the same breath with "cutting the budget." These two phrases are not synonymous. As many private sector leaders have learned, re-engineering is a long term and sometimes expensive investment process. For example, Boeing executives involved with their quality improvement program have had a great deal to say on these topics in

the last few years. Cost saving and improved quality will come down the road, but one cannot always expect short term cost savings if significant re-organization is to be achieved. Second, many of the ideas being tried by state and local government are experiments that have not yet been sufficiently evaluated. Re-organization needs to be accompanied by significant evaluation efforts to make sure it is working. The National Institute of Science and Technology's Manufacturing Extension Partnership program is a model in this regard; extensive evaluation efforts have accompanied the series of grants to establish local extension centers in industrial centers around the nation. Similar efforts should accompany the initiatives resulting from this hearing.

Mr. CLINGER. Thank you very much, Mr. Sommers, for your very helpful testimony.

Now, Mr. Zimmerman, please.

Mr. ZIMMERMAN. Mr. Chairman and members of the committee, thank you for the opportunity to appear here.

I would like to share some points about our Washington Performance Partnership, the vision for our agencies, our approach in where we are, and just emphasizing this is one of the set of activities that are going on down at the State to try to improve our operation.

Washington Performance Partnership was enacted in March 1994. The central theme of the act is to improve State operations in terms of customer focus, accountability and efficiency. The act established two entities. One is the council. It is a decisionmaking organization. This is made up of the senior State elected officials, the Governor, the majority and minority leader of the House and Senate and two State-wide elected officials, which are currently our State auditor and the superintendent of public instruction.

There was one other entity established which was in what they call an operating committee and this is a public/private entity made up of agency people; agency heads; senior staff from the legislature; the head of the largest union in the State; along with private members from Boeing, Weyerhaeuser, Pacific Lutheran University to name a few.

This legislation is unique in that it provides the opportunity to make some significant changes by the formation of a legislative executive and a private/public partnership. The opportunity that we have taken as our immediate focus is in the executive branch and more specifically in the agencies.

Two key elements are key to our vision. The first is that the execution of sound management practices is critical for successful implementation of agency objectives. And today, as many others have mentioned, State government is facing the same change pressures that impacted private industries throughout the 1980's. We have people just coming from—State customers just coming from buying a pair of shoes at Nordstrom's going in to get their drivers license and expecting, and should be getting, exactly the same type of service. So the change where customers have learned more about service through the private industry is impacting State very heavily today. Given this, we recognize that we the government agencies that are focused on their mission and goals need to be very clear about what they are to do. We need agencies that are flexible and adaptable that can deal with changes, and these are changes that come from any direction; that they understand their customers, how to serve their customers, and they continually work to gain efficiency and effectiveness, and this is not just in small steps but sometimes in very large jumps.

Our approach. We have developed a management model that is a framework, a structure against which we are encouraging agencies to innovate. A few comments about it. It is a framework for managing an agency. It contains the basic management principles that one needs to pay attention to. It concentrates on leadership. We are demanding—and I will use the term demanding—that leaders do their job, which is to set the direction and use that direction

to motivate, focus and align their agencies on the effort to attain the what or the outcome.

The model is systemic, meaning we just cannot put our efforts in any one particular place because then it becomes unstable. We need to look at all management practices. It relies heavily on feedback, self-assessment and proactive interfacing with the customers, the citizenry and the legislature. We are providing a set of whats not hows. We are leaving the how up to the agency. So there are no forms, no detailed specifications and no requirements that we want agencies to go back and redo it in the new format that we are talking about.

Our approach has some very basic beliefs. The first is, we believe that agencies must fix themselves. Input and feedback—input and feedback from external sources is important and very valued, but we have found—and this primarily comes from the private sector—that without structure and the basis for improvement within the agency and without strong agency focus and management these recommendations and ideas do not get the impact desired. This model includes the structure for this improvement and focus. We need to put in place effective employee empowerment, and this is not just sending employees through a 3-hour class and telling them they are now empowered. We need to make sure that employees understand their role in the agency and are empowered to achieve it. Implementing this model assures that understanding takes place.

We must make sure that our agency direction ties to the expectation of our board of directors which is the legislature, as they are the primary interpreter of our public wealth.

A few other points about the management model. None of this is rocket science. None of it is new, we have not invented a thing. It works because it has been proven in successful private businesses all across the United States and we are not alone. This past weekend I had the opportunity to talk with folks from Georgia, Oklahoma, South Carolina and Utah. Their approach is similar. Texas, Oregon, Alabama and other States are also moving in this direction. While it is not new and it is not complex, it is still difficult. It is difficult to take the time away from the daily battle. It is difficult to draw that line in the sand that sets our direction and it is difficult to establish the yardstick against which we will measure success. In short, it is difficult to lead but that is what we are talking about.

Where we are today is we have concentrated our efforts on our major agencies. We have trained what we call an agency internal consultant—one of the senior management people—in the concepts of the model; for them to take the information back and work with their senior management team within the agency; understand the principles; determine how best to apply them and to develop their own implementation plan. And we say their implementation because the agency has to own this process, and further because we recognize agencies differ. They have different requirements, different needs and they are also in widely differing places on the management continuum.

Our Governor is initiating executive briefing sessions with all the agency managers during the next 2 weeks—the agency directors in

the next 2 weeks. The objectives of these sessions will be to gain agency director support and to ensure they clearly understand the model and their role in implementing it, and currently there is active implementation going on in most of these major agencies.

We have a framework here the State can use. It concentrates on leadership and direction so that improvement efforts are focused on the areas critical to success and we are building that solid foundation that allows us to design successful change to respond to the pressures for now and the future.

Thank you.

[The prepared statement of Mr. Zimmerman follows:]

Mr. Chairman, members of the committee, my name is Richard Zimmerman and I am the Director of the Washington Performance Partnership. Thank you for the opportunity to appear today.

I would like to share with you some points about the Washington Performance Partnership, some key learnings at the state, our vision for our agencies, our approach, and where we are today.

Washington Performance Partnership

The Washington Performance Partnership was enacted in March 1994. The central theme in the act is to improve state operations in terms of customer focus, accountability and efficiency. The act established two entities for direction and guidance.

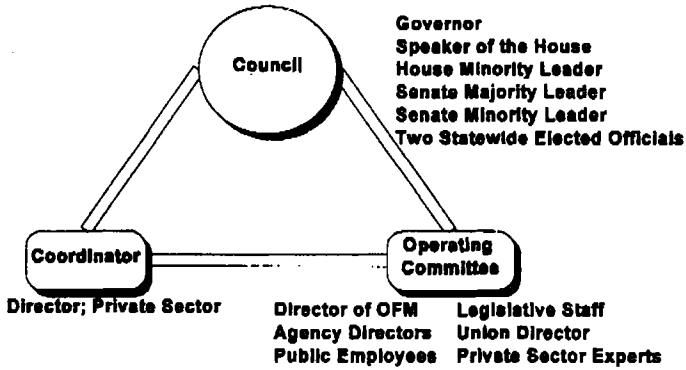

The Council is the decision-making and direction setting body. It is comprised of the Governor, the majority and minority leaders in the House of Representatives and the Senate and two state-wide elected officials, currently the State Auditor and the Superintendent of Public Instruction.

The Operating Committee is targeted at program design, support and implementation. It is staffed on a 50/50 basis with private and public representation. Included are agency directors, senior Senate and House staff, agency supervisors, the director of the largest state union, and private sector leaders from organizations such as Boeing, Weyerhaeuser and Pacific Lutheran University.

This legislation is unique in that it provides the opportunity to make significant changes by the formation of a legislative - executive and private - public

partnership. The opportunity that we have taken as our immediate focus is the executive branch and in specific the agencies.

I have spent the majority of my career at Weyerhaeuser, was asked to coordinate this effort and joined the state, full-time, in November, 1994.

Key learnings at the state

With the overall goal of impacting state government through customer focus, accountability and efficiency improvements, we identified two key learnings that stood out from the rest.

The first is sound management practices. The execution of sound management practices is critical for successful implementation of agency objectives. We found exceptional agencies where they understand the practices' importance and this is evident through their actions. And, most agencies had some elements of sound management practices in place. But we did not find agencies where the management practices were integrated into an overall management system.

The second learning has to do with change. Private industry has been dealing with rapid change since we first felt the pressures from the Japanese quality products. Today, state government is facing the same change pressures that impacted private industry only there is a key difference. Pressures for governmental change did not occur at the same pace and time as in private industry. They lagged behind. And it's not unlike water backing up behind a dam. Now the spill gates are open and the pressures of change are buffeting government. And they are having a tough time with it. State government's customers have learned from the private sector what good service is. After buying a pair of shoes at Nordstroms, our state customers go down the street to get a driver's license and expect the same treatment.

Our vision for the agencies

Given these key learnings; the importance and application of solid management practices and the knowledge that change is occurring, and as Toffler said many years ago, will continue to occur at an ever increasing pace, we recognized that we need government agencies that:

- Are focused on their mission and goals; the what they are to do
- Are flexible and adaptable
- Can deal with changes; changes that come from any and all directions
- Understand their customers and how to serve them
- Continually gain efficiency and effectiveness, and not just in small steps, sometimes in large jumps

Our approach

We have developed a Management Model that is a framework, a structure against which we are encouraging agencies to innovate. A description of the Model is in the attached text so I will not go through it in any detail. There are a few comments I will add:

- It is a framework for managing an agency, containing the management practices one needs to pay attention to.
- It is concentrates on leadership. We are demanding that leaders do their job - which is to set direction and to use this direction to motivate, focus and align their agency to attain the "what" or the outcome.
- This Model is systemic. We cannot just put our management efforts in any one place. All elements must be included or the structure is unstable.
- It relies heavily on feedback, self-assessment and proactive interfacing with customers, citizenry and legislature.

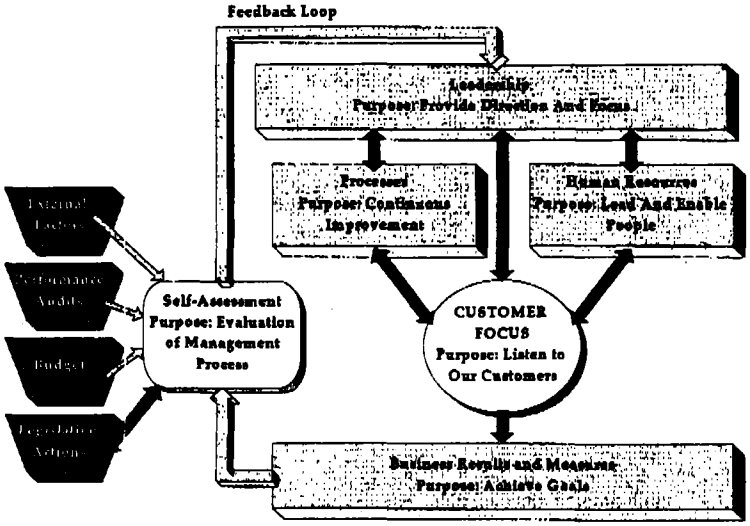

In this Model we are providing a set of "whats" not "hows". We are saying to agencies that this is what you must take into consideration and accomplish if you are going to be successful. We leave the "how" up to them. So there are no forms, no detail specifications and no requirements that agencies must "redo" what they've already done to conform to our "way".

Our approach is formed from some basic beliefs, many of these from the collective experience of our Operating Committee - the public/private entity:

- Agencies must "fix" themselves. Input and feedback from external sources is important and valued. But we have found that without the structure and basis for improvement within the agency and without strong agency focus and management, the external recommendations and ideas simply do not have the impact desired. This Model includes this structure.
- We must put in place effective employee empowerment, where all employees understand their role in the agency success and are empowered to achieve it. Implementing the Model ensures this understanding and empowerment takes place.
- We must make sure our agency direction ties to the expectations of our Board of Directors, the legislature, as they are our primary interpreters of public will. The Model emphasizes the linkage of the agency mission to the statutes and directions from the legislature.

Let me emphasize a few final points about the Management Model:

- None of this is rocket science.
- None of this is new. We haven't invented anything.
- This works because it's been proven in successful private businesses all across the United States
- We're not alone. This past weekend I had the opportunity to talk with folks from Georgia, South Carolina and Utah. Their approach is similar. Texas, Oregon, Alabama and other states are also moving in this direction.
- While it isn't new or complex, it is difficult. It's difficult to take time out from the daily battles at work. It's difficult to draw that line in the sand that sets our direction. It's difficult to establish the yardsticks against which we'll measure success. In short, it's difficult to lead but that's what this is about.

Where we are today

We have concentrated efforts on our "major" agencies, major by size and scope. In these agencies we have "trained" an internal consultant - a senior agency manager - in the Model concepts, elements and in facilitating its application in their agency. This internal consultant's role is to work with their agency senior management team to help them understand these principles, determine how best to apply them, and to develop their own implementation plan. We say their implementation plan because agencies must "own" this process and because we recognize that agencies differ. They have different pressures, different demands, and they are at different places on the management continuum.

Our Governor is initiating Executive Briefing sessions with all the agency directors during the next two weeks. The objectives of these sessions will be to gain agency director support and to ensure they clearly understand the Model and their role in implementing it.

Currently there are active implementations underway in most of these agencies. Several have gone back to square one, for example, starting with the mission statement, goals and objectives. But many already had positive work underway and are folding that into the Model.

In addition, we have formal interest from Ohio, Oregon, King County - Metro Task Force, City of Seattle, and Thurston County to better understand the Model for possible application there.

Summary

We have a framework that all state agencies can use.

We concentrate on leadership and direction so improvement efforts are focused on the areas critical to our success.

We are building the solid footing that allows us to design successful change to respond to the pressures from now and the future.

We are in the early stages of our journey with many avenues yet to travel down but we feel confident this basic Model will prove its merit as our guide.

Thank you.

Mr. CLINGER. Thank you very much, Mr. Zimmerman.

We have been joined now by our fourth panelist on this panel, John Carlson, who serves as chairman of the Washington Institute for Policy Studies and also I am informed hosts the highest rated afternoon radio talk show in Seattle. I thought that was Dr. Krane but I guess it is you. [Laughter.]

He originated the phrase of "three strikes and you are out" anti-crime concept and writes a widely circulated weekly column that appears in newspapers across the State of Washington, and we are delighted to have you with us, Mr. Carlson. It is a custom of this committee that we swear all witnesses so as not to prejudice any witness. Would you object to being sworn?

[Witness sworn.]

Mr. CLINGER. Let the record indicate the witness indicated he did not.

Mr. Carlson, the floor is yours.

STATEMENT OF JOHN CARLSON, CHAIRMAN, WASHINGTON INSTITUTE FOR POLICY STUDIES

Mr. CARLSON. Mr. Chairman, thank you. First, I would like to thank all the members of the committee, particularly those not from Washington State for taking the time to visit western Washington today and to Congressman Tate and Congresswoman Smith also for helping to arrange and be here for this committee hearing.

Mr. Chairman, today's hearing is about creating a 21st century government. My first request is that you not wait that long. [Applause.]

We may not know how to solve all the problems in our society; we do know how not to solve them. In August 1964, Lyndon Johnson—President Johnson launched the war on poverty with the following words, "The days of the dole in our country are numbered". They are 30 years numbered so far. [Laughter.]

And clearly it just was not working. I would like to suggest, Mr. Chairman, that Congress adopt a guiding standard for everything it does that can be summed up in a single sentence. If we were not doing things this way to begin with, would we start doing so today? In other words, would we create a Rural Electrification Administration today? I do not think so. Would we in this day and age of cable TV and dozens and dozens and dozens of channel selections, would we create a public broadcasting system? Probably not the best use of Federal taxpayers' money. Businesses live or die by this standard and, of course, government policies succeed or fail. The problem is getting government to acknowledge either A when it has failed or sometimes B when it has succeeded and no longer needs to be involved and get out of the way.

I think today's welfare state is a perfect example of a failure that has not been acknowledged and not been dealt with until this Congress came along. I, for one, would like to commend this Congress for sending welfare—being prepared to send welfare back to the States. I think these problems can best be solved much closer to home than at the Federal level. It is a good start, but I would emphasize that it is only a start.

Government anti-poverty programs tend to cope with problems. In fact, Senator Daniel Patrick Moynihan a Democrat from New

York once wrote a very intriguing book about government entitled "Coping". In most major cities, you will see homeless shelters that read operated by the government and some by local private organizations, usually churches. Seattle has one. It is called the Union Gospel Mission. Now from a distance, like say from Washington, DC—[laughter.]

These two shelters are doing the same thing, but they are not and it is important to notice that and to acknowledge that. Government homeless shelters are coping with the problem of homelessness. They dole out food and shelter to people who want it. Private or church run shelters are curing the problem of homelessness. Their aim is to actually change behavior that made someone homeless in the first place, and ladies and gentlemen of the committee, that is what I would suggest we need to start doing in the 21st century. We need to start curing our problems instead of coping with them. Now that does not mean that government at the Federal, State or local level is necessarily the solution to these problems. In some ways government has exacerbated these problems. Sometimes the government can do its best by simply not doing any more harm.

The homeless shelters that work best—I am thinking of one with a national reputation in Chicago. While 40 percent of the people in Chicago's homeless shelters go back into the shelter system, only 5 percent from this one homeless shelter. And I asked the woman who conceived of and runs this—and she is a nun from the Chicago Archdiocese—and she said my biggest problem is the Federal Government and local government does not help much either, because what we want to do requires that we have the maximum flexibility for exacting standards. And the institutions that give freedom its greatest capacity to help people live better lives—I am thinking of the church and synagogue, the family, the school and the neighborhood—all of these institutions are weaker now than they were 30 years ago. Government is much bigger and much more expensive and much more bureaucratic than it was 30 years ago. I do not think this was intended. I think it was in fact accidental, but it is not a coincidence. And I would request that this Congress before voting on any future legislation ask itself the following question. Will this vote strengthen those institutions or will it weaken those institutions? Because it is precisely those things, family, school, neighborhood, the church and synagogue where not only will we find the cure for some of these problems in society today, but we will prevent these problems from expanding.

Thank you.

Mr. CLINGER. Thank you. [Applause.]

Mr. Carlson, thank you for an excellent statement. Before I recognize Congressman Tate for any questions he may have, I do want to acknowledge the arrival of another member here who is joining the committee, Congresswoman Linda Smith from the Third Congressional District of the State of Washington. She serves on the Small Business Committee and also the Resources Committee. We are delighted to have you join us, Linda. Would you have any comment that you would like to make?

Ms. SMITH. No.

Mr. CLINGER. Oh, very good. That is unusual for a Congressperson, I will tell you. [Applause.]

Congressman Tate.

Mr. TATE. Well, first of all, I would like to thank the panel. I think this has been incredibly insightful. As someone who serves in Congress, I saw a lot of nodding heads on our panel as each one of you were talking.

I will start with John Carlson for starters. I agree with you. The people I talk to in regards to a 21st century government want it today. In fact, more people are afraid we will not go far enough in our efforts than the fact that we may go too far. I hear that over and over while I am home.

You made a couple of comments regarding block grants and sending programs back out to the States. How much—how much should the Federal Government be involved in setting the criteria for these programs or should they be sent out just as one lump sum? The debate over welfare, for example, in regards to a child cap versus just letting States decide if there should be a child cap, or should there be work requirements, or should it be 2 years or 5 years. How involved should they be?

Mr. CARLSON. Congressman Tate, the less the Federal Government has to do with welfare policies the better. [Applause.]

We have 50 State governments that can serve as laboratories for showing, you know, the Nation and each other which program works best, which policy will work and I think it is very debatable what will work and what will not work. We definitely know what will not work. We know that a guaranteed Federal income will not work. We tried that and experimented with it. We know the current system does not work. Most importantly, we know that even if a program is intended to do the right thing—there was welfare reform in 1988—Washington, DC is too far away to make it work effectively. Therefore, I would say that not only when it comes to welfare, but a host of other domestic problems in this country or domestic issues in this country, including education, the Federal Government should simply send as much back to the people as possible.

Mr. TATE. Thank you very much. You hit it right on the nose. The other part of my question would be, you referenced getting churches and synagogues and other private organizations more involved. Sometimes these organizations are also saying do not change the system at the same time they are currently involved in social services. How do we work through that?

Mr. CARLSON. My view is that many of these church based institutions that have lobbied have acclimated themselves to the status quo. They do not necessarily like it, but they have gotten used to it. Another thing I would point out is that you will often hear different testimony from people who are on the street level dealing with problems than you will from people who are lobbying you in Washington, DC. And again, the reason I would like to thank the committee for being out here today is for getting closer to the people. And the closer you get on not only welfare and homelessness and education, but law enforcement—you know, talking to police officers rather than police officials and what-not, the closer I think you are going to get to the actual solution.

Mr. TATE. Thank you very much.

A couple of other questions for Mr. Vander Ark in regards to education. I could not agree more. I think that we do need to get rid of the U.S. Department of Education and the people who fill those many buildings. [Applause.]

And I use this example over and over again, the fact is that the people that fill that big building back in Washington, DC that spend billions of dollars on every single year do not have a clue where Thomas Jefferson High School is; do not have a clue where the Federal Way School District is; do not know how to pronounce Puyallup let alone spell Puyallup. [Applause.]

So why should they be making the decisions regarding the needs and concerns of those children because our superintendents are paid to do that job. We have parents; we have school board members; we have got teachers; we have got concerned citizens.

I would be real interested to see—as you say, as we downsize—your feeling regarding—and give us some insights—how much of your time and your staff is spent filling out just Federal paperwork that goes along. For example, the Goals 2000. As the money comes so do the strings that are attached. How much of maybe your time or your staff's time calculated into dollars, if you know. If you do not know, it would be great if you could follow up because I would like to equate that to how many lost teachers are not in the classroom because we are spending money filling out paperwork from the Federal Government just so we can get more money. I would be very interested to find out what the real cost is for teachers in the classroom.

Mr. VANDER ARK. That is a good question. It is frustrating for me to look at our budget and know that—we have made investing in the classroom a real priority and we spend about 70 percent of our budget in the classroom. We have our administrative cost down to less than 12 percent and several percent—several percentage points, which for us is several million dollars is involved in program administration. It is because of the complex nature of State and Federal programs that we need a very well trained staff of program administrators to try to understand the complex legislation that guides these programs. So, I am sure there is an opportunity—I guess I would say it is difficult for us to continue the work that we are trying to do of reducing administrative cost and invest in a classroom with all of the legislation that exists.

Mr. TATE. OK. Thank you very much.

Mr. Chairman, my time has expired. I yield back.

Mr. CLINGER. Thank you very much, Mr. Tate.

Before I recognize Mr. Schiff, in line with your remarks about bloated bureaucracies, and there certainly are bloated bureaucracies in Washington as I suspect there are at all levels of government, I am reminded that one of the largest in terms of people and bureaucracy is the Department of Agriculture. They tell the story about a Department of Agriculture employee on the steps of the Department who was sobbing uncontrollably, was terribly, terribly distraught. He was asked why are you so upset? What is the problem? Did somebody in your family die? He said, no, my farmer died. [Laughter.]

Every bureaucrat had his own farmer. [Laughter.]

The gentleman from New Mexico.

Mr. SCHIFF. Thank you, Mr. Chairman.

Mr. Carlson, if I am connecting the right person with the right background here, I believe that you were instrumental in helping to pass Washington State's three strikes and you are out law; am I right about that?

Mr. CARLSON. Yes.

Mr. SCHIFF. Let me tell you that those that rate us on our votes in Washington and those who put labels on us—which I have never liked because I have always tried to cast individual votes on every issue—usually rate me on the moderate side of the Republican Party. I can tell you though that on the issue of law enforcement, you cannot get to my right very easily. You have got to pry to get in there. So, I would like to ask you how the three strikes is three violent crimes as written. When was that passed?

Mr. CARLSON. We passed the first three strikes you are out law in the country in November 1993; 76 percent of the people voted for it.

Mr. SCHIFF. And how many people have been sentenced under it?

Mr. CARLSON. It applies to the 40—it applies to 40 violent felonies, all class A felonies and violent class B felonies and about 50 up to now have been sentenced. The purpose of three strikes—and again, this is the difference between a local decision versus a Federal omnibus crime bill. Federal bills have a law enforcement side and a sentencing side and a social program side and what-not and frankly so do State governments. My suggested alternative is that instead of one big shotgun blast, you have a series of rifle shots. Three strikes you are out was aimed at a particular problem in crime and that is violent criminals who continue to commit violent crimes. Believe it or not, two-thirds of all violent crime in this country is committed by less than 10 percent of the criminal population. It is a small number of criminals who do most of the damage in society. And so, we crafted a law that aims specifically at those people. The good news from law enforcement personnel and now statistical evidence also emerging is that it has been a wonderful deterrent. As one police official told me, it is the one law that actually scares these criminals and most criminals are not usually mindful of the law. This one has got their attention. This one has some bite.

Some States have more severe three strikes laws. California's is tougher. Georgia is up to two strikes you are out on some crimes. Other States have three strikes you are out in name and it does not really apply to many crimes regrettably. It was great to hear the President of the United States, during his State of the Union Address say three strikes you are out, but the Federal legislation only applies to a very few crimes.

But we sent violent criminals a message and word is they are receiving the message.

Mr. SCHIFF. Well, let me just say congratulations on that effort. I was a career prosecutor before I went to Congress, but I also defended criminal cases for a couple of years, so I have seen that side. I want to agree with you—I might differ a little on statistics, but I want to agree with you that probably the No. 1 problem—not the only problem but the No. 1 problem we have in fighting crime is the career criminal. You are quite correct that there are more

than one three strikes and you are out bills out there and laws. We have one in New Mexico that I do not know has ever applied to anybody because it was written in such a way that you have to kill somebody on Tuesday night if there is a full moon before you get strike one. [Laughter.]

And the legislature did that so they could pretend they had done something when they knew they had not.

Mr. CARLSON. We once had a legislature like that. [Applause.]

Mr. SCHIFF. Let me say with respect because I am not here to tell Washington State what to do. Let me say that I think the broader the three strikes bill the better. In my judgment, a career criminal—first of all, the so called non-violent criminals are not always non-violent. A burglar is caught, a burglar might be dangerous. Second of all, in straight economic terms, a career thief—even assuming that person is non-violent, which again, is an assumption I would not make, a career thief steals day in and day out, not just on those three occasions they happen to be caught. And it is my judgment that the three strikes and you are out, nationally and locally should be for all felonies because even on a straight economic basis, not considering violence, a career thief will steal more than the maximum estimation of what incarceration costs. And it is not that I am in love with prisons, it is not that I do not want to see alternatives for appropriate people, but once a person is self-identified as a career criminal which means—I know you know this, but just to make sure it is emphasized—not three felonies in a row. But a conviction, going through the process, if you decide to do it again, a conviction and so forth. Once a person has self-identified themselves as a career criminal, we need to get them off the street, and to me it is whatever kind of crime. But I want to congratulate you on the efforts you did to get that passed in the State of Washington.

Mr. CARLSON. Thank you. And to conclude, Congressman, now when somebody commits their second strike, a judge warns them, you understand this is your second strike, your next strike will be your last. We have already had some people who have committed their third strike which not only shows that they are a career criminal, but they are kind of dumb [laughter] and probably belong behind bars.

Mr. SCHIFF. But your issue about the—if I can have just one more second?

Mr. CLINGER. Surely.

Mr. SCHIFF. Your issue about deterrents is a significant one. As you stated, California has the broadest three strikes and you are out in the Nation as far as I know. And I have heard indirectly from California law enforcement officials that there are a lot of criminals with two strikes in California who are packing up and leaving. There is a lesson there, I think.

Thank you very much.

Mr. CARLSON. Here too.

Mr. CLINGER. Are they moving to New Mexico or where? [Laughter.]

Mr. SCHIFF. No comment.

Mr. CLINGER. The gentleman from Indiana.

Mr. MCINTOSH. Thank you, Mr. Chairman.

I noticed that two of the panelists urged that we think about using non-governmental organizations or non-profit organizations, churches and others, Mr. Sommers and Mr. Carlson. I wanted to, one, mention an issue that Randy and I have been working on in our subcommittee and see if you have any thoughts if we are on the right track of solving the problem. We discovered that there are a lot of non-governmental organizations that receive Federal grants in order to help implement a lot of programs that spend most of their energy and activity not really helping people in the real world but turning around and lobbying Congress to spend more money. We call it welfare for lobbyists and have a bill that will end that by making it improper for someone who receives the taxpayer money to spend more than 5 percent of their funds on lobbying.

In the course of looking at this problem, we heard from several charitable groups who said there is a real problem once somebody starts receiving a Federal grant and turning their activities toward deciding that this Federal program is the solution to poverty, the solution to cleaning up the environment, whatever the problem is, that they lose some of their purpose in fact. It has in fact been destructive to a lot of those private organizations in the community, the very fact that we have these Federal programs that they spend their energy lobbying us about, rather than spending their energy helping people in their neighborhoods and in their own communities. We have got the bill that we are looking at right now of ending the welfare for lobbyists and making it so they cannot lobby. But there is also this broader question of do you change the nature of these private institutions when you start having them become arms of the government in implementing government programs that way. I was wanting to hear from both of you if you have any comments or thoughts on that.

Mr. SOMMERS. Just very briefly. I think it goes to the nature of the performance standards you apply along with the money that you might be handing out in a grant or a contractual relationship. If you apply a whole bunch of standards and regulations and red tape to the organization, it is going to spend a lot of time dealing with that instead of providing the service. I mention the example of NIST because that seems to be an example of where the Federal agency is saying tell me what you are going to accomplish. Tell me how to judge your performance, what your benchmarks are going to be and we are going to come back after a period of time and see whether you have met those goals that you specified. If you have met them, you might be a candidate for more money and if you have not, you probably are not going to get any more Federal money. I think that is a better approach than a lot of standards and regulations. As far as the lobbying aspect, go right ahead.

Mr. MCINTOSH. Thank you.

Mr. CARLSON. I believe in clarity and I think if an organization is focused on providing a service then its focus should be on that service. If it also wants to change public policy, then it should create another organization and have that organization deal with public policy.

Mr. MCINTOSH. Yes, that is my view exactly, and the one that deals with public policy, I do not think the taxpayer needs to subsidize. That can be the individual.

[Bell rings.]

Mr. MCINTOSH. School bells bring up my next question. Mr. Vander Ark, I was very interested in your comments about how the Federal educational programs end up creating difficulties for teachers and school leaders to accomplish their mission and in part have led to mission creep, I think was the term you used, where the schools are being asked to not only educate young people but provide a lot of the things that families traditionally do; meals in the morning and maybe after school and some of the other activities. It has been my experience in talking to teachers that they are frustrated on two levels. One is the liability level that you mentioned. If they do not follow a certain set of regulations, particularly in dealing with categories of students who are labeled disadvantaged, and the second level in the funding area where in order to receive Federal money they distort what they would see as the priorities locally. A teacher in my home State of Indiana said that they were about to eliminate the one teacher who taught gifted and advanced programs because there was no Federal money, but they were looking to hire two or three other people for their Title 1 programs. I was wondering, do you think that it would be possible for you to use the funds that you now have much better if you did not have those two pressures on you from the Federal Government?

Mr. VANDER ARK. Absolutely. And I think probably do a better job with fewer dollars. I mean, the needs that we are facing are significant, but we clearly could be more efficient without all of the targeted funding. I think the real fundamental issue for you to consider in regards to education is whether you ought to be in the business at all. [Applause.]

And my sense is that the only fundamental reason that you ought to have anything to do with education is if States can demonstrate that they cannot fully fund an education program. But other than that, I think we need to create a transition for the Federal Government to exit K–12 education and we need to build a plan for States and for school districts like this one to fully take on that responsibility. I think it is our responsibility. I think that really is the question that you are asking about, all the programs that we have talked about, should we be in this business at all. And that is a question you need to ask about health and welfare and agriculture and commerce as well as education. We also need to see a commensurate and dramatic, I think, reduction in Federal taxes that allow communities like this one to build rational, responsible responses to the needs that we face.

Mr. MCINTOSH. Thank you, Mr. Chairman.

Mr. CLINGER. I am now pleased to recognize Congresswoman Smith, and again thank her for joining us on the panel today.

Ms. SMITH. Thank you, Mr. Chairman. I think first of all I might ask——

Mr. CLINGER. Turn that on, Linda.

Ms. SMITH. Excuse me.

Now, I will try again. Thank you, Mr. Chairman.

I would like to ask a general question and I am going to ask it first of Mr. Carlson because I have been reading the privatization research done by your institute and it is coming out I think in seven segments, and so, I have been following that. When I kind

of abruptly got sent to Congress last year I terminated the project I was working on and it was basically privatization, auditing and trying to find a way to restructure our government programs at the State level. When I got to the Federal level, I found that we were going to be—the devolution of taking the Federal programs and moving them to the States, changing the way government served, would mean that the State—what I was doing when I left was probably even more important than I realized as we downsized and sent programs home. You cannot send welfare—two agencies that are duplicating, unclear in their purpose, often not even sure when you talk to the administration what their goals are or what their legal mandate is. And with that in mind, what do you believe this State should do first to receive the Federal programs and the changes? If you could be king for a day, what would you do to receive this devolution of welfare, Medicaid and other programs as this change comes to you? Mr. Carlson, I know you have been involved in it, but Mr. Sommers you have addressed it.

Mr. CARLSON. I will be real brief so Mr. Sommers can address it. [Laughter.]

We have actually—at the Institute, we have prepared a report on State government privatization. What works—what standards work for a good government at the Federal level I think also work at the State level, and that is what government should not do it should privatize. It should have private organizations handle it if they can operate and deliver the service more efficiently at lower price for the taxpayer. I think that privatization is not just an idea or, you know, an option. I think it should be a guiding ethic as it was quite frankly in Margaret Thatcher's Britain which really helped fuel the conservative revolution that we saw in Great Britain in the 1970's and 1980's.

Ms. SMITH. I would like to ask too in that—another part of this, and I will address this. Texas did a sweeping audit of all agencies at the same time to be able to figure out where to start and there were good and bad in that audit. I have reviewed it and the techniques they used. But the reality was, there was a great amount of benefit in at least knowing where to start and what you had. Would you advocate that too, and any suggestions you would have as to where we start, and what would you do different if you are familiar? And if you are not, do not answer.

Mr. CARLSON. Yes. The answer is, again at the State level, absolutely and encourage cities and counties to do exactly the same.

Mr. SOMMERS. If I could add just one thing, I think the answer I would give to your question was anticipated by the way you asked it and that is when you have got agencies that cannot specify what their mandate is or what they are trying to achieve, we probably should not be giving them more money. We have got to be clear about purpose. The world is complicated and we keep loading more and more things onto particular agencies until they do not know what they are doing anymore. And in that sense, I think the efforts to really go back to the fundamentals and re-examine what it is we are trying to achieve and to get rid of the layers and layers of mandates on these agencies is essential so that they do know what they are doing. They can answer that question and then perhaps we can

give them some responsibility from another level of government to carry out.

Mr. ZIMMERMAN. Let me add some comments about Texas. It was not an approach I would take to start with, but they evolved very nicely. They have got some very good results in terms of directions—what are we in the business to do—from the State, and they are looking at that and measuring it.

Oregon's process evolved too with their benchmark statements and they have ended up with statements that say this is what we in the business are doing. Utah, Alabama, other States are doing that same thing, and they are understanding then what their directions are, which then provides very clear focus to the agencies. Then the agencies can really have something to work with and say now we can mold our agency to fit that direction. That is very important.

Ms. SMITH. So you would recommend we benefit from their—what they did. But also, I guess I would ask you this and anyone can comment on this and give me your insight. I have worked with the government now long enough to know that when you audit from within, often you know what to cover up and you also do not see things that you are around. I have audited—you know, I have been involved in business audits and when you are there, you do not necessarily see the things that you could fix because you are used to them. Do you advocate outside audits and in what form? I guess someone briefly, we are out of time.

Mr. CARLSON. I can cover it in one sentence, though I wish I had more time. And that is, the Federal Government has had the Inspectors General and that is what I would turn loose on the States. The Inspectors General are independent auditors and they go in as independent-minded investigators and root out what they see are opportunities to save money.

Ms. SMITH. Thank you.

Mr. SOMMERS. Could I add one point to that before we go, Mr. Chairman?

Mr. CLINGER. Certainly.

Mr. SOMMERS. I believe we do need external performance audits. I believe those performance audits should come in from the perspective of we need to try to find what we can do to improve and not to find the guilty to be able to hang anywhere we are at. And at the same time, if we have external performance audits, we ought to be managing our agencies and our processes internally with the same guidelines so it is nothing new when they come into audit. It is a point about trying to figure out how to improve, not just to figure out who to hang up on the wall.

Ms. SMITH. Thank you.

Mr. CLINGER. Thank you very much. I would say that two pieces of legislation of which this committee, the Government Reform and Oversight Committee formerly the Government Operations Committee, can be most proud are, first, the Inspector General Act, which does provide a very vital function in almost every agency and department of government with the exception of the White House, which may be next. [Laughter.]

We would like to see an Inspector General there. The second is the Chief Financial Officers Act, which I think is also going to add a new dimension in terms of making government work better.

I have just a couple of questions. The Federal Government has been involved in economic development activities for a long, long time. There are a number of agencies. Many of them were New Society or Great Society agencies, the Economic Development Administration, Appalachian Regional Commission, Farmers Home, SBA and so forth. I guess this question will be addressed to Mr. Sommers, Mr. Carlson and Mr. Zimmerman who are familiar with these programs. Have they outlived their usefulness? Is there a role still for the Federal Government to play? Mr. Sommers, you indicated that in a rapidly changing society and with technology, people are looking more to the private sector to perform the same roles in effect that the Federal Government has played in the past. I have to say I have some mixed feelings on this issue. In a former life during the Ford administration, I was the general counsel for the Economic Development Administration, but I am also hearing a great deal of criticism. The criticism really arises this way: Once the Federal Government starts trying to pick winners and losers, they do not do it in a vacuum, and unfortunately politics too often enters into those decisions. So the result is, we too often have tended to support losers because the political urgency was there to prop up something that was going out and was going to lose jobs, and penalize winners. On the other hand, I have seen some very excellent projects sponsored by the Federal Government through those agencies. Just perhaps all three of you might like to comment.

Mr. SOMMERS. There is a number of agencies that have been out there and they are in different departments and it makes the coordination of the seamless service delivery problem very, very difficult. I think at least reconsidering what you are doing and whether you still ought to be doing it, but also looking for ways to combine those things. Maybe there should be some sort of block grant approach to a limited Federal economic development role. That, I guess, leads to the second point. There is an old aphorism that all economic development is local and you cannot make good decisions in a national capitol. You probably cannot make very good decisions in a State capitol either. You have really got to get it down a local level with involvement from the business people who are the real leaders in the economy anyway.

Mr. CLINGER. Mr. Carlson.

Mr. CARLSON. Can you imagine if the government tried to aid and assist the computer industry? [Laughter.]

Do you really think the government would put its money on a Harvard dropout from suburban Seattle? [Laughter.]

This same principle I think is at work with some of these development corporations, and that is, they tried to practice what in other countries is called industrial planning, economic planning, and it simply does not work. Government driven economic planning, whether it is substantial or whether it is even slight is always going to fail against the alternative which is the marketplace making these decisions. And if you talk to some people in rural Kentucky who were championing these programs 30 years ago when, of course, confidence in the Federal Government's ability to

do these things, as I opened up with a quote from LBJ on the war on poverty, was very high. You know, some very hard lessons have been learned about what works and what does not. And I would hope that political momentum would not keep these things alive because quite frankly if they had to rise and fall on merit and not by political pressure, I think many of these things would have been gone decades ago.

Mr. CLINGER. Anything else, Mr. Sommers?

Mr. SOMMERS. I cannot add anything of value to that.

Mr. CLINGER. OK. Thank you.

Any other questions?

[No response.]

Mr. CLINGER. Panelists, it has been fascinating. You did a terrific job and we thank all of you for very, very productive and useful testimony. Thank you all very, very much. [Applause.]

We are going to take a 5-minute break at this point, and I am going to try and hold it just to 5 minutes, and then we will go to what I am sure will be some of the more interesting comments that we will hear this morning and that will be our open mic. My understanding is that we are following a procedure that we have used in previous hearings of this sort, where we have had a lottery. We are going to draw the numbers out of the book here or out of the hat, and I think that is probably the fairest way to do this to ensure we get as many voices heard as we can. Obviously, we cannot hear from everybody in a 45-minute time span. Although at the end of the day we will have another one. So we will now break for just 5 minutes, please, and then we will get back and start again.

[Recess.]

Mr. CLINGER. The Committee on Government Reform and Oversight will resume sitting.

As an example that you cannot trust Washington, I said 5 minutes and it has been 15, so we will try and get back on schedule here. We now go into the open mic part of the program. We have found in previous hearings that we have held that this has been in many cases some of the most productive and interesting testimony that we have received. The way we are going to work this is, I think you all have received a number and we have the corresponding tickets in here. I will draw them out of the bag and then if you will come to the microphone right there in the middle of the floor. In order to cover as many people as we possibly can and get the comments of as many people as possible, please try to hold your comments or questions or whatever you would like to say to about 2 minutes if that is conceivable. We would really appreciate that in order that we can hear from as many people as possible.

So with that, I will reach into the bag and draw out—let me see, I think I only use the last three numbers and this would be 340.

[No response.]

Mr. CLINGER. 340.

[No response.]

Mr. CLINGER. Maybe if we were giving away the centerpiece or something we would get a faster reaction. [Laughter.]

340 is not here. OK, we will go to the next number 365. 365.

[No response.]

Mr. CLINGER. Maybe I should read more of the number. 9516365.

[No response.]

Mr. CLINGER. Apparently we have had a number of people who have left.

360.

[No response.]

Mr. TATE. Are you sure these are not rigged? Are these from New Jersey? [Laughter.]

Mr. CLINGER. They are rigged, yeah. Maybe these were left over from New Jersey. [Laughter.]

351. We have got a taker.

Mr. TATE. We have got a winner.

Mr. CLINGER. We have a winner. If you would, come to the microphone. Please give us your name and if you are representing a group or affiliated with a group that you want to speak on behalf of, tell us that.

STATEMENT OF TERRELL ALAN MINARCIN

Mr. MINARCIN. My name is Terrell Alan Minarcin. I am a member of the transition team for Washington's 10th largest city, 4th largest here in King County. We have heard many statements today about local government and how to improve the relationships between the Federal Government and local government. What I would like to express right now is my feelings at the Federal level. The first thing I think you should do is to repeal the Emergency Powers Act of 1933 and restore the Constitution. [Applause.]

We have also heard about privatization of Federal services. In this case, I think you should take away the privatization of our American currency and bring it back to the U.S. Government.

The third thing I think you should do is stick with the Constitution in its entirety. Make the laws to explain how to implement what is stated in the Constitution. And to that, I say, please take away before anything else the Overseas Private Investment Corp. so we do not have bailouts of private corporations, foreign banks, et cetera.

That leads to the fourth and final thing I would like to state which is that under the Constitution, no State official, a Governor, can make a treaty or pact with a foreign nation. And I feel that it is incumbent upon Congress to charge any person, any Governor in these 50 States with treason if they so do.

Thank you.

Mr. CLINGER. Thank you. [Applause.]

Obviously we have a number who agree with you on those issues.

This is 341. 341.

[No response.]

Mr. CLINGER. 341 going once.

[No response.]

Mr. CLINGER. Going twice.

[No response.]

Mr. CLINGER. Gone.

How about 352.

[No response.]

Mr. CLINGER. 352.

VOICE. Bingo.

Mr. CLINGER. Bingo. Great.

STATEMENT OF DON KASPER

Mr. KASPER. Just a brief comment about our children——

Mr. CLINGER. Would you give us your name?

Mr. KASPER. I am Don Kasper. I am running for a school board position here in Federal Way. I think that a lot of people here have lost sight of what we are all about in basic education, and I think that they make it sound like basic education is nothing more than basic. I think we need a good foundation for our kids and I think that we need to get the government—Goal 2000 is against the Constitution. That is all I want to say about it. [Applause.]

Mr. CLINGER. Any of our congressional panel who want to chime in at any time, please do.

Mr. TATE. Especially on Goals 2000, it was something that I opposed when I was in the legislature consistently. I think I was 1 of 12 in the House when it passed back in 1993 and have continued to oppose it. It comes down to those decisions should be made by parents and local school board members, not by the giant school board in the sky back in Washington, DC. And under our House proposal, we are downsizing, if not getting rid of all together Goals 2000. It is still being debated as part of the budget debate. And once again, as you have heard today, with money comes new regulations and giving up your local autonomy and making decisions regarding your kids education. We need to give more empowerment back to parents, and I can say that as Goal 2000 comes along, I would definitely oppose that as something I have heard very clearly from the voters in my district. [Applause.]

Mr. CLINGER. 342.

[No response.]

Mr. CLINGER. 342.

[No response.]

Mr. CLINGER. 342.

[No response.]

Mr. CLINGER. Maybe you will have better luck. You pick a few.

Mr. TATE. Now the pressure is on the local guy. The number I have got, the last three numbers are 377. 377.

Mr. CLINGER. Very good, we have one. Would you state your name and affiliation?

STATEMENT OF ANN BONNEY

Ms. BONNEY. My name is Ann Bonney and thank you for inviting me here. I will you tell you that you are scaring the crap out of the citizens of OPEC, NAFTA and GATT. That is the citizens of Japan and Canada and Mexico because the radio says that you are the worst government that was ever born, and you are going around the United States saying you are the worst government that was born and nobody should be under you. The citizens of Japan are saying—when we go out to dinner, they are saying, if you do not want to be under your Federal Government, why should we have dealings with your Federal Government? So they are having second thoughts about this OPEC, NAFTA and GATT.

No. 2 is, it is pork barreling. We are afraid of Newt's pork barreling. Boeing could build a better mouse trap for the Federal Govern-

ment and we could save like $5 billion and Newt's people may be able to build trains for this. So for trains and airplanes we could get the same money—we would spend the same money. So we should diversify Boeing into different projects because they have the brains and we should diversify Newt's people to build different things and put the money together so that we can build the infrastructure of the United States because the infrastructure of the United States has gone to hell in a handbasket.

Thank you.

Mr. CLINGER. Thank you very much. As I said, I serve on the Infrastructure and Transportation Committee and have for some years, and I think we have under-invested in our infrastructure for a long time. The Japanese on the other hand make a substantial investment in their infrastructure, much higher than we do. But I think you are seeing a change in that. We are seeing now a recognition that the ability of any area to have economic growth, economic prosperity depends on the quality of the infrastructure that it has. Ten years ago about 50 percent of the communities in this country were at capacity as far as their wastewater treatment systems were concerned. That is a total inhibition on ability to have any kind of economic growth. If you cannot add to the wastewater treatment systems you cannot have growth. So, I think there is a recognition that there is a real connection between the quality of the infrastructure and the ability to have growth.

Mr. TATE. The last three digits on the next ticket is 382, 382.

[No response.]

Mr. TATE. Time to let Congresswoman Smith try.

Mr. CLINGER. 382.

[No response.]

Mr. TATE. I will do one more if it does not work. The last three numbers, 366. 366.

[No response.]

Mr. TATE. It is your turn. [Laughter.]

Ms. SMITH. He wants to make sure it is my fault is what he wants. [Laughter.]

369.

[No response.]

Ms. SMITH. See, I am not doing much better than anybody else. 369. Hey the first time. It took a woman. [Laughter.]

STATEMENT OF RANDY ROBBINS

Mr. ROBBINS. My name is Randy Robbins. Some of the speakers you have here really frighten me because they said being homeless is a behavioral problem. Well, I am sorry to say I have been homeless myself once too. I lost a job when Hanford shut down and I took a job for minimum wage and unfortunately it did not pay the bills; it did not pay the mortgage. So I think we need to re-evaluate our thinking, everybody's, because cutting Medicare is not—and Medicaid is not going to help anybody if you have to move your parents back into your house because they cannot afford their bills. [Applause.]

Ms. SMITH. Mr. Chairman, I think I would respond to that because it looks like he has been reading some publications probably not accurate. Nobody is advocating cutting Medicare. The only pro-

posal that has ever passed anything is a 6.7 percent increase guaranteed for 7 years running, each year, every year taking the amount that we pay per year average for Medicare recipients from $4,800 to $6,700, going beyond the economic growth. We will grow about 5 percent a year. So it will grow at least 50 percent faster than that. So nobody is talking about cutting Medicare. There are some folks that are scaremongers that did not fix the system, had it for many years, were letting it fall apart and now they are saying we should not fix it even yet. They are wrong. The most irresponsible thing this Congress could do is back up from fixing the Medicare system and let it crumble as the trustees' report showed it will do in 6 years. I would adamantly oppose anybody that said we should not fix it. And you need to understand that if we do not fix these social programs, they are going to destroy the Nation and there will not be any money left for our grandchildren and our children with the debt.

I wish that I had a pie chart for you that I put together to show to some town halls in my area. Over the last few years our Nation has been stripping out infrastructure, downsizing military, downsizing necessary services and the social programs have taken over the budget except the part that is being taken over by interest on the national debt. If that continues, by the time my grandchildren—and I have six—are starting to work—they are little—will have an 82 percent tax rate. As Clinton said, we have to fix the structures. We cannot continue to spend the way we are.

Now, you just heard Linda Smith on her soapbox, but I am so sick and tired of what is going on in lying to our elderly about not fixing that system. You are going to hear people like me saying they are wrong; they are lying; we have to fix it. That is certainly not personally to you, sir. I think it is important that this word get out to America that we would be irresponsible if we do not fix these social programs so that they serve people instead of the government. [Applause.]

Mr. SCHIFF. Next number.

Ms. SMITH. 378. Hey, I said give it to a woman. [Laughter.]

STATEMENT OF MITCHELL MULARZ

Mr. MULARZ. My name is Mitchell Mularz and I belong to that small group of people who are skeptical about the Federal Government's ability to reform itself. [Laughter.]

With all of the brilliant organizational minds we have in the private sector, I favor recruiting a small army of a-dollar-a-year men and women to take over the reorganization of the Federal Government without political interference.

Thank you. [Applause.]

Mr. SCHIFF. Of course once you get to how to pick who the dollar-a-year men and women would be, I think you are into politics, I am not sure.

Next number.

Ms. SMITH. 381.

Mr. SCHIFF. 381.

[No response.]

Mr. TATE. We have 353.

Mr. SCHIFF. I think we have a winner.

Mr. TATE. All right.

STATEMENT OF ED PINA

Mr. PINA. Good afternoon, I am Ed Pina. I am vice president of High Line School, a school board which is a school district that contains Sea-Tac Airport.

Current Federal restrictions, DOT and FAA, over use of airport collected passenger and airline fees must be changed. Airports generate noise, pollution and facilitate the transfer of diseases. Unhealthy passengers pass through and pass these diseases on. Airports reduce the value of single-family homes and encourage the building of large apartments. Such changes have drastic impacts on school districts. We get a high transient population. In High Line School District—in our high schools, for example, over half the students have been with the district 5 or more years. I mean, that is a transient population.

Low income and single parents tend to move into apartments. I mean, they have to have homes, and I am not criticizing them. But because they are trying to struggle with making their daily life go on, they very often cannot help their children, so we get children who are not ready for school. Learning is difficult. There is a high correlation between those social/economic indicators and student performance. We must then rebalance our funds to provide extra funds to help those students get caught up and get ahead, particularly when it is a large population.

Airports—the Airport claims it cannot give us funds for addressing these problems and if we are willing to give away our rights for anything they do to us they will help us insulate our buildings.

Mr. SCHIFF. I am going to interrupt, not to be rude but to ask you for a clarification because I am not clear on how airports are inflicting all of this damage. Are you thinking of a specific example?

Mr. PINA. I am talking about Sea-Tac and the High Line School District, yes.

Mr. SCHIFF. All right.

Mr. PINA. The airport creates noise; the airport creates other pollution problems. The airport allows the spread of disease because of unhealthy people coming through. A combination of those things create a social/economic environment that a school district addressing them has to spend extra money to solve.

Mr. SCHIFF. When was the airport built?

Mr. PINA. This airport was—I do not know when it was first built. Its second runway came in the early 1970's.

Mr. SCHIFF. The second runway came in the early 1970's?

Mr. PINA. In the early 1970's. And there was going to be no third runway and that is now in serious contention.

Mr. SCHIFF. Does one of my colleagues want to respond?

Mr. TATE. Sure.

Mr. PINA. Well——

Mr. SCHIFF. I am sorry. I did not let you finish.

Mr. PINA. My comment is, we need to get the laws changed so that funds collected by airports can be used to assist the remediation efforts that have to be provided by organizations like school

districts that have to provide services to these people needing extra help.

Mr. SCHIFF. Mr. Tate.

Mr. TATE. Yes, I would just say I agree on that particular issue that there are impacts that need to be mitigated and that there are some that do not always show up that are easy to spot. I think you have highlighted them very well, the effects on the economics around your particular school district, High Line and others. So you have got someone who is committed locally to working with you in regards to the FAA and mitigating some of these problems, whether it be noise, whether it be environmental or, you know, traffic on the highways or whatever it happens to be in dealing with these issues.

Mr. PINA. Thank you.

Mr. TATE. You bet. Thanks for your comments.

The next number is 371.

STATEMENT OF RANDY MOON

Mr. MOON. My name is Randy Moon and I support everything that has happened in the change in Congress and all the downsizing of government and all the other aspects. I have heard Speaker Gingrich put $1 billion back into the Archer Daniel Midland's ethanol subsidies. I totally disagree that we should not take Medicare—and I agree with everything you are doing and I try and support that. In my area, usually I am more of a minority as far as my views in the area that I am from. But it kind of cuts our legs out from under us when this happens because here we are talking about downsizing and it just makes it very difficult to make our point. I know the House has addressed things and that is why I am really shocked that he has done this.

Ms. SMITH. First of all, let me—stay right there for a minute because from the moment——

VOICE. Your microphone is not on.

Ms. SMITH. Excuse me. It is not on?

Mr. TATE. I think you need it up closer.

Ms. SMITH. I have always been told to be quiet, not speak up. [Laughter.]

What you said is very serious. From the time I arrived in DC, it troubled me that there was any special interest money there, but I also was accused just because I was there of being one of them and that meant that if I voted a certain way it must be because one of them, special interest, gave me money. And the very dilemma of it led me to introduce a bill to abolish all special interest money so you do not have those discussions of did they get money from some group and that is why they moved the vote. I am not going to address that ethanol decision, but the very fact that you made the connection between money the papers did draws the question should we abolish all special interest money in Washington, DC, and why have we not done it. Now, I know that has put me—it has caused a little problem and made me be a little controversial recently. I proposed that. I do not want to have to have that question again ever in a forum as to whether or not my leader, myself or any of my colleagues, who I find to be mostly very honest, did something because of money and special interest money. So, I

would ask of you here, if I were to go back—and say I could be king for a day—and change the law that there is no money from anybody but people in your district, would you agree with me or feel that that was a bad law? Just raise your hand if you think that you would agree with me.

[Show of hands.]

Mr. TATE. I think that is overwhelming.

Ms. SMITH. Yes. It makes you wonder why Congress is missing that, does it not? I am disturbed by those articles too. Again, I am not going to address the particular—but it does undermine what we are trying to do. We are working very hard to balance the budget fairly.

Mr. MOON. And I appreciate that.

Ms. SMITH. Thank you.

Mr. SCHIFF. Do you want to do two more?

Mr. TATE. OK, we will do two more.

The next number is 375.

STATEMENT OF DEBORAH CARSON

Ms. CARSON. My name is Deborah Carson and I work for Group Health, although I am not representing them today. I am just here as a mom.

You have been here today and you have heard all the panelists and they have been talking about strengthening certain institutions and you have heard us applaud for the things that we agree with, so you are at least peripherally in touch with us. So you have some lofty and, quote, radical goals that you have set up to achieve and I was wondering how much power we really have through you in light of the administration's opposition and their tendency to circumvent the voting public by using the regulatory process and Executive orders to forward their agendas. [Applause.]

And also because we have been recently abdicating the sovereign authority of the United States to the U.N. and they are not subject to us in any way.

Mr. SCHIFF. Let me stop on that first point.

Ms. CARSON. Shall I sit down and listen? I was done.

Mr. SCHIFF. You may want to respond to what we say, so it will be another quick second here. On that first point, in this country even the President of the United States has to run for election. That is every 4 years, not every 2 years like those of us who are House members. That is a deliberate distinction made in the Constitution, just as the Senate gets 6 years. But the point is, next year the people of the United States, if they choose to do so, can choose a new President of the United States along with a new Congress if they want.

Anyone else want to—Dave?

Mr. MCINTOSH. Real quickly. In addition to that—which I think Mr. Schiff has made the most important point—you have a lot of power because ultimately you are our bosses and can renew our contract or not. But in the meantime, what are we going to do in the House of Representatives to make sure that some of the things that you have told us you want to see changed, we agree with you on, actually happen in the system back in Washington. One thing that I discovered this year is we could pass a lot of the bills in the

Contract With America, but either the Senate did not act on them or the President would threaten to veto them and hold them up that way. But there is a set of bills that are coming up this fall where the dynamic is reversed. Everybody in Washington says we have to pass these bills and it is quite frankly all the spending bills that allow the agencies and the President and the executive branch to spend your money, taxpayer funds. They cannot do that under the Constitution unless we in the House of Representatives go along with it and pass the spending bill. So, for example, we are going to attach the reform ending welfare for lobbyists to the spending bill that gives the President all the funds to fund his White House staff. [Applause.]

And we are looking for other creative ways where he has used the regulatory process or Executive orders to go around the will of Congress and say you cannot spend any money under these spending bills in order to enforce those regulations or Executive orders. So there are ways to get the job done and we are going to use some of those must-pass bills in the budget to actually make sure we get some changes this year and then, as Mr. Schiff pointed out, next year we can make even more fundamental changes. [Applause.]

Mr. SCHIFF. Thank you very much.

We are going to invite one more person to come up to the open mic. I just want to say, just so you know the schedule. I think you have it. We then have one more panel I will call up. And then, time remaining, we will again open the mic, but we will have to see what the time will be at that time.

Mr. TATE. The next number is 374.

[No response.]

Mr. TATE. Going once.

[No response.]

Mr. TATE. Let us try for another one. 322.

STATEMENT OF MEGAN WEICHERT, STUDENT, THOMAS JEFFERSON HIGH SCHOOL

Ms. WEICHERT. I am from T.J. and I am representing the paper. I was asked to ask this question. With all the downsizing the government is doing—and the government is like the main employer in the United States—how do you propose that we are going to get jobs if the body that employs us is suffering from so many cutbacks?

Mr. SCHIFF. Dave, I think that is made for you.

Mr. MCINTOSH. All right. And I think the answer was already provided us by someone else in the audience, the private sector. The way we would like to see this happen is by cutting back on the amount of spending that we do in Washington and also cutting back on the amount that we take of your money in taxation. We will allow more investment and more individual activity to create new jobs. Let me give you one specific number that I think is very important. The economists predict that when we reach a balanced budget—and I say when because I know this Congress is committed to doing that—we will lower interest rates by 2 percent and the economic stimulus that that creates because businesses can have more capital to invest in creating new jobs will lead to 4.5 million new jobs in the private sector. They will not be government jobs

in the bureaucracy, but they will be exciting and dynamic opportunities for people to either start their small business, participate in a big business that is growing, and I think will be a much better future for all of you who are now in school preparing for that.

Mr. SCHIFF. Anyone want to add anything? [Applause.]

Before calling up panel three, let me make just one final comment on that very quickly and say there is still another issue. The issue is—I will tell you that I have not agreed with every spending decision made by every committee in the Congress even though I am with the majority in the House of Representatives. But I am totally committed to the idea that we have to reach a balanced budget and there are two reasons. The first reason is the moral reason, that the young people the age of that student who talked to us are going to have to pay off that debt some day that they did not earn. They did not run up, and that is not fair. That is taxation without representation, I think.

Second of all, it is not just a future issue. Out of our budget today, right now, real time, we spend approximately for this fiscal year $235 billion on interest on the national debt. One of the things I learned when I got to Congress was the Federal budget is in some respects no more complicated than a business or a household budget. Add some more zeroes at the end. But if you want to borrow money, you have to pay interest to borrow the money, and if the next year you do not pay that back but you borrow more, then you have to pay interest on what you borrowed times year plus what you borrowed last year. We have been doing this for 25 consecutive years. The interest on the national debt is the third highest line item spending in the Federal Government after—but not by much—the military and social security. If we had not borrowed all this money, we would have that $235 billion that you taxpayers have already sent us to use on whatever program we wanted to use, whether it is Medicare or whether it is defense, whether it is education, and it would not cost you a dime and it would not mean a reduction in any other program. We cannot do that because we are choking on the interest we have to pay every year. Therefore, when you write in the paper about jobs, imagine the jobs we could produce by the use of that $235 billion if we just write a check for interest and it goes out the window.

With that, I would like to call up panel three and invite the panel three members to join us up here. They are Jack Larsen who is vice president of energy and environment at Weyerhaeuser, Inc., who was appointed director of Washington State's Department of Commerce and Economic Development by Governor Daniel Evans in 1974. And he has been with the Weyerhaeuser Co. since 1969, where he has held a number of distinguished positions.

Gwen Fraser is CEO of Fraser, Inc., and has been closely involved with the maritime industry since 1982, and founded the Maritime Alliance of the Pacific Northwest organized to create a unified force in revitalizing the maritime industry.

Lawrence Riggs is president of the Services Group of America. He has an impressive record with his involvement in the reorganization issues following Services Group of America's purchase of Pacific, Gamble, Robinson in 1986, and creation of Food Services of America in 1987.

And Paul TeGantvoort, owner of Seattle Automotive Distributing. He opened his first company branch in 1989, and by the end of this year will have three branches open.

I would like to welcome you all. I would like to say that without objection, if you provided written statements they will be made part of this record, and I would invite you to try to give a summary of your statement in about 5 minutes. We will not hold you to that, as you have already heard the chairman say.

Mr. Larsen, may we begin with you.

STATEMENTS OF JACK LARSEN, VICE PRESIDENT OF ENERGY AND ENVIRONMENT, WEYERHAEUSER CO.; GWEN FRASER, CEO AND OWNER, FRASER, INC.; LAWRENCE RIGGS, PRESIDENT, SERVICES GROUP OF AMERICA; AND PAUL TEGANTVOORT, OWNER, SEATTLE AUTOMOTIVE DISTRIBUTING

Mr. LARSEN. Mr. Chairman, members of the committee, thank you very much for the kind invitation to testify before your committee on what will be a complex and arduous task. We at Weyerhaeuser being the size that we are, interacting with a number of Federal agencies every day and because we are directly affected by such a broad number of these agencies, we are especially pleased to have an opportunity to speak with you.

Today, I would like to comment and communicate to the committee specifically around three areas. First of all, our endorsement of this committee's efforts to constructively examine and downsize the Federal Government. Second, our support for the use of risk assessment and cost benefit approaches as you look at the regulatory process itself. Third, I would like to draw the attention of the committee to an effort within the Environmental Protection Agency, named Project XL, which I think you might find to be the kind of success story you are attempting to look for in your efforts.

I am going to confine my oral testimony to just a few comments on your examination of downsizing and reorganizing Federal agencies and to Project XL. We at Weyerhaeuser recognize that Federal agencies play an essential and very critical role in public policy formulation and implementation. We do not under-estimate the difficulty of the tasks that they face each day. Agencies, in large measure, provide for us decisions around what laws really mean. In many respects the kinds of decisions that they make are as critical to us as the votes that you make on Capitol Hill.

As indicated, I have worked in government, so I have been a part of those who have regulated and I am a member of a regulated body. I have enormous respect for the agency people who shoulder these responsibilities.

Having said that, it is essential for an entity, such as this committee, to undertake the kind of assessment that you are. The task, as I have indicated is going to be——

Mr. SCHIFF. I have to interrupt you. I do not mean to be rude, Mr. Larsen, but I neglected a very important part of our procedures here. The Government Reform and Oversight Committee among other things is an investigative committee and there are times—although that is not what we are doing here today as such, there are times that we are looking for what could be considered testimony

in terms of some objective as far as investigating what the government is doing. The point is, for that reason, we make it a practice to swear in each of the witnesses so that no witness is singled out, well, this one was sworn in and this one was not. So I am going to ask all of the panel members if they will stand for a moment and raise their right hands.

[Witnesses sworn.]

Mr. SCHIFF. I am sorry for having to interrupt to do that. Please continue.

Mr. LARSEN. That is quite all right.

Mr. SCHIFF. And I assume that oath will apply retroactively to what you have said already.

Mr. LARSEN. Yes, indeed.

As I indicated, we understand the enormity of the task that these agencies are faced with. But the process of assessment that you are undertaking is a very important one. This kind of assessment process is much like the kind of assessments that we in the private sector have to perform as a normal part of our management activities.

For example, in 1990 and 1991, Weyerhaeuser Co. went through a very difficult and challenging effort to refocus our operations with the goal of trying to increase operating earnings by some $700 million. It meant looking at the divisions of our company, what in fact we were trying to do, as well as how well we were performing and achieving that vision. We evaluated where we were strong; where we were weak; where we needed to improve and where we needed to stop doing some of the things we were doing. The task was not an easy one. It led to our no longer being in some of the business lines and in some of the products that we had previously been in. But within a 3-year period—a target that we had set for ourselves—we achieved our $700 million goal. Thus, it is with wholehearted support that our company supports the efforts of this committee.

We do believe it is very important, however, to understand that many of your constituents, including Weyerhaeuser, are not seeking to have government completely abandon their environmental responsibilities. We are seeking to have government take a critical look at the processes of government and determine if there are ways to remove the non-value added activity and processes and replace them where you can with value added processes.

In this new state, if government is going to behave differently, it is going to require all of us, policymakers, regulators, those of us in the private sector to operate differently and to behave differently. The reasons are simple. Federal agencies do not operate in a vacuum. They must have frequent interaction not only with the Congress but with the business community. Congress relies on these agencies many times to provide information to them in complex situations where they just do not have that information available to them as they are considering new laws. Similarly, these agencies depend on the private sector for a lot of information that is just not available to them. We are going to have to make that process work more efficiently and work in a much more trusting kind of relationship.

A model for this kind of approach is worthy for this committee's attention and it is the specific example that I discussed, Project XL. In March of last year, President Clinton announced an effort to reinvent environmental regulation and among his proposals was a project called Project XL which stands for excellence and leadership. The Federal agency notice announcing Project XL succinctly described it as an effort to test alternative strategies to achieve environmental goals. Companies, State governments and individual facilities are given, under Project XL, the opportunity to submit applications for demonstration projects that will achieve superior environmental performance, performance beyond what they are mandated under existing standards and regulation, in exchange for more regulatory flexibility.

In establishing the program, the EPA has established eight criteria on which to judge these projects. The first is they truly must achieve superior environmental results. Second, it must result in cost savings and paperwork reduction. Third, it must have committed stakeholder support. Fourth, it must encourage innovation and multi-media approaches. Fifth, it must be transferable. Sixth, it must be feasible. Seventh, it must incorporate into it monitoring, reporting and evaluation to ensure it is working. And eighth and finally, it should not shift any risk burden to a less advantaged population.

It is readily apparent that Project XL has many of the characteristics that I think this committee is looking for. It seeks to maximize return on taxpayers dollars by reducing the regulatory burden. It pays dividends in the private sector by granting regulatory flexibility. It meets the public desire for stronger environmental protection and it builds upon a strong relationship between the regulated community and regulators.

Mr. Chairman, initiatives such as Project XL, I believe, provide very helpful models to us for examining how we can have the private sector and government work more effectively together for the common good. And as your committee and as the Congress examines ways for government to function more efficiently, I hope the philosophy and the spirit behind Project XL can be transferred into your looks at these agency efforts.

Thank you for the opportunity to testify.

[The prepared statement of Mr. Larsen follows:]

John S. Larsen

Vice President, Energy and Environment

Weyerhaeuser Company

Mr. Chairman and members of the Committee, my name is Jack Larsen. I am Vice President for Energy and Environment for Weyerhaeuser Company, one of the world's leading forest products companies. My company's operations bring us into contact with government agencies at all levels - federal, state and local.

Because we are directly affected by a broad array of federal government agencies and their policies, I appreciate the opportunity to testify this morning, and to share with this committee our perspective on federal government reorganization.

Specifically I wish to communicate: (1) our endorsement of this Committee's efforts to constructively examine opportunities to downsize and reorganize the Federal Government, (2) our support for risk assessment and cost / benefit approaches in Federal regulations, and (3) to draw this committee's attention to an effort within the Environmental Protection Agency - Project XL - which you may find to be the kind of "success story" that will be useful.

I will confine the rest of my remarks to: (1) your examination of downsizing and reorganization of Federal Agencies and (2) Project XL.

Federal agencies play an essential and critical role in public policy formulation and implementation. We at Weyerhaeuser Company do not underestimate the difficulty of the task they face. Day to day, agency personnel decide in large measure what particular provisions of law really mean to us. Their decisions are as crucial as the votes cast on Capital Hill. As someone who has worked in both the public and private sectors, who has been a regulator and a member of the regulated community, I have enormous respect for the agency people who shoulder these responsibilities.

Assessing and implementing improvement opportunities for Federal agencies will be arduous and complex. But your task is similar to the assessments that companies such as Weyerhaeuser Company must perform as a normal part of our management activity, if we are to remain competitive.

For example, in 1990 and 1991, Weyerhaeuser Company went through a difficult and challenging effort to re-focus our operations to increase company operating earnings by $700 million. It meant looking at our vision for the company and how well we were performing in achieving that vision. We evaluated where we were strong, where we were weak, where we needed to improve and where we needed to stop doing some of the things we were doing. The task was not easy. It led to our no longer being in some businesses and products. But, within the three year target - that we set for ourselves - we achieved the $700 million improvement goal.

Thus, we wholeheartedly support this committee's and other efforts to assess how we can improve our Federal government. But in doing so, we believe it is important to note that

many of your constituents, including Weyerhaeuser Company, are not seeking to have government abandon their environmental responsibilities. Rather, we are seeking to have government take a critical look at the processes of these agencies and determine if there are ways to make them more efficient by taking out non-value added activity and replacing it with value added processes.

If government is to behave differently, it will require that all of us - policy makers, regulators and members of the regulated community - approach issues in new ways. The reasons are simple. Federal agencies do not operate in a vacuum. They must have frequent interaction not only with the Congress but with the business community. Congress relies upon executive branch agencies for advice and guidance in writing new laws because that is where a great deal of the expertise resides. Similarly, agencies frequently must look to the regulated community for information that they cannot obtain elsewhere inorder to assure that regulatory approaches and standards are based on the best available factual information.

If agencies are faced with doing more with less, we are going to have to strengthen our relationships in an open, constructive manner. The business community will need to increase its interaction with agencies. Congress will need to work cooperatively with executive branch personnel. And, agencies will have to look at the regulated community with less suspicion.

Models for such approaches are being developed and worthy of your attention. A specific example is "Project XL".

In March of this year, President Clinton announced an effort to "reinvent" environmental regulation. Among the proposals in the president's program was Project XL, which stands for "excellence and leadership." The federal register notice announcing Project XL succinctly described it as an effort "to test alternative strategies to achieve environmental goals."

Companies, state governments and individual facilities are given the opportunity under Project XL to submit applications for demonstration projects that will achieve superior environmental performance, in exchange for which they will receive regulatory flexibility. EPA has established eight criteria on which they will judge projects:

1. Achieves superior environmental results
2. Results in cost savings and paperwork reduction
3. Has committed stakeholder support
4. Encourages innovation and multi-media approaches
5. Will be transferable
6. Is feasible
7. Incorporates monitoring, reporting and evaluation
8. Does not shift the risk burden to less advantaged populations

It is readily apparent that Project XL has many of the elements I spoke of earlier, it:

- seeks to maximize return on taxpayers dollars by reducing the regulatory burden
- pays dividends in the private sector by granting regulatory flexibility
- meets the public's desire for strong environmental protection
- builds upon strong relationships between the regulated community and regulators

Mr. Chairman, initiatives such as Project XL provide helpful models for us to examine, as we seek to have government and the private sector work more effectively together for the common good. As your committee and the Congress examine ways to make government function more efficiently, I hope the philosophy and spirit behind Project XL can be transferred to other agency efforts.

Thank you again for the opportunity to offer this testimony. I will be pleased to answer any questions the committee might have.

Mr. CLINGER. Thank you very much, Mr. Larsen.

Ms. Fraser.

Ms. FRASER. Thank you very much for inviting me to be here. We are happy to have you in our State.

We were asked to tell success stories and in my opinion, the real success story for the American people is what this new Congress is doing and the fact that you are here asking us to be part of that process is a real celebration. In Washington, we are especially proud of the likes of Randy and Linda. So, we would like to see more of this.

The wisdom of the American voter put you in this process and we as the American public, and particularly in business, need to stay involved in this process to see it all the way through. I am happy that you have provided this for us.

I am an industrialist in the maritime industry, and the way that I know I am successful is that I have succeeded to staying alive during the last decade in spite of taxes, over-regulation, paper redundancy, a shrinking market, and all the like. But we have made it and our company has dedicated itself to helping to see that others might succeed as well.

I got involved in the idea of ecolonomics when I met with Dennis Weaver. Most of you know him as Sam McCloud or Chester, but I know him better as the father of ecolonomics. It is the concept of creating the industry that cleans the environment for profit and sharing that.

In a way of enhancing our business, we began to look for products and processes that would help our customer base, who are the polluters, to stay in business by helping them lessen the impact of their operations on the environment. In doing that, we have learned that the whole concept of ecolonomics brings an exciting opportunity, especially for young people, to get involved at the base of creating this industry that cleans the environment for profit. So it might be a good answer to the young woman who asked where will these jobs come from. It will come from our making a commitment to really getting some of this work done. I think that many of us agree that we are tired of hearing how did this happen; why did it happen; what could we do; what should we do. We need to do it. We just simply need to do it.

Our firm has joined together with a small Rotary Club, the Washington Institute for Policy Study—John Carlson commented earlier—and Cleveland High School. We have developed the Business Development Academy. We were not successful in becoming an accredited school, and maybe I think I am happy about that. But what we did was bring together people who cared about these young people, who knew that this was a good process to start in. I actually donated my office building for a time and we went to work—and just working with young people over the summer—to show them how to own and operate a business. Those students came every day, ended up making very little money, but did learn that they were valued by those of us working with them, but more importantly by themselves. Those students developed a T-shirt sales company. They designed the shirt and sold it. And we are now in the process of getting a curriculum developed in ecolonomics at the high school level. We have proposed two projects. If you do

not know what to do with those block grants until you know if the States are capable of handling them, we will take a couple of them. [Laughter.]

One project would be managed by Dr. Peter Jenkins who is the Dean of Engineering and Applied Sciences at the University of Colorado at Denver. He has a masters program in ecolonomics. He has a very strong ecolonomic advisory board made up of most of the engineering firms and environmental firms in his area. We want to put together the opportunity of creating a real live laboratory at a gold mill facility in the mountains of Colorado to prove that by bringing technology together with cooperation we can eliminate the need for a tailings pond which is the difficult part of a milling operation. The part that wiggles in and out of compliance. We have located a sophisticated water treatment system that would enable the processed water to be recirculated and an innovative process for making an alternative building brick that would use the rest of the material. So literally the mill would become a non—a non-point——

Mr. CLINGER. Source.

Ms. FRASER. Source, yes.

Our second project is a little closer to home. It involves a technology that was developed at Battelle Laboratories Northwest in Richland, WA, and it is the process of glassifying or vitrifying hazardous waste. Initially, it was developed for high level nuclear waste. But vitrification can be used for anything, municipal waste streams, chemical products, flyash. We would like, through our high school students and their study of ecolonomics, to identify a small part of a Superfund site and get on with the project of cleaning this. You can literally take the contaminated soil and develop a saleable product, and we are convinced you can do it with high school students, with your help, your block grant.

This is an excellent technology for many things. But Superfund site is the big glaring example that we have. How many more billions to study it how much longer and it is not getting any cleaner. It is a wonderful opportunity for enterprising Americans of any age, but certainly for young people. They can see a new emerging industry that would encourage them to increase their scholastic ability. We will get some chemical engineers out of this interest level in this area.

I know that I can speak for thousands of small business owners that really stand ready to help you help us. We can get it done. We do not get in our way, we cannot afford to. So call on us. Tap into our willingness. We can make a difference together.

Thank you.

[The prepared statement of Ms. Fraser follows:]

TESTIMONY FOR GWEN FRASER
COMMITTEE ON GOVERNMENT REFORM AND OVERSIGHT
THOMAS JEFFERSON HIGH SCHOOL
AUBURN, WASHINGTON
OCTOBER 6, 1995

MR. CHAIRMAN, MEMBERS OF THE COMMITTEE, THANK YOU FOR THE OPPORTUNITY TO SPEAK TO YOU TODAY.

IN COMPLYING WITH YOUR EFFORTS TO HEAR ABOUT 'SUCCESS STORIES' FROM THE PRIVATE SECTOR, LET ME STATE THAT THE GREATEST SUCCESS STORY THAT I CAN POINT TO IS THE FACT THAT THE NEW CONGRESS OF THE UNITED STATES OF AMERICA IS SEEKING THE INPUT FROM BUSINESS AND PRIVATE INDIVIDUALS AS THEY RESHAPE THE GOVERNMENT OF THIS GREAT LAND.

THE WISDOM OF THE AMERICAN VOTER BEGAN THE PROCESS OF SUCCESSFULLY TAILORING OUR GOVERNMENT TO MORE ACCURATELY REFLECT THE GOALS AND VALUES OF THE CITIZENS OF THIS COUNTRY. WE AMERICANS MUST NOW STAY INVOLVED IN THIS PROCESS OF DEVELOPING SYSTEMS AND OPPORTUNITIES TO CONTINUE THE ECONOMIES AND EQUALITIES OF THIS GOVERNMENT OF THE PEOPLE FOR THE PEOPLE AND BY THE PEOPLE. THANK YOU FOR PROVIDING THE PROCESS FOR US TO DO THAT.

I AM AN INDUSTRIALIST, AND I KNOW I HAVE BEEN SUCCESSFUL BECAUSE I HAVE SURVIVED THE LAST DECADE! THE BURDEN OF TAXES, OVER-REGULATION, AND PAPERWORK REDUNDANCY HAVE PUT MANY OTHER SMALL BUSINESSES OUT OF BUSINESS. WE'VE MADE IT, AND WANT TO BE PRO-ACTIVE IN THE PROCESS YOU HAVE PUT FORTH TO HELP OTHERS MAKE IT AS WELL.

I'D LIKE TO FOCUS ON THE ENVIRONMENT AS MY SUGGESTION FOR GETTING ON WITH SOLUTIONS, AND GETTING OFF OF STUDYING AND PAYING GOOD MONEY FOR BAD PERFORMANCE. I WAS INTRODUCED TO THE CONCEPT OF 'ECOLONOMICS' BY DENNIS WEAVER. DENNIS FORMED THE INSTITUTE OF ECOLONOMICS TO PROMOTE THE PROCESS OF CLEANING THE ENVIRONMENT FOR PROFIT; BY UTILIZING COOPERATION AND TECHNOLOGY. (A COPY OF 'ECOLONOMICS IN ACTION' IS ATTACHED TO THIS TESTIMONY.)

THOUGH THE PRIMARY ACTIVITY IN OUR BUSINESS IS THE SALES OF PARTS AND SERVICE IN THE REPAIR OF BOILERS AND DIESEL ENGINES IN SHIPS, FACTORIES, AND UTILITIES, WE HAVE BECOME INVOLVED IN THE SEARCH FOR PRODUCTS AND SERVICES TO PROMOTE AND PROVIDE TO OUR CUSTOMERS THAT WILL HELP THEM IMPROVE THE POTENTIAL ENVIRONMENTAL IMPACT AS THE OPERATE. THIS HAS PROVEN TO BE A POTENTIAL REVENUE STREAM FOR OUR FIRM, AND A RELIABLE SOURCE OF MATERIALS FROM A TRUSTED VENDOR.

THE OPPORTUNITY FOR DEVELOPING STABLE BUSINESS BY CLEANING THE ENVIRONMENT IS AN EXCITING ONE FOR YOUNG PEOPLE. TO THAT END, OUR FIRM HAS JOINED WITH SEATTLE INDUSTRIAL ROTARY

CLUB, AND WASHINGTON INSTITUTE FOR POLICY STUDY -OUR AREA'S ADVOCATE FOR THE FREE ENTERPRISE SYSTEM- AND CLEVELAND HIGH SCHOOL, IN ESTABLISHING THE BUSINESS DEVELOPMENT ACADEMY TO SERVE HIGH SCHOOL STUDENTS, MANY OF WHICH AT 'AT-RISK'. WE PLAN TO OFFER A CURRICULUM IN ECOLONOMICS, AND SHARE IN THE MARKETING OF SEVERAL PRODUCTS THROUGH SUB-DEALERSHIPS WITH OUR STUDENTS TO HELP THEM DEVELOP INDEPENDENT BUSINESSES OF THEIR OWN. IN OUR INTERNATIONAL TRADE CURRICULUM, THE STUDENTS WILL LEARN TO MARKET ON THE GLOBAL INTER-NET.

OUR FIRM, AND OUR ACADEMY IS INTERESTED IN PARTNERING WITH OUR GOVERNMENT IN DEVELOPING TWO PROJECTS TO PROVE THE VALUE OF ECOLONOMICS IN BOTH IMPROVING THE ENVIRONMENT AND THE ECONOMIC OPPORTUNITIES FOR ENTREPRENEURS OF ALL AGES.

ONE OF OUR PROPOSED PROJECTS WOULD BE UNDER THE DIRECTION OF DR. PETER JENKINS, DEAN OF ENGINEERING AND APPLIED SCIENCES AT THE UNIVERSITY OF COLORADO AT DENVER. OUR PROJECT WOULD DEVELOP THE USE OF TWO NEW TECHNOLOGIES TO POTENTIALLY ELIMINATE THE NEED FOR A TAILINGS POND AT A COLORADO GOLD MILL FACILITY. SIMPLY, WE WOULD INCORPORATE THE USE OF A SOPHISTICATED WATER TREATMENT PROCESS, AND THE TECHNOLOGY FOR CREATING AN ALTERNATIVE BUILDING BRICK, TO PROVIDE FOR RE-CIRCULATING THE MILL PROCESS WATER, AND USING THE WASTE MATERIAL TO CREATE A NEW PRODUCT AND ADDITIONAL REVENUE STREAM. THE IMPACT ON THE MINING INDUSTRY COULD BE VERY DRAMATIC. DR. JENKINS HAS FORMED AN ECOLONOMICS ADVISORY BOARD THAT REPRESENTS MANY OF THE PRIMARY PLAYER IN THE FIELD OF ENGINEERING, THIS OPPORTUNITY TO INVEST IN A SOLUTION OF THIS TYPE SHOULD BE VERY EXCITING TO YOUR COMMITTEE.

THE SECOND PROJECT INVOLVES THE USE OF A TECHNOLOGY DEVELOPED AT BATTELLE NORTHWEST LABORATORY IN RICHLAND, USING GLASS MELTING FURNACES TO GLASSIFY, (VITRIFY) WASTE. THE METHODS WERE ORIGINALLY INTENDED TO TURN HIGH-LEVEL RADIOACTIVE WASTES INTO GLASS, WHICH CAN THEN BE STORED WITHOUT DANGER OF RADIOACTIVE MATERIALS LEACHING INTO THE GROUNDWATER.

HOWEVER, VITRIFICATION CAN BE USED ON MANY OTHER WASTE STREAMS, SUCH AS MUNICIPAL SOLID WASTE, INCINERATOR ASH, AND CHEMICALLY HAZARDOUS WASTES, WITH THE SAME BENEFICIAL RESULT, NON-LEACHING GLASS THAT CAN BE TURNED INTO USEFUL PRODUCTS LIKE GARDEN TILES, PAVING BRICK FILLER FOR ASPHALT ROAD BEDS AND GLASS WOOL FOR INSULATION.

THIS WOULD BE AN EXCELLENT TECHNOLOGY FOR SUPERFUND SITES, A PORTABLE OR SEMIPERMANENT MELTER COULD BE USED TO RENDER CONTAMINATED SOIL COMPLETELY SAFE, AND TURN IT INTO SALABLE PRODUCTS. WE NEED A SITE TO PROVE THAT THIS CAN BE DONE, AGAIN, AN EXCITING OPPORTUNITY FOR YOUR COMMITTEE TO TAKE A GIANT STEP FORWARD IN SUPERFUND CLEAN-UP AND PROVIDING CAREER PATH OPPORTUNITIES TO STUDENTS.

BOTH PROJECTS OFFER UNPRECEDENTED OPPORTUNITIES TO 'MAKE A

Mr. CLINGER. Thank you very much, Ms. Fraser. We appreciate your testimony.

Now, we will ask Mr. Riggs, if he would commence.

Mr. RIGGS. Thank you for the opportunity to appear before this committee. I am president of Services Group of America. SGA is the largest privately owned company in the State of Washington and one of the largest in the Nation. Our operations include food service distribution and insurance.

VOICE. Get closer to the microphone.

Mr. CLINGER. Sir, tilt it down a little bit.

Mr. RIGGS. You bet. It is easier said than done. There we go. Is that better?

I am here today to emphasize that at SGA we strongly support your efforts to reduce the size of Federal Government. Our experience proves that you can reduce the size while increasing efficiency and productivity.

The key to success here is focus. You need to decide where government can provide real value and focus on those areas. Where government fails to produce results that justify their cost, it should end the activity.

There are two main reasons why we believe so strongly that government can and must reduce its size. The first is that the Nation's future depends on reducing the Federal deficit.

Privately held companies such as SGA create many of the Nation's new jobs every year. Because we are privately held, we have only two sources of capital to invest in our growth. One is the reinvestment of our earnings and the other is capital that we borrow.

When the Federal Government raises taxes to finance spending, it reduces our ability to reinvest earnings. It does not take a large tax increase to cause a significant reduction. When the Federal Government borrows money to finance the deficit, it competes with us for capital. This reduces our ability to borrow and raises our borrowing costs.

I emphasize capital investment and job creation because that is the primary emphasis at SGA. In the past 6 years, we have invested well in excess of $100 million in new facilities and technology. We also invest in our associates, who are our real competitive edge. President Clinton once proposed that corporations should allocate 1½ percent of their annual payrolls for training, and we have exceeded that percentage for years with no government mandate.

At SGA, we are investing in our future growth. The more capital we have available through earnings or borrowing, the more we are able to make similar investments that lead to growth and to jobs.

There is a second reason why we encourage you to reduce the size of Federal Government and to make it more efficient; and that is because we know you can. It takes focus and it takes hard work, years of it. We know because we have been there.

SGA dealt with extensive efficiency issues when we acquired a company called Pacific Gamble Robinson back in 1986 and created what is now Food Services of America in 1987. To succeed, we had to decide where we could deliver better value to our customers than our competitors. We evaluated all of our businesses and sold or shut down the ones where we could not deliver that value. Those

decisions were hard. We had to stay disciplined and focused. The business operations that we have divested since 1986, if taken as a single company, would rank among the five largest privately held companies in the State of Washington.

In the short term, becoming more efficient forced our company and our people through very tough changes. In the long term, our refocused efficiency made today's success possible. Let me give you a couple of examples of how we did it.

One was a company called Tradewell, which is a retail grocery operation which we acquired when we purchased Pacific Gamble Robinson. It took us a couple of years, but we realized that we were not very good at retail grocery. It did not fit with the food service distribution, which was the backbone of our food operations. Finally we sold Tradewell and concentrated on food service distribution.

The second example is a company called Amerifresh, which is our fresh produce operation. When we acquired the company, it was in packing, shipping and brokerage and it was losing money badly trying to be too many things to too many people. We eventually sold packing, closed shipping. Today Amerifresh is healthy and growing.

In the end, our hard work and long-term commitment have paid off. Our company is strong and productive. Our customers are better served. We have been able to preserve many existing jobs and create new ones. We do not waste money on things that we do not do well.

Across the Nation, SGA and other American companies have shown how to streamline operations and increase efficiency and productivity. With their votes in 1994, the American people have shown that they want their government to do the same. Now our government must show the hard work and the commitment to get the job done.

Thank you.

[The prepared statement of Mr. Riggs follows:]

Services Group
of America

Lawrence A. Riggs
President, Services Group of America
Testimony for House Government Operations Committee
Oct. 6, 1995

Thank you for the opportunity to appear before this committee today. I'm Larry Riggs, President of Services Group of America. SGA is the largest privately owned company in Washington state, and one of the largest in the nation. Our operations include foodservice distribution, produce brokerage, international food trading, and insurance. We do most of our business in the Western United States.

I am here today to emphasize that at SGA, we strongly support your efforts to reduce the size of the federal government. Our own experience, and the experience of many other American companies, prove you can reduce size while increasing efficiency and productivity.

The key to success here is focus. You need to decide what government is good at -- where it can provide real value -- and focus on those areas. Where government is doing something poorly or its original purpose is no longer valid, it should get out. Don't use our tax money to finance inefficient, misguided operations.

There are two main reasons why we believe so strongly that government can and must reduce its size. The first is that the nation's future depends on reducing the federal deficit.

Privately owned companies such as SGA create many of the nation's new jobs every year. Because we are privately owned, we have only two sources of capital to invest in our growth. One is the reinvestment of our earnings. The other is capital we can borrow.

4025 Delridge Way SW #500
Seattle WA 98106
(206) 933-5225
Fax: (206) 933-5247

PO Box 3627
Seattle, WA 98124

When the federal government raises taxes to finance spending, it reduces our ability to reinvest earnings. It doesn't take a large tax increase to make a significant reduction in the earnings available for reinvestment.

When the federal government borrows money to finance the deficit, it competes with us for capital. This reduces our ability to borrow and raises our borrowing costs. The federal government currently is the largest debtor in the world. Every dollar our government borrows is a dollar private industry cannot invest in the growth that creates new jobs.

I am emphasizing capital investment and job creation because that is a primary emphasis at SGA. In the past six years we have invested well in excess of a hundred million dollars in new facilities and technology. We built new foodservice distribution centers in California, Nebraska, North Dakota and Idaho, and we are building another in Alaska. We expanded five other distribution centers and purchased two additional existing facilities.

We invested in our Associates, who are our real competitive edge. We built outstanding corporate training facilities, where hundreds of our Associates take courses every year. President Clinton once proposed that corporations should allocate 1-1/2 percent of their annual payrolls for training. We have exceeded that percentage for years with no government mandate.

We could have simply kept our earnings. Instead, we invested them in our future growth. The more capital we have available, whether through earnings or borrowing, the more able we are to make similar investments that lead to growth and jobs.

There's a second reason why we encourage you to stay the course in your effort to reduce the

federal government's size and make it more efficient. That is because we know you can succeed. It takes focus and hard work -- years of it. We know because we've been there.

SGA successfully dealt with extensive efficiency issues after we acquired Pacific Gamble Robinson in 1986 and created Food Services of America in 1987. To be able to invest more than a hundred million dollars in our future productivity -- and to succeed -- we had to concentrate on what we could do best. We had to decide where we could deliver better value to customers than our competitors. We evaluated all of our business operations and sold or shut down the ones where we couldn't deliver that value.

Those decisions were hard. We had to stay disciplined and focused. The business operations we have divested since 1986, if taken as a single company, would rank among the five largest privately held companies in Washington state. In the short term, becoming more efficient forced our company and people through tough changes.

In the long term, our refocused efficiency made us the success we are today. Let me give you two specific examples of how we did it. One was the Tradewell retail grocery chain, which we acquired in the Pacific Gamble Robinson purchase. It took us a couple of years, but we realized that we weren't good at retail grocery, and it didn't fit with foodservice distribution, the backbone of our food operations. We sold Tradewell and concentrated on foodservice distribution.

The second example is Amerifresh, our fresh produce operation. When we bought the company, it had operations in packing, shipping, and brokerage. The company was losing money badly, trying to be too many things to too many people. We eventually sold the packing and closed the shipping operations. Today Amerifresh is healthy and growing.

In the end, our hard work and long-term commitment have paid off. Our company is strong and productive. Our marketplaces are better served. We have been able to preserve many existing jobs and create new ones. We don't waste our money on things we don't do well.

Across the nation, SGA and other American companies have shown how to streamline operations and increase efficiency and productivity. With their votes in 1994, the American people have shown they want government to do the same. Now American government must show the hard work and commitment to get the job done.

###

Mr. CLINGER. Thank you very, very much. Mr. Schiff and I were just commenting about your comment that you do not waste money on doing things that you cannot do well. I think we should certainly mind that advice very much.

Mr. TeGantvoort.

Mr. TEGANTVOORT. I too would like to thank you for inviting me to this panel and the Congressmen for taking the time to listen to what our complaints or grievances or comments are in regard to the Federal Government.

Some of the things that have been said I agree with wholeheartedly, especially some of the capital things we have talked about, how we create a business and how we get started and how we get going. Our business is not comparable to the other three people here, we are a very small company, we sell auto parts at a distributor level to parts stores, to installers, to school districts and government agencies. And it is real hard for us to run a business with 40 people sometimes because of the regulations and complexities of some of the rules.

But some of the things that are really irritating to people like me are we would like to see something happen in the way of a flat tax proposal come to fruition, no exemptions, eliminate all special interest tax breaks. Our small company last year spent about $14,500 to prepare a tax return. That does not sound like a lot of money to some people but it is a lot of money to me. This does not include any of our office personnel that manages to keep records all year long. That is just outside auditing that we paid this money for, which we could have used in a lot better way if our taxes could be so much less complicated—not less money, but just less complicated.

I would like to also talk about what we call estate taxes. I call them death taxes and that is what they are, they are a death tax. And they make it almost impossible to transfer ownership of a small business like ours to our next generation. What would be more unAmerican and cruel than to achieve the American dream, build a successful business and then die and give up 55 percent of your business to the Federal Government—everything you have, they get 55 percent of in the current law. Leave your business without cash when you die, and certainly your business will close, and now it is 43 people that are going to be out of work because there is no way to provide the money.

Right now before the House, there is House Bill H.R. 2190 that deals with this, it gives small business a $3 million exemption, which would be a help, that would be a help to a lot of small businesses, people like us trying to pass our business on to our kids, which is virtually impossible today.

I would like to see technology stay in the forefront of our educational system. I think we have forgot about it, R&D has kind of gone away. I think it is still critical to the country that we maintain our space lead and our challenges into space. We have to continue to move forward because that is where all of our jobs are going to come from, that is where all the new inventions are going to come from.

I look at our educational system now and I get people coming into our store, maybe they are just out of high school, they are

looking for their first job driving a delivery truck for us. We have 18 delivery truck drivers that come and go all day long in our store. I get people in filling out job applications that cannot fill out job applications. You ask them how many 32 cent stamps you can buy for $2 and they cannot figure it out. It is real discouraging to have these people come.

I think our educational system really needs a major overhaul. I do not think there is any reason for the Federal Government to be involved in education. I think the money must come back to the local school districts and be administered here and allow the schools to do the job that they have been hired to do by the public, and not have to operate under Federal mandates all the time.

And we have departments like Commerce, Education, Energy, Labor and Housing and Urban Development, and I honestly cannot imagine why the U.S. Government thinks they need to do all those things for us, when they could all be done better here locally.

One of the questions I think we ought to ask ourselves when you look at these agencies is what good the agency is now doing. And the answer to that question, how can it be done better at the local level of government, is really the situation that I think needs to be addressed. If it can be done better at the local level, take it away from the Federal Government and let us do it.

Thank you very much. [Applause.]

Mr. CLINGER. Thank you very much, Mr. TeGantvoort.

Mr. Tate.

Mr. TATE. First of all, I would like to thank the panel for coming. I would like to split I guess my questions in half; one on taxes and one on regulation, because I think we have heard quite a bit on both. And I would like to start with taxes first.

I know Congresswoman Smith mentioned earlier if you were king for a day, she asked that question to Mr. Carlson. I know Mr. Riggs mentioned that when taxes go up, it comes out of the money that they can use to reinvest in, you know, capital improvements or in hiring new people. And Mr. TeGantvoort, you mentioned also the effect of taxes. What can we do as the debate in regard to tax reform comes along, what should we be looking at to change our system? And what would be the ideal system, not only for fairness, but also for simplicity and job creation?

Mr. TEGANTVOORT. Our tax system is so complicated, it is hard to figure out where to start, but I think if we start with a simple tax system, we would be a lot better off. A flat tax proposal would be something that would make good sense for us, possibly a consumption tax, everybody pays consumption tax. And by that, that is just a sales tax like we pay our 8.2 percent here on everything that we buy. There is no avoidance of it, every time you buy something, you pay your tax. It is simple, it is not complicated, it is a good source of revenue, the people pay fairly. If you are making $1 million a year, you spend a lot more money than if you are making $23,000 a year, you pay a lot more taxes. So again, the more money a person makes, the more money he is going to spend, the more tax he pays, so it is fair. And that gives guys an opportunity.

When we look at our—we used to have a tax investment credit on purchases for equipment and these kinds of things, the ITC is something that could be helping us out. But then that gets back

onto the complexities of all these special interest exemptions that we are trying to get rid of now. I would like to see—well, really, I would like to see us simplify our tax system totally, because it does hurt us. We cannot reinvest money that we do not have because we are paying it all in Federal tax now.

Mr. TATE. Mr. Riggs, what would you—as king for the day over the tax system.

Mr. RIGGS. You have made it too broad by being king, but I would just try and keep it very simple. I would say encourage investment, encourage savings and simplify, simplify, simplify.

Mr. TATE. Gwen Fraser, you talked about kind of an exciting program, the whole issue of vitrification and dealing with Superfund cleanup sites. Have there been numerous studies on this and what have the studies said, and the second part of the question would be are you working with EPA and what kind of relationship do you have with the EPA in working on some of these kind of innovative private sector driven ideas?

Ms. FRASER. We have not worked directly with EPA, we have been working with Battelle Laboratories. I figured if I could not take on the school district, I probably would never get through the EPA. [Laughter.]

The technology is a very real technology and the time has come for something like this, for us to get innovative about this. What I am interested in is to share this opportunity, if we are going to move forward, and make it an exciting opportunity for advancing young people wanting to get a better education. We simply have to instill some excitement in the hope that is out there. We have taken a lot of hope away from our young people and it is no doubt. I mean, listen to us, we are not high on hope, so we are not passing a lot of that on.

There are tons of technologies, Congressman, that are so ready to be shared by this kind of a project, simply getting the paperwork, the red tape, the fear of taking a risk. We do not live in a world without risk, but that is basically what our regulators are telling us. If there is any chance that anything can go wrong, do not change it. So we are still spreading hay bales on Superfund sites. That is kind of dumb.

Mr. TATE. All right, thank you.

Ms. FRASER. And do you not want to know what I would do as queen for a day?

Mr. TATE. Absolutely. Queen for the day in regards to——

Ms. FRASER. Flat tax, 10 percent. Even God does not ask for more than that.

Mr. TATE. OK. [Laughter and applause.]

I think you have some support out there.

Ms. FRASER. I think so.

Mr. TATE. Mr. Larsen, just real quickly, as we work on regulatory reform this year, and especially on the subcommittee which Mr. McIntosh chairs, we saw recent polls of small business and other businesses out there around the country saying their biggest threat they believed was not just taxes, though they were very concerned about taxes, was regulations that they could hardly not only figure out, but many times were in conflict with other agencies. You have mentioned a program Project XL, which you see as a

model maybe that we could apply elsewhere throughout the government. What are your feelings about some of the changes you have seen in Congress today regarding risk assessment—I know you referenced that in your opening remarks—but making sure that, for example, the new regulations are based on sound science? There is a novel concept, they have to be based on fact and not fiction. And the whole idea of cost/benefit analysis. I know my time is running short, but if you could touch on some of those and what that would mean, not only to Weyerhaeuser Co., but to economic development and business growth in the State overall.

Mr. LARSEN. Yes. I think we have consistently before the Congress been advocates for (1) continuing to put good science on these issues. We have got to have facts and data. These issues are very complex, society expects us to resolve many of the issues. The issue is one of efficiency—and we are not putting good science today. The regulatory system in the areas that I am most involved in with environment and energy are much too complex. They are bent on going after the individual who has been abusive and, therefore, they put an enormous amount of complexity, and an enormous burden on the larger part of the population that would like to be responsible. So we need to take on those processes. Through processes such as cost/benefit, establishing priorities by looking at the risks and taking on those issues that are having the greatest impact on our society today, is going to be the best use of our money.

The point that I was attempting to make is, it is imperative on the part of not only government but on the private sector to try to develop good faith relationships with one another. We will not do this by just trying to eliminate all of these government agencies. They have a useful role. The efficiency with which that role is currently being played out is the question. But there is a value added set of activities that they can contribute in the challenges that we are faced with.

On the private side, we have got to learn to work more efficiently with them. And, the combination of this, we have got to work in a more trusting relationship with one another.

Mr. TATE. Thank you. I yield back what is left.

Mr. CLINGER. Thank you very much. Mr. Schiff.

Mr. SCHIFF. Thank you very much, Mr. Chairman.

I would like to talk about one issue, because it is a very hot issue, of course, in Washington right now, and that is the tax structure, and particularly the flat tax. And Ms. Fraser, as queen for a day, you have mentioned that and I believe you did also, Mr. TeGantvoort. But I would like to ask this question. When you say a flat tax, no exceptions—because you see that is one of the debates. There are two debates. Do you want to go to a flat tax? And second, do you want to go to a flat tax with no exceptions? And there is no right or wrong answer, it is a philosophy. But I would just inquire again, I mean, when you say no exceptions, that means no personal exemptions for children, it means no charitable or church deduction, it means no mortgage deduction. I mean I just wanted to double check. Is that still what you are standing on as your recommendation? Ms. Fraser, may I begin with you?

Ms. FRASER. At 10 percent, yes.

Mr. SCHIFF. Well, I do not know what the percent will be.

Ms. FRASER. Well it makes a difference. [Applause.]

Mr. SCHIFF. Well, no, it does not, actually. It does not because it depends what you were trying to spend on. If there is a war, you cannot say the tax is going to be 10 percent because you might need some additional funds to fight the war. So you cannot predict in advance exactly necessarily what the tax will be. Although some of the estimates are right around 17 percent. That is what I have heard, based upon predictions of spending.

Mr. TeGantvoort, would you make any exemptions?

Mr. TEGANTVOORT. Well, I would not make any exemptions, no. I would establish a rate that was fair to everybody and not have all these loopholes and exemptions, I just do not think you need it. I do not think it encourages people to go buy a house, whether they get a deduction. If he had a flat rate tax, it would not make any difference, he is still going to buy a house if he wants one, the average guy is, he is going to own a home no matter what. So you give him all these loopholes and exemptions and pretty soon you are right back to where you are today. The Tax Code is 2 feet thick.

Mr. SCHIFF. All right, well you answered my question very straight-forwardly, I do appreciate it.

Thank you, Mr. Chairman, I yield back.

Mr. CLINGER. Thank you, Mr. Schiff. Congresswoman Smith.

Ms. SMITH. Thank you.

I am going to stay on the tax system, because I believe since I first ran for office, I got a book on campaigning because the guy before me voted for doubling my tax in 1983 or 1982. And so I became a Republican after I had been a Democrat, and got busy and kicked him out because I had to lay off two people because they doubled my tax. And the regulatory pressure on me—I was not a Weyerhaeuser, when they added regulation I had to hire a new bookkeeper, I could not afford. The two things together just made me furious.

So the beginning of my political career came from unfair taxation and I will tell you what I did. I ran seven H&R Block offices, had a franchise. So I was making money from taxes, teaching—where I was making the money is teaching the complicated law changes every year. And every time they would simplify the taxes, I would do real well. But on the other side—in fact, every time they would simplify the Federal tax, I could count on my profit, 1 year it went up 300 percent because people could not understand the simplification.

Then I was a small business person trying to manage up to 125 people, I never was very big. And at the same time, just got furious at government growing and putting people out of work.

I have come over those years to the belief that not only do I think we have to give everybody a rest, but I think we have to simplify. And I have had nine hearings so far and our Small Business Task Force on Taxation and Finance that I chair will hold eight more at the first of the year. The first nine have told us this—people want fairness consistently; people are shocked at the rate it has to be even if you do not have any exclusions, it is nearly 17 percent without the interest, with no deductions, depending on the base, if you give families about a $30,000 base for a family of four, it is still nearly 17 percent. They are shocked, they cannot believe it. They

always say 10 percent should do it. We are going to have to understand in this debate where we are coming from and where we are going. But they even will accept, if they accept the higher rate, that it is simpler and always I get from nearly 50 percent of the people that testify, whatever is fair and other people do not get out of. The biggest issue in the fairness is inheritance tax.

So with that, would you agree to a flat tax proposal that got rid of all other taxes, payroll taxes included, inheritance tax, income tax, all of them, if you could find a way to do it, if that rate were 35 percent, because it just about has to be that, or would you still believe it could not be and would prefer to pay your social security tax separate, your other payroll taxes separate, 10 percent income tax if we could get it to that, and inheritance tax. Now that is a hard one and we are running out of time already.

Mr. RIGGS. I have kind of a visceral response. You know, I would go along with—I am the advocate of simplification and I would go along with an all-inclusive tax and I would go along with that all-inclusive tax even if it were at what I—what you just described to me was an extraordinary rate, if you would commit to cut it in half in 5 years. [Applause.]

Ms. SMITH. And I guess what I would have to ask you is would you be willing to cut the Federal budget and not have the services, half of the services? [Applause.]

I am just going to say I think people are amazed when they see you are already paying 15 percent, with the employers and employees, you are already paying a base rate of 17 to 30 some percent, you are also paying other employment taxes, and when you get done, most of us are paying 30 some percent. And they just do not want to face it as a society. They will come back to say 10 percent should do it. Ten percent is not doing it, 30 some percent is doing it. The government is taking that much. And as we are downsizing the government, we have to get rid of $200 billion in spending. Is it reasonable to believe we would cut the spending by half to generate half the amount of tax? Do you think we really can get there. I know I am baiting you a little, Mr. Riggs, but that is a hard one, is it not?

Mr. RIGGS. Well, you know, I just had the pleasure of being in Washington, DC, recently and meeting with the Department of Labor.

Ms. SMITH. Pleasure?

Mr. RIGGS. And I do not know if you have walked through that building. It is a marvelous edifice. You walk up the steps and it is this gorgeous building, you walk inside and it is like the Gong Show. [Laughter.]

The particular administrative agency that we were visiting I will leave nameless because they will probably read this testimony. The people that we were visiting, as I walked into the—this is a senior level person—as I walked toward his office, there were a stack of a dozen or so personal computers, PCs, stuck in a corner. And I said, "Oh, these are new?" He said, "No, these are old, they have been sitting there for about 18 months because we do not have in our budget the money to buy software or to get them repaired when they need to be fixed." So they are using manual typewriters.

And, you know, the tax rate that my organization and I pay personally is—I think when I view it in the context of where my money is going and how it is being spent, it is too high. And the only way to get after that is exactly what you are doing right now, and that is reducing the size of Federal Government. We can talk about strategies until we are blue in the face, but at the end of the day it does not make any difference unless we begin to get at the problem.

Mr. SCHIFF. Would you yield for 1 second?

Ms. SMITH. I would be glad to.

Mr. SCHIFF. Thank you. I just want to point out, as I said earlier, and I think we certainly agreed on this panel and many others in Congress of both parties, that the goal of reaching a balanced budget is unalterable, we have to do it. We have let things go too far, there is plenty of blame to go around to different parties and Presidents and Congresses, but it is time to do something. So I want to preface what I am saying with that observation, that even some bills I do not agree with some of the decisions, we are just going to have to move ahead and make decisions.

But I do want you to know from our point of view that we get a lot of letters and phone calls that start off like this, "We believe in a balanced budget, but . . . ." Fill in the blank. Add up all the buts and we never balance the budget. And again, I am willing to take the responsibility, as I know my colleagues are, for making the decisions that have to be made. But be aware that we actually get a rather mixed message in Washington on that.

I yield back, thank you.

Mr. CLINGER. Like the old saw, do not cut you, do not cut me, cut the fellow behind the tree—that is an old saw in Washington.

I just have one question, changing the focus a little bit here. Those who argue that we have to retain a great deal of regulatory power at the Federal level will argue not that you cannot trust local governments or State governments, but that you have to have someplace where you set national standards. You have to have national environmental standards, you have to have water quality standards, you have to have some educational standards. You know, we can certainly argue about this, but the question then is can we devolve government back to States and local governments in areas which have been perceived as requiring some national standard that must be met, and by block granting things, are we encouraging sort of chaos out there in terms of maintaining some sort of national standards? I would address this to the entire panel.

Yes, Ms. Fraser.

Ms. FRASER. Well, there are all kinds of ways to get compliance and incentives can look many, many ways. I am from the maritime industry and ship repair has been dismal, and in our area we are not competitive actually and a great number of the dollar difference comes in how much better stewards we are of the environment in the Pacific Northwest.

But one of the things you could do in that industry is you could form the concept of an A-team, and if your shipyard were not on the A-team, it simply did not get the chance to bid on government work. And the first year, that might be 35 percent. Then give incentives for people to engage in the technologies and the equipment

to get them in compliance. Second year is 50 percent, the third year it is 75 percent and in 5 years 100 percent of American taxpayer dollars would not be spent on facilities that were not in total compliance with good environmental stewardship. If you did not want to be a clean guy, you did not get to be in business, you would not hang around very long. That is an incentive that would work.

VOICE. Would you put that person on welfare then?

Ms. FRASER. I beg your pardon?

VOICE. Would you put that person on welfare?

Ms. FRASER. Which person?

VOICE. The person you put out of business.

Ms. FRASER. Well, I am assuming that if the person understands the size of the incentive, if he is a legitimate contractor, he is going to get on that A-team, particularly if you are awarding him the tax incentives to increase his capital expenditures to get there.

Mr. CLINGER. Mr. Larsen, do you think that we need a national standard, say in terms of water quality, air quality, and can we achieve that standard while at the same time giving States much more discretion on how they meet those standards?

Mr. LARSEN. I think you have described the task that we would advocate. We do believe there has to be a base line set of standards across the Nation. Some regions or States might find it in their interest to have more difficult standards. They ought to be given that prerogative.

I think the issue before us today is the tremendous inefficiency that we have built into the regulatory processes that are attempting to impose those Federal standards, and the great complexity, the duplication, the inefficiency, that we find working within the Federal structure is in that aspect of it. So we would advocate much more of the actual process being shifted to State and local government, with a floor of standards.

Mr. CLINGER. Anybody else have any thoughts on that subject? That is really going to be a large part of this debate that we are going to be engaging in, that you need to have some way to ensure you have a national approach, and yet you are also trying to make it as locally administered as possible.

Any other questions of this panel?

[No response.]

Mr. CLINGER. If not, we thank you all, all four of you, for your very great help in our deliberations, and we appreciate you being here. [Applause.]

Congressman Tate tells me we have another witness here and I would ask him if he would introduce him for a comment or two.

Mr. TATE. Sure, absolutely. We actually have a very special guest in the audience. I know he could not make it here earlier, but the State Representative from the Second District which is Graham-Spanaway-Parkland, Tom Campbell is here. Tom, if you would like to use the microphone down here or come up to the front, whatever is more convenient.

Mr. CLINGER. If he comes up here, he has to get sworn in. If he is out there, he does not have to be sworn in.

Mr. TATE. You can be sworn at down there.

[Witness sworn.]

Mr. CLINGER. Welcome. Thank you for joining us.

STATEMENT OF TOM CAMPBELL, STATE REPRESENTATIVE

Mr. CAMPBELL. Thank you, Mr. Chairman, distinguished members. My name is Tom Campbell, I am lucky enough to be elected from the Second District of this great State to represent the people of south Pierce County.

In the last couple of sessions in the State legislature, I have been the prime sponsor of a resolution regarding State sovereignty. I am sure you are familiar with it because many States have passed a resolution very similar, which started in Colorado.

I guess really what it comes down to in the discussion that I am listening to today, I have to tell you I am a little disturbed when I hear about sending money back to us. To be honest with you, you should have never taken it. [Applause.]

So maybe in the short term you need to send it back, but we need to cut the pipeline off as quickly as possible, because we need to start determining—I guess we went through that in this State through Initiative 601, which was how much the State spends. I think we need to look at how much money the Federal Government spends, because when it comes down to it, that is really the determination of which programs are going to be worked, what is appropriate or inappropriate because when you start hitting the lid of that spending, you start deciding, just like a family does, what is more important today, are we going to buy food, pay the car payment or are we going to go out and put some money down on the King Dome, or whatever—to get down to a local issue.

But the fact of the matter is that we all make decisions on spending, and for far too long, Mr. Chairman, the Federal Government simply has not done that. They have just went ahead and raised the taxes. And they have increased our debt to the point that it is just going to bankrupt future generations, and we know that.

I appreciate very much what this Congress is trying to do and the fact that you have come into this district to give us an opportunity to speak. I have to say that my last Congressman, who is no longer with us, never sent me an invitation to come down and testify. And I am very glad that this one has. I thank you, Congressman Tate.

But the truth is we can debate all day long about a percentage of income tax, whether it should be value added or what-have-you. But the bottom line is, we need to decide what is appropriate for our Federal Government to spend on and how much money is it going to take. I would contend, Mr. Chairman, that we are spending lots of money that simply should not be happening. The spending has to stop, some of those hard decisions have to take place.

I have to tell you as a State sovereignty advocate, when I start hearing about setting a base level because the States may somehow not be able to do that, I have to bite my tongue a little bit. I think we are more than capable of setting the standards of good clean air and good water and so on. This area around Auburn and Federal Way is far different from the area that I have further down in the county. That is just in this small area. If you take into account Yakima or Spokane or what-have-you, we all have different very specific problems with our water supply here. And to say that one standard fits all throughout this great United States, to me, is just

unbelievable. And I think that the bottom line—[applause]—the bottom line really is the Constitution, as you know,—and I am not going to preach the Constitution to you—gives the States very large rights and it gave the Federal Government, as our agents, very small rights. And it was meant for a very good reason, it was meant to restrict that power so we do not have an overbearing central government.

And what I would just very politely remind you is that we would very much like to have our sovereignty back and we would like to—may I remind you that we are more than capable, as the people's representatives at the local and State level, to make these decisions. And we can do them for the specific reasons that the people need here in Spanaway, in Federal Way, in Seattle or wherever. We do not need you to make these decisions for us. I appreciate that, but we just do not need it. [Applause.]

Mr. CLINGER. Thank you very much. I think you are absolutely right. To me, the argument that you can only trust the people in Washington to be concerned about the quality of air, water, whatever it might be, whatever the issue might be, is to assume that the people who are living in the very area affected are going to want to spoil the water and pollute the air and everything else. I mean, they are living in that atmosphere and that environment. They are going to be more concerned, it seems to me, than the people in Washington in the quality of that environment. So I think it really is disingenuous to say that the local people are not going to be interested.

Mr. CAMPBELL. Well, I am glad to hear you say that, and I want to very much encourage this Congress, and I want you to know we appreciate very much what is going on right now in Washington, DC. I think the hysteria and the hype that we are hearing about all the awful things that are going on really tell you just how entrenched the problem really is, both in the media and all the people that have a vested interest in this continual tax and spend hysteria that has been going on for so long. We know that you are making some tough choices there and appreciate very much the efforts that you are making. You have got to keep at it, because, you know, everything will come crashing down real fast if you do not.

We have a responsibility here at the State, as you relinquish our rights back to us, to use those properly and to likewise send them back down to the local level as much as possible within our State Constitution, and we will do that. We are up to the challenge, we are more than willing to do just that. And we will certainly work to downsizing our government as well. We have done everything we can within our power and we will continue to do that through the next election cycle, I am quite certain.

However, I think it is important to remember, State workers or Federal workers or whatever, I have to tell you, I am a little troubled sometimes by the rhetoric that somehow they are the answer to all the problems of government. We politicians are the ones that hired them. We politicians are the ones that told them to do what they are doing. Now they have taken off well beyond that, I will grant you that, but we need to lay the blame where it started and we need to go back and whittle down the numbers until they do the job that we delegate for them to do, and nothing more. And I

think that you have started on that process through regulatory reform and so on. And I applaud you and encourage you to not look back. Because if you look back, things are going to start catching right back up with us and I do not think we have that much time. The public wants serious change and they want it yesterday. Not just a little watered down of what we had before.

I thank you very much. [Applause.]

Mr. CLINGER. Congressman Tate.

Mr. TATE. Thank you, Tom, for coming out. Just a couple of points. I could not agree with you more. One of the frustrating things for me as an elected official is when we are talking about block granting out a program out to the States. And people are saying well how do we know these programs are going to get to the people that need it. Well, by God, if they cannot get the job done at the State level, we ought to fire them and get somebody who can.

Mr. CAMPBELL. You bet.

Mr. TATE. And having served in the legislature, and I know you and I know the members that are down there. You can do the job. And I just want to make that point. We know that you can do it, as much as we can block grant out to the States to allow you to make the local decisions for the people of Spanaway and Graham and the Tacoma area, you should be able to do.

Are there any specific areas in regard to block grants that you do not think we have gone far enough so far? I mean, we have talked about, you know, Medigrants as part of Medicaid. We are looking at job training programs being sent out, instead of the 163 programs we have now, we are going to send them out to the States. You know, there are several different programs, welfare reform. What other things would you suggest—we have used the line today, king for the day—what else. I know you had the idea of not going back there at all, keeping the money right here in the State. But in the meantime, before we get to that.

Mr. CAMPBELL. Well there is always a transition that has to be dealt with, I understand that.

Mr. TATE. Right.

Mr. CAMPBELL. Certainly any of the programs that you want to look at, be it Head Start or what-have-you, I think we need to start gearing them back to the States. And some of them are very appropriate and have worked. But some of them have not and I think when we are talking about mandating that program, in fact a failed program, continue to run, I think we need to look at that carefully because in that case, block grant is not appropriate. We need to just make a decision. If a program is not in a positive way, let us go ahead and just cut our losses, let us get rid of it instead of giving the State a mandate, a Federal mandate, which in many cases I would challenge as unconstitutional, but as you know, it comes down—when we were in the legislature together, rather routinely, that we have to spend this money on this area. And I think block grants are appropriate for those situations. But in others, I think you ought to just cut the losses and be done with it. It comes back to, Congressman Tate, once again, to what the Federal Government should be doing.

I get very concerned when I hear that the cold war is over and we have nothing to fear, when I realize the kind of problems that are out in the world and our Federal Government—in my mind, your first duty is national defense. And then the other [applause] areas I think should be down at the local level. And I am concerned when I hear that lack of focus, if you will, on national defense at the Federal level, and getting into everything from water quality to what is going on in the kid's education or how much nutrition is in an apple. It is getting ridiculous and I would really just say we need to focus at the Federal level very carefully. And again, I am not being overly critical because I am very encouraged by what is going on with this Congress. But I want to say again, please do not be caught up in that whole maelstrom of let us do just a little less than what was done before. It has got to be radically different. So block grant what you can, trust the people, they are worthy of your trust.

Mr. TATE. Right. And I can tell you, at least from this committee's standpoint, we believe very strongly in allowing the States to have those rights. In fact, one of the bills that we passed, I think the very first bill, was the unfunded mandates bill, that we should not be sending more burdens out to the States without the money to pay for it. And you are going even one step further, maybe that money should not come to the Federal Government at all, should stay right at the State level and let the States decide.

I yield back my time to the chairman.

Mr. CLINGER. Thank you.

Mr. CAMPBELL. Thank you very much, I appreciate the opportunity.

Mr. TATE. Thank you, Tom. [Applause.]

Mr. CLINGER. We are now going to resume the open mic session of this hearing. We may have a few numbers that are not responded to because I think our crowd has dwindled a bit, but hopefully we will find some people who are interested. We will try it this way for a bit and if not, we will just take whoever wants to talk. 368.

[No response.]

Mr. CLINGER. 358. I think we have someone here.

And if you would just state your name and if you have an affiliation.

STATEMENT OF MIRIAM HELGELAND

Ms. HELGELAND. Miriam Helgeland. At this point, I do not know what to say because there has been so much to respond to.

First of all, was this meant to be a Republican meeting?

Mr. CLINGER. No, it certainly was not, and I would indicate that we had—in fact, we had indicated that we would have some representation from the minority here. They were unable to come at the last minute, but they were certainly invited and would have certainly been included had they chosen to come.

Mr. TATE. In fact, Mr. Sims had to cancel at the last minute.

Ms. HELGELAND. I was sorry that he was not here.

Mr. TATE. We would have loved to have his testimony as well, and if he would like to submit it, I am sure it would be included.

Mr. CLINGER. It would indeed.

Ms. HELGELAND. Then I have another question. I heard on the radio that the changes in Medicare, higher premiums and so forth, that half of that would not go to Medicare, but rather to the general fund. Is that a true statement or is somebody lying to me on the radio?

Mr. CLINGER. Congressman Schiff, I think, is our resident expert.

Mr. SCHIFF. Could you ask me that question again?

Ms. HELGELAND. I heard that half of what would be increased for Medicare, the premiums and so forth, would go to the general fund rather than to Medicare itself, to buildup the fund.

Mr. SCHIFF. Well, there are two ways of paying for Medicare. Let me answer it this way, and if it answers your question—if it does not, I will try to be more specific. There are two Medicare funds, two Medicare programs, and they are funded differently. The larger of the two, making up about two-thirds of the expenditures, is Part A, which is the hospital fund, which is funded solely from the payroll tax, period. The second portion is Part B, which funds physicians and some other services. That is funded about 69 percent from the Federal general treasury and 31 percent from those who pay, those who subscribe to Part B, the beneficiaries.

Under every plan—you say though any savings would go to the treasury—there are not savings in that sense. Every plan before the Congress, whether it is a Republican plan, a Democratic plan or a congressional plan calls for increased spending over the years on both Part A and Part B.

Ms. HELGELAND. I certainly did not understand it when I heard it on the radio and I am not sure I still do, but I want to be sure that——

Mr. SCHIFF. May I have 1 second here? There is one item of confusion and the confusion is the use of the word "cut" in the program. The word "cut" in a program in Washington means not spending as much more as you thought you were going to spend. In English, it means spending less. And there is no proposal to cut Medicare. Now this does not mean there are not program decisions that have to be made and so forth, but every plan proposes to increase Medicare spending.

Ms. HELGELAND. OK, I would like to comment that I did like John Carlson's comment on political momentum. It is true that we should not keep programs that are no longer necessary. I do not agree that we have not had programs in the past that were good. My husband's family did not have electricity on the farm until the 1940's. It seems to me that the REA was good. He says we would not have started it if we knew then what we know now. The G.I. Bill, the FHA, social security, all these things have proven to be successful—maybe mishandled here and there—but they have done the job at the time. The political momentum I would like to see that they do not continue if they are not necessary.

About regulations or about giving everything back to the States, it becomes very parochial sometimes. Are we going to go back to the States deciding who can vote—the motor/voter bill, for instance, has been criticized. Let us not go back to having children have to go to a certain school because of who they are. Let us not go back to polluting the environment as it was done in many cases. I was

glad to see that you said maybe there should be a base line. So let us not throw out the baby with the bath, as they say.

Mr. CLINGER. Thank you very much.

Mr. MCINTOSH. Mr. Clinger.

Mr. CLINGER. Yes.

Mr. MCINTOSH. If I might add, I think you are right on the point, especially in the area of environmental protection, that we need a base line and we to not go backwards in that area. But one of the things that Ms. Fraser was starting to mention and the XL program that was discussed earlier, is the beginning of a new approach in that area where I actually think we can go much, much further than we are right now by switching our mindset from the old command and control approach that was really telling people you have to do this and this and this and this, back to an incentive base where you have property rights and incentives for people to clean up the environment and that we can actually take it to the next level much easier and much more productively by moving away from counter-productive regulations and being innovative in using those market-based approaches.

Mr. CLINGER. Thank you. You know, my sense is that we certainly are not involved in an exercise of getting rid of things just to get rid of them. Obviously we are trying to be thoughtful and careful in the way we go about restructuring government. Clearly there are things the Federal Government does that are going to need to be continued, and perhaps hopefully improved. There are in our view, however, many things that should not be continued, that in fact should be either done away with or sent back to the States. I think that may be a fundamental difference between the Vice President's National Performance Review, and what we are about at this point in the Congress. I think the Vice President's National Performance Review contemplates making a government that works better and costs less, but does not really take a critical look at all of the myriad activities that the Federal Government is involved in. In other words, it really is basically an exercise in saying we are going to keep delivering and keep doing just about everything that we are presently doing, only we are going to do it better.

I think our approach is different in the sense that we also want to make government work better and cost less, but we think there are a number of things that can be done away with at the Federal level. And so that is a basic difference between us.

Mr. SCHIFF. Mr. Chairman, could I add one word here?

Mr. CLINGER. Yes.

Mr. SCHIFF. I think the key is we are trying to look at that. Even though by circumstance you know that we are all Republicans, the Democratic members for various reasons were unable to attend this particular hearing, that does not mean we all agree on every decision, nor would they I am sure if they were altogether.

The point is what we think has been lacking is a strong introspective look at what we are doing and why we are doing it. And that does not mean we will all come to the same conclusions, but we are all determined to take a look, section by section, program by program, department by department. And that is what we are trying to do here.

Mr. CLINGER. Thank you. We are now at number 384. Anybody got 384? Ah! We have a winner in the balcony.

STATEMENT OF TREASURE SHOEMAKER

Ms. SHOEMAKER. Hello. My name is Treasure Shoemaker and I am from the newest city in the State of Washington, I am from Edgewood, formerly Puyallup.

I would like to make some comments on the comments that were just made, plus the fact that I would like to congratulate the whole new Congress on the direction that they are taking. Stick with that contract, guys, do not turn your backs. [Applause.]

And I want to clarify for myself and for the former speaker what I heard Mr. Carlson say. And what I heard Mr. Carlson say was if the program, the REA, were starting today, would you start it—not back in 1935, 1944, whenever it started. I was a child in a darkened house too, I remember lamplight. But do we need that same thing today? No, we do not. We needed it then, it has done its job, get rid of it. OK? And there are many other programs that go the same way.

So, as I see it, if you will stick with our Constitution, which has stood us good for 200 years, give us national defense, fiddle around with foreign policy if you must, but get the heck out of our daily lives.

Thank you. [Applause.]

Mr. CLINGER. As they say, strong letter to follow, I think, on that one.

370.

[No response.]

Mr. CLINGER. All right, how about 355.

STATEMENT OF BUD FLEISCH

Mr. FLEISCH. I am Bud Fleisch and I am the chairman of the East King County United We Stand, and that does not mean we are for a third party—we are not.

I just want to thank you all for coming. I am sorry that Linda left. I wanted to ask her how far she was getting with her program on campaign reform, and I wondered if any of you could tell me if she is getting her fellow Representatives to sign on, or not.

Mr. CLINGER. Indeed she is, and some of the other Members here can speak to this as well. I think there is no question that she has gotten the attention of the leadership, the Speaker has made a very firm commitment to deal with that very expeditiously, if not this session, which will end sometime between now and Christmas, early in the next session. So there definitely, I can assure you, will be a debate, a consideration and votes on campaign finance reform.

Mr. SCHIFF. Mr. Chairman, could I ask you to yield for just 1 second on that?

Mr. CLINGER. Certainly.

Mr. SCHIFF. I want to just take a moment and talk about campaign finance reform in two respects, very briefly, especially because United We Stand has made a major issue of that, as well they should.

Two things—first, if the issue is PACs as such, political action committees, if they are going to be banned, then you have to have

a contingent requirement that all contributions come from at least the State of the individual. I do not know about district because district lines can be—the side of a street can separate a district. But at the very least there has to be a restriction that all contributions have to come from that candidate's State. The reason for that is there are several Representatives who say we do not take PAC funds. Well take a look who their individual contributors are, and they are all the Washington lobbyists, you see. And they pretend they do not get PAC funds.

And special interest funds, that is a little bit of a separate term. And I just throw out the fact that even if you say all contributions must come from the State, I do not know how you control those people within that State, whatever group they are coming from, from saying we are going to get together and we are going to raise funds for that candidate. I do not propose to solve that now, but I would just distinguish that special interest does not always mean political action committees.

But I bring that up because I congratulate you, I meet with my United We Stand group a lot and some issues we agree on and some we do not, but that has been a premiere issue raised by your organization and I am sure something will happen on it during this Congress.

Mr. FLEISCH. Well, it is a multi-faceted problem.

Mr. SCHIFF. It is indeed.

Mr. FLEISCH. And it is very tough to figure out. And I do not blame any of you for taking PAC money, go ahead and take it right now. But at the same time, I urge you to vote for some kind of legislation to make it illegal. Then when it is illegal, do not take it any more. But I do not want you fighting battles, particularly you know, Randy and Linda and all, I do not want you fighting a battle with your hand tied behind your back.

Mr. SCHIFF. What would you think of an additional requirement that if you are wealthy, you are limited in what you can put in of your own money into a campaign?

Mr. FLEISCH. I think that might be the answer.

Mr. CLINGER. Otherwise we might have nothing but millionaires.

Mr. SCHIFF. Otherwise you might have nothing but millionaires in Congress.

Mr. FLEISCH. Yes, that is right.

Mr. CLINGER. Thank you very much.

344. Randy Tate just gave me a great button here, the question is "How much is a billion?" We have been talking here about the budget and the cost of things and so forth. And the answer is, "Well, if you shot one Congressman out of a cannon every minute for 25 years, you still would not reach a billion." [Laughter.]

Sort of ominous, I think.

Yes, ma'am.

STATEMENT OF LANA MILLER

Ms. MILLER. Hi. My name is Lana Miller, I am from Federal Way. And I am going to read what I have to say.

We have alcoholics, drug addicts, compulsive gamblers in our society and while we try to change their behavior and stop their destructive habits, we need to stop the compulsive, addictive process

of our working population thinking and believing it is the U.S. Government's responsibility to provide them with their only source of retirement income; i.e., social security and health insurance, Medicare. We need to educate and retrain people's thinking, not to live for the here and now; to save a percentage of their money, not only for emergency needs but for retirement benefits. And the government should never have continued this social program, because just like welfare has stifled our individuals to work and be productive, social security and everything under its umbrella has stifled Americans to save and prepare for their declining years. It needs to be stopped.

Mr. CLINGER. Thank you very much. I think you would not find any objection I think on this panel to that. [Applause.]

346.

STATEMENT OF CURT ANDERSON

Mr. ANDERSON. My name is Curt Anderson, I am from Tacoma. I represent Associated Builders and Contractors and my company is Air Systems Engineering. We do air conditioning and heating work for commercial buildings.

We hear a lot about the Federal Government setting a standard that is true for everybody for everything. I would say that we are looking the wrong way. We do work for a number of Federal agencies and they do not have the same standards, they do not have anywhere near the same standards for post office construction, for say Army construction or for office facilities for all the different agencies. They are as different as 48 or 50 States might make them. So there is no standard in the Federal Government. It depends on the agency, it depends on a particular inspector and so on.

Second, on a number of occasions I have been in Washington, DC and when you fly into Washington, DC, you see all the buildings, then you look across the river to Virginia and you see all the buildings, Crystal City, Falls Church, all the different areas, then you look into Maryland and you see all the buildings and you recognize this is just the home office. I remember when I lived in California when President Reagan was Governor, and I remember he just said we are cutting some agencies, cutting all agencies by a certain percentage and let them determine what is important or let their constituents determine what is important. This is not vastly different from 601, but somehow—obviously there are agencies that are bad, but somehow we have got to put the lid on spending, as was said awhile ago, and let the requirements that are good requirements come to the foreground and use those and get rid of some of the agencies—just have some of the people that work in the government go out and work in the private sector. We just do not need all that service.

In the construction industry, one of my pet peeves really is some of the OSHA regulations. We try to run as safe a company as we can, we have a very good safety program and good safety record. But it is discouraging when an employee may go out on a weekend and go hot rod racing, go four-wheeling, go snow skiing, even go bungee jumping, and then come back on Monday and if we have him working on a platform a foot higher than the table where you

are sitting, we have got to have him wear a full body harness to protect him. OSHA says they estimate that will save nine lives a year for several hundred million dollars. Now what price do you put on lives—you cannot. But I suggest the cost/benefit ratio of this as an example, and many, many of the safety regulations, the cost far outweighs the benefits and the agency is just going crazy and there needs to be something done to cut back on this as well as other Federal agencies.

Thank you. [Applause.]

Mr. SCHIFF. OK, No. 9516359—359 are the last three numbers.

[No response.]

Mr. SCHIFF. Last three numbers, or last four numbers are 6348.

[No response.]

Mr. SCHIFF. This will be faster than I thought. Last four numbers, 6337.

[No response.]

Mr. SCHIFF. Last four numbers, 6345.

[No response.]

Mr. SCHIFF. Last four numbers, 6380.

[No response.]

Mr. SCHIFF. Last four numbers, 6347.

[No response.]

Mr. SCHIFF. Last four numbers, 6339.

[No response.]

Mr. SCHIFF. Last four numbers, 6367.

[No response.]

Mr. SCHIFF. Last four numbers, 6332.

[No response.]

Mr. SCHIFF. Last four, 6350.

Welcome. We would appreciate it if you would be kind enough to first state your name and if you have any affiliation with any organization that is bringing you here, and if you would state that.

STATEMENT OF JODI DIONNE

Ms. DIONNE. My name is Jodi Dionne, I am from the United We Stand Group, Sixth Congressional District.

And first of all, I would like to commend the delegation for coming to us and listening to us. That is very important to us, especially Randy and Linda, who have been our stalwarts in this State for us.

Your most important job, as I see it, is a re-education, not only of the government, but of the people too, because the government was never meant to be our sugar daddy. And frankly, I am getting to the point where I resent it.

Change is not very comfortable. But it has to come whether we like it or not. And I would challenge you to do several things to regain the trust of the American people. The first thing you have to do is make America come first. I am tired of people being bailed out in other countries, companies to deal outside of this country getting bailed out and getting tax credits to go out of this country.

I think you need to allow your constituents to truly elect you with their own tax dollars or with their own private funds. Do not allow special interests in Washington, DC or foreign lobbyists to

pay the freight on your campaign. Let us do it. If we want you, we will give you the money.

And I would also ask that you back fully and work to get Linda Smith's campaign finance reform bill through all the way, not just through the House of Representatives, which is where everything is being done, and everything is being stalled in the Senate or by our President.

And I would like to see some kind of an implementation of performance audits. We have been trying to get them in this State and we get it passed and the teeth are pulled right away. But performance audits are the only way to know whether any agency is truly doing its job.

I would like you to repeal the 1933 War Powers Act. I am tired of the President saying by Executive order I can do what I want.

And I want you to do away with the Federal Reserve. Congress is the one that has the right to regulate and print our money, not the Federal Reserve.

Thank you. [Applause.]

Mr. SCHIFF. Thank you.

Let me take the liberty of the observation that the War Powers Act is intended to limit, however ineffectual at times it has been, the power of the President to commit U.S. troops. Without the War Powers Act, Presidents were still doing that.

Any other members want to comment at this time? Mr. Tate.

Mr. TATE. I would like to comment on the fact that you referenced corporations, you know, the fact that—I guess the word is corporate welfare, is a good way to sum it up. And I have—you know, one of the proposals that I have supported is getting rid of the Department of Commerce, which I think is the embodiment of corporate welfare. But even further than that, in this country, we have something called the Market Promotion Program, which uses Federal tax dollars to promote large corporations' products overseas. As good as that may sound to create jobs for companies here and create wealth for these companies, it should not be the taxpayers that fund the bill. These companies are like Ernest & Julio Gallo, Pillsbury and other companies, and even though it may benefit some of the farmers in our State, I believe that if we get rid of some of these subsidies, that we will be able to balance the budget and benefit everybody in this country, not just a few.

And so I can tell you at least from your local Congressman, that we are working hard to eliminate some of those sorts of programs, from my perspective.

Mr. SCHIFF. Any other comments?

[No response.]

Mr. SCHIFF. Let me go back to calling the last four now for additional speakers. 6331.

[No response.]

Mr. SCHIFF. 6336.

[No response.]

Mr. SCHIFF. 6354.

[No response.]

Mr. SCHIFF. 6364.

[No response.]

Mr. SCHIFF. 6361.

[No response.]
Mr. SCHIFF. 6333.
[No response.]
Mr. SCHIFF. 6338.

STATEMENT OF RICHARD KENNEDY

Mr. KENNEDY. Mr. Chairman, committee members, my name is Richard Kennedy, I am the mayor of the city of Des Moines, WA, population 22,000, located a few miles to the northwest of where we are here today.

Before I start my comments though, I would like to express thanks to Congressman Randy Tate, not just for the hearings today, but for the help and support he has given the city of Des Moines. In my 13 years of elective office, he is the elected Federal official that has given the most attention and the most help to our community. And Randy, I want you to know that we really appreciate that.

Mr. TATE. Thank you very much.

Mr. KENNEDY. Two things I would like to talk to the committee today about. One is about Federal rules that come with Federal dollars that come to our city. And this can be best illustrated with a small story about a traffic light we wanted to build near one of our community colleges. The intersection was kind of busy and it would be to everyone's benefit to have that light in. So we did some preliminary design on it and applied for some Federal funding. The total cost would be around $150,000 and I think we were going to receive around $100,000. And we do appreciate that. The project was going along quite well until it was decided during one of the engineering phases we had to buy a tiny strip of land to expand the right-of-way because we had to move one of the poles out of the way of the road a little more. That strip was approximately 5 feet by 50 feet. At that point, Federal acquisition rules kicked in and the situation got a lot more hazy.

As opposed to requiring a certain outcome, these Federal rules require we follow certain procedures, regardless of the size of the project. After our staff looked at those, they threw up their hands, finally had to go out and hire a consultant firm to the tune of $24,000 to be able to meet the Federal performance regulations on buying this 5 foot by 50 foot piece of property.

Now again, we appreciate the $100,000, but the fact that almost 25 percent of that had to be spent going out to an outside firm to meet these very onerous regulations really does not help us that much. What I would like to see is that for the smaller projects, waive these requirements. If you are doing a multi-million dollar freeway interchange, maybe they make sense. But if you are putting in a stoplight in a community my size, believe me, gentlemen, they make no sense. They increase the cost of the project and they delay it. The stop light was supposed to be in a year ago, we will be lucky if we get it in by next year. So that is the first area that I would ask for some congressional action on.

The second one—and I just have to quote from some of the comments made by you gentlemen—how we are against politics as usual, spending recklessly, not having authority, supporting losers, sick and tired of lies, not having cost benefit. One of my favorite

subjects is a Senate request that is now sitting in front of you gentlemen dealing with a letter of intent asking the FAA to approve funding for a third runway at the Seattle-Tacoma International Airport. Now it is kind of strange that this comes before you at this time. The environmental impact statement process is not finished on this. The Puget Sound Regional Council, which has authority to grant—has the authority to allow the Port of Seattle to proceed with this project—has not granted such authority. Even the Port of Seattle District Commissioners have not voted for this. Yet we have this project going for a letter of intent in one of the current appropriation bills.

Now why should we be concerned about that? Well, one of them is we do not know the cost, the true final cost of this runway. Unfortunately, the runway has to be built about 200 feet in the air, which means they are going to have to put 25 million cubic yards of dirt underneath it. That is going to be, without a doubt, and almost by an order of magnitude, the most expensive single runway built in U.S. history. Now that is not all of it. They are going to have to do other, "improvements." And the ones that they have talked about so far raise the price of this single runway and associated improvements to $1.4 billion.

Mr. SCHIFF. Mr. Mayor, can I interrupt to ask you a question?

Mr. KENNEDY. Yes.

Mr. SCHIFF. I hope you will accept an outsider's question on the issue.

Mr. KENNEDY. Certainly.

Mr. SCHIFF. You are now about the third or fourth person I have heard today speak up against or at least question this third runway at the Seattle-Tacoma Airport. Who is for it?

Mr. KENNEDY. The Port of Seattle.

Mr. SCHIFF. And are they elected officials?

Mr. KENNEDY. Yes.

Mr. SCHIFF. OK, thank you for answering that question. Please go ahead.

Mr. KENNEDY. Yes, they are elected county-wide as opposed to districts.

Mr. SCHIFF. I see.

Mr. KENNEDY. Continuing on. So we have a project where you do not know what the final price tag is, we do not know whether it is going to get approval from any of the organizations locally, yet the Senate is saying that we need to have this letter of intent placed in the law.

If we are going to be truly reforming government and looking at the costs and benefit, I think the House should require a cost/benefit analysis of this current project, because the amount of Federal dollars that are going to go into this one runway project are going to exceed by far anything spent on any single runway in the United States. And it is important if we are going to be cutting back on wasteful projects and pork projects, that we examine this particular project.

And I am not saying at this point—you know, personally, I do not want to see that runway built. But as the steward of my tax money, I do not want the U.S. Congress giving a carte blanche to a project that is probably, based upon all of our readings, is fiscally

not responsible, that will not meet the long-term air transportation needs of our region, and will cost an undetermined amount of money. So I would urge the committee and the members individually to seriously consider this letter of intent in the appropriation bill, to turn it down and to wait until the final environmental studies are done, to wait until the various approvals by the local organizations are done, and after a cost/benefit analysis is done. Then with the facts in mind, then make an informed decision on whether you are going to spend this huge amount of money, rather than just writing a blank check.

Mr. CLINGER. Thank you. And if I may just respond.

Mr. KENNEDY. Yes, sir.

Mr. CLINGER. I do sit on the Transportation and Infrastructure Committee. Under existing law, which we have recently changed, it is mandated that before the FAA can undertake any project under the aviation trust fund—this runway would be funded out of the aviation trust fund under an entitlement and possibly some discretionary money the FAA has—there must be a cost/benefit analysis done and they are very strict on that. And if it does not make the cut, it will not be funded. So there is an existing requirement for a cost/benefit analysis. And I know of at least two or three proposed projects that have been rejected. If what you are saying is right, it sounds to me as though this would be rejected as not meeting that criteria.

Mr. TATE. Mr. Chairman, if I may, it is my understanding, and I definitely have not served on that committee near as long as you, is an LOI would automatically allow the Port to begin its bonding capacity, even if the FAA had not approved airport improvement funds.

Mr. CLINGER. Yes.

Mr. TATE. And so our point is we should not have any kind of letter of intent or commitment to a future Congress to fund a particular project unless it has already gone through all the environmental hoops and everything first. It is basically committing the Congress to a project which we cannot even tell you how much it is going to cost, estimates as high as $1.4 billion, as was stated so succinctly by the mayor, the most expensive runway project in the history of man. And it is not often that a Member of Congress comes to you and says we do not want something, and I would like to say that we do not want something when it comes to this particular runway.

Mr. KENNEDY. Thank you, Congressman. [Applause.]

Mr. CLINGER. Thank you very much, Mr. Mayor.

And we are now unfortunately coming to the conclusion of this hearing. The committee will be flying to Los Angeles this afternoon and this evening, we are going to hold a hearing there in Long Beach tomorrow morning and afternoon, discussing some of the same issues and topics that have been under discussion here most of the day, and following that, we will be in Albuquerque, NM, home of our good friend, Steven Schiff, in his district, for a similar hearing on Monday.

But before we conclude the hearing, I want to, on behalf of the Government Reform and Oversight Committee, thank the principal of Thomas Jefferson High School, Ken Olsson, along with Lori Wat-

son, for their very hard work, very efficient work, in preparing for our visit here today. [Applause.]

A special thanks to Andy Ehrlich, who is Congressman Tate's legislative director, for his help in organizing this event here today. And a very special thanks to the students of Thomas Jefferson High School, for assisting us all day today. [Applause.]

I do not see very many of them here, so I hope they will get that word, that we really were very grateful for their attendance and for their participation and their great help.

And Congressman Tate, it has been a real pleasure for us to be here in your district to meet many of your fine constituents and to hear their views and their suggestions on how we can make Government better, not just in the 21st century, but today. As I think somebody said, we cannot wait until the 21st century, we have to undertake this job earlier. So we are grateful to you, Congressman Tate, for your great hospitality while we have been here in the great Northwest.

I want to thank all of the witnesses who appeared and the people of Washington for participating in this hearing. And those of you who have been here all day, we are grateful for your persistence and for just hanging in with us all day long. I think it is very important that we maintain an open dialog between Members of Congress and the American people and that is why we are out here in the field taking testimony and listening to you.

It has been a great pleasure to be with you all. Thank you and good day. The committee stands adjourned.

[Whereupon, at 2:42, the committee was adjourned.]

[Additional information submitted for the hearing record follows:]

TESTIMONY BY: GARY L. SMITH, EXECUTIVE DIRECTOR,
INDEPENDENT BUSINESS ASSOCIATION OF WASHINGTON STATE
BEFORE:
HOUSE COMMITTEE ON GOVERNMENT REFORM AND OVERSIGHT
PRESENTED:
OCTOBER 6, 1995
THOMAS JEFFERSON HIGH SCHOOL, AUBURN WASHINGTON

Thank you Mr. Chairman for this opportunity to present comments to the Committee. Mr. Chairman and members of the Committee, I represent over 6,000 small business owners from across Washington State. Many of the small businesses they own are struggling to survive. Government, particularly the federal government, has much to do with making them struggle.

Two major federal government activities greatly compound the problems these businesses face and significantly add to the struggle they must deal with to survive. They are:

Federal Taxes
Federal Regulations

Today, I want to focus my comments on government regulations. Over 70% of the government regulations small businesses must struggle with have their origin from the federal government. State and local governments add to those federal regulations and make them even more complex and confusing, but over 70% of ALL government regulations small business must comply with have their origin from the federal government. On page 3 of our written comments, we offer a number of suggested regualtory reform solutions to this very important and difficult problem.

We have provided the Committee with a packet of exhibits. I would like to take just a few moments now to review those exhibits with you.

* The first two pages of this exhibit is a listing of the types of regulations small business owners face from various federal, state and local governmental agencies.
  * There are 58 sets of regulations from 28 federal, state and local agencies
  * Together there are over 100,000 specific regulatory requirements imposed on a small business owner from these regulations.
* The third page of the exhibit is a copy of a photograph of the federal, state and local regulations that apply to the "average" small business. The regulations on the left side of the photo are federal regulations. The regulations on the right side of the photo are state and local regulations. Many of the state and local regulations include parallel provisions with the federal regulations, with some additions.

Both the Administration and Congress are currently implementing regulatory reform provisions on the federal level and are talking about improvements that have already taken

place. Page 4 of our exhibit is a startling example the federal regulatory problem is as bad as it ever was - RIGHT NOW. While some improvements may have been initiated, they are too little and are not sufficient in addressing the huge regulatory problem imposed by federal agencies.

* Page 4 of the exhibit is an article from a very recent publication by our local air pollution control agency. It explains that a new 1995 federal regulation which applies to small businesses that do chrome electroplating and anodizing are nearly 1 inch thick and are so complex that the local regulator - who happens to be an engineer - had a very difficult time understanding what they require.

  After substantial work, the local air quality engineer finds that the local regulation dealing with the same issue, which is currently 1 page long, will have to be expanded to a total of 2 pages to incorporate the requirements of the federal regulation that takes up a 1 inch thick document.

* The final page of our exhibit is our letter to the Vice President making him aware of this example and this specific issue and asking for his and the President's intercession to fix this problem. To date, we have received back to very generic responses enclosed in envelopes marked "Blk. Rt." below the federal postage franc..

Mr. Chairman and members of the Committee, the issue of excessive government regulation is far more important than verbal promises and form letter responses to concerns expressed by small business people.

Federal government regulations are overwhelming and out of control:

* It is NOT humanly possible for a small business owner to know all of the regulations they are required to comply with, and what to do to comply.
* The shear number and complexity of federal regulations makes every small business owner a law breaker.
* There is NO ONE in the federal government that knows all of the federal regulations that apply to small businesses and how to comply with them, YET a single individual owning a small business is supposed to know all of them - PLUS run a successful and profitable business. It cannot be done!

Federal regulations are choking the economic engine of small businesses in the U.S. People in business now are going out of business at alarming rates. Families with family owned businesses are closing them down rather than passing them down to the next generation. The frustration level among small business people due to government regulations is at an all time high.

The regulatory climate in the U.S. is adversarial between the regulators and small businesses. The relationship between an inspector and a small business owner is confrontation, not cooperation. We are wasting tremendous amount of our national resources due to these

attitudes and this climate. Cooperation is constructive and relatively efficient as compared to confrontation which is destructive and very inefficient.

Federal regulations have turned the American Dream of owning and operating a small business into the American Nightmare.

SUGGESTED SOLUTIONS

Below are suggestions to the Committee on effective ways to begin to correct the regulatory morass we have in the U.S. Unfortunately, we know of no "quick fix" or magic solution. It appears that the solution will take years to achieve, but its time to start NOW.

* **EDUCATION BEFORE ENFORCEMENT**
  This is a proven policy that IS NOW in operation in Washington State. Simply put, the regulator provides education to the regulated to voluntary comply with a regulation and ONLY fines if the regulated entity fails to comply within a reasonable period of time.

  Inspectors do NOT FINE on their first visit, they educate and set reasonable time periods for the regulated entity to come into compliance.

  One Education Before Enforcement initiative in Washington State achieved an eighty time increase in efficiency. That is eighty, eight zero time increase in efficiency. Previous command and control enforcement inspections required 60 hours to complete, including the levying of fines and handling of appeals. This was replaced by 45 minute Education Before Enforcement visits by inspectors where no fines were issued, no appeals filed and compliance was largely achieved. IBA will be pleased to provide additional documentation of this initiative if the Committee desires.

* **ELIMINATION OF EXISTING UNNECESSARY REGULATIONS**
  The federal agencies must be required to begin NOW to review ALL existing federal regulations, the violation of which subjects the violator to some type of sanction, and eliminate all but the most vital of those regulations. Congress must set criteria against which agencies must measure all of their existing regulations and regulations that fail to meet these criteria will be repealed. This should be done as expeditiously as possible, but likely will take 5 to 10 years.

* **REGULATORY CRITERIA FOR ALL NEW REGULATIONS**
  Congress must set a set of criteria against which all new regulations are measured and only those new regulations that meet all of those criteria may be adopted and implemented by the agencies.

* **CLEAR AND SPECIFIC CONGRESSIONAL POLICIES**
  Congress must become much more specific in the policies it adopts rather than leaving major policy decisions to agencies to be adopted through administrative

regulation. Congress must be part of the regulatory solution for any solution to be successful.

* **REVIEW OF EXISTING GRANTS OF AGENCY REGULATORY AUTHORITY**
  Congress must revisit all past policy statements and grants of regulatory authority to agencies and revise all of those grants which are not clear and specific.

* **AUTHORIZE JUDICIAL REVIEW OF REGULATORY FLEXIBILITY ANALYSES**
  Congress must make agency Regulatory Flexibility analyses subject to judicial review. Unfortunately, many agencies fail to do an adequate Regulatory Flexibility analysis on proposed agency regulations because there is NO enforcement mechanism if they fail to do an adequate analysis.

Mr. Chairman, we stand ready to work with and assist you and all of the Committee members to implement effective and vital regulatory reform in our federal government. We will be pleased to answer any questions you may have or to provide additional information as required.

Thank you.

KARL EGE
GENERAL COUNSEL
FRANK RUSSELL COMPANY

My name is Karl Ege and I am General Counsel and a member of the Board of Directors of Frank Russell Company, a global investment advisory and management firm headquartered in Tacoma, Washington. Russell is recognized as a premier global asset consultant and investment manager, providing investment strategy consulting on over $500 billion in assets to over 200 institutional investors worldwide, including domestic clients such as the pension plans of General Motors, IBM, AT&T, Xerox and Boeing, as well as similar-sized institutions overseas. In addition, Russell and its affiliates serve as investment managers for over $22 billion of collective investment funds, including mutual funds and commingled employee benefit funds.

As a leading adviser to the pension industry worldwide, we have become increasingly concerned that insufficient attention has been devoted to the developing crisis in our domestic Social Security system. We have observed the steps being taken in foreign countries to address the coming pension crisis in those jurisdictions, and we believe some of these approaches bear some measure of consideration as Congress faces what is likely to become the most serious fiscal challenge our nation will face during our lifetime.

The current Social Security program operates as a "pay-as-you-go" system. There is no separate "trust fund" for current and future beneficiaries under the current system. Contributions paid by workers today are used to pay the benefits for current retirees; any excess is applied to reduce the current year's fiscal deficit. The net result is that the public is misled into believing that there are funds "set aside" for their individual benefit (as is the case with state and local governmental and private corporate defined benefit plans). Without contributions from payroll taxes, the current year's fiscal deficit actually would be larger than that reported. Looking forward, the amount of the "unfunded liability" of the Social Security System is enormous, amounting to several trillions of dollars.

A pay-as-you-go system might have been appropriate during a period when the size of the workforce was increasing steadily and average life expectancies were not much different from the age at which benefits commenced. But as workforce growth has slowed, and life expectancies have continued to rise, benefit promises cannot be sustained without either significant and continuing increases in contribution rates or substantial overhaul of the existing system. Frank Russell Company believes that the latter course of action is the far more preferable alternative. The problem should be addressed now, rather than waiting for the dramatic impact on the system when "baby boomers" begin to retire early in the next century. Two facts concerning the Social Security System are generally accepted today: First, benefit outflows will exceed contributions commencing in about 2013; second, individuals retiring early in the next century will receive substantially below market or even "negative" returns on their contributions to the system. The combination of these two factors will have serious social, fiscal and political implications unless the problem is addressed now.

We believe the more prudent course of action for Congress to consider is a gradual privatization of the current Social Security system to a National Retirement Program. By transitioning to a fully-funded private system, we can provide our citizens with a better retirement safety net which is a boon, not a burden, to our national economy, and which provides significantly greater benefits to individuals.

We believe that the type of National Retirement Program that should be considered should have the following features:

- Contributions to the program would be mandatory and would be matched by employers.
- A portion of the contributions would be contributed to a true "safety net" such as the current Social Security system, to provide basic retirement benefits for those with little or no work history or the working poor.
- The remainder of the contributions would be contributed to an account maintained for the benefit of the individual, much like an individual IRA account. This account would be managed by a professional firm selected by the individual (perhaps from an approved list of organizations that meet certain standards).
- The employee would be fully-vested in this private account, and the account would follow the individual if s/he moved to another employer, or temporarily left the workforce. Because this account would be a personal asset, at death it would pass to heirs as part of the individual's estate.
- Because the assets in the privatized plan would be invested in an asset allocated mix of equity and fixed income securities, a National Retirement program would provide needed capital for job creation, thus stimulating the national economy.
- Individuals would be permitted to voluntarily contribute additional funds to this account, increasing savings and investment into the economy.
- Similar to Social Security, benefits could not be withdrawn from the account until the individual reaches retirement age, dies or becomes disabled.

Transition to a privatized national retirement program should be gradual so as not to impact adversely any current retirees or older workers who would have insufficient time to accumulate assets in the program to make up for the decline in benefits under the current Social Security system. Determining the pace of transition involves relatively straightforward actuarial calculations, and should not be a deterrent to implementation of this program. It will likely take from 20 to 30 years to move from our current system to a privatized program, depending on the level of safety net benefits that the government wishes to maintain for all Americans, and retirement age, life expectancy, investment return and inflation assumptions.

We believe that the move to a National Retirement program should be accompanied by the following additional reforms:

- There should be a gradual increase in the retirement age to 70 (or perhaps greater). When social security was adopted the average life expectancy of American citizens was less than the age of eligibility for benefits. Benefit promises were easy for the Government to keep - few people collected benefits, benefit levels were low, and those who did collect benefits received them for not more than a few years. Today there is an increasing disparity between the minimum age for benefits and the average life expectancy.

- There should be a gradual decrease in cost of living adjustments for the "safety net" portion of the national retirement program. As individuals increasingly receive investment returns for their contributions (which returns take into account inflationary effects), there is less need for "indexing" the benefits.
- Those benefits that are received which represent gain in excess of contributions should be taxed, similar to the manner in which IRA or 401(k) benefits are taxed. Basic safety net benefits should not be taxed.
- The present positive cash flow in the Social Security System should not be used to support government consumption, but rather to add to national savings.
- Government tax and regulatory policies should be altered to encourage private pension savings. We suggest that consideration be given to repealing the full-funding rules (such as those contained in OBRA87) that make it increasingly difficult for defined benefit plans to fund themselves appropriately.
- Discrimination rules should be streamlined and simplified.
- Employers should be encouraged to provide employees with appropriate investment guidance without risk of liability. For example, information provided by an employer or its adviser on past performance of financial markets should not make the employer or its adviser liable if future performance is inconsistent with past experience.

In summary, we believe that the foregoing action would serve to reduce the federal deficit considerably and would provide needed capital for investment into our nation's business, economic and social infrastructure. If this problem is not addressed now, any progress made today in reducing our national deficit will be greatly outweighed by the negative effects of the coming Social Security crisis in the early part of the next century. It would increase national savings and would improve the growth and competitiveness of the US economy.

We appreciate the opportunity to share with you our thoughts on this most important subject. We are willing to meet with members of the Committee to discuss in greater detail the suggestions outlined above.

Record

AAA SYSTEMS, INC.

206/922-1356
1-800-342-5017
FAX: 206/922-1714

October 6, 1995

The Honorable Congressman Randy Tate
33305 First Way South
Federal Way, WA. 98003

Dear Congressman Tate,

This statement is brought to you by the staff of AAA Systems, Inc. on MTMC's proposal to re-engineer the Personal Property Movement for the Department of Defense.

AAA Systems, Inc. is a small business that has been in the International traffic movement for DOD approximately for 10 years, and has been successful in this service. With the implemation of re-engineering, AAA Systems, Inc.'s employees would with no doubt, be standing in the un-employment lines.

We believe that the program that exists today is a fair and successful program that has 158 carriers throughout the United States. There are 40 carriers in the state of Washington today. All 40 carriers have been meeting together to come up with a solution that would fix the program, other than execute the entire program to adopt a program that uses commercial practices, found by the GAO which concludes that such practices would have better services at less costs to the military member. We, of the industry have seen these reports, and find them untrue and unfair.

We respectfully ask, that as residing residents in your area, and as a successful small business, for your assistance and guidance to continue to sustain commerce in the state of Washington, and continuing business for the DOD.

Thank you for your understanding and attention for this very critical issue.

Sincerely,

AAA Systems, Inc.

Cindi Nelson
Office Manager

Sandy Johnston
Assistant Clerk

Karen Nelson
Vice President

AMC

1520 54TH AVENUE EAST • TACOMA, WASHINGTON 98424

PIONEER VAN LINES, INC.

1220 SOUTH 356TH ST.
SUITE A9
FEDERAL WAY, WA 98003

TEL: (206) 952-3996 (800) 325-2705 FAX: (206) 952-3998 TLX: 9102401744 PIONEER VAN UQ

October 6, 1995

TO:
Congressman Randy Tate
33305 First Way South
Federal Way, WA 98003

FROM:
Pioneer Van Lines, Inc.
and its employees
1220 S. 356th St., Suite A9
Federal Way, WA 98003

SUBJECT:
Opposition to Department of Defense/Military Traffic Management Command "Reengineering" of Military Household Goods Transportation

Pioneer Van Lines, Inc. (PVLN), its owners and employees, agree that government should be downsized and streamlined. However, the proposal of DOD/MTMC to "Reengineer" the shipment of household goods and baggage for military members is not a downsizing and streamlining, but rather, the destruction of established businesses who have performed satisfactorily for the military for many years.

Attached to this memorandum is a letter written by Pioneer to MTMC, dated September 19, 1995. Therein, we point out that the premise of unsatisfactory service by the household goods industry to the military is not true, and we particularly resent such statements. Pioneer has performed satisfactorily in the DOD/MTMC program since 1981, and is presently headquartered in Federal Way, WA. The owner and all of our employees reside in the Federal Way/Auburn/Puyallup area. Our employees have indicated their opposition to the Reengineering program by their signatures below.

The proposed reengineering is a smoke screen to damage small businesses. Of the 152 forwarders in the international household goods programs, we can determine that only one company qualifies as big business. That means there are over 150 small businesses constituting the providers of this program.

We have just returned from a household goods industry meeting in Honolulu. At this convention we talked to two foreign companies, one based in Asia, another based in Europe. Both these foreign companies are preparing to bid directly to ship military household goods. The latter of these companies already has a fulltime

Congressman Randy Tate
October 6, 1995
Page Two

representative in Washington, DC to assist them to bid on this new military program. In addition to the above information, we are advised that United Parcel Service/Europe has hired two former MTMC managers to look into the bidding procedure for military household goods to and from Europe. In other words, to replace the 150 small business providers of this service now, MTMC proposes to throw the entire bidding process open to foreign companies and other third party providers who have absolutely no household goods experience.

We, the undersigned owner and employees of Pioneer will be put out of business by this sort of government action. It is not in the public interest to force out of business small forwarders who are providing a satisfactory and very reasonably priced service to the Federal Government in favor of foreign companies and giant U.S. controlled foreign subsidiaries.

The only purpose of the military in "Reengineering" is to cover up their past mistakes in face of warnings from industry for years that their procedures were outmoded, inefficient, and not being conducted in a commercial manner. Congressman Tate, if you wish to streamline and downsize government and save money, you should vote to end this outrageous expenditure of funds by MTMC at the present time to promote a program that is antithema to the interests of your constituents in this area of Washington.

We can assure you that there will be no Pioneer employees in Federal Way if this proposal is adopted by the military.

Thank you for your consideration of this matter.

PIONEER VAN LINES, INC.

Lorna Stern

LORNA STERN
President

Keri Stern
KERI STERN

Peggy Jones
PEGGY JONES

Sally Graham
SALLY GRAHAM

Kelly Wilson
KELLY WILSON

Jack Stern
JACK STERN

PIONEER VAN LINES, INC.

TEL: (206) 952-3996 (800) 225-2705 FAX [illegible] PIONE

September 19, 1995

COPY

Military Traffic Management Command
ATTN: MTOP-Q
5611 Columbia Pike
Falls Church, VA 22041-5050

Re: Comments on Reengineering Program

Gentlemen:

Your attempt to reeingineer the military household goods and baggage movement program is apparently based on the Report of the National Security Committee, House of Representatives, on HR1530 dated June 1, 1995.

While we disagree with the conclusions therein that "DOD personnel continually receive second-class treatment", we agree that the program could be substantially improved within the framework of the system. We particularly resent the statement that we carriers provide "second-class treatment" continually to DOD personnel. We defy you to check your records on the thousands of shipments that we have handled for the DOD MTMC program since 1981. Military traffic comprises approximately 95% of our business. You are not trying to reengineer a system; you are trying to wreck it.

MTMC has every opportunity in the world to improve various facets of the present program:

1. Use of 800 numbers to facilitate contract. There is no reason that you cannot require the use of 800 numbers by a simple regulation.

2. Direct claim settlement. The industry has been seeking direct claim settlement authority for many years, yet, this has been discouraged by DOD. On the other hand, the Coast Guard has been encouraging direct claim settlements with the members, and this is being accomplished at the present time.

3. Full liability included in the rates. You have already placed into the Federal Regulations the requirement that international shipments be valued at $1.25 per pound per article. We feel that you should be entitled to any value of the shipment that is reasonably necessary, and carriers should include it in their rates. You could easily accomplish this by another amended regulation.

4. Management information. Coupled with the 800 number, a member should be able to ascertain the status of his shipment at any time. Most carriers have a sophisticated computer system to accomplish this result now. Those that do not should be eliminated from the program. The Coast Guard is giving carriers' telephone numbers to many of its members, and we receive telephone calls all the time from mostly Coast Guard members as to the status of their shipments.

5. Direct customer contact and evaluation. Direct customer contact and evaluation has been accomplished by the GSA for many years. GSA uses a simple form for customer satisfaction responses. This form could be easily adapted for military purposes. Further, this form could be the basis for a scoring system such as GSA's.

6. Use of single factor rates. MTMC has single factor rates in the international program, so there is no practical reason why they could not be used in the domestic program. Single factor rates were used in Code 2 domestic shipments some years ago, but their use was cancelled by MTMC. We welcome single factor rates.

7. Traffic saturation. It seems to us that the major problems involving the household goods program are domestic problems. Pioneer is primarily in the Alaska domestic and international programs. We don't hear of any saturations in the Alaska or international programs, except at certain east coast locations, for the delivery into SIT. However, this has not been a major problem in that we have always been able to obtain alternate agents. Please remember that the military causes their own problems when they try to move the majority of their people within a few summer months!

8. Proliferation of carriers. There is no real proliferation of carriers in the international program, with approximately 152 carriers. We would agree that there are too many carriers in the domestic program, but MTMC has brought this on themselves. MTMC tried to attack this problem when Col. Morotta was Director of Personal Property. He had the right idea, but he didn't have the "muscle" to eliminate the forwarders from the domestic program. MTMC could toughen its regulations and strive toward the goal of eliminating paper companies, both forwarders and motor carriers, in the domestic program.

COPY

You should remember that all carriers in the international program are paper carriers, so we fail to see a problem here.

9. Traffic allotment. Your program of traffic allotment is unworkable. Your insistence on the use of F.A.R. displays a lack of knowledge of our industry. The use of independent operators, casual labor, piecemeal workers, etc., precludes any realistic application of F.A.R.

What is feasible is a modification of the M-T rules so that a carrier setting the low rate in domestic traffic gets a certain percentage of the traffic, and the M-T'ers share the balance. This is what is done in international traffic, so what's the problem?

CONCLUSION We have read the text on Reengineering, and we don't think that it means destruction. MTMC has the ability to simplify and improve the existing system, which is largely a creation of MTMC. Please don't destroy an industry, its many companies, and many thousands of employees, because MTMC is unable to correct its system.

Sincerely,

PIONEER VAN LINES, INC.

Lorna Stern

LORNA STERN
President

CREATING A 21ST CENTURY GOVERNMENT

SATURDAY, OCTOBER 7, 1995

U.S. HOUSE OF REPRESENTATIVES,
COMMITTEE ON GOVERNMENT REFORM AND OVERSIGHT,
Long Beach, CA.

The committee met, pursuant to notice, in the City Council Chambers, Long Beach City Hall, 333 West Ocean Avenue, Long Beach, CA, at 10:03 a.m., Hon. William F. Clinger, Jr. (chairman of the committee) presiding.

Present: Representatives Clinger, Horn, Dreier and Schiff.

Staff present: Monty Tripp and Kim Cummings, professional staff members; Judith McCoy, chief clerk; and Denise Wilson, minority professional staff.

Mr. CLINGER. The committee on Government Reform and Oversight will come to order. Good morning, ladies and gentleman. My name is Congressman Clinger, from Pennsylvania, chairman of the committee. We want to thank you all for coming to our fourth hearing on what we call creating a 21st century government.

Before I go any further, I want to thank a very distinguished member of the committee and this area's Congressman, Steve Horn, for hosting us today and for all the work that he and his staff have devoted to prepare for this hearing. Thank you, Steve.

Mr. HORN. If I might say, Bill, I thank you and Steve Schiff, who is vice chairman, for coming. They have a tough job going around the country. I can't make every one of the hearings. I've made all but Seattle yesterday because we had business here. But it's a great pleasure to have you both and the staff of the committee here in Long Beach. Southern California has a very good record in a number of areas, we'll hear some of that this morning, in downsizing.

Mr. Clinger has been designated by the Speaker as the ringmaster within the House of Representatives to coordinate the efforts of the various committees who are looking at agencies of the government, to either make them independent, realign them or downsize them. So we have all profited very much from citizen input and industrial input and government input and labor input, you name it, as we've gone around the country. So we hope to hear the ideas today and the chairman is going to explain how that process works.

Mr. CLINGER. Thank you very much, Steve. This morning we will hear from a number of distinguished witnesses, all with insight and experience in creating a leaner, more efficient, and more effective organization, from businesses or governments that were, frankly, less than mean and lean. Our hope is that we can learn

from these witnesses and then apply those lessons to the ongoing efforts in Washington to ensure that we do have a Federal Government that is ready to serve this Nation today and into the next century.

The efforts that we're going to make at the Federal level go beyond streamlining executive departments and agencies. We are engaged in a radical restructuring of our institutions that will take us into the 21st century. We need to step back from the Federal Government we have today and ask the question that businesses, local and State leaders have been asking of their own organizations—is this organization designed to meet our needs today, in the year 2000, in the next millennium and beyond, or is it left over from the days before microwave ovens and color TV?

It's critical that we refocus government on those essential functions that it must perform and reconsider whether government should be involved in any activity if it cannot do it well. In fact, in our quest to do things better, it often seems that all we have done is make the Federal Government bigger, without necessarily making it more efficient.

In 1985, there were 1,013 Federal domestic assistance programs. Today, there are 1,390 programs administered by 53 agencies. So we've had a continuous growth over the last 20 years. To support these programs and the bureaucracy that runs them, Federal income tax receipts today have grown to an amount 13 times the amount they were in 1960.

The problem in many of our views is that the Federal Government is no longer responsive to the people it is intended to serve. We have all heard or experienced the horror stories of wading through reams of inefficient, unhelpful government red tape. It seems that government today is just too big and is doing too many things to do them all well. It's long overdue for a top-to-bottom renovation.

Our task in this committee is to review the size, scope and functions of the Federal Government. Our goal is to improve government activity where it is necessary, refocus government efforts where they are misdirected, and get government out of activities in which it does not belong, and the only way to reach this goal is with the input and support of the American people. We are, after all, creating their 21st century government. To me, that means a government that is limited and responsive, a government that is the solution to problems rather than the source, a government that can adapt as the needs of its citizens change, and, finally, a government where change is not the dark unknown, but a welcome and constant force that continues to push America toward a promising future.

The witnesses before us today already have met the challenge of preparing their organizations for the future. I think we have much to learn from their experiences and the process by which they arrived at some very difficult decisions. It's my hope that the lessons we learn here will translate in some respects to our efforts to smart-size the Federal Government, so we can benefit from their innovative ideas without having to reinvent the wheel.

So with that, allow me, again, to thank our witnesses, our audience, and my colleagues, who have taken the time to attend this

hearing and to listen to what our witnesses and the people of California have to say. Thank you very much.

Do you have anything further you'd like to say, Congressman Horn?

Mr. SCHIFF. Just let me add that I'm pleased to be here and be in your district, Steve. You've been a great addition to the U.S. Congress and I'm pleased to be visiting your area and meeting your constituents. Thank you.

Mr. CLINGER. As was indicated, Congressman Schiff is the vice chairman of the committee. I would now like to welcome our first panel of distinguished witnesses from local government. The Honorable Doug Drummond has had a distinguished career as the vice mayor of the city of Long Beach and the Honorable Henry Taboada serves as assistant city manager of Long Beach and prior to his current position, he served as deputy city manager. Gentlemen, I welcome you both.

We have a custom in the Government Reform and Oversight Committee to swear all of our witnesses, so as not to prejudice any witness. If you have no objection, I may give you an oath.

[Witnesses sworn.]

Mr. CLINGER. Let the record indicate that the witnesses both indicated they would be in the affirmative. We will include all of your written testimony in the record in full. We try to keep our witnesses to roughly 5 minutes, so please summarize your testimony if that's possible. There's a little green light over there that you can be guided by. We're not going to cut you off, but if we can hold it to 5 minutes, that would be appreciated. Thank you very much, gentlemen. Whoever would like to go.

STATEMENTS OF DOUGLAS DRUMMOND, VICE MAYOR, LONG BEACH, CA; AND HENRY TABOADA, ASSISTANT CITY MANAGER, LONG BEACH, CA

Mr. DRUMMOND. Thank you, Chairman Clinger. Members of the committee, ladies and gentlemen, I'm Doug Drummond, vice mayor of the city of Long Beach, and on behalf of Mayor Beverly O'Neill and members of our City Council, it's my pleasure to welcome you to the city of Long Beach and our Council Chambers.

As a matter of fact, Congressman Horn's assistant, Connie, is over here. Connie, if you will please stand? She has parking validations for those who are here attending, if they so wish. Additionally, I must admit that it's quite strange for me to be sitting here at this table rather than my council seat. I sincerely hope that you have the opportunity to tour our city and see and partake in our many assets.

Let me also extend my thanks and appreciation to Congressman Horn for his efforts to save the Long Beach Naval Shipyard from closure. The Congressman was our point person in Washington on this effort and the city will forever be in your debt for the yeoman's work that you did.

Long Beach is a city of 440,000 people, the fifth largest city in California, the 32nd largest in our Nation. Our economy is going through tremendous changes. Our once dominant oil and aerospace industries have downsized over the recent past and with the closure of the naval station and the pending closure of the Long

Beach Naval Shipyard, we have the end of a long history with the U.S. Navy, an end that we regret to see coming.

However, our new economy will be driven by international trade, tourism, transportation, retail and business services. This economic transition has placed great strains on the city's ability to provide services and maintain our aging infrastructure. As in most urban areas, the demand for public safety services is placing increasing demands on a decreasing city budget.

We have tightened our belt, are improving efficiencies, and, most importantly, prioritizing limiting services and resources. In general, across-the-board cuts have been replaced with a systematic review of every service the city provides. Is the service in high demand? Who can provide it most efficiently, the public sector or the private?

Underlying everything we do is a focus on our customers. We are listening to our residents, the business community, and other agencies we regularly interact with. We are asking what it is they want and expect from their local government. How can we best deliver the service and once re-engineered, are we meeting expectations? Assistant City Manager Henry Taboada will provide you more details regarding three examples of our efforts to meet community needs with shrinking city resources.

Let me, again, welcome you to our city, commend you for your efforts, and applaud your willingness to reach out to State and local governments. Yours is a tremendous task. Thank you.

Mr. CLINGER. Thank you very much, Mr. Drummond. Mr. Taboada.

Mr. TABOADA. Thank you, Vice Mayor Drummond. Mr. Chairman, members of the committee, ladies and gentlemen. First, before I begin my prepared remarks, let me just first indicate that I'm here to welcome you on behalf of City Manager James Hankla, who is out of town and would be here to make this presentation, and, also, on behalf of the city's 5,000 employees who make this city run and run very efficiently.

I would like to applaud the Committee on Government Reform and Oversight on these efforts to include the American people in the process of change in the Federal Government. I thank you, members of the committee, for your leadership in bringing needed change to the Federal Government and for this opportunity to participate.

In Long Beach, we have learned that the first step to successful government reorganization is to develop a better understanding of the needs of those we serve, our customers. Our services, like those provided by the private sector, must be responsive to our customers. We have also learned that our services must be competitive from both a cost and quality perspective.

In just a very few minutes, I will share with you two examples where listening to our customers has had a tremendous impact on how we deliver services and one that demonstrates how we have approached making our services more competitive.

The first example involves the services provided by the Long Beach Police Department. Three years ago, the department faced unprecedented challenges, rapid increases in violent crime, gangs, illegal drug activity, declining staffing levels, and extremely low

morale created the need for major change in that department. The police department initiated an effort to develop a strategic plan to meet these, as well as future challenges. To ensure future plans were built on customer needs, substantial effort was put into obtaining information from customers. Survey questionnaires, in several languages, were placed in all city public libraries, published in two of the city's newspapers, and mailed randomly to selected addresses throughout the city.

A series of public meetings were held throughout the city where participants were encouraged to express their ideas, concerns and complaints, as well as to offer suggestions for positive change. The result of these efforts was a clearer picture of how safe the police department's customers felt, which police services were most important to them, and how they rated the police department's performance and their individual image of the police department.

With this strong understanding of our customers' needs and priorities, the police chief established the future vision for the department and a series of goals and objectives to meet its customer needs. The vision focused on creating a community where people feel safe and where they could work together to solve community and neighborhood problems and to create and maintain a high level of respect, trust and confidence in the police department.

The goals focused on the customers' top priority services—responding quickly to emergencies, reducing gang and drug activity, and solving neighborhood problems. With just over a year of implementation, the plan is having dramatic results. Gang-related violent crime is down 26 percent, with gang-related homicides down 41 percent, and all violent crime is down 13 percent. The police are responding more quickly to all citizen calls for services and drug arrests are up nearly 36 percent.

Perhaps most importantly, customer perspectives of safety, police image and performance have improved. Surveyed customers feel less likely to be crime victims, feel less impacted by illegal gang, drug and prostitution activity, and have a more positive image of the police department and its performance.

The second example involves the process for businesses to obtain the necessary licenses and permits to operate in our city. After receiving numerous complaints about our process, we met with groups of customers to identify their issues. The key problem identified was that there was no single point of contact within the city. Business owners and representatives would often have to complete multiple and redundant forms, undergo multiple inspections, often with inconsistent interpretations, and write multiple checks to various city departments. We took this information, evaluated it and completely redesigned our process.

The driving principle behind this redesign was viewing the process from the customers' perspective rather than our own organizational view. By viewing the customers' process from their point of view, city staff were able to rethink the approach based on its overall purpose, eliminate steps that did not contribute, combine steps common to different departments, and focus on customer-oriented approaches, thus making it pleasant and easy to do business with the city.

As a result of implementing this redesign, we have been able to reduce the average time it takes to obtain a business license from nearly 3 weeks to less than 2 days.

Another important lesson we have learned in Long Beach is that government services must be competitive both in terms of cost and quality. Like most local governments in southern California, Long Beach is feeling intense budgetary pressure. Demand for city services is increasing, while revenues available to pay for these services are decreasing. We have to learn literally to do more with less.

To accomplish this, we have established a service assessment process to examine every service the city provides. We are looking for opportunities to eliminate, consolidate, re-engineer, right-size or down-size, contract our services, or expand and contract in services. The first step in this process is determining that the service being examined is competitive with other means of providing that service. If the answer is no, we look for ways we can change or re-engineer how we provide that service to make it competitive.

We have successfully re-engineered several operations, including tree trimming, our materials testing lab and our clerical pool.

In conclusion, two key lessons for government, whether the local, State or Federal level, are that success requires government services to be focused on customer needs and priorities and that they must remain competitive in terms of cost and quality. Thank you very much.

Mr. CLINGER. Thank you very much. Thank you both very much. I'm going to turn to Congressman Horn for the first round of questioning.

Mr. HORN. Thank you, Mr. Chairman. As you know, one of the things we're grappling with, and Chairman Clinger has taken the lead in it, is the unfunded mandate situation, where the Federal Government has imposed mandates on the State and other lesser forms of government under the rules of the State, and the State, of course, has imposed unfunded mandates on counties and cities.

Now, as we craft the legislation to devolve power out of Washington and with it the programmatic money, let's say, in worker retraining, we just had a bill before us that tried to consolidate 150 different programs into 4 or 5. What's your advice to this committee and to Congress as to how we should limit the State as to how much money it takes off the top if the money needs to flow through to the counties and the cities, special districts, depending on the situation, so they can implement the programs?

Should we put a cap of 1 percent, 5 percent, 10 percent? I realize that could vary with program and the State role, but we want to make sure the money gets down to where the action is. What's your advice on that?

Mr. TABOADA. Congressman Horn, members of the committee. I think there is no arbitrary number that you could assign or a percentage that could be assigned to how much overhead there is associated with the trickle-down of Federal funds to the local level.

What I think really needs to happen is that there is a reduction in the documentation that's required to validate where every nickel and dime is spent, because that validation process uses up an enormous amount of resources and the paperwork that's required to

satisfy every Federal grant, every State and county grant is enormous.

If we could somehow simplify the processes so that we can account for it and maintain yours and our fiduciary responsibility for the safekeeping of those funds, that ought to be sufficient, if we can agree on a system that works well for all levels of government. That, I think, is where a good part of the money gets eaten up is in that reporting and recordkeeping that just, as I say, consumes a good part of the resource.

Mr. HORN. Would you then leave the follow-up to simply the post-audit of the particular program to see if it had carried out the intent that was promised under it, as well as the fiscal responsibility? Do you just simply handle it on a post-audit rather than individual documentation prior to that?

Mr. TABOADA. Well, first of all, the application itself for the grant or for the program funding requires a lot of information up front and that satisfies, I think, a good part of the recordkeeping requirement. So your point about a post-audit is very valid.

The one caveat to that is that post-audits sometimes will determine that there may not have been the exact use of the money that was ordained. It may be a very useful use of those funds, but that it doesn't fit the box and, therefore, you might subject yourself to having to repay moneys used for worthy purposes, even though they were not the same exact purposes ordained in the legislation.

So as long as there is some flexibility in that post-audit review, so that as long as there's a reasonable explanation as to how the funds were utilized, then I believe that a post-audit is, in fact, a way to go.

Mr. HORN. Obviously, under revenue-sharing, which lasted from 1973 to 1983 and, regretfully, was ended, the cities and the counties had great freedom to implement those funds and put them to some appropriate use. Would you say, in the drafting of the legislation, as we move programs out of Washington to the 50 States, that we ought to force simplification of the types of paper you're talking about for the cities and counties to access those fundings? And, if so, do you have any great ideas on how we simplify it, other than say limit it maybe to 1 or 2 pages, not the 100 and 500 pages that are sometimes required now?

Mr. TABOADA. Congressman Horn, the revenue-sharing model is one that we all regretted losing and it's one that I think doesn't need to be reinvented. I think it's there to be used and used very effectively. So I would recommend that we go back to that type of program approach, because it did work for this city, cities throughout the Nation. When that program—and I'm not aware of any misuse of funds as a result of that program. I don't recall ever having seen an audit that resulted in anyone having to pay back any moneys because they were misappropriated or improperly used.

I think the cities and counties acted very responsibly under that program. In fact, what it did was it was discretionary funding that enabled us to fill in the valleys between other programs that are more rigid; that is, the categorical grants. So we used that money to fill in the gaps and to more or less fill in where other moneys were not available, and that flexibility was tremendously important.

Mr. HORN. Well, I thank you both for your testimony. It's been excellent and I agree with you completely on the need to simplify it, hold people accountable for the broad approach of a particular grant, but end all the paperwork that requires you hiring extra people constantly instead of getting the money out to the program where you want to accomplish something.

Thank you, Mr. Chairman.

Mr. CLINGER. I'm pleased to recognize the gentleman from New Mexico, Mr. Schiff, for 5 minutes.

Mr. SCHIFF. Thank you, Mr. Chairman. Thank you, gentlemen. Mr. Taboada, I'd like to ask you about the description of the examination of police services that you just described to us. When did this take place that you did this community inspection and review of police services?

Mr. TABOADA. Congressman, we undertook that program approximately 2 years ago and we set out to develop a strategic plan that would take the police department into the next century. One of the things that we struggle with is there is a perception in our communities that crime is rampant and that the public is unsafe. There is also a perception, even within our own organizational structure, that we know best how to deliver police services.

The approach that we took in this particular undertaking was to, first of all, identify customer needs. We were amazed to find that there were areas in which we agreed and areas in which we disagreed. One of the misperceptions, I think, is that the public believes that more police officers will decrease crime, and that, in fact, is correct, to some degree, but what we also found out was that customers were much more concerned about response time. So we've concentrated our energies on reducing response time to those calls for service and as a result of that, our crime statistics have gone down dramatically.

We attribute it somewhat to the increase in police numbers, numbers of police on the street, yes, we do that, but we think that the response time is what has been the critical factor. We think that that approach of going to the citizenry and asking them what they think was the all important point of that process, because without asking them, we would have made different assumptions. Now that we have a better understanding of what the public really wants, we're better able to provide that service.

Mr. SCHIFF. But as you know, crime statistics go up and down for a variety of reasons. So the key question here is when you say that Long Beach's crime has gone down, how has it fared in comparison to your surrounding communities?

Mr. DRUMMOND. Congressman Schiff, we have done very, very well. We had allowed our department to decline for many years. It reached the point whereby we had about 630 police offers serving 440,000 people. Of the 630, 80 were off on disability leave. So we had 550 working the street.

Today, suddenly, we're up to about 830, with 30 off on disability leave. So effective working officers went from 550 to 800. The decline in criminal activity, as you see, 41 percent in homicide alone for a decline, other repercussions have also been felt in the community. Our graffiti is almost gone. We have a good handle on the gang activities.

And it isn't all police. There are other events taking place at the same time. We have good community involvement. We have a strengthened neighborhood watch. We're doing more with the youth in terms of directed activities, whether they be educational or they be recreational. It's become more of a community endeavor, but all together, it could not be done without that reduced police response time. That's been very effective.

Our surrounding cities have not seen the same effect. I believe that as the trend of the last 10 years has gone on, they have done a better job than Long Beach. I also do not believe that we have moved crime to the neighboring communities. We seem to have grabbed a hold of it and we're suppressing it. It's doing well.

Mr. SCHIFF. I thank you very much for that further explanation. The only thing I would add is a respectful suggestion. Everybody is trying to get a handle on crime. It's a nationwide problem. Nobody is immune from it. You know that very well. In Albuquerque, NM, there's a lot that I think we could do better. For example, in our State, we are one of the most liberal in the country in terms of good time release, up to 50 percent off any sentence, including murder. I think that's outrageous and have been unable to change it.

However, in Albuquerque, we have been experimenting. I think we should do more with police service aides. In other words, there's a lot of police services, from recording auto accidents to just some just patrols, that really don't need the level of training and, therefore, the compensation level of a fully qualified police officer. In other words, the police service aides can augment a police department and, of course, they're often made up of young individuals who want to see if this is a career they like. Many public service aides have gone into full-fledged police work.

Like I say, we've gone up and down on that in Albuquerque, and I don't know if you're doing it, but I think that's an idea that's worth looking at.

Mr. DRUMMOND. Congressman, I certainly agree with you and that's one thing that our city has been very progressive about. Over the last 20 years, our police department changed rapidly, adopting more and more civilianization in different areas. It was the basic line service that had been neglected and now we've done a great job catching up.

Mr. SCHIFF. Thank you very much, Mr. Drummond. Thank you, Mr. Chairman.

Mr. CLINGER. Thank you, Mr. Schiff. Gentlemen, you heard Congressman Horn talk about the unfunded mandates effort and that was really in response to what we had heard from all over the country, from State and local elected officials, decrying the fact that they have been mandated to do more and more things with less and less resources to do them with and that the Federal Government has accelerated the rate at which it micro-manages the affairs of State and local governments over the years.

One or two are not so bad, like barnacles on a ship. I mean, one or two aren't going to sink it, but 10,000 barnacles may sink it, and I think that has been what we have failed to recognize. Over the years, with the accretion of mandates that have been laid upon local governments, it's become an almost intolerable burden.

What we have done, and I'm sure you're aware of it, is basically indicated that the Federal Government can no longer impose upon States and local governments mandates without providing the resources with which to conduct those mandates or at least having an up or down vote in the Congress, saying we're going to pass it through, even though we're not going to provide the resources, because we think it's so very important, the benefit is so great and we need to do that, but it would require an up or down vote.

It is, unfortunately, only prospective. It will not look back to existing mandates. We do have a provision in there that directs a commission to look at the mandates that are on the books now and determine which ones are redundant, which ones could be done away with and so forth. But I just wanted to get a sense from you at the local government level as to the extent of that burden, some rough idea of the amount of your resources that you have to expend to comply with Federal mandates that are laid upon you.

The one we hear most about as we travel around the country is the motor voter provisions, which are going to be imposing some burden. But could you just expand a little bit on what this might mean to you?

Mr. TABOADA. Mr. Chairman, members of the committee. One thing I think that all levels of government can agree on is that a service, once provided, is almost impossible to eliminate. So the added burden of unfunded mandates on top of that really does stretch our resources to the breaking point. If there is prospective legislation, that certainly would be welcome because we have somehow managed to cope with those unfunded mandates that we currently are, I would say, saddled with.

But having received those mandates and having those services provided, as I indicated, they are almost impossible to eliminate. That is why governments at the local level and why city councils struggle to maintain the current level of service. What we're faced with as a result of that is that we either, one, eliminate the service and lay off city employees and no longer provide the service or, in the alternative, our service assessment program, which is a euphemism for contracting out, is that we now look for more competitive private sector delivery of some services where we can get a better bang for the buck.

So that's what we're having to resort to is downsizing the size of the city government, the local government, and, at the same time, maintaining service level by using these techniques, such as downsizing, right-sizing, re-engineering, et cetera. We somehow have been able to cope with that up to this point, but I can tell you almost without exception, in the southern California region, that local government budgets have reached the breaking point. There is no slack left for any future unfunded mandates from any level because that really will be the straw that breaks the camel's back. We can maintain what we have, but we can't take on anything else.

We are also very mindful of the categorical grants that we compete for and absolutely are just intrigued by. As an example, the grants that are now available for increased law enforcement, we are more or less seduced into accepting those funds because it's absolutely necessary for us to get that handle on crime and that's how we've been able to increase our level of police services.

Mr. CLINGER. But they come with a price, don't they?

Mr. TABOADA. But the price tag is we don't know how we're going to pay for those 2 and 3 years down the road. We feel absolutely helpless about how we're going to do that at this moment in time because we will be mandated to continue those services. The public will expect that we will continue those services and we will have to somehow either cut out everything else that supports the infrastructure of the city and only have public safety and no other service or some relief has to come from somewhere.

We're hopeful that future legislation will address that issue, because otherwise you're going to see counties and cities going broke, declaring bankruptcy, and that's a tragedy.

Mr. CLINGER. Yes.

Mr. DRUMMOND. Mr. Chairman, if I might add to that. I feel very strongly that our opportunities for the future lie in that ability to recognize our inefficiencies. Right now, for example, I would like to really urge, when you look at this and I realize it's a huge, huge responsibility and a slight change of focus, but if we were to look at our Federal system again, the Federal responsibilities, the State, the county, the city, because right now we have tremendous overlapping services and duplications of service.

If we can streamline and get after that, I believe that we can find the money to perhaps do what we want to do more efficiently. But certainly the matter is getting the service or the infrastructure dealt with at the local level. Our trouble is that we're overburdened with this huge bureaucracy that has to eat up so many resources on the way.

Mr. CLINGER. I couldn't agree with you more. I think that for whatever reason, we have tended to assume into Washington, DC, more and more authority, more and more jurisdiction over more and more things, and that the relationship now between Federal, State and local governments is one of a guardian to a ward. In other words, we want to tell you what to do, how to do it, but don't give you the money to do it with.

I think that the intention, I'm sure, of the founding fathers was never to have that kind of relationship. It was to be a partnership with Federal Government doing those things which the Federal Government, by rights, should be doing, but no more, State governments doing what they should be doing and local governments doing what they should be doing, in a partnership, and that's obviously what we're hoping to move toward in this restructuring, to really redefine the Federal system and get it more back into a partnership in this regard.

I think there is enormous cynicism about government at all levels and we certainly have felt that as we've gone around the country. We've held hearings in Cleveland and in New Jersey and yesterday in Seattle, and we're going to Mr. Schiff's district tomorrow, we're going to be in Charlotte later on. So we're really getting, I think, some good testimony.

But there's a great deal of cynicism and distrust of government at all levels and I think part of the reason is because Washington is seen as being this monolithic structure that people don't really relate to and don't feel that they can impact in any way, and,

therefore, there is this cynicism, and I think there's also cynicism at the local elected officials.

I guess my question to you would be—we're talking about moving to block grants for some Federal programs. Some would say, well, don't give us the block grants, you know, just give us the way to raise our own money, do our own thing, and it shouldn't have to come from Washington, we should be able to do it here. But if we go to the block grant approach, should we focus on formulas that would distribute the money to the States for further redistribution to the localities or, to the extent possible, should we attempt to structure the program so that basically it went right to the local level?

I think I know what your answer will be.

Mr. DRUMMOND. I want to respond, as well. This is very, very intriguing.

Mr. TABOADA. Mr. Chairman, I want to piggy-back the vice mayor on his statements and also segue from what you've just said. The point I wanted to make is that generally, from the Federal level, one size fits all. Here in the State of California, we have huge urban counties, with tremendous population bases, where the county and city services, as the vice mayor indicated, would tend to overlap.

We have counties in the northern part of California that are so rural that they don't even have a city within their geographic boundaries. There's also the differences between urbanized and rural States. But the rules and regulations that generally come from the Federal Government are routinely and uniformly applied equally across the board. So even if you go to block grants—and your question was how would you structure block grants.

The mere fact that they're to be utilized by such a diverse group of governments means that no one gets satisfaction because it's a compromise at some point. You're compromising size or density, for lack of density, or huge numbers versus small numbers. In that regard, the flexibility just disappears all together.

So whether they're categorical grants or if they're block grants or if they're even revenue-sharing type of arrangements, the greater the degree of freedom for that entity, whether it's the State, county or the city, to be able to determine its own destiny is all important, because without that, as I said earlier on, all we'll be doing is filling in the blocks on the forms and not really accomplishing what the Federal Government or what your body, in passing that legislation, intended.

Mr. CLINGER. I think the tension is how can we do that and still have accountability, because there has to be accountability somewhere. We have to find a balance there in terms of giving localities the flexibility to do what they need to do while still maintaining some measure of accountability back to the Federal Government.

I am delighted to welcome—we have been joined by Congressman David Dreier, a California Congressman and a very distinguished Member of the House of Representatives and of the all powerful Rules Committee of the House of Representatives. David, welcome. Would you like to comment or ask some questions?

Mr. DREIER. Thank you very much, Mr. Chairman. Let me say, first of all, it's a privilege for me to be here with my friend, Steve

Horn. I'd also like to welcome Chairman Clinger and Mr. Schiff to California and to apologize for my arriving late and leaving early. I've just left the San Dimas Western Days Parade, which was a big event up in the area I represent in the San Gabriel Valley, and I've got a luncheon meeting up north. But I did want to come by because this is an extraordinarily important issue.

I don't want to interrupt this testimony and the questions that are going on here, but I have some remarks that I would like to make after this panel, if that would be all right with you, Mr. Chairman.

Mr. CLINGER. Very good.

Mr. SCHIFF. Mr. Chairman, I wonder if I could have just 1 more minute.

Mr. CLINGER. Of course.

Mr. SCHIFF. Thank you. Since we did spend a fair amount of time talking about law enforcement and public safety and since, obviously, we have now come to California, we have just come from the State of Washington and there was much discussion of their three strikes and you're out law, and it's been pointed out that there are different three strikes and you're out laws.

We passed one in New Mexico that will never be used and the legislature knew that. They passed a law that says to get strike one, you must murder two clergymen on Tuesday night when the moon is full. What I want to say is—and I wrote the three strikes and you're out provision that's in the current Federal bill. I wanted to write a much tougher one, but I couldn't. It just was not possible at that time to get enough support for it.

But what I want to say is I'm well aware that there is a controversy in your State about the fact that the State of California has passed what may be probably the broadest three strikes and you're out bill. I believe, if I understand it correctly, it's three felonies, period.

I want to point out, of course, that in all three strikes and you're out bills, we are not talking about three felonies committed an hour apart. We are talking about a felony, going through the system, being convicted, being sentenced, and doing it again, and so forth.

I'm well aware that your bill is very controversial, since it's all three felonies, including non-violent felonies. I wanted to say that as a former career prosecutor, but also as a defense lawyer, you wrote the right bill and I think it ought to be taken as a model for the country. This, by no means, is a belief on my part that every person convicted of every offense ought to go to prison. I don't believe that at all. I believe that there ought to be an alternative sentencing available in many cases.

But I want to stress that what we're talking about is the career criminal. We're talking about the person who essentially may have been caught three times, but isn't committing just three crimes. I don't think the law of averages works that way. I think that they are stealing everything that isn't nailed down.

I'm willing to argue the point just on the economics. The totally non-violent criminal will steal more from us each year than the broadest highest possible cost of incarceration and, therefore, it's a net savings to get these people off the street. That doesn't count several other factors. It doesn't count the economics of re-arrest, re-

prosecution, security. It doesn't count the non-economic factors, the fact that non-violent criminals can get violent real fast in many cases, if they're pushed to it, or just a human heartache of losing your precious valuables.

So I say, with due respect, that I think California should stick to its guns on that and I hope other States and the Federal Government will follow you. Thank you, Mr. Chairman.

Mr. DRUMMOND. Congressman Schiff, if I might reply. You came from the prosecution arm of our criminal justice system, I came from the police arm. I couldn't agree with you more wholeheartedly. I am really convinced that that is a fact and when I think of it, I have to mention that we are not talking about a misdemeanor or an infraction that people can do by mistake.

Mr. SCHIFF. Or just one or two.

Mr. DRUMMOND. Right. We're talking about three. And when I think about people who go through their whole lives without ever committing a felony, the great majority, and then I look at this, three convictions, different offenses.

Mr. SCHIFF. I assume, Mr. Drummond, since you have a police background, that you've seen the rap sheets that go on page after page after page.

Mr. DRUMMOND. Absolutely.

Mr. SCHIFF. And the system is dealing with the same person over and over again.

Mr. DRUMMOND. Absolutely. And I'm always reminded, too, of a quotation that goes something like this—"Those who treat the cruel kindly inevitably treat the kind cruelly." I think that says it all.

Mr. CLINGER. Any further questions, Mr. Horn?

Mr. HORN. I just have one, and that is in critically looking at your operations and making a determination of what your services—how you can improve the delivery of your services, has privatization entered into this? Have you looked at areas where that might be a solution or might be a way to downsize?

Mr. TABOADA. Mr. Chairman, members of the committee. Absolutely. We have looked at every possible opportunity to contract out city services, particularly when we can demonstrate that they can be provided at least cost and maintain the quality that the public is used to. We continue to look for those opportunities, but we also look two ways. We look to contract out and, as I say, we have a variety of those kinds of programs in place already. We also look, because we're a larger city, to provide services to smaller cities on a contract basis, contracting in.

For instance, we provide fire protection service for the city of Signal Hill, which is totally surrounded by Long Beach. We provide animal control to Signal Hill and Cerritos. We will take every opportunity to either provide service or to contract out service.

The difficulty there is, of course, that we have career employees in our system who were hired with the idea in mind that they had a career and a future with the city of Long Beach. So we also have to be mindful of those kinds of commitments that we have made. So we also are very cognizant of our need to provide other opportunities for those individuals to either continue employment in other positions within the city or to retrain them for other positions in

outside industry or to even have them be part of the contract, if we contract out.

That's the other side of the equation for local government.

Mr. CLINGER. Yes.

Mr. DRUMMOND. If I might make one more addition to my testimony here. I really appreciate the fact that you have so many difficult problems facing you and I understand, too, that you have to take into consideration, when you're looking at grants or assistance to the local level, whether it might be climatic differences and differences in economy, meaning agricultural and mining and manufacturing and so forth, all of those things.

I urge you to be very careful, though, on pass-throughs, grants through States to the local level, not only to target them to the local level, to reach to the bottom without them being stripped off, but as well to consider the per capita aspects that are also important. I particularly look right now at what I predict to be future problems if that isn't considered in just welfare, for one, that how can we have discrepancies in assistance from State to State.

The second thing that I want to point out is that immigration has become such a tremendous burden in southern California alone. When you look at two-thirds of childbirths in county hospitals as being from illegal immigrants and then you look at 20 percent of our jail population in Los Angeles County as being illegal immigrants I really have to urge that however we deal with this problem, I truly believe that persons who are foreign-born have either been permitted into this country by the Federal Government legally or they have been permitted by the Federal Government to enter by omission.

I really believe it should be a Federal responsibility. It's an incredible burden on our southern California area. [Applause.]

Mr. CLINGER. Yes. I sense that there is a great deal of support for that position. Congressman Horn.

Mr. HORN. Well, I completely agree with the gentleman. As you know, we have had a problem since the mid-70's and until recently, the executive branch has done zilch. Until the 103d Congress, the legislature wasn't much help either, but we did authorize 6,000 additional border patrol officers. Those are now being recruited, trained, deployed, and I think that's a start. But your point is well taken and the Federal Government—I'm glad to see the President did make that decision, where the Federal Government should be reimbursing the affected areas that have had their resources absolutely stretched, as the county hospital-clinic system in this area.

That is long overdue and they should be treated exactly as the refugee situation was treated and the delegation, on a bipartisan basis, has gone to ask for those funds. The problem is there just haven't been enough of them and we definitely need to do more.

Mr. CLINGER. Congressman Dreier.

Mr. DREIER. If the gentleman would yield on that point. I congratulate Mr. Horn for his remarks and I'd like to expand on that just briefly. As Steve said, the 104th Congress has, for the first time, stepped up to the plate and gotten the Federal Government to do exactly what you have said, acknowledge its responsibility. And let me tell you how it's been done, in addition to the call for an additional 6,000 officers.

You know that the issue that you have just raised of 1 in 5 prisoners incarcerated in the State being illegal, we have found that of the six prison bills, and Mr. Schiff was very, very heavily involved in this legislation, that came forward, it was essential for us to look toward reimbursement to the States for the costs of incarceration. There was an amendment that our California colleague, Mr. Gallegly, working with Mr. McCollum, successfully got into the legislation, which calls for the reimbursement.

In the authorization bill, we had $650 million. When it came to the appropriations process, it was slightly less than that. But California will be the greatest beneficiary in that we will see the Federal Government reimbursing the State, which has incurred those costs for incarceration, probably to the tune of between $350 and $400 million. So I believe, again, it's a very good and positive step in the direction of acknowledging the exact problem that you've raised.

Mr. HORN. Could I just add a comment?

Mr. CLINGER. Certainly.

Mr. HORN. A one-sentence addition to that is we did encourage, because under the rules of comedy between legislative and executive branch, we can't demand it, but we encouraged in the legislation that the President renegotiate the prisoner treaties with the 49 source countries of illegal immigration, on our northern border, southern border, east, west, so forth.

That is essential so that if convicted in a court in this country, State or Federal, we can send the people back there to be assured a term in their prison and not our prisons, because right now, as was mentioned, the estimated costs in the State of California are $375 million a year, by the Governor and his staff, are spent on housing illegal aliens in the State prison system. That needs to be reversed.

Mr. CLINGER. Mr. Drummond, Mr. Taboada, we really thank you very much for your participation today and for your very helpful testimony. Thank you for being with us.

Mr. DRUMMOND. Chairman Clinger, thank you for honoring us by being in Long Beach.

Mr. CLINGER. Thank you. I am now pleased to recognize the gentleman from California, Mr. Dreier.

Mr. DREIER. Thank you very much, Mr. Chairman. Let me, again, express my appreciation to this extraordinarily important committee for holding this meeting here in Long Beach and, again, I'd like to acknowledge the superb leadership that Steve Horn has shown to this community and to our entire State delegation.

Mr. Chairman, as you know, I have dabbled a bit myself in the issue of organizational reform and in 1993, as you know, I served as a co-chairman of what was known as the Joint Committee on the Organization of Congress, which looked at the entire question of an overhaul of the institution. As you well know, many of the organizational reforms which we put into place in January of this year emanated first from our Joint Committee on the Organization of Congress. Those are reforms which sought to make the House of Representatives more effective and accountable and responsive to the needs and, quite frankly, based on the early assessments

that we have received, the organizational reforms have been received extraordinarily well and we've gotten a positive response.

But, of course, there is much, much more that needs to be done and I am hoping that the work of the Government Reform and Oversight Committee and the information that comes forward from the testimony here today will be able to play a role in our bringing about further organizational reforms within the Congress.

With respect to the broader overall issue of government restructuring, I was very privileged to have had a professor who is now greatly quoted by the Speaker of the House, when I attended Claremont Graduate School, called Peter Drucker. Professor Drucker, in responding to President Johnson's Executive order that said that all government agencies adopt program reviews to weed out obsolete and unproductive work, Professor Drucker said, "This is a good first step and badly needed, but it will not produce results as long as we maintain the traditional assumption that all programs last forever unless proven to have outlived their usefulness. The assumption should rather be that all programs outlive their usefulness fast and should be scrapped unless proven productive and necessary. Otherwise, modern government, while increasingly smothering society under rules, regulations and forms, will itself be smothered in its own fat."

I think that Professor Drucker has been a great visionary in looking at that and it's very clear that there are thousands and thousands of government programs and agencies that have outlived their usefulness. I think that's really the thrust of why we're here today and the work of this important committee.

In fact, the whole structure of the Federal Government, from my perspective, is outdated, leading to suffocating bureaucracy and poor delivery of services to people who desperately need them.

One of the 1993 reports of the National Performance Review, entitled "Transforming Organizational Structures," laid out what I consider to be an excellent model for transforming the Federal Government. The report noted that there are over 34,000 Federal field, district and regional offices spread throughout the United States and this structure was developed in the 1930's to facilitate popular acceptance of new deal legislation, mostly unchanged since then. That was what the report stated.

It goes on to say the field structure does not reflect substantial changes in government services rendered, consumer services demanded, and modern technology. I would say that the failure of part of the reinventing government package was not in recognizing problems, but in developing effective strategies for change and taking the necessary actions to carry out that change. Unfortunately, there's really been no streamlining of the field structures and no attempt to weed out programs and agencies that serve no useful purpose.

One of the areas where I have been personally involved for a number of years has been the U.S. Small Business Administration. According to a General Accounting Office study that was conducted in 1992, they said there has been no recent assessment of what sector of small business, if any, would receive financial assistance if SBA did not exist, nor has there been a recent assessment of the

economic impact that has resulted from billions of dollars in Federal guarantees that SBA has provided to small businesses.

The reason that GAO's assessment of the SBA is so negative is that the agency's mission statement is, I believe, very faulty. In 1985, when the Budget Director, then Budget Director David Stockman, called the SBA "a billion dollar waste and a rat hole," here we are a decade later and the agency has undergone numerous reorganizations and credit reforms that have brought down default rates and improved the operations of credit programs.

But, unfortunately, the agency is still a failure because of the faulty premise that government can create private sector jobs. Even if the government could create private sector jobs, the SBA's programs are, from my perspective, inconsistent with that mission.

Now, you know, Mr. Chairman, very well that we are approaching the dawn of the millennium, what is clearly an era of tremendous technological progress and highly developed economic and social infrastructures, yet the Federal Government is mired in an organizational structure designed to address the economic and social problems that existed during the 1930's. That's why I believe sincerely that the work of the Government Reform and Oversight Committee is so important and the success of this effort depends on how well we utilize the strategies and expertise of those in other government institutions and the private sector that have managed organizational change.

California has been on the cutting edge of so many issues and as we look at the issue of reform of the Federal Government, I believe that the input that we are getting here today and that your committee will continue to get from a wide range of governmental entities which have been on the cutting edge of many of these societal problems will help as we do charge toward that millennium.

I, again, thank you very much for being here and would like to say that I know we all pat each other on the back quite a bit, but there are no Members of Congress for whom I have higher regard than Bill Clinger and Steve Horn and Steve Schiff, and I would like to say what a privilege it is for me to have the opportunity to serve with them.

Thank you very much, Mr. Chairman.

Mr. CLINGER. Thank you very much, David, for a very thoughtful presentation. Also, I do want to commend you for the outstanding leadership you have shown in reorganizing the Congress, because you spent hours, days, and weeks taking testimony from our colleagues and from others on how we could reform, make the legislative branch work better and cost less. It was really sort of a harbinger of what we're trying to do now with the executive branch, but it was extraordinarily important work that you did.

In fact, one of your colleagues, Jennifer Dunn, was with us yesterday and she was part of that effort under your leadership. So we thank you for that and thank you for being here today.

I am now pleased to introduce our next panel of witnesses, if they may come forward as I am introducing you. Michael Stoker was named the 1993 Most Valuable Official in County Government in America by Governing Magazine and in June 1995, Mr. Stoker was appointed by Governor Pete Wilson as chairman of the California Agricultural Labor Relations Board. He is also a former staff

member of the Subcommittee on Government Management, Information, and Technology and we're delighted that he is here. Chairman Horn of that subcommittee has been doing an outstanding job, with your former assistance in that regard. So we're delighted to have you.

Richard Terzian currently serves as an appointee of Governor Wilson as chair of the Commission on California State Government Organization and Economy, commonly known as the Little Hoover Commission. Mr. Terzian is a partner in the Los Angeles Office of LeBuff, Lamb, Green & McCray. Welcome, Mr. Terzian.

Finally, Fred Silva, the executive secretary of the California Constitution Commission, has had a distinguished career in the public sector, serving as chief fiscal policy advisor to the Speaker Pro Tempore of the California Senate and working as a principal consultant for the Senate Local Government Committee.

Gentlemen, I welcome you all. As you may have heard me state, it is the custom of this committee to swear all our witnesses so that we don't prejudice any witness. If you have no objection, I will deliver the oath.

[Witnesses sworn.]

Mr. CLINGER. Thank you. Let the record indicate that the witnesses answered in the affirmative. Again, we welcome you, gentlemen. Your written testimony will be included in full in the record. If you can summarize, fine. If not, we have a rough time limit of 5 minutes, but don't feel duty-bound to that. But we are delighted to have you and I guess would you lead off?

STATEMENTS OF MICHAEL STOKER, CHAIRMAN, CALIFORNIA AGRICULTURAL LABOR RELATIONS BOARD; RICHARD TERZIAN, CHAIRMAN, COMMISSION ON CALIFORNIA STATE GOVERNMENT ORGANIZATION AND ECONOMY, THE LITTLE HOOVER COMMISSION; AND, FRED SILVA, EXECUTIVE SECRETARY, CALIFORNIA CONSTITUTION REVISION COMMISSION

Mr. STOKER. Thank you, Mr. Chair. First of all, I am chairman of the Agricultural Labor Relations Board. The record should reflect I am not here today speaking on behalf of the board, but rather in my individual capacity, primarily from my experience as a county supervisor in Santa Barbara County.

With that having been said, Mr. Chairman, I want to personally thank you, the full committee and your staff for the responsibility you have assumed in evaluating and eventually recommending ways to successfully downsize and restructure government. Anyone who has followed the full committee and, in particular, the Subcommittee on Government Management, Information, and Technology, knows you have accepted one of the more significant tasks before this Congress and your staff, which is one of the finest on Capitol Hill, has responded in a remarkable way.

This having been said, let me turn to the issue at hand—success stories of reorganization. As a county supervisor, I had to deal directly with the need to reorganize in order for our county to financially survive. From 1991 to 1994, the California State Legislature permanently transferred $6 billion from local government to the State treasury in order to balance the State budget.

The way the State met their fiscal demands at the time, by stealing from Peter to pay Paul, is not a success story. The way many of the counties and cities in the State responded is. In Santa Barbara County, our proportion of the $6 billion Statewide transfer was $16 million lost annually. This, in addition to the $20 million deficit projected at the start of 1991, represented a potential $36 million shortfall. To respond, we embarked upon a significant effort to downsize, consolidate, streamline or eliminate. The goal I articulated to drive the plan was the premise that any consolidation which would realize a net county savings and nominally impact the level of basic services should be the starting point of the reorganization plan.

As a result, 38 departments were consolidated into less than 24. All departments serving internal county functions were consolidated into one general services department. External non-regulatory environmental agencies were merged into public works. All environmental regulatory agencies were consolidated into environmental health. Fire and sheriff services were combined into one agency, the first county to do so in the Nation, with the county sheriff and the fire chief becoming the same individual.

Ironically, one consolidation I had recommended which would have realized the greatest gains was not approved due to extraneous political pressures. This was a proposal to merge health care, social services and mental health into one family services department. Significantly, the consolidation would have saved money and realized better constituent service. But as the other consolidation plans took hold and generated the savings necessary to balance the budget, the political will to reorganize gave way to traditional political pressures.

The moral of this story for Congress is simply pursue all restructuring options as part of a balanced budget plan, as it will be even more difficult to pursue the same restructuring options on its individual merits.

From our experience, I would like to share some observations and potential recommendations with you. First, I strongly recommend that the goal should be to provide any given service through one level of government, and I think you heard some of the representatives today from Long Beach attest to that fact. Locally, our reorganization plan eliminated any duplication of service between county agencies. This assured better constituent service by one agency providing the service and, additionally, generated significant savings, allowing our county to eliminate the potential $36 million shortfall and deliver a balanced budget.

While this concept of consolidation may seem obvious, the fact remains that we often provide the same services in different ways through service levels of government. For instance, with the environment, we find Federal EPA and the State CAL–EPA and to implement Federal mandates, almost all counties maintain several departments to respond to environmental responsibilities.

In housing, we have HUD, California has the Department of Housing and Community Development, and most counties have housing authorities and redevelopment agencies. In law and justice, we have county jails, State prisons and Federal penitentiaries. Needless to say, I could go on and on with numerous examples.

The point is at each level, we are spending millions at the local level and billions at the State and Federal levels in administrative costs alone. Consequently, to properly assess reorganization and realize the maximum efficiencies, it is essential at some point to make the assessment by analyzing all three levels of government collectively and how each interfaces with the other and determine which one level of government is best able to provide the service.

With this in mind, I would suggest groups like NACO, the National Association of Counties, and the League of Cities would welcome the opportunity to work on these kind of issues with the Congress.

Second, provide local government greater flexibility in implementing Federal mandates. The success story I have described in Santa Barbara County was realized solely in areas of which we had discretion. Where Federal mandates dictated service levels, eligibility requirements and, most importantly, the process to be applied in providing the service, the result was and continues to be ongoing inefficiency and a waste of taxpayer dollars.

To illustrate this point, I will contrast how our county was able to respond to health care and welfare given Federal mandates that currently exist. In the area of health care, the service levels of Medicaid, or what we call MediCal in California, were mandated, but how the service was provided was not. Consequently, in 1980, our county requested State legislation to authorize the Santa Barbara County Health Authority, which resulted in the abolition of county hospitals by contracting out with the private sector, the requisite health care services.

The end result was an annual county savings of $10 million a year and a better delivery of health care services for the indigent population. I think this goes to some of the questions you raised earlier, Mr. Chair, in regards to contracting out.

What is important as far as these proceedings are concerned is to keep in mind that Santa Barbara County's approach was possible only because the Federal mandate regarding Medicaid did not mandate in what way the service was to be provided. I contrast this with welfare, where the process is mandated, and clearly different results were realized. With welfare, not only eligibility and payment schedules expressly mandated, so are the particulars regarding how the program will be administered. When I wanted to implement a plan for welfare beyond our county's general relief population, our county was statutorily prohibited. When I wanted to change eligibility forms and application so 1, not 18 applications would be filled out to be reviewed by eligibility workers, we were again statutorily precluded.

This latter point is significant because the forms have to be individually evaluated and manually processed, which means more forms equal more costs. The point is when we could have been entrepreneurial, cut costs and helped welfare recipients, we were stopped dead in our tracks.

I am sorry my time is up, because I obviously could spend hours with this subject. I provided you only a handful of examples today. Hopefully my testimony has provided some insight as to the ways or road blocks for success. Again, I want to commend you for the job task your committee has accepted. I wish you well. I would be

more than happy to answer any questions at this time. I regret, unfortunately, I have a meeting in the Bay Area, that I am going to have to leave to catch a flight. I'd be more than happy if you wanted me to answer questions.

[The prepared statement of Mr. Stoker follows:]

STATE OF CALIFORNIA
PETE WILSON, Governor

AGRICULTURAL LABOR RELATIONS BOARD
OFFICE OF THE CHAIRMAN
915 CAPITOL MALL, ROOM 382
SACRAMENTO, CA 95814
(916) 653-3613
FAX (916) 653-2743

Post-it™ Fax Note 7671 | Date 10/3/95 | # of pages ▶ 4
To Cheri Tillett | From Michael Stoker
Co./Dept. Congressional Com. | Co. A.L.R.B.
Phone # | Phone # 916 653 3613
Fax # (202) 225-3974 | Fax # 916 653-8750

WRITTEN STATEMENT OF
MIKE STOKER

MR. CHAIRMAN, I WANT TO THANK YOU, THE FULL COMMITTEE AND YOUR STAFF FOR THE RESPONSIBILITY YOU HAVE ASSUMED IN EVALUATING, AND EVENTUALLY RECOMMENDING, WAYS TO SUCCESSFULLY DOWNSIZE, AND RESTRUCTURE GOVERNMENT. ANYONE WHO HAS FOLLOWED THE FULL COMMITTEE, AND IN PARTICULAR THE SUBCOMMITTEE ON GOVERNMENT MANAGEMENT, INFORMATION & TECHNOLOGY, KNOWS YOU HAVE ACCEPTED ONE OF THE MORE SIGNIFICANT TASKS BEFORE THIS CONGRESS AND YOUR STAFF, WHICH IS ONE OF THE FINEST ON CAPITAL HILL, HAS RESPONDED IN A REMARKABLE WAY. THIS HAVING BEEN SAID, LET ME TURN TO THE ISSUE AT HAND-"SUCCESS STORIES" OF REORGANIZATION.

AS A COUNTY SUPERVISOR I HAD TO DEAL DIRECTLY WITH THE NEED TO REORGANIZE IN ORDER FOR OUR COUNTY TO FINANCIALLY SURVIVE. FROM 1991 TO 1994 THE CALIFORNIA STATE LEGISLATURE PERMANENTLY TRANSFERRED 6 BILLION DOLLARS FROM LOCAL GOVERNMENT TO THE STATE TREASURY IN ORDER TO BALANCE THE STATE BUDGET. THE WAY THE STATE MET THEIR FISCAL DEMANDS, BY STEALING FROM PETER TO PAY PAUL, IS NOT A SUCCESS STORY. THE WAY MANY OF THE COUNTIES AND CITIES IN THIS STATE RESPONDED IS!

IN SANTA BARBARA COUNTY OUR PROPORTION OF THE 6 BILLION DOLLAR STATEWIDE TRANSFER WAS 16 MILLION DOLLARS LOST ANNUALLY. THIS IN ADDITION TO THE 20 MILLION DOLLAR DEFICIT PROJECTED AT THE START OF 1991 REPRESENTED A POTENTIAL 36 MILLION DOLLAR SHORTFALL. TO RESPOND, WE EMBARKED UPON A SIGNIFICANT EFFORT TO DOWNSIZE, CONSOLIDATE, STREAMLINE OR ELIMINATE. THE GOAL I ARTICULATED TO DRIVE THE PLAN WAS THE PREMISE THAT ANY CONSOLIDATION WHICH WOULD REALIZE A NET COUNTY SAVINGS AND NOMINALLY IMPACT THE LEVEL OF BASIC SERVICES SHOULD BE THE STARTING POINT OF THE REORGANIZATION PLAN. AS A RESULT, 38 DEPARTMENTS WERE CONSOLIDATED INTO LESS THAN 24. ALL DEPARTMENTS SERVING INTERNAL COUNTY FUNCTIONS WERE CONSOLIDATED INTO ONE GENERAL SERVICES DEPARTMENT; EXTERNAL, NON-REGULATORY ENVIRONMENTAL AGENCIES

WERE MERGED INTO PUBLIC WORKS; ALL ENVIRONMENTAL REGULATORY AGENCIES WERE CONSOLIDATED INTO ENVIRONMENTAL HEALTH; AND FIRE AND SHERIFF SERVICES WERE COMBINED INTO ONE AGENCY, THE FIRST COUNTY TO DO SO IN THE NATION, WITH THE COUNTY SHERIFF AND THE FIRE CHIEF BECOMING THE SAME INDIVIDUAL. IRONICALLY ONE CONSOLIDATION I HAD RECOMMENDED WHICH WOULD HAVE REALIZED THE GREATEST GAINS WAS NOT APPROVED DUE TO EXTRANEOUS POLITICAL PRESSURES. THIS WAS A PROPOSAL TO MERGE HEALTH CARE, SOCIAL SERVICES AND MENTAL HEALTH INTO ONE FAMILY SERVICES DEPARTMENT. SIGNIFICANTLY, THIS CONSOLIDATION WOULD HAVE SAVED MONEY AND REALIZED BETTER CONSTITUENT SERVICE BUT AS THE OTHER CONSOLIDATION PLANS TOOK HOLD AND GENERATED THE SAVINGS NECESSARY TO BALANCE THE BUDGET THE POLITICAL WILL TO REORGANIZE GAVE WAY TO TRADITIONAL POLITICAL PRESSURES. THE MORAL OF THIS STORY FOR CONGRESS IS SIMPLY PURSUE ALL RESTRUCTURING OPTIONS AS PART OF A BALANCED BUDGET PLAN AS IT WILL BE EVEN MORE DIFFICULT TO PURSUE THE SAME RESTRUCTURING OPTION ON ITS INDIVIDUAL MERITS.

FROM OUR EXPERIENCE I WOULD LIKE TO STATE SOME OBSERVATIONS AND POTENTIAL RECOMMENDATIONS WITH YOU.

FIRST, I STRONGLY RECOMMEND THAT THE GOAL SHOULD BE TO PROVIDE ANY GIVEN SERVICE THROUGH ONE LEVEL OF GOVERNMENT. LOCALLY OUR REORGANIZATION PLAN ELIMINATED ANY DUPLICATION OF SERVICE BETWEEN COUNTY AGENCIES. THIS ASSURED BETTER CONSTITUENT SERVICE BY ONE AGENCY PROVIDING THE SERVICE AND ADDITIONALLY GENERATED SIGNIFICANT SAVINGS ALLOWING OUR COUNTY TO ELIMINATE THE POTENTIAL 36 MILLION DOLLAR SHORTFALL AND DELIVER A BALANCED BUDGET.

WHILE THIS CONCEPT OF CONSOLIDATION MAY SEEM OBVIOUS THE FACT REMAINS THAT WE OFTEN PROVIDE THE SAME SERVICES IN DIFFERENT WAYS THROUGH SEVERAL LEVELS OF GOVERNMENT. FOR INSTANCE, WITH THE ENVIRONMENT WE FIND FED EPA, IN THIS STATE CAL EPA, AND TO IMPLEMENT FEDERAL MANDATES ALMOST ALL COUNTIES MAINTAIN SEVERAL DEPARTMENTS TO RESPOND TO ENVIRONMENTAL RESPONSIBILITIES; IN HOUSING WE HAVE HUD, CALIFORNIA HAS THE DEPARTMENT OF HOUSING & COMMUNITY DEVELOPMENT AND MOST COUNTIES HAVE HOUSING AUTHORITIES AND REDEVELOPMENT AGENCIES; AND IN LAW & JUSTICE WE HAVE COUNTY JAILS, STATE PRISONS AND FEDERAL PENITENTIARIES. NEEDLESS TO SAY I COULD GO ON AND ON . THE POINT IS AT EACH LEVEL WE ARE SPENDING MILLIONS AT THE LOCAL LEVEL AND BILLIONS AT THE STATE AND FEDERAL LEVEL IN ADMINISTRATION COSTS ALONE. WITH THIS IN MIND YOUR COMMITTEE SHOULD CONSIDER CREATING A TASK FORCE OR RECOMMENDING THE ESTABLISHMENT OF A COMMISSION WITH THE RESPONSIBILITY TO ASSESS AND EVALUATE FEDERAL, STATE AND LOCAL

SERVICES WITH THE GOAL OF IDENTIFYING WHICH SERVICES COULD BE DELIVERED THROUGH A "PRIMARY" PROVIDER WITH THE OTHER GOVERNMENTAL SECTORS ASSISTING MERELY IN A SUPPORT ROLE. WE TALK ABOUT "RUNNING GOVERNMENT LIKE A BUSINESS." WELL I CAN GUARANTEE IF THIS WAS A PRIVATE CORPORATION OPERATING A PRIVATE GATED COMMUNITY ONE SUBDIVISION OF THE CORPORATION WOULD BE RESPONSIBLE FOR ENVIRONMENTAL PROTECTION, ONE FOR JAILING, ONE FOR HOUSING, ETC. IN MY OPINION WE SHOULD ATTEMPT TO TO THE SAME THING IN THE PUBLIC SECTOR WHENEVER FEASIBLE. UNFORTUNATELY, ALL STUDIES WHETHER IT BE THE ASH COMMISSION AT THE FEDERAL LEVEL OR THE LITTLE HOOVER COMMISSION HERE IN CALIFORNIA HAVE STUDIED REORGANIZATION IN THE ABSTRACT WITH THE FOCUS ESSENTIALLY ONLY BEING THE LEVEL OF GOVERNMENT THEY WERE INVOLVED WITH. TO PROPERLY ASSESS GOVERNMENTAL REORGANIZATION AND REALIZE THE MAXIMUM EFFICIENCIES IT IS ESSENTIAL AT SOME POINT TO MAKE THE ASSESSMENT BY ANALYZING ALL THREE LEVELS OF GOVERNMENT AND HOW EACH INTERFACES WITH THE OTHER.

SECOND. PROVIDE LOCAL GOVERNMENT GREATER FLEXIBILITY IN IMPLEMENTING FEDERAL MANDATES. THE SUCCESS STORY I HAVE DESCRIBED IN SANTA BARBARA COUNTY WAS REALIZED SOLELY IN THE AREAS OF WHICH WE HAD DISCRETION. WHERE FEDERAL MANDATES DICTATED SERVICE LEVELS, ELIGIBILITY REQUIREMENTS AND MOST IMPORTANTLY THE PROCESS TO BE APPLIED IN PROVIDING THE SERVICE, THE RESULT WAS AND CONTINUES TO BE ON-GOING INEFFICIENCY AND A WASTE OF TAXPAYER DOLLARS.

TO ILLUSTRATE THIS POINT I WILL CONTRAST HOW OUR COUNTY WAS ABLE TO RESPOND TO HEALTH CARE AND WELFARE GIVEN THE FEDERAL MANDATES THAT CURRENTLY EXIST.

IN THE AREA OF HEALTH CARE THE SERVICE LEVELS OF MEDICAID, OR MEDICAL IN CALIFORNIA, WERE MANDATED BUT HOW THE SERVICE WAS PROVIDED WAS NOT. CONSEQUENTLY, IN 1980 OUR COUNTY REQUESTED STATE LEGISLATION TO AUTHORIZE THE SANTA BARBARA COUNTY HEALTH AUTHORITY WHICH RESULTED IN THE ABOLITION OF THE COUNTY HOSPITALS BY "CONTRACTING OUT" WITH THE PRIVATE SECTOR THE REQUISITE HEALTH CARE SERVICES. THE END RESULT WAS AN ANNUAL COUNTY SAVINGS OF TEN MILLION DOLLARS AND A BETTER DELIVERY OF HEALTH CARE SERVICES FOR THE INDIGENT POPULATION. WITH THIS IN MIND IT SHOULD BE NOTED THAT WHILE PRESIDENT CLINTON AND HIS LOS ANGELES HEALTH CARE "BAILOUT" IS TOUTED AS THE BEGINNING OF A MODEL HEALTH CARE DELIVERY SYSTEM THROUGH CONTRACTING OUT, THE MODEL WAS FIRST CREATED IN 1980 IN SANTA BARBARA COUNTY. SINCE THAT TIME ADDITIONAL COUNTIES FOLLOWED THIS MODEL APPROACH. UNFORTUNATELY LOS ANGELES COUNTY DID NOT.

WHAT IS IMPORTANT AS FAR AS THESE PROCEEDINGS ARE CONCERNED IS TO KEEP IN MIND THAT SANTA BARBARA COUNTY'S APPROACH WAS POSSIBLE ONLY BECAUSE THE FEDERAL MANDATE REGARDING MEDICAID DID NOT MANDATE IN WHAT WAY THE SERVICE WAS TO BE PROVIDED. I CONTRAST THIS WITH WELFARE WHERE THE PROCESS IS MANDATED AND CLEARLY DIFFERENT RESULTS WERE REALIZED.

WITH WELFARE, NOT ONLY ARE ELGIBILITY AND PAYMENT SCHEDULES EXPRESSLY MANDATED, SO ARE THE PARTICULARS REGARDING HOW THE PROGRAM WILL BE ADMINISTERED. WHEN I WANTED TO IMPLEMENT A PLAN FOR WORKFARE BEYOND OUR COUNTY'S GENERAL RELIEF POPULATION, OUR COUNTY WAS STATUTORILY PROHIBITED. WHEN I WANTED TO CHANGE ELGIBILITY FORMS AND APPLICATIONS SO ONE, NOT EIGHTEEN, APPLICATIONS WOULD BE FILLED OUT TO BE REVIEWED BY ELGIBILITY WORKERS, WE WERE AGAIN STATUTORILY PRECLUDED. THIS LATTER POINT IS SIGNIFICANT BECAUSE THE FORMS HAVE TO BE INDIVIDUALLY EVALUATED AND MANUALLY PROCESSED WHICH MEANS MORE FORMS EQUAL MORE COSTS. THE POINT IS WHEN WE COULD HAVE BEEN ENTREPRENEURIAL, CUT COSTS AND HELPED WELFARE RECIPIENTS WE WERE STOPPED DEAD IN OUR TRACKS.

THOSE WHO SUPPORT THE CURRENT SYSTEM WILL ARGUE WE COULD HAVE RECEIVED WAIVERS.....AND WE COULD HAVE. HOWEVER I WOULD RESPECTIVELY SUBMIT THAT IT IS NOT PRACTICAL TO EXPECT SUBURBAN AND RURAL COUNTIES, AND EVEN MOST URBAN COUNTIES, TO GO THROUGH THE EXPERIENCE OF A COUNTY LIKE PORTLAND WHICH RECEIVED WAIVERS THROUGH THE PERSISTENCE OF SENATOR MARK HATFIELD. THE SYSTEM SHOULD NOT RELY UPON EVERY COUNTY HAVING A MARK HATFIELD TO FIGHT FOR WAIVERS. THE SYSTEM SHOULD NOT MAKE "ENTREPRENEURIAL SPIRIT" THE EXCEPTION BY REQUIRING "WAIVERS," IT SHOULD INSTITUTIONALIZE FLEXIBILITY BY DESIGNING MINIMUM STANDARDS AND ALLOWING GREATER LOCAL CONTROL.

I AM SORRY MY TIME IS UP AS I COULD OBVIOUSLY SPEND HOURS WITH THIS SUBJECT. I HAVE PROVIDED YOU ONLY A HANDFUL OF EXAMPLES TODAY. HOPEFULLY MY TESTIMONY HAS PROVIDED SOME INSIGHT AS TO THE WAYS OR ROADBLOCKS FOR SUCCESS.

AGAIN I WANT TO COMMEND YOU FOR THE JOB TASK YOUR COMMITTEE HAS ACCEPTED. I WISH YOU WELL. I WOULD BE MORE THAN HAPPY TO ANSWER ANY QUESTIONS AT THIS TIME.

Mr. CLINGER. Thank you very much. We understand that you do have a plane to catch. If our other two witnesses wouldn't mind holding off for a minute and if we do have some questions for Mr. Stoker, we will ask those now. Go ahead.

Mr. HORN. One brief one, Mr. Chairman. As you know, Rufus Miles' law is where you stand depends on where you sit. Now, you sat as chairman and member of the Santa Barbara County Board of Supervisors, you're now sitting as a State official. You might have heard my question earlier on the problem of the Federal Government, basically under the Constitution, relating to States, and whether the States want to create counties or cities has been up to them over the years.

How would you advise us that we get on top of what level does serve as the implementing level? In one State, one could argue that some counties might be much more efficient than cities. In that same State, they might argue that other counties, the cities are more efficient than counties just because of the level of competence that has been displayed over the years.

How do you advise that happening? Is that a State decision or a Federal decision or what?

Mr. STOKER. Congressman Horn, that's a great question. What I didn't mention, that were in my comments, unfortunately, all the studies we've had, whether it's Ash Commissions, focusing on the Federal Government, or Little Hoover Commissions, who have done a great job, will focus more in on the State, we need to collectively look at all three levels of government at the same time, and the Long Beach officials made that same point.

I think Congress has to make a decision. Ultimately, we should try—the exercise should be who should be the primary provider. If Congress makes a decision to get out of the business and basically—and I agree with the concept of revenue sharing and I also believe that you can trust government with block grants, local government or State government.

But if Congress makes the decision to get out of a certain business, then I think it's probably realistically going to have to be left to local government and the State to debate amongst themselves how that realignment will take place. But I think the first issue and the first threshold question that has to be answered by Congress is what is their involvement going to be in any given issue.

And so I think that Congress has to make that question. The more that Congress divests, and I think they're moving in the right direction, and allow the local government to make the decision, ultimately, realistically, we can say pass it to the States, but we all know what the States are going to do is they're going to pass it down to the local level to administer the plan, as we know what's happened here in California.

Mr. HORN. See, the problem is just that. You have a huge bureaucracy in Washington. You have a second huge bureaucracy in Sacramento. And we aren't without a bureaucracy in the county of Los Angeles and even the city of Long Beach.

Mr. STOKER. Absolutely.

Mr. HORN. So we can't look to them to look in some great objective way. On the other hand, the political pressures at the local level in electing assembly members, State Senators, can have an

impact if the local people don't like what the State government is doing. They can change their representation. If they don't like what the county is doing, they can change their representation. If they don't like what the city is doing, they can change their representation.

So how do you see that working out with those competing forces?

Mr. STOKER. Again, as Washington divests—and we've seen it here since 1991. Probably a lot of people in this audience know what the—the word now has become a household word—realignment in this State in terms of how we've realigned between what cities and counties in the State have done, and, fortunately, that's the benefit of a democracy is that the special interests—often, counties and the cities, League of Cities and CSACS and representing counties in the State, found a lot of support with those groups to come to our assistance in regards to that alignment issue, in regards to what a county or a city is doing.

In this State, often, with many of the social services, it will be the county. And to, for sake of a better way of describing it, keep the legislature honest, as much as they would have liked to have gone farther and done more and taken more money and required the counties and cities to do more, those special interests were out there to block that effort.

I think that's something the Congress obviously—the first and most important step is getting the Congress to divest that bureaucracy on usually a service that they're not even administering. They have nothing to do with it other than they've created the mandate. They create the bureaucracy, but then the actual delivery is going to be, in some States, by the State or, in some States, by local government.

But Congress needs to make that divestiture and then I think some of the questions you asked on the earlier panel in regards to how you account for—one question—one answer that I didn't think was—that I would be a little bit more direct in is I think you can, as you realistically conclude, if it's a local government providing the service, give the money directly to the local government.

You talked to the officials from Long Beach and I think you were trying to elicit from them should the State—should they just be able—should they be able to take the money, because then they'll take as much as they want out of it. And I, frankly, wouldn't trust the State all that much. If the State wants to take a nominal administrative fee, that's fine if there's going to be independent audits done in terms of what the States' involvement is on an issue and there would be a realistic payment that's based on their involvement, that's fine. But ultimately I think Congress, one, needs to divest and, second, I think what needs to happen is whoever is really the primary provider of the care is where the funds should end.

The service provider should be the—the money should follow the service provider, essentially.

Mr. CLINGER. The gentleman from New Mexico.

Mr. SCHIFF. Thank you, Mr. Chairman. Mr. Stoker, I just want to ask, you went through a list of proposed consolidations and one of which—I think this is the one that you said you may have proposed that was not accepted, and that is putting social services es-

sentially in one department, which I think is a very good idea. I think it's better for the government to consolidate and it's better for the citizens to be treated as individuals with individual situations and not as just numbers you take off a wall.

But you mentioned one consolidation that surprised me a little bit, and that is a county sheriff being also the fire chief. I say that because I respect both professions and I'm wondering isn't there a problem that presumably the individual would have one expertise or the other and not both.

Mr. STOKER. I think what you find, Congressman, is what we found. First off, organized labor for both the deputy sheriffs and the fire fighters supported it. More and more you're finding, certainly in this State, fire fighters are appointed by boards and sheriffs are elected by the constituents. Typically, the people that are really administering both levels of service, the sheriff or the fire chief has become more of an administrator and the person who really knows that level of service is usually the deputy sheriff or the deputy fire chief.

I guess when we talk about running government like a business, that's something we—that's the buzz line we all want to use. If this was a private gated community and you were just looking at delivery of service and you were looking at cost-benefit analysis, you would probably have a public safety department that would run both aspects.

You look at 911 calls, they go into the same phone bank and they get dispatched to the same areas. The sheriffs arrive to the fire scene. The fire fighters, often with paramedic units, will arrive at scenes involving the sheriff. There is that cross-involvement with each.

What we found is essentially we were able to, at a time when all the other cities and counties were cutting cops on the street and fire fighters on the trucks, we were able to actually increase it and what we were able to do as part of this consolidation was basically merge the two bureaucracies of the fire department and the sheriff's department and we were able to generate savings by the——

Mr. SCHIFF. You didn't just keep the same number of bureaucratic positions under one roof. You were able to reduce the total number between the two.

Mr. STOKER. Yes. We were able to eliminate—it was upper management that was eliminated, essentially, upper and middle management, but not the actual cops on the street or the fire fighters in the firehouses.

Mr. SCHIFF. Good lesson on that. Thank you, Mr. Chairman.

Mr. CLINGER. Thank you. Mr. Stoker, as we've gone around the country, we've heard a number of suggestions and there are suggestions in Washington of cabinet level departments we can get rid of. We're in the process of attempting to determine how much of the Department of Commerce, for example, can be eliminated and we've had suggestions that the Departments of Housing and Urban Development, Energy, Education and Labor can be eliminated, too.

Agriculture has not been mentioned as one of those. As the newly appointed chairman of the California Agriculture Labor Relations Board, are there activities that are carried on presently by the Fed-

eral Department of Agriculture that could be better performed by the State level?

Agriculture is a huge bureaucracy. It's one of the largest cabinet level departments we have, I mean, thousands and thousands of people working in there. And I'm reminded of the story about the fellow who was found on the steps of the Department of Agriculture, he worked there and was crying, sobbing and carrying on, and it seemed to be a great tragedy that had happened to him. And they said what's the problem and he said my farmer died, and it was as though each bureaucrat had a farmer for whom he was personally responsible.

But are there any things you think could be done better at the State level that are done at the Department of Agriculture?

Mr. STOKER. Well, now I'd better really qualify myself that I'm not speaking on behalf of the ALRB, but from my own individual perspective. I think if you look at agriculture, it's a classic case and an exercise potentially on how reorganization potentially could successfully work, because when you look at aspects of agriculture—first off, California, we don't receive a lot of subsidies out here.

So when you get rid of—take the Federal subsidies aspect off the platter, of which the current Department of Agriculture is a major, major—it's obviously a major role, certainly States like—States that a vast amount of their agricultural interests rely on the subsidies, would probably take a different perspective.

But in California, you would have environmental issues that obviously it's not going to be the Department of Agriculture that's going to have the primary perspective. It's going to end up being the EPA and you start getting into all the other Federal agencies that deal with environmental issues. That has a direct impact with agriculture that they have a major concern about.

You have immigration issues, which we addressed, that would be dealt with in other departments, I think appropriately, and by potentially, hopefully by where this Congress is headed in regards to dealing with the illegal immigration situation. And then I think, frankly, I think agriculture—if you were to go to the average farmer, agricultural interest in California, most of where Washington can help them is going to be on their policies that affect them in regards to trade, whether it's NAFTA or GATT or policies like that or whether it's the Commerce Department and how they promote agricultural commodities overseas.

That probably has the biggest impact of any. I think if you went to most farmers here, they would probably look at the commerce aspect of agricultural, of which, you know, I know in your hearings, a lot of—one of the areas that people said was the one area that commerce should remain was that one area, and that's an area that probably should be underscored and I support that.

Maybe more resources should be given to that function, but that function doesn't justify Department of Commerce. Then you look at the other areas in commerce, then they should be parked somewhere else. But as far as agriculture is concerned in California, that would probably be the one thing that they're the most concerned about. Other than that, they're going to be looking to the State that they deal with directly on their agricultural matters that affect their livelihood.

Mr. CLINGER. Mr. Stoker, thank you very much. We will release you.

Mr. STOKER. Thank you very much.

Mr. CLINGER. Thank you for your participation and your excellent testimony.

Mr. STOKER. I, again, commend this committee. What you're doing—I really am one of those that believe this is one of the most important things that—amongst many important things that this Congress is doing, that it's a real opportunity and I think we're in great hands and that we're going to take advantage of this opportunity. Thank you again, Mr. Chairman.

Mr. HORN. Mr. Chairman, I'd just like to say unlike that civil servant sitting on the curb crying, Mr. Stoker did a brilliant job as counsel to our subcommittee and I wish you well as you pursue State government. It needs help. So did we, and we thank you for having served with us.

Mr. STOKER. It's only short-term, a sabbatical. I like that private sector out there to keep me honest.

Mr. CLINGER. Good. Thank you. Mr. Terzian, please. Thank you for your patience.

Mr. TERZIAN. Thank you. Mr. Chairman, members of the committee, my name is Richard R. Terzian. I am chairman of a commission that was created 33 years ago, with the express mandate of continuously studying State government and making recommendations for reform and reorganization.

The Commission on California State Government Organization and Economy, commonly known as the Little Hoover Commission, has three statutory goals—making government programs more effective, more efficient and more economical. As a bipartisan body, with appointees from both the executive branch and the Legislature, the Commission has a solid track record of improving government operations in California. In addition, our reputation for credibility and thoughtful analysis encourages me to believe that some of our recent efforts will eventually lead to successful reform in those areas, as well.

Let me briefly describe, first, our process for conducting our hearings and our reports, before outlining our past successes and future hopes. The Commission reviews six to eight programs or functions of the State each year, conducting public hearings, meeting with experts, reviewing all available research materials. We then issue well documented and comprehensive reports that propose legislative and administrative changes. Finally, we subsequently work with legislators and State program managers to modify laws and institute needed changes.

I know your hearing is focused on success stories. I'd like to give you a few from each of the three mandates that the Commission pursues—economy, efficiency and improved service.

On pure economics, the Commission has advocated reforms that have saved the State of California billions of dollars. Such simple things as centralizing fleet administration and buying airline tickets at a standardized competitively bid State rate seem just like common sense today. They were innovative reforms when proposed by the Commission years ago. The most dramatic dollar savings, more than $3 billion in the past decade, have come from forcing

hospitals to negotiate rates for Medicaid and medically indigent patients, an unheard of departure from normal health care pricing when the Commission pushed this reform through in the mid 1980's. The Commission has continued to advocate economy in the State's health care programs, leading the push for greater enrollment of Medicaid recipients in managed care, the form of medical care coverage now in use by more than 50 percent of Californians.

When it comes to efficiency, the Commission has argued persistently that State government can do its job better and at less cost if it coordinates its operations. In other words, the right hand should always know what the left hand is doing. Unfortunately, not always. The most prominent example in this area is California's oversight of the real property assets it owns, 3,700 square miles and some 19,000 buildings. More than 70 departments used to manage these assets separately and, in many cases, poorly. Records were scattered or nonexistent. In one department, records were kept in a shoe box. At the insistence of the Commission, we got legislation ultimately. The State now has a centralized property inventory and is taking the necessary steps for comprehensive, proactive management of these important assets.

Finally, in the area of improved service, the Commission has done ground-breaking work in the elder care arena. Under the Commission's leadership in the 1980's, laws were set into place to improve protections for residents of skilled nursing facilities and increased the ability of the State to provide oversight. Ombudsmen in each county now provide an avenue for complaints and effective monitoring. The State has a well delineated system for handling complaints and issuing citations. While the Commission believes that more work remains to be done, especially in the area of helping consumers identify nursing homes with high standards and good quality care, much has been accomplished in the past decade.

As we look to the future, the Commission has responded to the State's lagging economy and increasing demands for governmental services by focusing on how government itself could become more effective and efficient. We have issued two reports and are about to issue a third that we hope can be used to change the face of government and re-engineer how it operates.

Before closing my comments, let me briefly share the highlights of these reports with you. In March 1993, we issued a major report on how the State of California purchases about $4 billion worth of goods and services annually. The main thrust of the report was that government must throw out the rules and regulations that make procurement a time-consuming and costly process and instead focus on the desirable outcome—obtaining the best value in return for taxpayer dollars. In response, the State has begun to overhaul its procurement practices, especially in the fast-moving high technology field.

In April of this year, our report on the State's civil service system highlighted the needs for more effective ways to hire, discipline, manage, train and encourage workers. The report has been well received by many legislators and we look for a strong effort to implement reforms this year.

In a report we are issuing next week, the Commission encourages the State to shift to performance-based budgeting. This ap-

proach to budgeting links dollar allocations with actual program outcomes and allows policymakers to focus on what is being accomplished instead of how many pieces of paper are being processed. We believe that such a shift from today's traditional line item budget has the potential for injecting much needed reality into policy debates.

I hope the examples I have described are helpful to the committee. I have brought copies of our reports to share with you, which I provided the staff. I believe the main message that our Commission can leave with you is that assessment and reform should be a continuous and ongoing part of government. The success stories I've told you about from the past do not sound startling or innovative today, but someone needed to point them out and lead the effort to make them happen. A commission such as ours, with its bipartisan membership and independent status, can be a valuable asset in driving change and improvement. Again, thank you for inviting me to be part of your hearing. I'd be happy to answer any questions.

Mr. CLINGER. Thank you, Mr. Terzian. If you can defer for a moment, we'll ask our final panelist to speak and then we'll have questions for both of you. Please.

Mr. SILVA. Thank you, Mr. Chairman and members. Thank you for involving the California Constitution Revision Commission in your discussion today.

What I want to do is highlight a couple of points that the Commission has been making. Some of them you've been hearing throughout the morning. They are these. That the State itself needs to look at its own governmental structure and do what Congressman Dreier suggested, as Professor Drucker has stated, that it's time to think again about our governance structure.

So the Commission is looking at four discreet areas which it was asked by the legislature and the Governor to do. It is to look at the State's governance structure, to look at our State's fiscal system, both State and local, to look at the way our K-to-12 structure is organized, and to look at the way the State and local relationship has both developed over time, where it is now and what change is possible.

Change, as you all know, is a very difficult thing to confront, as Louis Carroll said in "Through the Looking Glass." It is time to think, you know, as the walrus said, about many things. It's very difficult to take those who are critical of the status quo and the current system and then ask to rethink those things and then to look at some new system that has not been experienced.

So what the Commission is trying to challenge everyone to do is to say, well, we have a system that basically originated from the Constitution 1879. That's the last time we did a major overhaul of our Constitution. There was a revision that was done in the 1960's, but it was mainly an editorial job. Our Constitution prior to that time was one of the third longest in the world. It's now average to State constitutions, because it was edited, in effect, in the 1960's. But we've never really looked at our organizational structure.

So I want to highlight a couple of those issues and then talk specifically about the State-local relationship, which is an issue that

you all are beginning or are confronting, which I think is a very important thing that we're all doing at the same time.

With respect to State governance, we have 12 elected officials in the State. There are four that are elected by districts. The rest of them are elected Statewide. One of them, the State Board of Equalization, was created in a different time to answer a different problem, in 1879. We're suggesting that we are one of the last two States that has an elected tax administration board. We're saying that really ought to be appointed, that there ought to be a board for quasi-judicial issues in the field. It ought not to be an elected board.

We're suggesting that we have three other Statewide elected officials who basically serve administrative duties and what the people ought to do is to be asked to elect those State officers who have check-and-balance functions, checks against the executive exercise of power. So we're suggesting that we look at our governance structure. Secondary, we're also suggesting we look at the legislative structure.

We've had a two-house system, as you all know, as all but one State has in the State. Our legislature happens to be the smallest on a per capita basis. We're the largest State, smallest legislature. We have 120 members. We have a State Senate that has 40 members. They represent 800,000 people. The assembly, twice the number, represents 400,000 people.

We're suggesting that we ought to consider going to a unicameral system, where members of the legislature would represent 250,000 people. Now, there are a series of checks and balance issues that we're going to—the Commission will be discussing, because as Jefferson warned us, there is a bit of—several issues about unicameralism which even the founders discussed. We're suggesting to go back and discuss that issue again.

The third area in governance is to re-look at the initiative process, which the progressives brought us in 1911. This State has the most restrictive initiative process in the country. Of the States that have it, there is virtually no role for the legislature or, I would argue, the body politic generally to discuss initiative measures brought to the people by particular individuals or interests.

There was a time when the initiative process operated as a release valve. It was created as a release valve in the beginning. By the late 1960's, it was no longer simply a release valve on interest captured legislature as it was—as was its original objective. So we're suggesting that we look at that issue, as well.

On the budgetary issue, as you heard a moment ago, what we're all now looking—re-looking at how we make our fiscal choices. There ought to be a strategic element in the State's budgeting system. It ought to understand what both its responsibilities are and local responsibilities. It ought to be based on performance, a novel idea. But if you talk to budget majors about it, they go, oh, gee, but our particular system doesn't will itself to having standards and observations and evaluations done.

Our good friends at the Little Hoover Commission have been at this for some years. That ought to know that this is not the first time that the Commission, the Little Hoover Commission has suggested that there ought to be standards of performance.

We are suggesting that there be a constitutional element of budgeting. We're also recommending that the State itself be required to adopt a balanced budget. Now, it is mythical that States, on their own, are required to adopt a balanced budget. Frankly, I don't believe, although some of their constitutions provide for it, I don't know that there is one that actually has an underlying constitutional and enforceable obligation to adopt a balanced budget. California does not now and has never had.

When the State gets into trouble, the State does one of two things—decreases spending, raises taxes, sometimes increases spending and borrows money. We're suggesting that that system end.

Finally, we have a right to the local government issue. The State has got to redo its State-to-local relationship. We started at the turn of the century with a system that was basically locally based. That is to say local agencies formed, as cities and special districts formed. Counties have been agents of the State. That system of agency relationship between the State level and counties was placed in the Constitution in 1849, in the first Constitution. It was not—it was reviewed, to some extent, in the 1879 Constitution, but basically left alone and time has passed and now is the time to evaluate that.

There are two elements: One is we're suggesting, as you all know, in this discussion about mandates, is that we change that relationship to the extent that the State sets a standard, has an outcome, that it ought to be responsible for the financing of that. The second is that there ought to be an ongoing mechanism for the establishment of those relationships between the State and local governments.

We look very hard at the State's underlying responsibility under the 10th amendment, that, the State and sub-state organization issues are reserved to the State. So we're taking on that very, very seriously. This is a preliminary recommendation. You all have a copy of it. For the folks in the audience, there are copies out at the front desk.

We're hoping that through the rest of this year, through our public hearings that we're going to start on October 24th, we'll get this dialog going about governance and fiscal policies. So thank you very much for your time.

Mr. CLINGER. It's very exciting. Thank you very much, Mr. Silva. Congressman Horn.

Mr. HORN. Thank you very much, Mr. Chairman. You've both made a great contribution to this hearing and we look forward to reading the reports that your groups have prepared.

I guess one of the things that concerns me, now just speaking as a citizen of California, I take it some of the implications of the latter part of your comments is that you will redo the county lines. Is that correct or am I misinterpreting you?

Mr. SILVA. I don't believe that the Commission itself will go into redraw county boundaries. What we're going to propose is that there be a new authority at the local level to organize or reorganize. We have 7,000 units of local government in the State, 58 counties, approximately 482 cities, about 5,000 independent special districts, 1,000 school districts, plus community college districts.

We're suggesting that as—as you know, the last county that was organized in California was in 1911, in Imperial County. We haven't had a new one since. Some of our county boundaries don't make sense, but those ought to be decisions that are made locally.

One of the things the Commission discovered is that you can't, at the State level, do what would be the easiest thing, and that is to simply draw a governmental model and to say here are the county boundaries and here are the county responsibilities and here are the municipal responsibilities and that's that.

We discovered that if we did that that we'd be wrong throughout the State. So the objective here is to create a new charter system, which we call community charters, where you would, in fact, locally, in an urban or non-urban area, would be able to redraw those boundaries, assign responsibilities, have taxing power within those charters. So the long answer to your question is we're not going to do it, but we think, to the extent it should be done, we want to grant power to do it.

Mr. HORN. I just would worry and I think citizens would if the smaller counties, smaller cities, and I have a number of smaller cities in the 38th Congressional District, were going to be absorbed by the bigger entities. I think you're going to have trouble passing that initiative.

Mr. SILVA. Absolutely.

Mr. HORN. I think you're on the right track when you get rid of a number of State officials that we do not need to have elected Statewide, such as the Secretary of State, simply an administrative function and that ought to be appointed and part of perhaps the Governor's office or whatever and we hold the Governor accountable. This is a matter of placing accountability.

Too many of these are spending too much money to get elected to Statewide office for really insignificant jobs compared to the average cabinet officer in any Governor's administration. Obviously, I think you're going to have trouble on a unicameral legislature, but that's a later discussion.

But I think you are on the right track to get rid of a number of these administrative offices, that there's no way that people can hold them accountable and there's no way that you can have real competition unless a millionaire throws his hat or her hat in the ring, and I think that's a silly way to do the people's business.

Mr. CLINGER. Thank you, gentlemen. One of the things that the Committee on Government Reform and Oversight has been working on for some time now is ways to improve the way the Federal Government buys goods and services. We have very good data that suggests the Federal Government pays about 20 percent more than we should for just about everything that we buy, whether it's goods or services. If we're looking for ways in which we can reduce the deficit, hold down Federal spending, it seemed to many of us that one way to do that would be to dramatically reform the way we buy goods and services, get rid of a lot of the arcane procurement regulations we have, the horror stories of $500 hammers and various other outrageous examples of where the Federal Government has, by trying to be over-protective and being too concerned about accountability, actually ended up costing taxpayers a lot more than we should.

Mr. Terzian, this would be addressed to you. Has the Little Hoover Commission looked at this problem as it regards the State situation in terms of how the procurement system works in this State and have you had any suggestions or recommendations as to reform in that area?

Mr. TERZIAN. We've looked at it on several occasions. I say the thrust of the suggestions that we have made to change the system is to allow more flexibility in the hands of the program managers. Allow program managers, the people who actually have the responsibility for providing the service on the bottom line to be able to go out into the public—into the private sector and purchase whatever is necessary in the commercial—that's available commercially at the most effective price.

We saw a dramatic illustration here in California a couple of years ago of what can be done. A portion of the Santa Monica Freeway collapsed during the January 1994 earthquake and the Governor exercised his power to have it repaired on an emergency basis, waived the usual regulations, the usual studies that have to be made, the usual bids that have to be put out, and insisted that it be done immediately and provided a bonus.

Well, that freeway was repaired in less than 4 months, which was a miracle. It's an absolute miracle. And although it probably cost—it may have cost the State a bit more to get it done that quickly, it saved far more than that in lost work time. By contrast, we have freeways in the San Francisco Bay area that are still under repair or repairs have not even been started, from the Loma Prieto earthquake that occurred 5 years ago. So that's what can be done if you allow managers flexibility and you empower them and you trust them.

Mr. CLINGER. Yes. That was a remarkable achievement, I think, and does stand as a marvelous example of what you can do if you get rid of over-regulation, which has stultified the whole process. I know we did a study of waste water treatment systems, which the Federal Government used to be heavily involved in financing, not so much anymore, but if a project was done it was done under Federal guidelines, Federal regulations, Federal control, the average time for an inception of the project to the completion of the project was about 13 years.

If you went into the private bond market to do this and didn't mess around with Uncle Sam, it could be done in 3 years. So we have added incredible layers of bureaucracy to the processes.

One other question that I wonder if you both might speculate on. Obviously, the overall effort that we're pursuing here is how we can redefine this Federal-State-local relationship and make it more partner-like rather than guardian or ward. One of the concerns expressed by those who feel that this is a misguided effort is that you can't really trust State and local governments to maintain standards in such areas as environmental protection, labor rights, and health concerns. That in devolving things back to the local government, we run the risk of severe degradation of things where there have been Federal standards established. I think we have to be concerned about it. I keep coming back to the need that where Federal money is involved, there has to be accountability and there has to be some sort of standard.

How do we ensure that we maintain the standards that we have established and which I think the population agrees with and, at the same time, give States more flexibility in how to do that? Either one of you might speculate on that.

Mr. TERZIAN. Well, I'll just start. First of all, I think there obviously has to be at least a minimal accountability for the money that is sent to the States. For example, you don't want to send money that's intended to be used for hospitals and have the States be able to apply it to highway construction.

But when you get beyond that basic accountability, that basic program purpose, I think it is a severe mistake for the Federal Government to do what it does now and that is in detail, in excruciating, exquisite detail, exactly how that money ought to be spent right down to the last penny on right down to the last minimal project.

Mr. CLINGER. You're suggesting that you could have Federal standards, but provide local flexibility on how to meet those standards.

Mr. TERZIAN. And when you say that people in Washington don't trust the States or there's an idea among some people in Washington that they don't trust the States to meet standards, that's really saying that they don't trust the people of those respective States to make sure that the standards are not kept up, and I thoroughly disagree with that.

I think the people of California or Pennsylvania or New Mexico or any other State are very concerned about their environment, they're concerned about labor standards, they're concerned about everything that the people in Washington are concerned about. I think it ought to be up to them to determine to what level those standards are to be kept, how important they are.

People in one State may feel very differently or somewhat differently as to what environmental standards are necessary or what the standards for protection of labor or any other issue.

Mr. CLINGER. Vice President Gore, when he talks about over-regulation, points to the 23 pages of Federal regulations that determine the specifications for federally purchased ashtrays. There's literally 23 pages of regulation. And if smoking is so bad for us, why are we buying ashtrays at all?

Mr. TERZIAN. It's an old problem. It's an attempt to impose perfection from on high and it never works. The ultimate bad example of that was the old Soviet Union. It failed miserably there. To a far lesser extent, we have tried to do that here and it's not working very well.

Mr. CLINGER. I think that people—obviously, if I live in an area, I'm going to be darned sure that the air and the water are going to be clean, more than some bureaucrat in Washington is going to be concerned about that. I'm going to have real concerns about the environment that I am going to be——

Mr. TERZIAN. Or your idea of how clean it ought to be may be very different than the idea of someone who lives 500 or 2,000 miles away.

Mr. CLINGER. Right. Well, gentlemen, we thank you, again, very much for participating. It's been very enlightening and your testimony was very provocative and challenging. Thank you.

Mr. TERZIAN. Thank you for inviting us.

Mr. CLINGER. Now, Congressman Horn has some people that he would like to introduce and, I gather, who might want to say a word or two to us.

Mr. HORN. Thank you, Mr. Chairman. I would like to introduce several local government officials who are here and ask them if they would like to say a few words. We have sort of the 1-minute period coming up and we'll be glad to give them maybe a minute-and-a-half, as local government officials that have been tested by the voters.

Let me start with the former mayor of the city of Long Beach, a long-time city councilman, almost approaching three decades of service on the Long Beach City Council, an active leader, former president of the California League of Cities and an active leader in the National League of Cities, the Honorable Thomas Clark. Would you like to say a few words? Since you sit in that seat, I think, as I remember.

Mr. CLARK. I sit in the seat next to——

Mr. HORN. Fourth district.

Mr. CLARK. Fourth district. It's a real pleasure to be here and it's certainly of interest to me to see what's occurring. I think it's long overdue to have a revision of this relationship. We're looking at the State level, as far as the Constitution Revision Committee, and I'm very happy to see Fred Silva here.

We've been working with them and we're working also with the Federal Government. We get a little concerned when we hear from the Federal Government that you're a lot smarter on the local level because sometimes that means that we may get the bank, not as much as we'd like, but we get the obligation. So the only thing I would say is that we feel we do have the capability on the local government, but if we're going to get that responsibility, we need the resources. That's the only thing I would—because I think we've been working with you and I think that we'd like to have those resources at the local level because we think that we're here, we hear people and we're right at home and it's easier and more access to us.

I certainly appreciate you being here, appreciate Congressman Horn, who is a long-time friend and has done an excellent job in our community and I'm sure he had something to do with bringing you here today. We appreciate having you and we hope you come back soon and we're looking forward to some good results.

Thank you, again, Steve.

Mr. HORN. Thank you very much, sir. I would just reemphasize the fact that we have passed an unfunded mandates law, which we hope is going to alleviate some of the problems you alluded to.

Mr. CLARK. We appreciate that.

Mr. HORN. The next gentleman I'd like to recognize is the gentleman elected to the State assembly, in his first term, from this area, also a former local official, and we will have another present local official from his area, the Palos Verdes area of the southern Los Angeles County, Mr. Steve Kuykendall.

Mr. KUYKENDALL. Good afternoon. I can appreciate your task somewhat because I sit on the local government committee and the

State legislature and some of these same questions, as with Mr. Silva's comments, we're beginning to hear those ourselves.

I had just a couple of things that I wanted, I think, to me, that are kind of macro issues that you might want to keep in mind. From the State's perspective, I can certainly say we aren't going to be concerned if you want to make Federal Government smaller. That won't bother us. There's a lot of things that we have to do at the State level that are driven by what is told to us by the Federal Government, and I think sometimes the Federal Government has not done a good job of defining when it stops being necessary for the national level of government to be involved in it.

And if you need to err, err on the side of cutting too much and we'll scream about it later, I think. That would just be a good thought process to follow. [Applause.]

I frequently find that same thing happening at the State level and what I sense you will hear, if you don't already have heard it, local officials are going to find themselves being placed in much tougher decisionmaking positions than they have been in the past, because frequently they've had cover from State and Federal level. I think all of us, I, coming from local government, as well, want to see local control resume its preeminent position in how we deal with most of government's activities.

And that will cause our local officials to deal with issues that right now they can say it's somebody else's problem. I want local officials to be aware of that, as well, because we may put some tough decisions on their shoulders that won't be fun to make and I think that's something we'll see in the future.

Another type of macro issue I think is important is we live in one of the most technologically advanced countries in the world, if not the most technologically advanced. I don't think government is anywhere at all close to utilizing anywhere near the kind of capability we have that the private sector thinks is routine. If we're operating in the 1970's level technology, I would be shocked, in many cases, and we're now doing things for the year 2000.

It's time for the government at all levels to realize there is nothing wrong with using high technology techniques to transmit information to your constituency or to get information from your constituents, whether it's an E-Mail system that I've got in the State legislature. I don't know if you all have it at the Federal level or not, or something as simple as having a page on the internet that people can call up and see what you're doing.

I think with that thought process, that technology gives the power of much more rapid communication from different levels, that you can, I think, with some degree of certainty, look at if there is a Federal program, for instance, that needs to be administered by the Federal Government, following along Mr. Taboada's comments and others, we've got plenty of technology. If you want to make it go straight to the person who is going to deliver it, you can track that. That's not a problem, tracking it.

There was a time in our history when it was necessary to have States and then to have subdivisions within States in order to have a flow of information. Technology has overridden that and we now need to take advantage of that growth in technology, and I think that's an area where Federal programs that may need to have local

delivery system, and I'm struggling to find one right now that I can give you an example of, would certainly be an area you could look at using technology to replace layers and layers of flowing through of money to the State and the State to the county and the county to the local government in order to get something delivered to a guy on a street corner here on Ocean Boulevard in Long Beach.

So I would encourage you on those areas and those are broad type of areas, but I think if you keep, from my perspective, those types of parameters in mind, reducing your size in general is going to be good and maintaining the fact that I'm going to put more emphasis on local, local to you all meaning the State and, in turn, us to the local governments, more pressure on them to make sound decisions, but also they're going to be more accountable.

And the voters and the people who I am here to represent and you all are, too, will feel like they can hold us accountable for what we're there doing. Right now they don't. You tax them and I tax them and local guys tax them and then I deliver one service and you deliver another, local government delivers another, and that is just a mishmash and that has to get cleared up.

Thank you very much.

Mr. CLINGER. Thank you very much. I think those were very thoughtful comments and we appreciate that. [Applause.]

I would say that I've heard from some local elected officials who are a little nervous about having things devolve back to them because, as you pointed out, they're going to have to show a little more courage now and that's going to be important. But I think that it's going to restore that effort, will restore more confidence in government because people will really feel that their voice means something, that they can impact what's going on, and that's going to be very important.

The other thing I would suggest is in terms of technology, there is no question that we are under-utilizing what the private sector has been much more aggressive in utilizing. One example of that is we estimate there's about $26 billion worth of waste, fraud and abuse in the Medicare system, which is being ripped off routinely all over the country, and largely because the same bad guys keep getting back into the system. We don't have an effective computer way to track these people to ensure that people, once they are bad caps and are determined to be such, never get back into the system.

There are myriad examples where we would really be able to do a much better job more efficiently with better technology. So I couldn't agree with you more.

Mr. HORN. I'm sure it was music to the chairman's ears when he heard the State was pursuing simplified procurement procedures, since he's the lead author on the congressional bill to do just that. You're in your third reform, I believe, of procurement.

Let me just, before introducing the next local official, note that the field representative, Jim Deere, for State Senator Ralph Dills, was here and had to leave for another meeting. Senator Dills is a long-time public servant in this area. In 1949, as a young member of the assembly, he introduced the legislation that authorized what became California State University at Long Beach. He has now

served a number of terms as State Senator and is one of two or three State Senators that impact the 38th Congressional District.

Next, I would like to introduce a sitting councilwoman of Rancho Palos Verdes and I think, Susan, you've been former mayor, too, haven't you, there, of Rancho Palos Verdes, Susan Brooks. Please join us.

Ms. BROOKS. Thank you, gentlemen. Thank you, Congressman Horn. If anybody knows the impact that unfunded mandates have on local governments, I would think that Congressman Horn is in the great position to understand that.

Thank you for being in the vanguard of revolutionizing this Congress, gentlemen. This is clearly a government that has been out of control and you are taking very strident steps. We admire this. I almost joined you in the 104th Congress. Unfortunately, we learned that you no longer need to come from Chicago in order to vote early and often from the grave. You can actually come to beautiful California. But we do urge you to look seriously at that motor voter law because it is going to affect nationwide in the same way.

As a local elected official in our city of Rancho Palos Verdes, I would like to let you know that we did something that we would hope the Federal Government would put more faith in local governments to be able to do. We are a population of 42,000. In 1993, we had a general operating fund budget of $9 million. We were $2 million in the red. Within 2 years, we were able to put ourselves $2 million in the black and the way we did it was a very common sense way. We cut bureaucracy by 25 percent. We cut our budget by 20 percent and we privatized our services in parks and recreations and wherever necessary.

In fact, the Reason Foundation, a libertarian think tank, identified us as—gave us accolades as a model city for good governance in the city of Rancho Palos Verdes. The effects of the redundancy on the Federal and the local level can be made known in such activities as my position on the Sanitation District Board here locally in Los Angeles County. For example, the EPA has certain requirements about the amount of particulate you can put out into the ocean.

Well, we have a governing board here, which is, I would think, far more restrictive, that's called the AQMD. Now, when we have to take our orders from both the AQMD and the EPA, not only is it redundant, but it becomes ironic because they tend to actually contradict themselves. I am a councilwoman in Palos Verdes. A few miles off the coast of our beautiful peninsula lie several inches of DDT. This DDT has been the subject of a long-time lawsuit with Montrose Chemical Co. This DDT is sitting out there and EPA is telling us that we have to eliminate the particulate from the water. Well, the AQMD knows that if we don't—if we do eliminate those particulate from the water, we no longer have the sedimentation that we need in order to cover up that DDT until we can figure out just what to do with it.

So we have got to eliminate this, because what we have here is a Federal Government that is superseding the local governments, who know best what to do with their problems. They are not going to feel the effects, whatever they may be, of DDT if they were not

in this area. So that's just one example of how it is we need to contain these problems in the local arena.

I would also say that as a former school teacher of 13 years, that the Department of Education is certainly another one of those redundancies that is an example of a government run amuck, I would say. Yes, I do support the Head Start program and I do, like Congressman Horn, support the Head Start program, know that we need to maintain a certain level of services. Nevertheless, the locals best know how to educate their children.

I would say, as a city council member, one of the things we are the most afraid of—Steve Kuykendall, my former colleague, mentioned this and Chairman Clinger, you very adeptly pointed this out. We are very worried that everything is going to be taken away from us. Now, if everything is going to be taken away from us, what we need to be able to do is assess our residents locally, but we need to know that we're going to be getting reimbursements from the Federal Government. We want to know that the Federal Government, when it's taking its hands off, is taking its money out of our pockets, it's not taking its money out of our pockets, it's putting money back into our pockets.

So while we can help the people to see the accountability of where their tax dollar goes, we are hoping that through this downsizing, the Federal Government will eventually return that money to the taxpayer.

Finally, as we move into an era of voluntarism with the dissolution of the welfare state, the dependency that people have been forced to be put under in the past 40 years, we're going to see voluntarism is going to be a much larger factor in our society and we would like to see that rewarded in a variety of ways.

Some people say Tip O'Neill said this. I have also heard that Winston Churchill has said this, but we both have heard that all politics is local and this certainly, I do believe, proves that. Evelyn McVale, I'm sure you all know her, she also said that all politics is personal, and everyone here is personally affected by what you are doing.

So we thank you for taking the time to do this. I just hope that our comments are going to be useful to you. Thank you for giving me this time.

Mr. CLINGER. Thank you.

Mr. HORN. I'd just say, Mr. Chairman, if there's another elected local official that I haven't recognized, please stand up. There are also a number of students here, we're glad to see. Now, I think it's your turn.

Mr. CLINGER. Now we go to what is a very useful part of this program, and that is to hear from you all, and the fairest way to do that is by lottery. I think you all were asked to get a ticket or something when you came in and we're going to go for about 30 minutes with taking your questions and comments. We would ask you to try to keep them brief, if you can, and ask you also to state your name and, if you are affiliated with any organization, let us know that, as well. I'm going to ask the vice chairman here to take over for a few minutes and I'll be right back.

Mr. SCHIFF [presiding.] It's sort of like a lottery, if you'll pardon the expression. Just consider it the fairest way to do it. I believe

they're available and being passed out now. All right. With the tickets I have, let me get started here.

I'm going to use the last four numbers, 6186. While the speaker is coming up, let me take a brief word here to say that if you've never seen a congressional hearing before, our coming and going may be a little bit disconcerting. But what I want all of you to know is the most important part of a hearing is the fact that everything we are saying back and forth is part of the hearing record and, in due course, it will be printed and made available to every Member of Congress. So that's what we are really concentrating on in terms of collecting this testimony.

Sir, if you'd be kind enough to identify yourself.

Mr. EISENHOWER. My name is Steve Eisenhower.

Mr. SCHIFF. You don't have to be, but are you with——

Mr. EISENHOWER. No organization. I live here in Long Beach.

Mr. SCHIFF. That's fine.

Mr. EISENHOWER. And certainly didn't plan on being the first one to speak. I just had a couple of observations. I certainly agree with using all the current technology that's available, simplified procurement and so on. The gentleman who suggested to put the money to the local level I think is absolutely right. I think it's an immoral presumption to say, from on high, whatever level that is, that we know what to do and you're too stupid or too greedy or too whatever adjective you may want to use to be able to govern yourselves.

We ultimately are the ones that have to live with a decision and if we aren't going to be responsible enough to participate, then I guess we deserve what we end up with. A good example might be the current jury process is a good example. If we're unhappy with the quality of deliberation, and yet we refuse to participate in the jury system and continue to opt out, we get that level of quality. So we have to participate. If we make some bad judgments or just let things happen, then maybe it will force us to get involved.

So that's basically it. Thank you.

Mr. SCHIFF. And we thank you for participating. The last four numbers 6201. Do we have anyone with 6201? Right there.

Mr. ROSY. Roger Rosy, I'm with the libertarian party. A few years ago, the Grace Commission completed a report, a massive study on government operations. They recommended several hundred billion dollars in cuts that could be made without affecting the basic government services that people rely on. Congress accepted the report, said thank you, and then shelves it.

There is no reason why Congress, especially this Congress, which has promised to do basically that same thing, start reorganizing government, couldn't implement these cuts right now. These were basically subsidies, corporate welfare and waste. They could be implemented.

One glaring example is government subsidies to the arts and humanities. The National Endowment for the Arts, the National Endowment for the Humanities. Basically, this is taking money from taxpayers, subsidizing art that these taxpayers have not individually decided to patronize. There is no reason that individuals can't patronize arts and humanities on an individual level, make their own choices, rather than having government make the choices for them.

The Grace Commission did a terrific job in identifying cuts that could have been made, several hundred billion dollars, enough to balance the budget and start paying off the massive debt that Congress owes the country. Thank you.

Mr. SCHIFF. Thank you, sir. Last four numbers 6315. I don't see anyone answering to that. 6314.

Mr. HUGHES. I'm 6314. It sounds like a touch of big brother. My name is Roger Hughes and I'm a resident of Orange County, a teacher at Garr High School in Cerritas, which is, of course, in this area, a member of the California Republican League, former chapter president in Orange County. I speak as a fiscally conservative voter, 1 of the 19 percent across the country who voted for Ross Perot because he had, in my opinion, the correct view of how to try to deal with the badly unbalanced budget, which, of course, would also necessitate some structural changes, as well.

I'm a member of the Citizens Against Government Waste, one who has looked through an analysis of the W.R. Grace Commission report, and I think that if every citizen would take a few minutes to take a look at even that rather outdated report, even in 1995, they would be as upset as I still am and others who also are members of CAGW.

As a teacher of American government and American history and one who has been in the classroom for more than 27 years, I've had to answer the question of students—why is it that the citizens of Cerritas and Artesia, where I draw students from into my classroom, why is it that citizens of the Long Beach-San Gabriel Valley area do not have two U.S. Senators as the citizens of North Dakota or South Dakota or Montana do have and how unequal and unfair it is for our votes in California to go just for two Senators, when those votes cast in those States are so much more powerful, so much more meaningful?

And in the students' view, the need of a new constitutional convention, to change the U.S. Senate so it, too, like the House, is represented on the basis of population and now the invalid nature of allowing States two Senators, when the proportion or the number of population is so badly out of kilter and the effectiveness and impact of a vote in California for the office of U.S. Senator is so much less than it is for a voter in those States.

I've got to tell you that——

Mr. SCHIFF. I have to ask if you can conclude now, sir, because we want to get to as many people as we can. I don't want to be too limiting.

Mr. HUGHES. One last point, quickly. The other question that students often have is why is it that the Government of the United States is continued to be located in the District of Columbia? It, too, should be moved so that it's more easily accessible by all citizens going into the 21st century.

Thank you very much for the opportunity and I hope that, although I can't defend the issues and points raised, that they are put on the public agenda for the 21st century. Thank you.

Mr. SCHIFF. Thank you for that. Last four numbers, 6309. I don't see anyone coming up. 6179. While the gentleman is coming up, I want to say that last proposal about moving the capitol west gets

an amen from the westerners, but I don't know if our chairman from Pennsylvania, would necessarily go along with that.

Mr. VALENTINE. My name is John Valentine. I live here in Long Beach. I've lived in Los Angeles County since 1953. The committee has mentioned cynicism and the committee has also mentioned that you can change your representation if you want to.

I wish the committee would add to its agenda the problem of gerrymandering. In California, we now have all of our Representative districts and our State Senator districts have been set on the basis that the only consideration is the geographical unity of the district, that the district is the place where people trade and live, and you do not consider party representation.

I think that all the States should have that situation so that when elect Congressman Horn, he represents all of Long Beach and the contiguous communities. If you had held this hearing 10 years ago, you would have had two congressional districts, one intertwined with the other and the city of Long Beach would have been represented by Dana Rohrabacher and—I've forgotten his name—and Mr. Anderson.

The reason we have proper representation districts in the State of California now is that the reapportionment set in 1991 was vetoed by the Governor, which turned it over to the Supreme Court and the Supreme Court set the boundaries of the districts and it did not pay any attention to party registration. That gives us districts that are contiguous, that represent where we live, where we have our problems, where we trade, where we go to school and go to church, and it does not divide us along any lines, cultural, racial or any other.

That is very important because we must all be Americans first and whatever else we want to call ourselves, make that second. Thank you very much.

Mr. SCHIFF. Thank you very much. Before calling the next number, I just want to say that for historical reasons that I can't enumerate right now, maybe you can, Steve, Congress did pass that authority to the States and the drawing of congressional districts is not done by Congress. It is done by your State legislature and by your Governor, who, of course, are all elected within your State.

Going to the next four numbers, No. 6179, or is that what I just—I just did that one. No. 6190. The suggestion was made to call another number so, it's a big hall, the next person can come down. 6187 is the next number I have. If that person could join us down here, thank you. Yes, sir. If you could state your name and any affiliation.

Mr. GUARNERI. Yes, sir. My name is Rodney Guarneri, spelled G-u-a-r-n-e-r-i. I'm with GOPAC. I've been following the Contract with America and the reforms that have been suggested, that are being debated and being scrutinized presently.

Mr. SCHIFF. Excuse me. I'm sorry, don't mean to interrupt. I'd invite the next speaker to just have a seat down here, sir, just down this way in the front row, if you would, would appreciate it. Go ahead sir.

Mr. GUARNERI. The message that I have for the legislature, the Congress, which I'm very thankful for the job that they're doing, the boldness that they have, that obviously there are going to be

people that are going to be upset when things are taken away that have been given for so many years. But regarding the fiscal problems that we find ourselves in—and I don't want to have any qualms about this or split any hairs. We do have a fiscal problem. We need to recognize that.

And the problems that we have result—the fiscal problems that we have are a result of a moral problem, that—the citation I'd like to make for this is the Heritage Foundation. If you look at the index of cultural indicators, you will see that as our society has declined morally and our ethical standards have come down, our economic problems have gone up. You see a direct relationship between morality and economics.

Now, for liberal and moderate Republicans, whoever they may be, I have a message. You need to get it. Economics and morality go hand in hand. They're joined at the hip. If you don't make that connection, all the posturing, all the things that are currently being done, all the best efforts that are being done will be done in vain. Our problems that we have with crime, with illegitimacy, with dependency on welfare, all those things can be summed up with a lack of morality and honesty.

If we have more honesty, we're going to have more competition, we're going to have excellence in the area of business, but we'll have that in the area of representation. Local government, assuming its rightful role, there is the accountability factor. We need to make government accountable to us, the people, and then we become accountable for the choices that we make. Thank you very much, sir.

Mr. SCHIFF. Thank you very much. 6187, you're up, and I'm going to call 6173, if you're here, to come on down. I don't see that. I'll call 6176. Could you come down toward the front, if you could? Go ahead, sir.

Mr. BRANSON. My name is Ronald Branson, with the Judicial Misconduct Review. I've had the, I'll say, unhappy experience of having to pursue cases up to the U.S. Supreme Court and now which I have my 10th and 11th pending before the U.S. Supreme Court. I would just like to state to this panel that we have something fundamentally wrong with our government here of America. That is that the laws are not being respected by Federal Judiciary. It's my contention, and I've got evidence for this and I will supply it for the board here, that laws passed by Congress are being ignored and is leading on into anarchy.

I've complained to some Members of Congress and when I heard that this meeting was taking place down here, I thought I would come down and bring my presentation to Congressman Horn. My point is it doesn't matter what we sit down here and talk about and even should consummate into legislation, if indeed our judiciary is going to show contempt for it.

Now, I've got something very strong to state and I obviously could not get into the details. So the best thing for me to do is leave the material with you. I have a publication here where I filed criminal complaints with the FBI from the Department of Justice against a couple of Federal judges. It's gone all the way up to and now in the Supreme Court. So I would like you to look at the material I leave with you, and who do I post it with?

Mr. HORN. Give it to the clerk.

Mr. SCHIFF. And we have the clerk coming up to you right now. We would appreciate it.

Mr. BRANSON. Thank you very much.

Mr. SCHIFF. We thank you, sir. No. 6176.

Mr. KOPP. Good afternoon. Jim Kopp is my name. I am a retired executive of the General Electric Co., but based on the speakers that have been forthcoming, I feel like I'm just a private citizen that just has some complaints or suggestions for the government.

And I guess the main reason is that in the free enterprise system, you are rewarded for saving money, being more efficient, getting things done, and in the government, you are rewarded for being bigger, spending more money, hiring more people, doing all of the things that we all hate as taxpayers. With that off my chest, I get irritated in the government saying that, gee, we can't do anything to cut costs.

I recently looked at a list of foreign aid. There were 45 countries that receive in excess of $7 million a year from us. Most of them I couldn't even pronounce the names of the governments. In checking into some of them, I found that most of them vote against us in all of our attains for getting things done. So I just can't understand.

They all say, well, that's not very much money, you know, a lousy $4 billion for Israel, for instance, or for other countries. And yet it seems like an awful lot of money to me and the one that we should be using here in the United States rather than for foreign countries.

Another example, of course, is in our welfare system, which I'm sure we're all aware of. But recently, I think Reader's Digest published a list of counties in the south, where 80 percent of the children were on disability; not because of being disabled, but because their parents had suggested that they not do well on their tests, so that they would be eligible.

You know, it just——

Mr. SCHIFF. I have to ask if you can reach a conclusion, sir.

Mr. KOPP. I'm all through. I just wanted to conclude by saying we all love this country, certainly I do, and we think our representatives do a good job, but we would think that they could be a little more considerate of the taxpayer and not so considerate about their reelection.

Mr. SCHIFF. OK. 6203. Is 6203 here?

Ms. PYERS. Good afternoon, gentlemen. It's my privilege to be the chairman of the board for the Southeast Los Angeles County Private Industry Council, and I am from the private sector and have a small business in the city of Lakewood.

Mr. SCHIFF. Could you state your name, ma'am?

Ms. PYERS. I'm sorry, yes. Ruby Pyers. I'm concerned about the welfare bill that you currently have and the fact that the Senate decided that they would take the Kassebaum amendments and such, fold them into the welfare, job training amendments and such would go into welfare.

It would appear that Washington feels that the only people who need the support in the way of job training are the welfare people. If you would realize that under the current Department of Labor

JTPA programs that you have and the entitlement programs you have, Title 3 has done a great deal in order to be able to service those individuals that have come from the downsized or what we consider the dislocated people in our community.

For the Senate and Senator Dole to tell Kassebaum that the only way she can get her job training amendments into being reviewed and approved is to incorporate them and roll them into the welfare bill is unfair to the other people who need job training and need the services of the private industry councils throughout not only our State, but through the United States, to have the opportunity to come out of a downsized company and have the services of their local councils to be able to redirect them into being gainfully employed in the community.

It seems to me that if those amendments stay into the welfare bill, it is going to imply at the State level, as we get block grants, that the only people that are going to be available to use those particular funds are going to be welfare people and the people that are going to suffer are those that have come out of the companies that have been downsized, like Rockwell International and the aerospace industries, as well as many other companies in our area that Congressman Horn is aware of.

We've worked closely with him on our recent alumna program. My concern is the fact that the block grants coming down into the State, how much administrative money that the Federal Government plans to give to the States before those block grants come on down to the local levels where they are really sincerely needed.

Thank you very much, sir.

Mr. SCHIFF. Thank you. We have time for perhaps one more now and we will get back to this if there's time at the end. I have No. 6313.

Mr. PETERS. My name is Herb Peters and I am representing myself. However, I am a libertarian. I believe that taxes are too high. In fact, the Congressman said that taxes now are 13 times as high as they were in 1960, and I propose to you that if we cut the taxes back down to the 1960 level, our crime would probably go right back to the 1960 level, also.

Taxes are too high and the government spends too much. On a business day, the government spends a billion dollars a day more than it takes in. I believe that government should spend within its income like the rest of us, but we don't need a balanced budget amendment. The Constitution already speaks to this subject, and I quote Article 1, Section 10, "No State shall make anything but gold and silver coin a tender and payment of debts."

FDR took gold out of our money in 1933. LBJ took silver out of our money in 1968. I think no Republican has done anything to restore intrinsic value to our money.

I would also like to speak a second on the idea of taxation. I believe there is a Godly standard tax. It comes from the Old Testament, when Moses led the children of Israel and it was derived by our minister over at the Rolling Hills Covenant Church, Dr. Gordon Kirk. He says that it should be two-and-a-third tides a year as the Godly standard tax and that should cover our institutes of government, from Federal, State and local and as well as the medical and education institutions and the church.

And I would like—if we're going to have less government, we need to have fewer laws, and I would suggest that we abolish the laws against drugs and prostitution and things like that. Crimes against my own body should not be against the law. Drugs are easy to get. We spend 70 billion a year fighting drugs and they are very available. I have a son that's 28 that gets drugs. He doesn't even have a job. No problem getting drugs.

And take a look at the prostitution issue, drive down Pacific Coast Highway tonight at 8 and you'll see plenty of ladies of the night. So I propose that these things should not be against the law. Those laws should be abolished and quit spending police time and effort on those areas.

And if I can say one more thing on this area of drugs. One-third of our police time and one-third of our judicial time and one-third of our jail space is taken up by criminals who are charged with drug crimes. If we abolish those laws, we would save all that effort.

Mr. SCHIFF. I have to ask if you can begin to conclude now, sir.

Mr. PETERS. Thank you very much.

Mr. SCHIFF. Thank you.

Mr. CLINGER [presiding.] I'm going to ask our final panel to come forward. The first would be Mr. Robert Murphy, who is the senior vice president for organization and human resources for Rockwell International. Second, Sherrill Clements, the executive director of marketing for the Oracle Corp.

Gentlemen, just remain standing. If you have no objection, as you may have heard, we do have a custom of this committee to swear all witnesses.

[Witnesses sworn.]

Mr. CLINGER. Let the record show that the witnesses answered in the affirmative. Welcome, gentlemen. Thank you for taking time out of a Saturday to sit with us and share with us your thoughts and your experiences on the exercises that we're going to be pursuing here at the Federal level. Please, Mr. Murphy.

STATEMENTS OF ROBERT H. MURPHY, SENIOR VICE PRESIDENT FOR ORGANIZATION AND HUMAN RESOURCES, ROCKWELL INTERNATIONAL; AND D. SHERRILL CLEMENTS, SR., EXECUTIVE MARKETING DIRECTOR, ORACLE CORP.

Mr. MURPHY. Mr. Chairman, members of the committee and staff, on behalf of about 82,000 Rockwell people worldwide, I want to thank you for inviting us and our company to address this hearing. Again, my name is Bob Murphy. I'm senior vice president of organization and human resources for the corporation and I'm based in Rockwell's world headquarters, which is just a few miles south of here in Seal Beach.

I have a brief summary statement to present today and, with your permission, Mr. Chairman, I ask that our full prepared statement be included in the record.

Mr. CLINGER. Both of your written statements will be included in full in the record.

Mr. MURPHY. Thank you, Mr. Chairman. Government and industry share many challenges today and many of them are similar. But perhaps none is as complex or requires as much consistent and dedicated effort as the need to constantly improve upon every as-

pect of how we do our jobs in every position of every organization every day. We commend the Speaker and this committee for addressing this issue head-on-head and on benchmarking private industry and others as part of that process.

By way of introduction, Rockwell is a diversified, high technology company with worldwide sales of about 13 billion. We hold leadership market positions in automation, avionics, aerospace and defense, telecommunications, automotive components and printing equipment. Over the last decade or so, the company has made a very dramatic transformation. Today, our commercial and international businesses amount to almost 75 percent of our total sales, and that's up from about 40 percent in 1984.

We've earned our leadership market positions by always striving to be the best. We're committed to challenging the status quo and continually renewing ourselves and improving the value we deliver to our customers. You'd think it's a job that maybe has an end, but it's never ending.

Because of our complexity and diversity, our renewal process is very complex. It's implemented on a tailored basis for each business of Rockwell, and there are many, but there are some common threads. At Rockwell, we're involving our employees in developing a shared vision that says we want to be not among the best, but we want to be the best diversified, high technology company in the world, and let me tell you that's exciting. That's exciting for all of us and all of our employees.

Once the direction is set, successfully renewing an organization is or has been for us essentially a two-part process. First, you need top-down senior executive leadership. Our leaders are facilitators and coaches and we believe in walking the talk at all times, consistently. Equally important at Rockwell has been a bottom-up approach. We listen to, we try to be honest with each other, and our people are empowered to change things for the better. In fact, they're encouraged to do that.

We share with you in our prepared text how Rockwell has been renewing itself over the last decade, in fact, two decades. We classify the renewal in four main categories, and these categories are, first, organization structure; second, changing the management process; the third is corporate and business unit operating style; and the fourth is people.

In respect for the time that is available here, it precludes me from going through all of the categories. So in the interest of brevity, I will speak to only the first two categories. The first category is organizational structure. In the past, we had many organization layers, both in the businesses of our corporation and at our corporate headquarters. This resulted in redundancy of effort, questionable value-added work being performed, and we were too slow in decisionmaking for the fast changing global marketplace and the environment that we're in today.

Today, we're much more flexible, we're much flatter, far quicker to anticipate and respond to business dynamics. We've gone from 123,000 employees generating about $11 billion in annual sales in 1987 to 82,000 employees generating about $13 billion in sales today. That's a pretty dramatic change in productivity and sales per employees.

The second category is our management process. In past decades, we had a somewhat centralized command and control management style. Our corporate mandates literally filled volumes. Today, our business units make a majority of the decisions. We operate with a much less bureaucratic, more entrepreneurial management style. We abhor bureaucracy because it puts control and turfdom ahead of our shareholders' and our customers' best interests. Moreover, the fuel that propels bureaucracy, we believe, is borne in mistrust and we prefer trust, open dialog and understanding to that.

Mr. Chairman, I could go on and on talking about our ongoing transformation and renewal at Rockwell and cover the other two categories, but, again, in the interest of time, I want to conclude with just a few significant lessons that we've learned along the way, which hopefully might be of some help to you and that you might be able to draw upon as you continue your work.

First, the renewal process, we have found, must have clarity of purpose and strong management leadership. At the same time, there must be a process for involving everyone, particularly everyone who holds a stake in that change, and a strong sense of urgency for change is also vital.

Second, everyone must think through carefully who is their customer, then see to it that every action taken adds value for that customer. This requires establishing metrics, because what can be measured can then be improved. Third, all people in the organization have to be encouraged to challenge the status quo. Fourth, it's important to strive to be the best, but you don't have to have all the resources it takes to be the best. And we have found that partnering and out-sourcing with other world class providers for needed technology, product or service and allowing us to focus on our core competencies that add real value to our customers is a sure formula for success.

Mr. Chairman, we at Rockwell hope this testimony and our discussion will help this committee and Congress in your ongoing efforts to reinvent government. Thank you for this opportunity to share our views with you.

[The prepared statement of Mr. Murphy follows:]

Robert H. Murphy

Senior Vice President, Organization and Human Resources
Rockwell International Corporation

Mr. Chairman, members of the committee, and staff ... on behalf of the 82,000 Rockwell people worldwide, thank you for inviting our company to address this hearing.

My name is Bob Murphy. I am Senior Vice President, Organization and Human Resources and am based at Rockwell's World Headquarters, a few miles south of here, in Seal Beach.

Government and industry share many challenges today.

But perhaps none is as complex, or requires as much consistent and dedicated effort, as the need to constantly improve upon every aspect of how we do our jobs, in every position of every organization, every day.

We commend the Speaker and this Committee for addressing this issue head-on by setting forth to benchmark private industry and others with the hope of seeing how the lessons we've learned in restructuring and reinventing our organizations can perhaps be applied to the government.

Let me describe Rockwell briefly -- not to boast, but to set the stage for my comments.

We are a diversified high technology company holding leadership market positions in automation, avionics, aerospace and defense, telecommunications, automotive components and printing equipment, with worldwide sales of nearly $13 billion. Over the last decade or so, the company has made a dramatic transformation -- today, our commercial and international business amounts to almost 75% of total company sales. That's up from about 40% in 1984.

Today, we are the leading manufacturer of modem chipsets for fax machines and personal computers worldwide. We are the leader in factory automation controls for the U.S. market. Our avionics are used by virtually every major airliner worldwide. We are the world's leading supplier of products and systems based on Global Positioning System (GPS) technology. Some 75% of new heavy duty trucks contain Rockwell components. We are a leading NASA contractor, having been involved in manned space since its inception and having built the Space Shuttle orbiter and main engines right here in southern California. And we are the world leader in the manufacture of newspaper printing presses, which are used by the largest newspapers in more than 100 countries.

We have earned these positions by always striving to be the best. We want to create the world's most successful customers, aggressively pursue global growth, execute leading edge management practices and contribute to the well being of our communities.

Our efforts to achieve sustained competitive advantage in our served markets have been greatly aided by the continual willingness of all our people to challenge the status quo and improve the value we deliver to our customers, both internal and external.

Because of Rockwell's complexity and diversity, our renewal process is very complex; it is an evolutionary process and it is implemented on a tailored basis for each business ... but the objective is the same: to <u>improve</u> -- and there are some common threads.

First, it is necessary to establish where the company and each of its businesses is headed. Change for change's sake is of questionable value. Direction and clarity of purpose are absolutely essential.

At Rockwell, we've involved our employees in developing a shared vision that says we want to be THE BEST diversified high technology company in the world. Being the best means, in part, serving our customers better than anybody else and becoming market leaders as a result. And deriving from market leadership is not only world class financial performance, but becoming an organization companies want to do business with and a place where people want to work. And that's exciting.

Once the direction is set, the second important step in successfully implementing change is to get involvement all the way through the organization.

You need "top down" senior executive leadership, which differs in many ways, of course, from day-to-day management. At the corporate offices, our leaders are facilitators, coaches and enablers. Our leaders at our business unit level have lots of autonomy -- they don't use a "cookbook" approach dictated to them by the corporate offices. That's because they need the leeway and flexibility to manage their businesses according to the nuances of the markets and customers they serve.

Equally important in our renewal efforts at Rockwell has been a "bottom up" approach. We have long believed in the need for absolute commitment and total involvement of every one of our people at every level, both individually and as team members. We listen and are honest with one another and our people are empowered to change things for the better. I'll share some examples later on.

For comparison's sake, I want to share with you how Rockwell has continually renewed itself over the last decade or so and will offer some comparisons as to how we were then -- and how we are today -- in **four main categories**.

The first is organizational structure.

In times past, we had many organizational layers both in our businesses and at our corporate offices. For example, between the business unit general manager (profit generator) and the CEO, you often had three layers of management -- each with their own staffs and their own review and approval cycles. This often resulted in redundancy of effort, needless checking and questionable value-added work being performed. Communications also tended to be very hierarchical. This type of organization stifled creativity, accounted for some very high overhead, and was too slow in decision making for a fast changing global marketplace.

We removed two of the management layers eliminating 750 management and executive positions. This has speeded our decision making process and helped us move quicker on market opportunities. You win with speed today.

Today, we're much flatter, more flexible and far quicker to anticipate and respond to business dynamics. In most cases, divisions report directly to our office of the chairman and chief executive officer. Today, we do a lot of resource sharing across businesses and we have formed "centers of excellence" to pool scarce resources for serving several businesses.

In total, we've gone from 123,000 employees generating $11 billion in annual sales in 1987 -- to 82,000 employees generating $13 billion in sales this year. That's a pretty dramatic increase in sales per employee.

The second category is our management process.

In decades past, we -- like many large industrial companies -- had what could best be described as a centralized "command and

control" management style, based on the traditional military model which had been very successful. In theory, our general managers were in charge, but in reality, the corporate staff made most of the decisions. Relatively low delegations of authority to the business units further slowed the overall business process. Monthly operating reviews and management meetings were loaded with staff. And with long range plans, strategic business plans and annual operating plans, those staffs never stopped writing plans. We were heavy on corporate policies and procedures that mandated a lot of "how to's" -- it was a well known fact that those mandates amounted to books some three feet thick!

Today, our business units make a majority of the decisions; only major issues of strategic direction, significant investments, or unusual risk are moved to the corporate office. And ongoing consultation between the businesses and our corporate office is a way of life. Delegation of authority today follows the 80/20 rule; make 80 percent of the decisions yourself and send just 20 percent to the next level. Our planning process is much more flexible. Planning schedules are determined by the type of business; some business plans are reviewed more frequently than others. We have far fewer corporate policies; people have easier, on-line access to the policies that do remain; and we discourage the development of new ones.

We now operate with less bureaucracy and have a more entrepreneurial management style. In fact, we abhor bureaucracy. Too often in the past the corporate staff focused on bureaucratic control and checking on the businesses. Today, that staff is focused on helping each business reach its full potential -- and all staff people must be capable of being coaches and enablers, not critics. In fact, the acid test of our staff's existence is the degree to which they add value to our businesses, our customers and our shareowners.

I've said that we encourage all our people to challenge the status quo. And this is not idle talk -- in fact, we set the example for this right at the top, where the chairman has set up, for this very purpose, a task force made up of business unit presidents and senior corporate staff executives. Their charter: **to change anything that gets in the way of our businesses reaching their full potential**.

I might also add that we clearly differentiate between responsible administrative control and bureaucracy. Responsible administrative control is focused on assuring our shareholders and customers that their best interests are being served. Administrative processes are continually improved to speed delivery of products and services to our internal and external customers. Bureaucracy, on the other hand, often values control for control's sake and protection of turf, rather than the shareholder's and customer's best interests. Moreover, the fuel that propels bureaucracy is borne in distrust. We prefer trust, open dialogue, and understanding.

The third category is business unit operating style, which is closely related to the management process category I just reviewed.

Not more than a decade or so ago, we had a need to further enhance our understanding of customer needs and what our customers considered to be of real value; often we focused on qualitative beliefs but had little hard data on how customers really viewed us.

We generally kept our vendors at arms' length, and often changed delivery schedules on them so frequently it caused them to think that because Rockwell doesn't know what it wants, "we'll ship

when we're ready to ship." Needless to say, our inventory levels were at times too high, which adversely affected our costs and, hence, our competitiveness.

In manufacturing, we emphasized machine utilization and labor efficiency reports and we thought in terms of cost-of-quality. Our attitude toward quality was that our customers will tell us if they're unhappy; 95% acceptance was pretty good; and the process was to inspect and rework as required.

Today, we're obsessed with anticipating, meeting and wherever possible exceeding the expectations of our customers for quality and value. We continue to nurture long-term partnerships with our customers. But we're going way beyond that. We continually survey our customers as to how innovative and responsive we are, and for their assessment of the quality and value of the products and services we provide them.

Literally, tens of thousands of teams work together across Rockwell to deliver the best value in products and services to customers. Often the teams include several departments (e.g. engineering, manufacturing, sales). This team approach begins with our customers and involves our suppliers. We share long range planning data, jointly establish dependable schedules and reduce inspection requirements based on demonstrated quality performance by only the best of suppliers -- those we rate the highest not just on cost, but on quality and schedule as well.

In manufacturing, we're emphasizing total cycle time over machine utilization, and instead of focusing on labor efficiency, we employ activity-based-costing to eliminate non-value added process steps. To sharpen the focus on time to market, our businesses think in "hours' worth" or "days' worth" rather than the dollar value of materials -- both inventory received and

finished product intended for delivery. Many Rockwell businesses deliver finished products or systems on a just-in-time basis; in the case of our sunroof business in Gifhorn, Germany, that's 136 minutes from receipt of order to delivery of a finished sunroof to a Volkswagen assembly line, 10 miles away.

In terms of quality, we're evolved from the "will pass" attitude of the past to the "won't fail" attitude of today. We strive for zero defect performance and regularly speak in terms of failures per million rather than per hundred.

The final and perhaps most important category I'd like to cover is people.

In the past, at our manufacturing locations, people were trained for a specific function or job; our factories often had hundreds of job categories per plant with different pay scales for each job category. The hierarchy was so rigid that if 10 people were laid off, perhaps 150 would be bumped and forced to change jobs. Departmental walls were common, with little communication among departments.

In management, recognition was done via an overall reward system -- after the fact -- with little incentive on the front end. For example, when someone received a bonus, the response often heard by the recipient was, in effect: "How nice. The company must have done well." Cause and effect often was difficult for employees to understand.

Today, our people involvement has changed substantially to reflect our belief that people are our only long term sustainable competitive advantage.

Training now is part of our business strategy and occurs at many different levels. At our Rocketdyne Division in Canoga Park, California, for example, team training takes place at what we call "CPI boot camp" -- the CPI stands for continuous process improvement -- where people from different departments of a business get together and tackle simulated problems with a "hands-on" approach ... all focused on speed, quality, cost and customer satisfaction. Cross training has reduced the number of job categories per manufacturing plant in many cases to two or three, and our factories make available training in a variety of operating practices, such as statistical process control, total quality management, throughput and cycle time reduction and just-in-time inventory management.

In many of our businesses, self managed work teams schedule production, order materials from inventory, evaluate peer performance, and even visit customers periodically to assess their level of satisfaction. Little, if any, supervision is needed. For example, a 28-person team in our Graphic Systems business designed an improved printing press that satisfies the demands of customers in the global market -- demands that include a metric-based design and complying with world safety standards. Compared to the model it replaced, the press has 20 percent fewer parts, requires less assembly time and was brought to market much faster than presses of its kind.

Today, we recognize and reward our people on multiple levels. Compensation for many of our executives is based on a combination of corporate results -- as measured by increasing shareowner value -- as well as individual business unit performance. Others share in Rockwell's success in many ways. We have gain sharing at many of our plants, where all employees share in financial awards above their regular wages when we exceed our plans. We have a company savings plan comprised of

Rockwell stock. Today, 30% of Rockwell's stock is held by employees through participation in the savings plan. And we have non-financial rewards each year in all of our businesses, led by our Engineer of the Year Awards and our Chairman's Team Awards, both of which are very highly sought after within the company.

Mr. Chairman, I could go on and on talking about the dramatic transformation and renewal Rockwell has undergone over the past decade or so. But I want to conclude by offering some lessons we've learned along the way -- which hopefully you can draw upon as you continue your work. I will focus on a **few significant lessons learned.**

First, the renewal process must have clarity of purpose and senior management leadership. At the same time, there must be a process for involving everyone who holds a stake in the change. For example, we've taken great care at Rockwell to involve our employee unions, employee interest groups, customers and suppliers wherever possible in renewal activities. A strong sense of urgency for change is also vital.

Second, everyone must think through carefully -- who is the customer. Sometimes it's an internal customer and other times it's an external customer that buys our products or services. In either case, we need to make sure that every action that we take adds value for that customer. This requires establishing metrics -- because what can be measured can then be improved. And though everyone needs to be on board, it helps to have -- for each process or activity that serves customers -- a "process owner"... that is, one individual who has the ultimate responsibility and accountability for ensuring the process is continually refined for higher levels of performance.

Third, all people in an organization must be encouraged to challenge the status quo at every turn. But more than that, they must have a reason to believe that's not just idle talk on the part of management; there must be mechanisms for speedy implementation of good new ideas, no matter where in the organization they originate.

Fourth, it is important to strive to be the best in the world but you don't have to own all the resources it takes. Partnering and outsourcing with other world class providers for needed technology, product or service and focusing on your core competencies that add value to customers is a sure formula for success. Especially today, when in the business world global competition is fierce -- and within government, dollars are scarce -- organizations simply cannot afford to do in-house those things that can be performed more effectively and efficiently via outsourcing or privatization.

Mr. Chairman, we at Rockwell hope that this testimony will help this committee and this Congress in your ongoing efforts to reinvent government and to continue to improve the value of the services you deliver to the wide variety of stakeholders you serve.

Thank you for this opportunity to share our views with you.

Now, I'd be pleased to answer any questions you may have.

#####

(p:\tkpagel\hill.doc)

Mr. CLINGER. Thank you very much, Mr. Murphy. We appreciate your testimony. We'll have some questions for you in a few moments. Mr. Clements, please.

Mr. CLEMENTS. Thank you, Mr. Chairman. I want to talk in terms of information technology as it applies to reinventing and reorganizing and right-sizing and smart-sizing government. I'd like today to describe some of that technology that Oracle and other members of our industry offer, with a view toward the fact that if this investment is made, then truly the economies and reorganization that are offered in terms of organizational and national policy can be implemented.

Before I begin these remarks, I'd like to briefly describe Oracle Corp., which is a $3 billion corporation, headquartered in Redwood Shores, CA. We're the world's largest supplier of software for information management and the world's second largest software company. We are the first major software companies to implement interactive television deployments and the first major software company to make full-featured products available electronically on the internet, truly a new way to do business. Our company has implemented numerous programs to emphasize and focus our work on customer satisfaction.

We develop and market families of software products for information management on a wide variety of platforms. We operate in more than 90 countries. We have about 17 to going on 18,000 employees as of today and we're in our 17th-plus year of operation, not a very old company for a company of that size.

I'd like to frame my remarks today with three bits of information that I think are very relevant to reorganizing information systems in the Federal Government. The first relates to the use of information technology in the Federal agencies, which has been documented in a recent independent study to show that the organizations in the U.S. Government operate local area networks and use about 50,000 employees for that purpose. These local area networks are essential today to the operation of these agencies because they, in fact, allow the use of communication between computers and between networks and wider area networks. There is technology today that can simplify this operation and dramatically reduce these costs.

The second anecdote derives from information appearing in the current issue of Forbes magazine. That data estimated that there were 5.46 billion documents created in 1994. This would roughly equate to 600 million pages per day, which would fill a file drawer 170 miles long every day. I also note that these statistics show that executives typically spend 150 hours a year looking for lost information.

Since the Federal Government consumes about 12 to 13 percent of the information technology in the United States, that's a massive challenge.

My last data point deals with the shrinking size of Federal Government. OPM, Office of Personnel Management data reflects the total civilian employment in the Federal Government fell from May to May, ending last May, by a point-and-a-half. Within that figure, excluding the Postal Service, the executive branch employment fell 3.5 percent, legislative branch by 7.2 percent. I suspect the work

didn't diminish by that percentage, nor did the expectations of the American public who increasingly demand more of their government and are much less patient and forgiving of processing delays than in the times past.

My point to these examples is that infrastructure costs are high, workload is increasing, staff is shrinking. Technology can help address those problems.

I've got a substantial amount of information in my prepared text, which, as the chairman indicated, has been submitted into the record. So I won't go into it, other than to basically highlight two areas that I think are very significant to information system technology today, essential, and that is the necessity for open and scalable architecture in computers, which will allow computers, from the desktop to the mainframe to digital devices and the like, to all communicate together. That will help get rid of some of those 50,000 employees working on local area networks.

We've also got technology available today that will deal with secure systems, which have not been mentioned today, but are absolutely critical to the Federal Government as it goes about its business of dealing with proprietary information, privacy data in health systems and the like.

There is other successful leveraging technology that's available today. These are such things, as I mentioned earlier, the multimedia, absolutely incredible to extend the access of information to citizens throughout the country. There's also new technology which is breakthrough, dealing with the ability to understand, if you will, English text and language, such that a computer program can actually scan a document and, if you will, understand those words that are in there, not by matching words, but by understanding the meaning behind those words. Very important to getting rid of those 170 mile long file drawers every day.

I have provided you with just a sample of these technologies that we provide and others in our industry. They're available today. They can be applied to the reform effort in the government and this judicious investment can truly advance the ability of the government to provide service to the citizen and still look to economies of cost and operation.

In conclusion, I want to thank Chairman Clinger and the other members of this committee for taking the lead in pushing for commercial product and other reforms in H.R. 1670. Oracle supports your bill and hope that your bill will be successfully retained in the Armed Services Authorization Conference. We believe that it will be particularly helpful to American industry and we're very grateful, and thank you for the opportunity to provide this information.

[The prepared statement of Mr. Clements, Sr. follows:]

THE COMMITTEE ON GOVERNMENT REFORM AND OVERSIGHT
FIELD HEARINGS, LONG BEACH, CALIFORNIA
OCTOBER 7, 1995

TESTIMONY OF D. SHERRILL CLEMENTS, SR.
EXECUTIVE DIRECTOR, MARKETING, ORACLE GOVERNMENT
ORACLE CORPORATION

I want to thank the Committee for the opportunity to be here today to give you Oracle's view of the importance of information technology and how it can assist in reengineering the government. IT is available today that will support the reengineering and realignment our nation's government. The significant nature and extent of change to refine our national policy, meet fiscal objectives, and concurrently provide improved Service to Our Citizens can only be successful through the application of today's available information technology. I would like to describe some of this technology and share with you some of our thoughts on how investing in and implementing this technology can help to achieve this change.

Before I begin these remarks, let me briefly describe Oracle Corporation, the company I represent. Oracle Corporation, a $3 billion company with headquarters in Redwood Shores, Calif., is the world's largest supplier of software for information management, and the world's second largest software company. Oracle is one of the first major software companies to implement interactive television deployments and the first major software company to make full-featured products available electronically on the Internet.

Oracle develops and markets families of software products for database management; tools for enterprise-wide, client/server applications and packaged client/server solutions for business operations.

Oracle software runs on personal digital assistants, set-top devices that are on your television sets, PCs, workstations, minicomputers, mainframes and massively parallel computers. The company offers its products along with related consulting, education and support services in more than 90 countries. Oracle, founded in 1977, currently employs more than 17,000 employees. We hire the top engineering graduates of America's great universities and have attracted similar talent from dozens of other countries.

INTRODUCTION: THE GOVERNMENT DOWNSIZING CHALLENGE

I would like to frame my remarks today with three bits of information related to information systems within the federal government. The first relates to use of information technology within the federal agencies. A recent, independent study revealed that the federal government utilizes about 50,000 employees to administer the Local Area Networks (LANs) for its computer systems. LANs are generally considered communications facilities which allow computers to talk to each other within the same geographic area. This extensive use of human resources is expensive and while those

employees are performing the task of running these LANs they're not directly serving our citizens. Technology available today can simplify these operations and can dramatically reduce these costs.

A second anecdote derives from information appearing in the current issue of *Forbes ASAP* magazine. It cites statistics which will stagger your imagination with the workload we see in paper documents today and, to make matters even worse, the workload to come. There were estimated to be 5.46 billion documents created in 1994. This would roughly equate to 600 million pages per day which would fill a file drawer 170 miles long. There were also estimated to be 11.5 billion pages of faxes created in 1992; by 1998 that number is estimated to increase to 175.9 billion. An average cost to convert those papers to electronic forms is about 25 cents per page. By the year 2000, only 5% of our data will be stored in computers. Studies show that the federal government consumes approximately 12-13% of the U.S. information technology consumption. You can see the size of the problem if our government does not avail itself of technology soon.

My last data point deals with the shrinking size of the federal government. Data released by the Office of Personnel Management reflects that total federal civilian employment fell by 1.5% from 5/94 to 5/95. Within that figure, excluding the Postal Service, Executive Branch employment fell 3.5% and Legislative Branch employment fell 7.2%. I suspect that the work did not diminish by that amount, nor did the expectations of the American public who increasingly demands more of their government and are less patient and forgiving of processing delays than in times past. My point to these examples is that infrastructure costs are high, workload is increasing, and staff is shrinking. Technology can, and must, be applied to mitigate these problems. I would like to describe available modern technologies that can be applied to solving these information challenges.

OPEN, SCALABLE ARCHITECTURE

Our country, and the information industry, are today in the third phase of our journey along the information highway. We have moved from the initial mainframe environment onto the desktop, and are now in the network computing environment. That's why the federal government has 50,000 LAN administrators. The business operations of government cannot take place in one place, or at one time, or by a restricted set of people. We need the harmonization of the mainframes' data, and tools of PCs and workstations on the desktop, and the ability to work together and share information. This is possible only through the use of networks. Open systems are designed to get past the hurdles imposed by these diverse systems by using agreed-upon standards for interfaces and formats that support interoperability.

At Oracle, we define "open" to mean that software should operate seamlessly with software from other vendors. Whether agencies are implementing client/server, linking a variety of hardware systems of different sizes from different vendors, or adding new

systems to their existing installed base, they need open architectures. Our technology has been designed with this in mind and is available today to be applied to these situations. The payoff from open architecture is that you can now tailor whatever combination of new and existing production computing systems agencies have in place into a flexible network that meets federal agencies' needs. Because it is fully scalable and portable, our technology affords the ability to merge different types of computers, operating systems, networks, databases, and graphical user interfaces into a unified, cooperative-computing and information-sharing environment. Existing investment is protected and options can be kept open for the future. As needs for processing power grow, agencies can continually scale up by adding servers, network protocol support, and even another database management system as even newer technology becomes available.

MIGRATION WITH A ROAD MAP

Most government computer managers, though still committed to an installed base of mainframes and their associated applications, are investigating cost-saving alternatives to their current mainframe system environments. Realizing both the benefits and potential risks of a move to client/server computing, they are searching for the right mix of open and legacy systems - a mix that supports their business requirements with the most productive and cost-effective solution. A successful open systems implementation can mean a tremendous payback in cost savings, application development, and improved productivity, both for the information systems department and for the agency's entire user community.

When agencies move their applications from mainframes to smaller, more economical computers it is called migration. Migration can be a significant challenge. It requires the migration not only of data, but also of hundreds, even thousands, of application programs - all while users continue to have access to the data they need to do their job. For that to work, mainframes and open systems are going to have to do more than just coexist; they're going to have to interoperate in a way that not only maintains, but actually improves the performance experienced by users during the transition.

As applications and data are relocated from the mainframe to open systems, agencies must find a way to connect mainframe data and applications with the open systems environment. Once agencies have integrated their mainframe data and applications into the client/server environment, they have the interoperability needed for an enterprise-wide solution. This technology is available today and allows our government clients to plan and execute their system modernizations with reduced risk and continuous data availability in ways that were not possible in the past.

SYSTEMS ADMINISTRATION

Oracle has also developed a new systems management architecture. We call it Mission Control. This is the technology which supports both improvement in system quality and

reduction in the staff dedicated to supporting network and computer administration. It is also a significant piece of the architecture allowing organizations to migrate toward unattended, or "lights out" operations capable of being administered by a staff centralized for an entire organization rather than being repeated geographically. Dramatic savings can occur when this technology is implemented.

Open architecture enables tight integration between yet another new technology we call the Oracle Intelligent Agent and 3rd-party tools for hardware and operating system monitoring. An agent is an independent software program that provides system managers and users with the capability to automate routine tasks without human intervention. We apply this technology to database activity and support performance information which can now be correlated with system, network and hardware-level management data enabling comprehensive, integrated and proactive administration of the complete Information System.

Since well over 80% of federal agencies report they are operating major database systems, savings in the operation of these information systems is significant. Database administration becomes much more effective when it is coordinated with system and network management. By integrating hardware and Oracle database monitoring, we provide customers with a complete set of management information to be used for system tuning, auditing and capacity planning. We refer to this technology as the Enterprise Management Platform, which integrates third-party tools and support of leading systems management frameworks. This new systems management strategy aims at improving the quality and effectiveness of database administration while reducing its complexity and cost.

APPLICATION DEVELOPMENT THAT PUTS USERS FIRST

No matter which migration path chosen, agencies will need to decide how to develop and maintain applications on the new system. Technology is available to develop client/server systems that let government agencies manage all their information. Whether the work involves Windows, Macintosh, Motif, or character mode workstations, users can work in their most familiar environment, yet enjoy the power of the world's premier application development environment. With a single set of source code, organizations can build applications for all the enterprise platforms of today, with the assurance that all tomorrow's technologies will also be supported. What this means is that this technology supports current investment in workers' skills and existing systems while enabling agencies to make their best economic decisions on computing platforms, networks, and deployment.

SECURING THE DATA WITHOUT SHACKLING THE USERS

By their very nature, government agencies are called on to handle secure, sensitive, or proprietary information in their computer systems. The content and sensitivity of this

information vary and can include everything from tax records, corporate regulatory filings, and medical information to classified military secrets. At the same time, government, like the rest of the economy, is increasingly moving toward open computing. So the need to protect sensitive data must coexist with user demands for quick and easy access to data as though it were on a single computer - even when it is distributed across a variety of mainframes and servers.

Our technology - the secure version of the Oracle database management system - provides security without compromise. It provides the high security required by government applications that process sensitive, proprietary, or classified information, while providing all the functionality, performance, portability, and interoperability agencies need for their mission critical information systems.

EXTENDING SECURITY ACROSS THE NETWORK

The 50,000 LAN administrators I mentioned earlier are working on these ever-increasingly sophisticated distributed systems. There is an increasing need to distribute data through both local area networks (LANs) and wide area networks (WANs). With the increased distribution also comes a significantly increased exposure to theft or modification of data during transmission. Oracle has introduced technology today which has significantly advanced the state-of-the-art security in the client/server arena. Secure Network Services allows customers to easily protect the valuable data traveling across their networks from eavesdropping and data modification by unauthorized third parties.

While our technology provides the high levels of security required within the data management system by government agencies, one area that has remained vulnerable to unauthorized access is the communications infrastructure that carries data between these secure "islands." This lack of communications security is exacerbated by the increasingly distributed nature of modern information systems. We offer technology today that lets agencies easily and cost-effectively protect data as it travels anywhere on their networks.

MAKE FUTURE SHOCK A THING OF THE PAST

Just because you don't know the future of computing doesn't mean you can't plan for it. With the right architecture, technology available today, and partners, agencies can be ready for just about anything the next wave of information processing brings. Who could have predicted how important multimedia would become just a few years ago? As I indicated earlier, more than 90 percent of all data is unstructured - text, images, multimedia. Today's technology gives organizations full control over this unstructured data.

For example, we offer a suite of software, which includes our database, allows customers to store and retrieve audio and video as well as structured data and text. In the near

future, when the Media- Server is integrated into the enterprise, it will, in effect, allow anyone to access any data any time from anywhere across the organization.

Oracle has developed a powerful new language processing technology will make the process of managing unstructured data easier for government computer users. ConText is able to identify themes and content in the English language text and extract the information specified as of interest to the user. For example, Oracle ConText can "read" a number of documents and systematically condense them into summaries and outlines. Examples of the documents that Oracle ConText can analyze include legal documents, patents and patent applications, technical and scientific journals, and newspapers. This is breakthrough technology which can be applied to making information out of the data in those 5.46 billion documents I referred to earlier.

Object oriented databases represent promising technology which can hold the key for uses of complex, multi-data type environments, such as health information where the ability to look at all the data about a patient as an entity or "object" is so critical. Patient data today comes from structured data bases such as financial and administrative systems, radiology, analogously and spatially from measures and tests, in video from telemedicine and teleconsulting advancements, and in audio from dictated notes and measures. For example, wouldn't it be wonderful if our family doctor could listen to our heart and, if heart tones were atypical, forward those actual, recorded tones to a cardiologist for special consultation without having to schedule another physician, move the patient, or redo tests already conducted.

I have provided you with just a sample of the technologies available today for application to the reform efforts in the government. Judicious investment in these technologies, coupled with partnering between the government and industry, can effectively advance the ability of our government to truly provide Service to the Citizen and still look to economies of cost and operation.

In conclusion I want to thank Chairman Clinger and the other members of this Committee for taking the lead in pushing for commercial product and other reforms in the bill H.R. 1670. Oracle supports your bill and hopes your bill will be successfully retained in the Armed Services Authorization conference. Candidly we believe that your bill is superior in some respects, particularly the protest area, than alternatives proposed by the Senate. We believe the reforms in H.R. 1670 and last year's FASA bill will advance the taxpayers interests. Thank you again for the opportunity to provide this information to you.

Mr. CLINGER. Thank you, Mr. Clements. Mr. Horn.

Mr. HORN. Thank you very much, Mr. Chairman. Mr. Murphy, I've got to ask you a question first. At which California State University campus did you receive your degree?

Mr. MURPHY. California State University at Long Beach, proud to say.

Mr. HORN. I knew based on the quality of testimony that that must be true.

Mr. MURPHY. Thank you, Congressman.

Mr. HORN. We're delighted. Since you represent one of my favorite corporations and that corporation has been very good to higher education and you're CEO—Mr. Beal, whom I did ask originally to testify or get someone on his behalf, happens to also be a California State University graduate of the San Jose campus. We're always delighted to see people from Rockwell.

Mr. MURPHY. Thank you.

Mr. HORN. And I was tremendously impressed with your information and presentation, also. But you're going to have to educate me where Redwood Shores is?

Mr. CLEMENTS. It's 10 miles south of the city of San Francisco.

Mr. HORN. I see. OK. Well, that made a little sense. There's a redwood tree somewhere around there. I know there's Redwood City, but it threw me a minute. Let me ask y u both the same question, because you're right there on the curve of where you get something done in private industry.

What were the greatest difficulties you had when you were trying to downsize and change the organization and how did you solve that difficulty? Mr. Murphy, do you want to start on that one?

Mr. MURPHY. Yes. The greatest difficulty, I think, was being real clear on our purpose and convincing people—which I believe you have to do, you can't dictate change in an organization. You can, but you won't get there, I don't believe—is convincing—was convincing people or all of our people of the need for change. In order to do that, we had to be very clear on our purpose, its intent, where we were going with it, which was essentially to focus on our customers and our shareholders, and providing added value for them at all times.

This took a tremendous communication effort with all of our employees to understand this and to want to bring it about. It takes a recognition that change and reinventing your organizations—you know, as I look at the job of this committee, it's very humbling to me because it's such a mammoth task compared to Rockwell. But we had to recognize and we had to learn the hard way that people have to buy in. Change is uncomfortable. It's not natural. People strive all their lives to bring stability to their lives, to be comfortable with what they're doing, and to change is just aggravating, agonizing for them.

So our job is to make them comfortable with that and to free them up and to encourage them to question the status quo, which we've done. But that was a very difficult time and it took us quite a few years to establish that throughout the company.

Mr. CLEMENTS. Well, as I indicated earlier in my testimony, Oracle is just about 18 years old and we've had the luxury, except for one small period of time, to continually be growing. But approxi-

mately 2 years ago, an element of operation in our corporation that became necessary for us was the need to globalize our operations. We operate in about 90 countries.

What we were finding was our operations, in terms of our dealing with our customer base in these 90 different territories, was going on in 90 different fashions. And so in our smart-sizing, if you would, we embarked on a globalization effort, which we believe has been highly successful, which allows Oracle's visage to be the same around the world and allows us to have consistent customer interaction anywhere where we're doing business.

Mr. HORN. One of the difficulties that corporations have faced when they're downsizing is that many of their component parts, either as they acquired different companies and tried to integrate them into their own system, have completely different corporate cultures and I just wondered to what degree did you take that into account? Did you survey the employees and how did you deal with any problems that arose from completely different corporate cultures within the major organization?

Mr. CLEMENTS. As you may recall from the press, we recently acquired a substantial portion of a business dealing with data warehousing technology and I think the approach for that has been quite a good one in that we began to actively intertwine the people of this new organization with ours. We had a formal program of helping them understand our corporate culture, of listening to them. We asked them what their goals were. We did human resource leveling, if you would, with regard to those kinds of activities.

Of course, Oracle has not been a company that has had a great many acquisitions. Most of our effort has been done—we've done it on our own. But this one is a good indication of the fact that if you involve people early on in merging corporate cultures, and we did this also with the RDV product, I think you will find that, as we did, that people will be happy to be a part of it if you ask them and make their desires, to the extent you can, part of the business base.

Mr. HORN. Mr. Murphy, do you want to comment on that? We're very proud to have the Rockwell Space Systems Division and Dr. Bob Minor as its president in the 38th Congressional District. We have made it expand forever and not decline.

Mr. MURPHY. Yes, we hope so. We hope so, too.

Mr. HORN. Winning that contract.

Mr. MURPHY. I was going to mention that of our 82,000 employees, we have about 17,000 in California and about 3,500 in your district and we hope it will grow, too.

Rockwell has grown through both internal development of our businesses, which has been the first priority, and, second, through several acquisitions. And if I look at Rockwell's nine principal businesses, for the most part, each one has its own—is a franchise of its own. It grew from an entrepreneurial business to a large business and very successful. They're market leaders, and with this came periods of time where their own cultures developed.

We believe that these cultures are a lot of the reason that they are where they are now. So we have not tried to take away or to merge our cultures, but rather to build on the strength of those cul-

tures. We have found, in a company like Rockwell, which is diverse and in so many different markets, that you really can't cookbook a transformation and reinvention of your organizations and there really just is no silver bullet for change. We've tried it, we've tried to find it and in those cases where we have, it just hasn't worked.

But what we've attempted to do is to keep focused on, across the company, values like serving customers and shareholders. That's our principal job. Adding value to those customers and shareholders, helping our customers reach their full potential, and freeing up people to participate and feel accountable for the work that they do and for reaching their fullest productive potential.

We believe that this is a winning formula and this is consistent across the company. But within those values and principals, every business has different ways of bringing about their transformation and reinvention.

Mr. HORN. One of our difficulties is obviously the Congress is a separate branch of government as opposed to your board of directors, which can delegate to the administration, getting the job done. We're in the situation where, if an executive branch, for political reasons, winning elections or whatever, regardless of party, wants to object to that, you have a real problem in downsizing because there's no cooperation in terms of working with the employees at the grassroots, having those ideas flow up.

Now, under the chairman's leadership, we've held a number of hearings to be supportive of Vice President Gore's efforts, because we, frankly, don't think the administration is paying too much attention to his efforts. We think they should and those efforts are designed to obviously help achieve some of the goals you and I would agree on, whether it be a private business or a public entity.

So do you have any advice, if you were in our boat, with fragmented government control in the sense of constitutionally separate legislative branch, constitutionally separate executive branch? What's your advice to work our way through that situation?

Mr. MURPHY. Well, that's a difficult one for me. I would attempt to answer that, but it's difficult because I've spent 34 years of my life with Rockwell and have been focused on products and customers and providing an environment for people where they can reach their fullest potential. That's really been my focus. I just haven't been there in terms of good government and don't pretend to be any kind of an expert at all in terms of how the departments run and how you might go about downsizing.

As I've thought about prior to coming here, there are such tremendous differences, as you point out, in governance. We have our board of directors and we make recommendations and they approve or they don't approve, but most of the times they approve, if we've earned their confidence, and that's what we have to do.

Also, we can take actions and there are measurements on everything we do. So there is fast feedback. So we take actions. The feedback is we either did or we did not or were successful or were not successful and if we weren't, somebody else takes our place. You don't have that. So it's very difficult.

Mr. HORN. We're trying to get there, may I say. We've looked at Oregon and other States that are way ahead of the Federal Government in benchmarking, establishing performance systems, and

we have passed the Government Results Act and other things, under the chairman's leadership, that will eventually give the executive branch those targets to be moving toward and it will be much more like what you go through regularly and anybody that runs an organization would do it that way.

Mr. MURPHY. Right. And I'll tell you, we are so supportive of what this committee is doing and what Congress is doing and we just totally support you and are very encouraged by what we're seeing.

Mr. HORN. Thanks, Mr. Chairman.

Mr. CLINGER. Mr. Schiff.

Mr. SCHIFF. Thank you, Mr. Chairman. I'm going to be very brief. I just want to make the observation that I think this has been some extremely important testimony. Of course, all the testimony and all the statements from citizens is important, but there was a very clear focus on two things here. The first is, from Mr. Murphy, what Rockwell went through is what we're trying to go through. In other words, what is it you're trying to do and decide that first and then decide how to get there.

In our case, the stockholders, the shareholders, as you described them, are all the taxpayers and the customers are those portion—actually, all the taxpayers again, but in those programs that we are endeavoring to provide. It seems to me you start there. You start with how do we best serve the people we're supposed to serve and then you can start looking at what programs should we have and what size and so forth.

So I'm sure that was not an easy process for Rockwell, because certain ways of doing things became entrenched in a large company, as they have in the government, but it's something that has to be done.

And the other, Mr. Clements, I want to say that I think if this leadership is going anywhere—we all know that policies are always debatable, what programs to have, not to have and so forth, how to fund them. You've heard the debate with us here today.

But I want to say if this leadership is going anywhere, it is going toward the use of technology in the Congress itself and then in the Federal Government. For example, this is just one example, the congressional leadership is trying to put us all on-line. It sounds like a rather primitive concept now, does it not? But we're still not there. So we still have, for example, if individuals want copies of bills, they write to us, we get a copy of the bill from the Government Printing Office or wherever it might come from, we mail them a copy of the bill, and so on and so forth.

We ought to be on-line, so that if anyone wants to read a copy of a bill, presumably they have a computer terminal, they just read it the same as we read it. Similarly, we get questions about how we vote and so forth and a little of that is covered in the news media, but given the many hundreds of votes that we cast, actually very few are reported because the news media is limited in its time and space.

There is no reason why there can't be an instant access to that. If you want to know how we voted on a certain bill on the House floor or in a committee, just access to it. That by itself would save an enormous amount of time, energy and motion that we just don't

need to be doing. I'm just convinced that—now, I have to tell you. My brother holds a Ph.D. in physics and lives here in southern California, lives here in the Los Angeles area. He doesn't know whether to laugh or cry that I, a lawyer, am a chairman of a subcommittee in science. But the fact of the matter is I may not be as technically trained, but I've got the idea and the idea is that technology could increase productivity. And it's already been demonstrated across the board in private business and we can adopt that, too, and that's without getting to the policy differences that may separate us as legislators. We ought to have a common interest in using technology to increase our productivity and I think that your company is demonstrating that usefulness to 90 countries right now and hope you'll continue to demonstrate it to us.

Thank you, Mr. Chairman. I yield back.

Mr. CLINGER. Thank you. I might announce that we are coming sort of kicking and screaming into the 20th century in our committee. We are now on the Internet and we have a home page on the Internet and one of these days I'm going to learn how to get to it myself.

Just a couple of questions, gentlemen. One, you indicated, Mr. Murphy, that you had a substantial downsizing as a result of the reorganization. How, in terms of the human resources that had to be let go, how was that transition affected? What sort of efforts were made to ease that transition?

Because I think the administration says 250,000 Federal employees would be gone by the end of this term and we have even perhaps more grandiose ideas than that, but there is the human cost.

Mr. MURPHY. There is just no question about that. Downsizing is not free and substantial downsizing, as we have gone through, even though it's been over a period of a lot of time, 10 years, is just agonizing. Again, there's no silver bullet to this, but there are some principles that we followed that I think are very important.

One is don't surprise people. Be up front. Communicate to them way ahead of the downsizing what you're doing and why. We found that if you do this and you're up front with people and give time, that they can handle that kind of bad news. It's never easy. They're not happy with it, but they can manage it. So we have tried to do that.

I can remember back in the days when I first joined the company. In aerospace, we'd have reductions. This was back in the 1960's. We'd have reductions because a program would get canceled or something and we'd have to tell our people well, it's Thursday and Friday morning you're going to have to clear out. We just don't do that. There is a cost to that. But we give time and, again, we try to be up front with them.

Second, we're respectful of our people, respectful of what they're going through. We have spent a lot of capital on outplacement centers, which would, first, give them visibility throughout the whole company, around the world, in terms of open job vacancies; second, give them training on focusing on their strengths and making those strengths available outside in other jobs and how to focus on that and how to market those.

Third, we've invested in training for our people, where they need new skills, like information technology skills, programming and

that kind of thing. As I said, downsizing is not free. It's expensive and we have invested heavily in it. I think it's paid off for us and our people.

I think the one thing you have to remember, and I think sometimes companies forget, is that the people that stay are the ones that are going to cause you to be successful and they're watching all the time. Their morale is going to be determined greatly by how you handle people and how you handle cutbacks. So I think that's very important.

Mr. CLINGER. Thank you. Gentlemen, both of you, thank you very, very much for taking time out of your Saturday to come and share your views with us. We really appreciate it.

We now come to the final portion of this hearing, which is another session for those who are left in our audience to give us their views. I'll ask Mr. Schiff to pull a few numbers and call them out.

Mr. SCHIFF. Using the last four numbers, 6172. Not seeing anyone come forward, 6185.

Mr. HORN. Mr. Chairman, while someone is coming forward, I'd just like to recognize that the Mayor Pro Tem of the city of Downey, where this committee has stayed overnight and loved the city, Joyce Lawrence is here and I hear, Joyce, you don't want to speak, but I just wanted them to know you.

Ms. LAWRENCE. Well, I just came to listen, but I have my ticket.

Mr. HORN. You're trying to win the lottery.

Mr. SCHIFF. I'll call numbers as fast as I can here. 6169. If 6175 is here, you might start coming down, because that's the next one.

Mr. VON MOUT. Thank you. I came to speak on an entirely different subject, but Mr. Murphy and Mr. Clements——

Mr. CLINGER. Could we ask you, sir, if you'd say your name first and if you have any affiliation.

Mr. VON MOUT. I'm Patrick Von Mout, chairman of the board of the National Health Federation, the oldest health organization in the country. We are fighting the FDA most of the time. They seem to do things that we don't like. But, Mr. Murphy, I'd like to let him know that as an airline pilot and as a military pilot, I've used a great many of his product, found them very reliable. For Mr. Clements, before Oracle ever arrived in Redwood Shores, I bought some homes out there, hung onto them, and now whenever my grandchildren want to go to college, I sell a house or put one or two of them through school.

I know this is not the jurisdiction of your committee, but I would ask you to go back to Washington and tell your cohorts that they fired the wrong people when they cut back. Not that I'm against the cutback and each and every Senator and Representative had to make the decision of who to let go to get down to the goals.

But the people that were let go were the ones that I had been talking to all of last year while we fought the Clinton health plan and tried to support the Hatch-Richardson vitamin mineral bill. And the people in the front line, the ones that answer the telephones, there used to be two people in every office answering the phones and meeting you when you came in the door. Now, you're lucky if there's one and sometimes, at lunchtime, there isn't anyone.

So the people that the public meets are the ones who were let go. Excuse me, I have a back spasm right now. But we just need to have access to people in the office. We don't necessarily have to talk to the Senator or the Representative, but we do need to talk to the staff member and it's very discouraging to have to spend 2 or 3 days on the phone getting someone to talk to you. So if I may, go back there and tell them that. And you may have fought that fight in your own office.

The other thing is that I look through all of the departments you're going to do away with and with the exception of safety, I would ask that you get behind Congressman Bliley and Congressman Bilirakis and do away with the Food and Drug Administration and their gestapo tactics of raiding doctors and manufacturers of vitamins and minerals. They don't seem to pay any attention to the pharmaceutical companies that kill people or the doctors that kill people, but, boy, let some alternative physician make a mistake on his paperwork, and they're down there trying to throw him in jail.

Thank you.

Mr. CLINGER. Thank you very much.

Mr. SCHIFF. 6175.

Mr. GALE. My name is Kent Gale and I'd like to talk to you about, I think, welfare, both for corporations as well as for poor people is bad in terms of it removes the natural consequences of their actions and produces distortions which creates, in my view, most of the time, more problems than it solves.

Like, for instance, when you subsidize farmers and ranchers for growing animal products and make meat a loss less expensive than it would be in a truly free marketplace, people consume more of those products than they otherwise would. And we have a lot of extra health problems because of that and a lot of extra health costs. I think that it's also a problem with poor people. I work myself trying to help poor people and often when the government is subsidizing their problems and their bad habits and whatnot, it removes the impetus for change.

I think often that government is cutting off the bottom rungs of the ladder to success for these people in terms of things like the minimum wage and also a lot of the zoning and building code laws, which, for instance, there is an organization called the Bible Tabernacle in Venice, CA, where they help homeless people and give them job training. They have them studying the bible and a lot of these people were former drug addicts and criminals and they get out and get a job and become productive, and the government tells them that they can't allow them to sleep within their church sanctuary because it's not zoned as a residence.

There are a lot of these sort of interferences that—like the Reason magazine one time did a study comparing areas with zoning and building codes with those without, comparing the safety records and what differences there were in essentially the same safety record. It was just that it cost about twice as much to build in areas with the zoning and building codes and zoning regulations.

There are a lot of reasons that—you know, areas without building codes for zoning people look more carefully into the contractor and persons doing the building and they might have somebody independently check it out in areas where they do have those extra

laws. People just rely on the government to take care of it and often there are things like bribes and things like that that cause there to be problems there that there shouldn't be.

Mr. CLINGER. Can I ask you to——

Mr. GALE. OK.

Mr. CLINGER. Thank you very much. We don't have much to do with building codes, but I think the principal applies in many areas.

Mr. GALE. I understand. Thank you.

Mr. SCHIFF. 6170. 6196. And if 6184 is there, you might start coming up front.

Mr. WEBER. Good afternoon. I'm Bob Weber. I'm the chairman of the Libertarian Party of L.A. County and I would like to urge you to consider withdrawing American troops from overseas. In particular, I think that with the demise of the Soviet Union is that there is no country in the world which poses any conceivable military threat to the United States and that much of our military spending is now essentially a jobs program in search of a purpose.

In particular, we still have 65,000 troops in western Europe and a great many troops in Japan, with nothing to do, and in order to justify keeping these troops overseas is that the United States is now intervening in places like Bosnia, Somalia, and Haiti, where there is no conceivable strategic interest on the part of the United States.

And I would also like to recommend to you a CATO Institute policy analysis which recommends that the United States withdraw from NATO and it makes a good case that our military or that our national security would actually be increased by doing so. I recognize that there are some people who are very appalled at what goes on in places like Bosnia or places like Haiti or Somalia and they want to do something good, but I think that it's fundamentally unfair to take money from taxpayers, which, after all, is—we don't pay taxes voluntarily, and use it to try to do good around the world when there is no benefit to the people that you're taxing.

And so far as actually intervening or actually doing good in these countries, I would like to suggest that they try to do so privately. If anybody wishes to strap on a parachute and sling an M16 over their shoulder and dive into Sarajevo, I would applaud their courage, although I would actually question their judgment. Thank you.

Mr. CLINGER. Thank you.

Mr. SCHIFF. I believe 6184 is at the top of the stairs there. You have a microphone.

Mr. COSTANO. My name is Ernie Costano. I am a consultant and counselor at the Disabled Resource Center in Long Beach, also a member of Californians for Disability Rates. My concern is that with the downsizing that you're speaking of is cuts in Section 8 housing and HUD housing and the ramifications of what could happen with that of people becoming homeless, because you can't really live with a check of $615 and be able to rent fair market value rentals.

So that we do need this subsidized housing and we just can't—we want to avoid—we want you to keep intact the Brook amendment. Also, I'd like to speak on cuts on SSI. I have a client at the Disabled Research Center in Long Beach who receives $614 a

month, and she has to resort to selling her plasma at the end of the month just to get by.

This is unfortunate. And now that the Governor is proposing SSP, State supplemental portion cut in her services or rather her income, it will be a $30 reduction. What more will she have to sell? How will she get by then? This is a true story and I can verify it.

But touching bases on that, the main issue the downsizing, it seems it's going to be hurting the elderly, the poor and the disabled and I really want you to look into it for us because we can't afford any cuts. Thank you.

Mr. HORN. Let me just say on that last comment that it simply isn't true. It will not harm the disabled and the elderly. What it will get at—it happens to be a good friend of mine, as chairman of the Authorization Committee on Section 8, and what we are all after and what we all hear complaints about from our constituency are the young people in their 17, 18, 19 years of age that have often come into these Section 8 housing projects. Members of gangs disrupt the complete peace and quiet that the residents would like to have, and we are going to be dealing with that and we're going to try to stabilize this situation so that people that do need help, not the people that are scamming.

And I will tell you that while a lot of people on SSI deserve to be there, a lot of people are committing a major fraud of the taxpayers who are on there and we need to separate that out. That's the job of the administration to do. So I don't think you have to worry, if one has a serious situation in disability or one is elderly. We're trying to clean up some of those projects the best we can do by legislation and mandate that the administration carry out the law and keep the gangs out of those projects.

Mr. CLINGER. Thank you. 6305 and 6194 would be next.

Mr. BRIGGS. Thank you. My name is Rod Briggs. I speak for myself. I spent many years doing acquisitions, over 200, for a major corporation, worked through three downsizings. I commend your efforts here. It's interesting that in business, we looked at a book called "Mega Trends" back in 1980 that predicted many of the things that are happening today. Businesses look forward to trends and some of the trends that are now coming to fruition with the government need some strategic planning.

I would hope that you people who are now looking at the polls possibly with some down—some dissatisfaction, if you will, appearing in the polls, will not be discouraged from your task, because your task is being listened to by your customers, the consumers who are watching, CNN, On-Line, talk-back shows. People are becoming much more involved as the citizens wanting common sense results.

Downsizing, redefining government, very important and I commend you. Thank you.

Mr. CLINGER. Thank you, sir. 6194. 6311. Ah, the mayor. We got you. I was going to exercise my prerogative and give you the chair here at some point.

Ms. LAWRENCE. Thank you. Joyce Lawrence, Mayor Pro Tem, the city of Downey. I did not plan to speak today. I came to listen and I feel like I might have better input for you by talking now than at the beginning. Talking about block grants and change, I think

people—the question you just heard—we want our government lean, but we want to make sure it's not going to mean.

I think public hearings like this and the information that Congressman Horn so faithfully sends out and has published does a lot to explain what you're really trying to do.

In our city, and I'm not speaking for city government now, I can only speak for myself, but in our housing division, where we have block grants from HUD, I do know that we spend an inordinate percentage of the money we get just administering it, which means filling out all the paperwork and the rigmarole that goes with that. I think you can trust us at the local level to spend that money—return it to the citizens in an appropriate way, if we will just kind of take off some of the reporting restrictions.

And when Congressman Horn was asking about should there be a cap on it going to the States so it goes to the right place, yes. A post-service audit versus ongoing documentation, yes. Revenue sharing returned to, yes. And we do want the flexibility to achieve those program goals without all the reporting. It just stymies everything. And the same in our planning division. We have staff that spend all their time just meeting all the air quality and all those other reporting things.

We're there. We'll take care of our environment. I think we do a pretty good job of it. I guess that's really all I wanted to say. Thank you very much.

Mr. CLINGER. Thank you very much for your comments.

Mr. HORN. While the chairman is picking the next number, I'd like to introduce State Senator Theresa Hughes, long-time advocate of public education in this State and our neighbor slightly to the northeast or west. Welcome, Terry. If you'd like to say something, we have usually a shot of a minute, minute-and-a-half.

Ms. HUGHES. Thank you so very much, Congressman Horn and Mr. Chairman, for giving me an opportunity just to add my voice as a "me too," expressing concerns about what you're going to do and cautioning you to make careful that we all want smaller, more efficient and less wasteful Federal Government, but caution you to look at what we could cut and how it might affect us.

Think of all of our crumbling highways, our prohibitively expensive health care and college educations, highly polluted cities, heavily unkempt, even closed national parks, and dangerous airlines flying in our skies. We need to live in a country where government does not protect the health and the safety of only some citizens, but of all of our citizens.

To that end, I am sure that you will attempt to cut waste and not vital and necessary programs that impact our lives daily. Yes, my senatorial district is just directly north of this community. I represent 714,000 people and I have an ethnically diverse population. But we here in this area are just reeling from the aftermath of cuts, the closures of our plants, the proposal for closure of the Naval Yard and many businesses exiting our community.

We are really plagued with urban decay, high unemployment, and crime rates are just soaring. So as you cut and you do this necessary surgery, make sure that you leave the vital organ mechanism to make us be able to survive in our communities. Just two things I want to single out to you to look at. The fact that I was

informed that we have 140 million from the Federal Office of Family Assistance for use in counties for juvenile assistance centers, residential treatment centers, foster care and aftercare services, juvenile camps and ranches. Be careful when you look at those. Be sure that you know what kind of risks we are going to run.

The other thing that the Governor shares with me and the other people in our State is drug-free schools and safe schools and safe communities. In California alone, these cuts eliminated a total of prevention and intervention programs for 55,000 students in our State, all student assistance programs for 3,000 at-risk students in our State and all programs supporting life skills education and parent-family education, all individual and family counseling, and many school personnel training programs.

In fact, all of the programs established by Governor Wilson to make California schools safer and drug-free are also in jeopardy. So please help us. I have enjoyed working over the years with Congressman Horn, as he continues to care about education and the kinds of opportunities an educated populous is afforded by being productive citizens of our community.

Thank you very much. This is the first time I've ever spoken before a congressional committee and I think it's wonderful that you have time limitations. I wish we had the same thing at the State level. Thank you.

Mr. CLINGER. Thank you very much, Senator. Appreciate that. We have, unfortunately, come to the conclusion of this hearing. It is now 2:30. We have had some remarkably excellent testimony, diverse testimony. I think we've gotten a lot of very good suggestions throughout the day. As I said, we were in Seattle yesterday. We'll be in Albuquerque tomorrow. So we're getting a very good cross-section of opinions and some excellent suggestions.

Before we conclude this hearing, I would want to, on behalf of the entire committee, thank Wally Bobcowitz, who is of the city manager's office, along with Connie Zebo, Congressman Horn's director here at the Lakewood office, for all the hard work they did in putting on this hearing. Congressman Horn, we thank you for inviting us into your district and letting us hear from your constituents and others. I think we also want to thank all of you who are remaining here for participating and being here today. I think it's been a very outstanding hearing and I am delighted that we all came. Thank you.

Mr. HORN. We thank you for coming.

Mr. CLINGER. And the committee stands adjourned.

[Whereupon, at 2:30 p.m., the committee was recessed, to reconvene at the call of the Chair.]

I

IN THE PAST, MUCH GOVERNMENT (TAXPAYER) MONETARY LOSS HAS BEEN INCURRED THROUGH LEAVING LEGISLATIVE PROGRAMS IN PLACE WHICH WERE NEVER USEFUL OR WHICH HAVE OUTLIVED THEIR UTILITY. THEREFORE, WOULD IT NOT BE A GOOD IDEA TO ATTACH A TIME LIMIT TO ALL LEGISLATION BEYOND WHICH THE LEGISLATION MUST BE BROUGHT UP FOR RECONSIDERATION CONCERNING EITHER MODIFICATION OR CANCELLATION?

II

THERE HAS LONG BEEN IN FORCE A GOVERNMENT HEALTH PLAN FOR GOVERNMENT EMPLOYEES AND RETIREES WHICH HAS WORKED QUITE WELL. IN THIS PLAN, THE RECIPIENTS ARE GIVEN A CHOICE OF MANY INSURANCE PLANS WITH DIVERSE TYPES OF PROGRAMS FROM HMOS TO FEE-FOR-SERVICE AND THE GOVERNMENT PAYS ABOUT 3/4 OF THE PREMIUMS WHILE THE RECIPIENT PAYS THE REST. COULD NOT THIS PROGRAM BE EXTENDED TO THE REST OF THE POPULATION, INCLUDING PEOPLE ON MEDICARE AND MEDICAID, WHO ARE NOT OTHERWISE COVERED BY HEALTH INSURANCE? IN SUCH A PROGRAM, THE PROPORTION OF PREMIUMS PAID BY THE GOVERNMENT AND BY THE RECIPIENTS WOULD VARY MARKEDLY ~~BETWEEN~~ BETWEEN FULL PAYMENT BY GOVERNMENT BELOW A CERTAIN MINIMUM INCOME TO NEARLY FULL PAYMENT BY VERY WEALTHY RECIPIENTS.

III

THERE HAS BEEN SOME MOMENTUM AMONG PENURIOUS REPUBLICANS TO CUT BACK ON PROGRAMS SUPPORTING BASIC SCIENTIFIC RESEARCH. HOWEVER, PAST EXPERIENCE HAS SHOWN THAT SUCH PROGRAMS OFTEN BENEFIT THE COUNTRY ECONOMICALLY ON A LONG TERM BASIS. THEREFORE, ALTHOUGH THERE ARE PROBABLY SOME AREAS IN WHICH MONEY MIGHT BE SAVED BY SOME CUTBACKS, GREAT JUDICIOUSNESS SHOULD BE EXERCISED IN DISTINGUISHING GOOD PROGRAMS FROM BAD ONES WHILE AVOIDING A HATCHET JOB APPROACH. SUPPORT OF BASIC SCIENTIFIC RESEARCH IS ONE OF THE FEW AREAS IN WHICH GOVERNMENT PARTICIPATION HAS PROVED TO BE QUITE USEFUL.

CHARLES G McGAUGHEY
337 WINNIPEG PL.
LONG BEACH, 90814
(310) 434-0434

CREATING A 21ST CENTURY GOVERNMENT

MONDAY, OCTOBER 9, 1995

HOUSE OF REPRESENTATIVES,
COMMITTEE ON GOVERNMENT REFORM AND OVERSIGHT,
Albuquerque, NM.

The committee met, pursuant to notice, at 10:08 a.m. in Auditorium 100, Smith Brasher Hall, TVI Community College, Albuquerque, NM, Hon. William Clinger, (chairman of the committee) presiding.

Present: Representative Clinger, Schiff, Horn and Shadegg.

Staff present: Monty Tripp and Kim Cummings, professional staff members; Judith McCoy, chief clerk; and Denise Wilson, minority professional staff.

Mr. CLINGER. The Committee on Government Reform and Oversight will come to order. My name is Bill Clinger. I am the chairman of the committee and we are pleased to be here in Albuquerque for our fifth hearing on fashioning a government that is going to be effective for the 21st century. We were in Seattle, WA on Friday and we were in Long Beach, CA on Saturday and we are here in Albuquerque today. Prior to this weekend, we have held hearings in New Jersey and in Cleveland, OH, and we will be in Charlotte. So we are really trying to travel around the country and listen to those that have been involved in the efforts of redefining their operations; how they can make their operations work better; cost less and be more effective.

Before we begin to hear from our first panel of witnesses, I want to express my very deep appreciation to a very distinguished Member of the House of Representatives and the vice chairman of the Government Reform and Oversight Committee who has been tireless in ensuring that we were going to have an outstanding hearing today, and that is Steve Schiff. We thank you very much, Steve, for being here and for arranging this meeting. [Applause.]

I am going to ask him to make a few remarks in a moment or two here.

The purpose of our field hearings is to learn from distinguished witnesses who have had direct experience in creating more efficient and responsive business and government organizations. Many of the success stories that we have heard that have related to the private sector can be replicated to some degree on the Federal level. We hope that the insights learned from their success stories are going to help us meet our own challenge to create a Federal Government that is streamlined, innovative, responsive and far better able than the present model to lead us into the next century.

The Committee on Government Reform and Oversight wants to do more than talk about the need to streamline. We want to act on restructuring Federal agencies and departments to provide the results we think the American people expect. We are prepared to ask very difficult questions which confront the private sector daily. Does our organization meet the needs of our customers and can we effectively produce to the level of their demand? Too often we have heard stories that have indicated that the present structure is not very responsive to the needs of its customers, the taxpayers, and that is what we are trying to address.

Our Federal Government agencies have grown unchecked for a long time and the time for change is now. No longer will Federal departments and agencies expand in size and scope while the quality of government service suffers. Taxpayers demand efficient service for their contributions to these agencies and we are pledged to the effort of smart-sizing the Federal Government to make service delivery systems meet the needs and expectations of all American citizens.

Americans are painfully aware of bureaucratic red tape which we encounter when using the services of many of our Federal institutions. The Federal Government today is nearly six times the size it was in 1930, and that upward spiral continues today. In fact, statistics show that the Federal Government spent $203 billion more than it took in in fiscal year 1994, equivalent to $797 for every man, woman and child in the United States. This persistent over-spending and growth must be stopped if we want our Federal Government to provide successfully for future generations of Americans.

Our task as lawmakers is to create, hopefully, smart legislation that will focus the Federal Government on those essential functions that must be performed well on a national level. The fact is that many components of our Federal agencies can be more efficiently and cost effectively administered through State and local governments or private sector means. This involves knocking down the walls of bureaucracy and building a government that performs only those functions which create meaningful and needed results.

The witnesses appearing before us today have already met the challenge of preparing their organizations for the future, and we hope to learn from their experiences in creating our own 21st century government as we go into the next millennium. Through the contributions of these experts and the comments that we will receive hopefully here today from the people of New Mexico, we hope to learn how innovation and a vision for the future can lead to a government that truly reflects the needs of its citizens.

With that, let me again thank our witnesses who will be appearing; the audience who is here with us on a holiday and we are grateful for that; and my colleagues who have taken the time to attend this hearing and listen to what our witnesses and the people of New Mexico have to say.

It is now my very great honor and pleasure to recognize your local representative on the Government Reform and Oversight Committee and the vice chairman of the committee, Congressman Steve Schiff for an opening statement.

Congressman Schiff.

Mr. SCHIFF. Thank you, Mr. Chairman.

First, I have a brief written statement that I would ask unanimous consent to be made part of the record.

Mr. CLINGER. Without objection, so ordered.

Mr. SCHIFF. And I have just a few personal comments to make. One is a personal welcome to you and to our colleague, subcommittee chairman, Steve Horn from California for being here. We are very honored that you have selected New Mexico as a site for one of these hearings on designing a 21st century government and we are just pleased you are here. As you said, it is a very important hearing and a very important subject.

I just want to take a moment to say how the witnesses and panels were put together here. We have three panels of witnesses planned and they are—and we will introduce them in a moment. First, a panel of State government officials. Second, we have a panel of local government officials and third, we have a panel of individuals who are testifying because of their non-government affiliation. After the three panels, we then have invited several New Mexicans because of their unique positions in the community or because of representing an important constituency in the community to address the committee for 5 minutes each. And if there is time following the three panels and the individuals who will testify for 5 minutes, we will open the microphone so that anybody here who wishes in the time available can also address the committee for say up to 5 minutes.

I want to say however very candidly and with some regret, we do not know where the timeframe will be. This particular hearing does not have all of the time flexibility that our other hearings sometimes have because we are due in Washington tomorrow and we all have to start catching planes here in the afternoon; therefore, I cannot absolutely guarantee that there will be an open-mic time as much as I would like to have that. Knowing that would be the situation, I did arrange with the chairman to make an additional part of this hearing, and that is, we contacted 28 organizations here in New Mexico, some local, many with national affiliations and invited them to submit written statements for the record. And we should have at the back copies of those written statements we have now and a list of the 28 invitees. We do not have our list here. I will make that available to anyone who wants to see it to demonstrate that we tried to get our best cross section of business organizations, labor organizations, professional organizations and philosophical organizations from all different sides of the political spectrum to get the widest possible inclusion of information.

I have to add one more word on that. Some of the individuals—in fact, some of the testifying individuals and some of the organizations have asked additional time. Mr. Chairman, I would ask unanimous consent that the record stay open until this Friday so any individual representing an invitee organization or testifying could submit a written statement to my office and we will get it to the committee.

Mr. CLINGER. Without objection, so ordered.

Mr. SCHIFF. Thank you.

Again, I want to say very candidly that we could have had any number of more panels; any number of more witnesses; any number of more organizations from our State and we did the best we could to have the best possible cross section for the time we have available.

Just a couple of final words, Mr. Chairman. I just want to thank the subcommittee—excuse me, the committee staff and my staff of my office for helping make these arrangements. And thank the president of TVI, President Sanchez for once again allowing the use of his facility.

One final word. For those of you who have never seen a congressional hearing before, during the 4 hours we are scheduled to be here, you may see those of us up front coming and going a little bit. Sometimes we have to check in with Washington and just see what is going on. I am trying to get our health care fraud bill into the—some legislation going on right now I am trying to keep track of. Sometimes representatives of the media need to leave to do other stories and they will ask us for an interview, so we might have to step out a few minutes. And I want to say that if you have never seen a congressional hearing before, I know that can be somewhat disconcerting and you wonder well, how could there be coming and going while people are testifying. And I want to state that no rudeness is intended in that. The way a congressional hearing works is, with no disrespect to the chairman, the most important person at the hearing is the gentleman with the mask seated over on my left. He is not wearing the mask because he is here to rob anybody. I want to make that very clear. He is making a record of every word that is being said here and in due course this hearing will be printed and made available to all Members of Congress. And for that reason, the written testimony is of equal value with the oral testimony because everything will be in writing. So whether testimony is spoken here by these witnesses or other witnesses or whether testimony is submitted in writing, it will all appear as part of the same testimony when the hearing is printed and distributed to all Members of Congress. That really is the important part of a hearing, getting it all in the record so it is all distributed.

With that, Mr. Chairman, thank you for the time you have extended to me and thank you again for holding the hearing in my State.

[The prepared statement of Hon. Steven Schiff follows:]

Opening Statement of Congressman Steve Schiff:

Let me begin by saying thank you to T-VI for use of their facility and to our panel members for taking time out of their busy schedules to testify before the Government Reform and Oversight Committee on the issue of "21st Century Government."

I feel it is particularly important that this committee hear from a diverse collection of New Mexico's civic and community leaders since the interaction between the federal government and the Land of Enchantment is so significant in so many ways.

It is also important at this time in our nation's history, since the new Congress has set about to re-examine the role of the federal government in everything from welfare to research & development.

The hearing will consist of three panels, featuring state and local government as well as non-governmental entities. We will also hear from prominent individual New Mexicans. Further, 28 organizations from around the state were also asked to submit written testimony for the record.

These panels and witnesses were sought out with the idea in mind that we could get a fair cross section of interests and opinions from around the state. It could not be exhaustive due to logistical constraints, so I hope every group or individual feels free to contact this office with any additional input on this or any other topic.

Within the overriding context of balancing the federal budget and retiring the deficit, there is still a lot of room for debate over the appropriate role for the federal government. And within ongoing programs, there is certainly room for improved efficiency and increased effectiveness.

The $ billions wasted in health care fraud is but one example. And New Mexico has, I'm sure, much more in the way of recommendations for improving government. I look forward to taking what we learn from this hearing and applying it to the urgent business of government reform as we work to streamline and retool for a more responsive, effective 21st Century government.

Steve Schiff

Mr. CLINGER. Thank you very much, Mr. Schiff.

I am now pleased to introduce a gentleman who is directly involved in the efforts of the Government Reform and Oversight Committee, which is charged with the overall responsibility of taking a hard look at the way the Federal Government exists now, the various components of it, and determining which could better be performed at some other level of government, which could better be performed by the private sector or which should perhaps not be performed by any institution and should be done away with. He is the chairman of the subcommittee under the Government Reform and Oversight Committee having to do with government management and he has been holding a series of very interesting and very informative hearings on these issues and we are delighted that he was able to join us here today. Congressman Steve Horn from Long Beach, CA.

Mr. HORN. Thank you, Mr. Chairman. I will forgo the pleasure of a statement. I want to hear from the witnesses, so let us begin the hearing.

Mr. CLINGER. At this point, I would like to ask our colleague, Mr. Schiff, to introduce our first panel.

Mr. SCHIFF. Thank you for that courtesy, Mr. Chairman. I am pleased to say that our first panel consists of three very distinguished New Mexico State government officials. First, I would like to introduce our Lieutenant Governor, Walter Bradley. He has had a very distinguished career in the private sector at Texas Instruments and at New Mexico Chem Search and other companies, as well as public service where he was president of the State Senate from 1989 to 1992. And while he was serving in the Senate, he was recognized by the New Mexico Association of Commerce and Industry with their highest rating for private business legislation. I welcome you, Lieutenant Governor.

Lt. Gov. BRADLEY. Mr. Chairman and, Mr. Schiff, thank you.

Mr. SCHIFF. I'm going to also say that we welcome the—if I am remembering my New Mexico Constitution correctly, the third highest ranking official in New Mexico State government, the secretary of State, Stephanie Gonzales. Stephanie, we are very glad that you are here. Stephanie has been—before being secretary of State was the chief deputy in the secretary of State's office and when I was district attorney, we would work together on a lot of voting matters when elections came up. I think that you run a fine office and I thank you for being here.

And last, but certainly as they say not least, I would like to introduce the chair of the Children, Youth and Families Department, Dr. Heather Wilson. Heather and I have known each other since Heather moved to New Mexico and I have just been very impressed with Heather's operation of the Children, Youth and Families Department and a number of just innovative ideas. I must admit that I have never heard of anyone going door-to-door before looking—you know, spreading the idea of foster homes that are needed. But, I think it is a great idea among others that you have.

So on behalf of the committee, I would like to welcome all of the panel members.

Mr. CLINGER. We thank you very much. It is the custom of this committee because we are the principal oversight committee of the

House of Representatives to swear all witnesses so as not to prejudice any witness. If none of you have any objection to being sworn, I will ask you to stand and we will swear you in.

[Witnesses sworn.]

Mr. CLINGER. Your entire written statement as has been indicated will be included in the record. You can summarize as you choose. We will be timing you but do not worry if the alarm goes off. I mean, we are going to give you latitude on that thing. But just to try to move us along, you will have 5 minutes and then whatever you need beyond that.

So, Lieutenant Governor, why do you not lead off. And again, welcome.

STATEMENTS OF WALTER BRADLEY, LIEUTENANT GOVERNOR, STATE OF NEW MEXICO; STEPHANIE GONZALES, SECRETARY OF STATE, STATE OF NEW MEXICO; AND HEATHER WILSON, SECRETARY, CHILDREN, YOUTH AND FAMILIES, STATE OF NEW MEXICO

Lt. Gov. BRADLEY. Very good. Thank you, Mr. Chairman, Representative Schiff and Representative Horn. Do not start my 5 minutes yet because on behalf of the State of New Mexico and the Governor, I have got to give you a welcome.

Mr. CLINGER. That is right.

Lt. Gov. BRADLEY. I understand that you have planes to catch. If you miss one, we have got several balloons lined up. [Laughter.]

Mr. CLINGER. The prevailing wind is headed east.

Lt. Gov. BRADLEY. Then it is not a problem. We can handle that.

And as far as it being a holiday, you know, being from the private sector and now as an elected official, I do not know that we have holidays. We spend a lot of time working in the private sector trying to make a dollar in this wonderful country of ours, which by the way is a capitalist country and we believe strongly in capitalism and profit is not a dirty word, and the Governor wants me to relay that to you. We are well on our way.

Mr. SCHIFF. I think we are into your 5 minutes though now. [Laughter.]

Lt. Gov. BRADLEY. OK, we are into it.

Mr. Chairman, members of the committee, I do want to thank you for sharing this time with us because Governor Johnson and I firmly believe that last November the citizens of New Mexico and all across this Nation declared that they wanted a change. And in New Mexico, they elected two business people to run State government and our first charge was to appoint 16 new cabinet secretaries who were from the private sector. We intentionally went out for private sector oriented cabinet secretaries, staying away from the entrenched bureaucrats, if you will, people that had run them before. And to each one of those administrators we gave them all the same charge, run your department like you would your own business and let us put business sense into State government.

Now among those cabinet secretaries—and I am pleased to be on the panel with her today—is Heather Wilson, the Secretary of Children, Youth and Families. Quite frankly, Governor Johnson and I view Heather as a shining example of what we wanted to have happen to State government. I am not going to take a lot of time

because she is going to give you the details, but I want to talk to you just on the highlights of what she has done in less than 1 year here. It is something that we think is very, very important.

Secretary Wilson inherited a department that was both running a $2.2 million deficit and building a reputation for wasting money. This past June with the deficit gone, the Department of Finance and Administration told the Governor and I that Children, Youth and Families had a better handle on the budget than any other State agency. And here is what she did. She came in, looked at her department, reorganized it, took six divisions down to five or six agencies down to five. She had two deputy secretaries. She figured that just one was all she needed. She did not need two of them, so she eliminated one and she redirected funds to provide 29 probation officers out in the field. Getting them from behind a desk and let us go to work where we need to be, down in the trenches. She even gave up her own car, the company car. She was always provided a State car, if you will, and she turned that in and said her Volvo drove just fine and she could drive it. But probably the most impressive facet of that whole transformation was that she is doing this on $22 million less than what her predecessor had asked for. Simply by looking at her organization, reorganizing it and making it more efficient and putting the service out where it should be.

Now as important as we feel it is to have business-minded cabinet members in State government, we recognize that real change is going to be effected in the trenches. So over the course of the last 9 months, I have been meeting with our State employees in groups creating a dialog with them. And I have two questions that I ask them. The first question is, do you honestly believe that the majority of the people in the State of New Mexico view State government in a favorable light? And I do not hardly ever have a hand that goes up. The second question is do you like that? And I hope to God I never get a hand that goes up on that because quite honestly, no employee likes working for a company where their clients view them unfavorably. Then we start a dialog, and the dialog is we are here to change that. Because what we have to do is change an attitude. We have to change this adversarial position into one of service. I do not know exactly how we got here. It has been many, many years and it is what I refer to as the creepy, crimey, slimy, sludge of government that has just infiltrated into business and private sector lives, and it is an attitude that has happened that has created this. We have gotten away from being a service company to the point where the people absolutely distrust government, and we are going to turn that around and get out of this adversarial intention.

Now if we do not have the employees on our side, the government employees, this will never happen. I want to tell you that the employees are reacting very favorably and they are working with us. They are giving us suggestions. I want to give you just one example, because we are inviting them to tell us where is the duplication; what is going on; where can we streamline; what is happening.

I just discovered this year that in the State of New Mexico there are three layers of bureaucracy in order to get a lease from the private sector on a State building. An employee brought that to me

and said I do not understand why we are doing this because it is all just duplication. Each set is duplication that we go through. And we examined it with Secretary Bethard and indeed found that, yes, there are three layers of bureaucracy and we are going to eliminate two of them. But in fact, we are looking now at going even further than that. We believe that we can privatize that whole leasing section and save the taxpayers a tremendous amount of money because in the private sector they do not have to disclose who their client is until they sign a contract.

We found that when the State of New Mexico or a University or a State agency goes out to get a lease or to build a building or buy a piece of property, when the owner knows who it is, they are going to raise the price. I know, I did it. I was there. And all of us do. Well, if I do not know who that client is and a private sector broker comes in and says give me market value for these buildings, I am going to submit to you that we will save a tremendous amount of money. That was brought by an employee to us who was saying here, here are some problems going on. Employees do want to make this happen. They really do.

Now probably one of the most useful tools that we have found is what you are doing here today, this focus group, where you are bringing in and you are getting real live stories of what is going on. Well, I have started—with the help of the Governor and several private sector organizations, Association of Commerce and Industry, National Federation of Independent Business People and the Chamber of Commerce around the State, I am holding hearings on what is called the Small Business Advocacy Group. Now, I have one golden rule when we start these hearings, because I have been to a lot of these government hearings before in the past. And when I walk in, we do a head count and if we have more bureaucrats than we do private sector the meeting is over. It is done. Because I have been to a lot of those where the bureaucracy was in there to tell me how to run my business and that is not what this is designed for. This is designed for the people, the citizens of the State of New Mexico and the business people to tell us what is in the way. What can we do in State government to make it work for them, make them profitable? What is in the way, regulations? Anything is wide open. They are giving us the agenda that the Governor and I working with the cabinet secretaries have to fix. And not surprisingly, probably the big three things that we will hear and that you will hear from these people and citizens of the State of New Mexico is that there seems to be an adversarial position from the very beginning with government. There is an inconsistency of information. And the third thing is they do not feel—they feel they are over-regulated with duplications and triplications from Federal and State agencies.

One example that I will give you on that is the BLM and Energy, Minerals and Natural Resources of the State of New Mexico. The BLM, we finally got an agreement on drill permits on land. We were requiring the exact same information that the Federal Government was. We had two agencies coming in here, making them track the same things. We have an agreement now that the BLM will go ahead and copy their information to us. So that will eliminate us having to do it. But that is just one little tiny step and I

want you to understand that. But they want us to eliminate that duplication and those advocacy hearings are the way that we can make this happen if we as legislators and elected officials listen to what these people are telling us and then put it into practice.

As I prepared my remarks for you today detailing my thoughts, I began to think of all those people out there who do not get an opportunity to come before you and talk to you when in actuality we talk to them on a daily basis. Every day we see them but we do not listen. Sometimes we are just not listening to what they say and we do not utilize what they bring to us. And all too often, people involved in conflict are unable to resolve disputes in a sensible manner. Now as the ombudsman of the State of New Mexico, which by constitution the Lieutenant Governor is, I do receive a lot of these complaints. But quite frankly, in my office and in our administration, we view complaints as an opportunity to resolve problems and to change the way we are doing business. So when I get these, I bring them in and I take them to the cabinet secretaries and I ask them to examine them and bring me back the data and tell me what is going on. Not one time will I ever instruct any cabinet secretary what to do because that is what they were hired to do. But what it does is it puts a focus on some of the—I call them extremely stupid things that we do in State government and Federal Government. And when we focus on it, then we can revise it and change what we are doing.

One last example on that issue. We had a complaint from a private sector business who was fined on an OSHA violation for a penalty that he could not find in the statutes or the regulations, a $5,000 fine. I called the cabinet secretary; the cabinet secretary took a look at it and same—called me back and said I cannot find it either. I called the legal staff and they said they could not find it. I went down to the inspector and found out well, it might be a gray area. Well a $5,000 penalty on a gray area is a pretty serious matter. And on further pushing, we found out that well, maybe it is not a violation but it ought to be. A $5,000 penalty and we cannot find it. I asked the cabinet secretary what he was going to do and he said, well, I think we ought to get out of it, and I suggested to him that well, maybe that would be a good idea. You know, maybe you ought to get one of those—have one of those attorneys of yours write one of those after-further-review letters and send it out. We have made a mistake.

A couple of days later, I got a call from the legal staff that told me that they wanted to show me how they could go to court and maybe win pushing this. And I said, well, has anything changed? Has the secretary told you anything different? No. Have you found the violation? No. Then why are we going to court? Well, we just think that we should be able to do this and we think we can make a case here. I said, well, would it not make more sense if you just went out to the industry and asked them to come in and participate on trying to fix this?

To make a long story short, what we had done I discovered, this legal staff said we have got one more problem and I said what is that? They said, well, we do not have a procedure for withdrawing the penalty. And I said, oh, so in other words the State of New Mexico has never made a mistake because we do not have a proce-

dure? Well, we do have a procedure, Mr. Chairman, now. We have a procedure for doing this, but the honest to God truth is—and I would like to leave you with this thought and this message. Government should not be afraid to admit it has made a mistake. Never be afraid to admit making a mistake.

Our employees should never be under the idea that they cannot admit that they have made a mistake. When we make a mistake, let us go forward. The cost to the taxpayers of the State of New Mexico to go to that hearing will run somewhere around $8 to $10,000. The cost to that business sector person to go defend themselves against a violation that does not exist will be between $6,000 and $7,000. You want to know why the cost of goods are high, look at the way we do business. Let us admit when we make mistakes and let us have our employees able to admit when we make mistakes.

With that, Mr. Chairman, I think I have taken a little bit more than my 5 minutes and I will shut up and stand for questions.

Mr. CLINGER. Thank you very much, Lieutenant Governor, for very provocative testimony. We really appreciate your being here today.

Lt. Gov. BRADLEY. Thank you.

[The prepared statement of Lt. Gov. Bradley follows:]

For Release October 9, 1995

REMARKS BY THE HONORABLE WALTER D. BRADLEY, LIEUTENANT GOVERNOR:
Field Hearing of the Government Reform and Oversight Committee
United States House of Representatives
TVI Community College Board Room
525 Buena Vista SE
Albuquerque, New Mexico

10:00 a.m.

Mr. Chairman and members of the Committee:

Thank you so very much for affording me the opportunity to visit with you today. Let me say that I find it heartening that you have made your way to New Mexico to tap into the creativity of our people.

Last November, the citizens of New Mexico elected two business people to run state government. Shortly thereafter, 16 new cabinet members joined the administration, bringing with them years and years of private sector experience. To each of these Cabinet Secretaries the administration gave the same charge. "Run your department like you would your own business."

Among those Cabinet Secretaries is our very own Heather Wilson, whom I have the great pleasure of standing alongside today. You see, in my opinion, Secretary Wilson exemplifies what Governor Johnson and I had in mind when we asked the people of New Mexico to allow us to lead.

Recognizing that Secretary Wilson is also going to address the committee I won't linger too long on her accomplishments of the past nine months. I would, however, like to highlight the fact that Secretary Wilson has consolidated the Department of Children, Youth and Families from six agencies to five. She determined that one Deputy Director could perform the work of two and that 28 probation officers helped more people if they were out in the field rather than trapped behind a desk someplace. Secretary Wilson even turned in the keys to her "company car." Perhaps the most impressive facet of the transformation is that it occurred in the face of a five million dollar budget reduction.

As important as we feel it is to have business minded cabinet members in state government, we recognize that real change is effected in the trenches. Over the course of the past nine months I have been talking to small groups of state employees. These meetings are more than mere pep talks designed to charge up the workforce. They represent our best chance to articulate the role we feel government should play in the

lives of the people of New Mexico. As I am sure most members of the committee are acutely aware, government is largely distrusted by the people. We want to change that. That's why we are forever encouraging state employees to cultivate relationships with private sector interests that evidence cooperative, rather than adversarial intentions. We also encourage employees to be pro-active in their efforts to streamline the process and make government more user friendly. After all, these are the folks who have the best understanding of what changes need to be made. It is simply a matter of getting them to buy into the philosophy of this administration.

Interestingly, one of the more useful tools we have used in gathering information has been the focus group. It is interesting because the process is not all that much different than what we are here for today. For the past few months I have been traveling around the state conducting Small Business Advocacy Hearings. The express purpose of these hearings is to provide a forum for the people to both voice their concerns and suggest methods for improving state government. In my estimation, these hearings are extremely worthwhile because they draw participation from those who really do care about the "bottom line." I find these participants inherently credible when they tell us we need to streamline state government through better training, consolidation of departments, appropriate deregulation, and yes, privatization.

As I prepared my remarks to you today detailing my thoughts on restructuring government I began to think of those people out there who rarely have the opportunity to speak on the record to leaders like us. And yet... we talk to them every day. Naturally, I am talking about those who seek our assistance in the area of constituent services. If we need any clue as to how we can make government better, these people should be our source.

All too often, people involved in conflict are unable to resolve disputes in a sensible manner. As the state's ombudsman I am often asked to examine instances in which the relationship between government and a private citizen has broken down. If I have any one principle that guides me through these difficult situations it is "GOVERNMENT SHOULD NOT BE AFRAID TO ADMIT IT HAS MADE A MISTAKE." In reliance on this principle I often find myself encouraging state agencies to correct situations in which they have exceeded their charge.

Today, I would like to ask this committee to place this simple principle at the foundation of its efforts to make government better.

Thank you, I have kept my comments deliberately brief so that I might entertain any questions or comments you might have.

Mr. CLINGER. Ms. Gonzales.

Ms. GONZALES. Thank you, Mr. Chairman and members of the committee. Again, my name is Stephanie Gonzales and I am secretary of State for the State of New Mexico, a post in which I have served since January 1991. Let me take this moment to welcome you and the members of the committee to the Land of Enchantment.

Mr. Chairman, I oversee an agency of State government comprised of 34 employees that has an annual budget of about $3.2 million. So as government bureaucracies go, we are rather small. However, though our agency's size may not be immense, this fact in no way diminishes the importance of our mission to the taxpayers and citizens of New Mexico.

The Office of the Secretary of State oversees the election process throughout the State. This office is also the repository for filings—for a number of documents vital to the smooth and effective flow of commerce for the State of New Mexico. From the outset of my administration, we have been striving to find ways to provide service to the public in a faster, more efficient and effective and user-friendly manner. To accomplish this, my agency has not engaged in any downsizing. Downsizing would not have served the public's interest. Over the last 5 years the legislature has expanded our mission in a number of ways, most particularly in the area of campaign reform oversight and administration. But I can say with pride that this office, the people in it have been doing much more with the same personnel and resources than ever before.

To the extent that one might say that we have engaged in restructuring, it has been through the smart introduction of new telecommunications technologies and introducing these technologies, we have been restructuring the way people perform their functions. Training them to use the new technologies and thereby improving their productivity. Mr. Chairman and members of the committee, it is in this way that we have successfully met the challenge of the expanded mission to which I had referred to earlier.

If there is a basic theme that could be applied to what we are attempting to do, I would call it virtual government. Virtual government is making our services and our information available and accessible to the public in real time easily and inexpensively. Our vision of this government seeks to meet the challenges to what we can only call a cyber future.

For example, with respect to electronic commerce, we have made available on-line search capabilities of the data base's index of filings of secured loans under the provisions of the Uniform Commercial Code. This service has helped us cut costs and save time for the users of this information, most notably banking institutions and title companies, and soon, we hope to make available to the public on-line the capabilities of calling up digitalized scanned images of the original source documents themselves.

Ultimately, our goal is to incorporate full and fully the idea of EDI or electronic data interchange. With EDI, the initial UCC filing itself can be conducted on-line. This means one time data entry, reduction of manhours and a revolutionary reduction of paperwork.

Another area, Mr. Chairman—here is where we really are reducing paperwork with our new electronic reporting system. This is

the system used for campaign—used for candidates in political committee campaign reporting. My staff has developed a program that allows candidates to compile their campaign reports on their own PCs and then file them in our office by simply dialing us up and transmitting the report over the phone line. What are the advantages? No paper, reduction of errors and better service to the public which examine these reports on computer terminals in our office.

Finally, Mr. Chairman, let me point out that earlier this year we established without the benefit of any additional appropriation nor added cost to the taxpayer a very useful and popular web site on the worldwide web. Possibly the most accessed feature of our web site is a cross referencing listing of all the lobbyists registered in the State of New Mexico and a listing of all of the organizations represented by lobbyists. In addition, our web site makes important election information available to the public. It provides a complete roster of all the elected officials in New Mexico from State level down to the county level. Though I cannot give you the exact number yet, but we have nonetheless witnessed a significant reduction of requests for hard copies, either for the rosters or lobbyists list.

Mr. Chairman, let me conclude by saying that our government must indeed change the way it does business and we know it can. Knowledge and technology must play the pivotal roles. The collapse of bureaucracy society in the Soviet Union occurred largely because it attempted to raise and have resistance against new technologies and its inability to incorporate new people empowering technologies. I am one who believes that these are things only government can and should do. In both the first and final analysis, the people are the shareholders of this government and their elected representatives are the board of directors; accordingly, we in government who serve the people simply cannot conduct ourselves as though innovation and creativity are solely preserves of the private sector. Regardless of whether we call the model virtual government, entrepreneurial government or whatever, we must continually strive for improvement. To think and do otherwise would be a disgrace for our profession. Ultimately, it is the public employees themselves who will make a difference.

Thank you for allowing me and affording me the opportunity, Mr. Chairman.

Mr. CLINGER. Thank you very much, Ms. Gonzales. As we have traveled around the country, it has been brought home to me that the States are doing a much better job in adapting to the new technologies that are available than the Federal Government is. I mean, we are way behind the curve I think in that regard. One example, Congressman Schiff has been very active in trying to fashion legislation that would allow us to address the waste, fraud and abuse problem that exists in the Medicare system which is estimated to be anywhere from $26 billion a year, and yet we find that the technology we have in place at the present time is so antiquated that we have no effective way to keep track of the bad guys, the people who are ripping off the system.

Ms. GONZALES. Mr. Chairman, I do believe that the State of New Mexico is on the forefront of technology.

Mr. CLINGER. I very much appreciate your testimony.

Ms. Wilson.

Ms. WILSON. Mr. Chairman, welcome to New Mexico. I have submitted a statement for the record but I would like to highlight a few of the things for you before taking some questions.

The Governor asked me the take this job 9 months ago to lead New Mexico's Children, Youth and Families Department. He said that he chose me for my record of successfully managing people and resources. He hired me to turn around a trouble agency. While that challenge was certainly intriguing, I took the job because I have a deep personal passion for children earned through personal experience. But you cannot turn around a troubled public agency without putting together a team of professionals who are committed to that task. Some of them showed up here today to help support me and I want to thank them for coming in on their holiday.

Some of my dream team here; Christine Romero, who is the division director for human resources and is putting family friendly policies into the workplace in the Children, Youth and Families Department. Debra Hartz who is committed to achieving excellence in child welfare, who we hired in from Albuquerque public schools, doing a great job. Terence Cady who is the general counsel for the department and is a counselor in the true meaning of that word. And a handful of folks from the Office of the Secretary who are tasked with keeping me in line—which is no small task.

I also noticed someone walked in who is probably the most important person in this room in terms of helping me do my job, Jay Hone, my husband.

Let me summarize for you a few of the things we are doing in Children, Youth and Families. I took this job not having any experience in social work but bringing a philosophy toward the operation of government which I believe was very direct and fairly firm.

First the role of government is limited and regulations and bureaucracies do not save children. People save children, one kid at a time. I believe in the value of responsible living and that adults and children must be held accountable for the choices that they make, otherwise they will be denied the opportunity to learn from those mistakes.

I bring with me a disdain for bureaucracy which I think is genetic because it has not been shaken at all. I also bring with me a very strong belief in ethics and accountability in government. Dishonesty is a cancer which can destroy the best of organizations. As leaders we must be above reproach and our employees and the public must be confident that problems will be faced forthrightly, that we will tell the truth and that we will play by the rules or change the rules.

The Children, Youth and Families Department has 2,000 employees in 140 different locations scattered across what is, by geography, the fifth largest State in the union. We operate the Juvenile Correction System all the way from probation and parole to our institutions for the most chronic serious juvenile offenders and 35,000 children are arrested in New Mexico each year. We investigate 25,000 allegations of child abuse and neglect each year. Of those, 7,000 cases are substantiated. We provide foster care for 1,600 kids each day in New Mexico with only 600 licensed foster homes. We subsidize 46,000 meals a day for kids across the State

as we administer the Federal family nutrition program. And we do a number of other programs including the Children's Mental Health Program's managed care system here in New Mexico.

We live in a low income State with a higher than average percentage of children in the population. We have a birth rate to unwed parents that is a third higher than the national average, and troubling social factors like these are driving the increases, I believe, in juvenile crime as well as increasing problems with abuse and neglect.

This department which I took over had been a target for criticism from the start. There were those who felt that the department ignored the rising tide of juvenile crime; that the department misused funds and was piling dollars on programs without demanding accountability from program managers. Within the department, employees who felt that retribution against employees who told the truth and voiced honest concerns was a problem. I needed to evaluate and reorganize the department quickly so that similar functions were organized together and we did that. In the third week of January shortly after—I think 18 days after taking over this department, we announced a massive reorganization that moved from six divisions to five; that organized functions along the line of mission and set the course for future direction.

The department was only put together 3 years ago, and I think the problems were characteristic of any young organization that had been pulled together from different pieces of other government agencies. We had about six different maps of the State of New Mexico and whether you were in District 2 in the Protective Services Division, you might be in District 3 for the Juvenile Justice Division. That kind of nonsense was something that we turned around immediately. While it was difficult for some, we now have one map of the State of New Mexico.

We also set about crafting a statement of common values and refining the statement of our mission. When the Governor asked me if I would be willing to talk to him about running this agency, I read the mission statement. I read it again and again and I still could not understand exactly what this agency did. And it seems to me if a mission statement is not clear, employees and the people we serve will have no idea what we do. So we clarified that mission statement; developed a sense of common values, a written statement of common values of what we expect of ourselves and what our employees and the public may expect of us.

We also established for the first time a strategic plan for the organization establishing 10 goals with metrics and milestones for implementing those goals and assessing our progress. A strategic plan, which according to the chief of staff has now become the model for other State government agencies.

We began with a projected budget shortfall of $2.2 million and a scant 6 months to make that up. The financial controls and procedures which you would expect would be in place for an organization of this size were not. We began moving budget authority and responsibility out to the management level. We established a budget development process which included detailed program reviews of every program in the department. We implemented fiscal controls

and process reviews from procurement to pre-audits where those financial controls were weak and needed strengthening.

The program reviews I think were one of the greatest things that we have done thus far in the department in that we went through in detail everything that we did in the department, identifying those things which were working and needed strengthening and those things which were not and needed to be pruned back. What it allowed us to do was to set priorities within resource constraints, which is exactly what a budget should do.

While these substantive changes I believe are important, there are also some symbolic changes which in some ways are some early victories that you need in turning around any organization in order to lead the way so that employees know exactly what the boss' priorities are. And sometimes even those small victories in terms of making changes take on much larger proportions. We did go from two deputies to one. I turned in my State car, which probably is the thing that most people remember—things that people remember most about me. I hope there are more substantive things in the long run.

The office that I had been assigned, had a shower and was larger and better furnished that many of the homes I have lived in in my life. It has now been broken up into offices for three or four people and I have moved into more modest quarters.

The stationery that the department had used was embossed with gold, and I thought that was a little bit dramatic. While it may be only a small thing, it turned out—the department turned out to have spent $50,000 on gold embossing on stationery in the last 3 years. It seemed to me that in setting priorities, $50,000 for embossing of stationery was not where we should be spending our money.

I also established an open door policy where any employee can have 15 minutes of my time and my undivided attention just by asking, and unless it is a legal matter or involved in some legal complaint process they do not even need to tell me what they want to talk to me about.

We have brown bag lunches with the employees at the line level and we involve line employees in every major initiative—in the development of those initiatives that we have done in the department.

Those kinds of open door meetings have led to some major results, including shutting down a program which was giving cars to people who had abused their children. And taking the advice of a manager who had been trying to get attention for a long time and reworking one bureau's budget to create an additional $1.3 million worth of subsidized day care slots without $1 of increase in New Mexico taxpayers' money.

We are also about to announce a massive change in our personnel policies in the Children, Youth and Families Department. Coming from small business, I took great pride in having a flexible, family friendly workplace, and I found that the policies and the procedures that were in place in the Children, Youth and Families Department just did not come close. If we have flex-time that is not flexible, what is the point? And so we are going to significantly revise all of our personnel policies, to send a message to our employ-

ees that it is possible to take your No. 1 job seriously, which is being a parent, and also have a satisfying professional life.

The most important project that we have announced and pursued in the last 9 months is the systematic overhaul of our juvenile correction system, which we call "Restoring Justice." It is a comprehensive review and reform, to deal with a 35 percent increase in juvenile crime in this State in just the last 3 years. We are dangerously over-crowded in our institutions and 80 percent of our kids who do not go before a judge when they are arrested are in large part, just warned and released without any accountability for what they have done wrong. We are going to change that in the State of New Mexico, and we are proposing to the legislature in January a plan which would do so.

At the risk of offending David Letterman, I have come up with my own top 10 list of things to keep in mind when turning around a government agency and trying to make it better.

No. 10—Expect excellence. If you do not expect excellence, you will get what you expect.

No. 9—What gets measured gets done. And that is directly related to our strategic planning process.

No. 8—Never tell people how to do things. Tell them what to do and let them surprise you with their ingenuity.

No. 7—Encourage disagreement until the point of decision. You will be surprised at the number of people in government who are afraid to tell the truth, and have to be actively encouraged to disagree.

No. 6—Enlist the line employees. They hate the bureaucracy more than anyone.

No. 5—Words and symbols matter.

No. 4—Clarify the vision. What are we trying to achieve and what is our strategy for doing so.

No. 3—Bold moves are easier than minor corrections.

No. 2—Hire creative non-conformists. They will get the job done.

And No. 1—The job is not to row the boat, the job is to steer it.

This is the toughest job that I have ever had. I also enjoy it very much, but I have to tell you that a friend of mine recently did an informal survey of business executives. One hundred percent of them think that government needs to be fixed. Not one of them was willing to give up their industry jobs to fix it. We need more people who are willing to cross the line, to take the cut in pay and to fix things, whatever their reasons may be.

Thank you for your time and I would be happy to answer your questions.

[The prepared statement of Ms. Wilson follows:]

New Mexico Children, Youth, and Families Department

Office of the Secretary
(Santa Fe, New Mexico)

For Release October 9, 1995

REMARKS BY THE HONORABLE HEATHER WILSON, SECRETARY

Field Hearing of the Government Reform and Oversight Committee
United States House of Representatives
TVI Community Institute
Smith Brasher Hall, 717 University S.E.
Albuquerque, New Mexico

10 a.m.

Mr. Chairman and members of the Committee: Welcome to New Mexico and thank you for giving me the opportunity to visit with you about my experience in making an executive department of state government work better...for our employees, for the kids who rely on us for help, and for the taxpayers who are paying the bills.

I would also like to welcome you on behalf of the Governor, Gary Johnson, who is unable to be here today. He is personally committed to "taking the dumb" out of government and I am happy to help him do so. When the Governor asked me nine months ago to lead New Mexico's Children, Youth, and Families Department. he said that he chose me for the job because of my strong record of successfully managing resources. He hired me to turn around a troubled agency.

But, I took the job because I have a passion for kids...earned through personal experience as a foster parent, then an adoptive parent, to a child whose early years were scarred by neglect and abuse. I know first-hand the price kids pay when they are betrayed by the adults who should have loved them most...just as newspaper headlines routinely report the price all of us pay for failing to intervene effectively in the lives of troubled kids.

While I did not bring to this task a resume with any social work experience...I've had

experience negotiating arms reductions with Soviet generals, and working with senior executives in defense and scientific industry, but none delivering social services in a diverse, rural state...I did bring a philosophical foundation which informs each decision I've made and which continues to guide the Department as a work in progress:

> *The Role of Government* -- Bureaucracies and regulations don't save kids. That happens at the community level one kid at time...and requires the active support of churches, schools, organizations like 4-H and Scouts, and neighbors who care about each other and their community. Most of all, it requires moms and dads. Government doesn't have enough money, or enough "soul," and never will to solve every kid's problem. What state government has to offer is technical services, such as juvenile justice facilities to protect public safety, or licensing authority to assure child care providers meet at least minimum health and safety standards, or a system to investigate reports of child neglect and abuse and licensed foster homes to keep kids safe.
>
> *The Value of Responsible Living* -- Adults and children must be held accountable for the choices they make; insulating them from the consequences of those choices denies them the opportunity to learn from their mistakes and dooms them to repeating mistakes. Responsible living means for example, in the case of the kid who shoplifts a candy bar from the neighborhood Circle K, that instead of being "warned and released" by a probation officer, the kid will be required to perform at least a few hours of community service. A first offense...which usually means it's just the first time the kid has been caught...is the community's first opportunity to impress on a youngster that even a child has obligations, and that stealing is wrong. Responsible living means that parents, or the extended family, must participate in the rehabilitation process. Responsible living means, in the case of unwed parents, providing support for the baby, and that support will include both moms and dads.
>
> A Disdain for Bureaucracy -- The hardening of the arteries which

builds up over time in government institutions which are only indirectly accountable to the people we serve is inherent in the way in which government--particularly in social service agencies--operates. It is a disease which must be fought every day by people intent on making government work--and there are some functions government must provide--not just by fixing individual problems but by restructuring the way in which government functions.

Ethics & Accountability -- Dishonesty is a cancer which can destroy the best of organizations. We must, as leaders, be above reproach personally and professionally. Our employees and the public must be confident that problems will be faced forthrightly; that we will tell the truth; and that we play by the rules or change the rules.

The New Mexico Children, Youth, and Families Department, created just three years ago of bits and pieces from various agencies and the governor's office, has more than 2,000 employees in 140 offices at 90 locations scattered across what is -- in square miles -- the fifth largest state in the union, the Department has a budget of more than $200 million.

The Department is responsible for:

- Operating the state's juvenile corrections system which is straining to cope with a 35 per cent increase in juvenile arrests in just three years while relying on two routinely overcrowded facilities, none of which provides high security...for residents or staff.

- Investigating more than 25,000 allegations of child abuse and neglect each year, and providing services in the 7,000 cases which are substantiated.

- Providing for the 1,600 kids each day who need foster care with only 600 licensed homes available.

- Serving 46,000 meals every day to kids across the state as we administer the federal family nutrition program.

- Subsidizing day care for more than 7,200 kids whose families are among the working poor, and those on welfare.

- Operating the managed care system for children's mental health services.

- Providing a range of services, from licensing child care facilities to abuse and delinquency prevention programs.

New Mexico is a low-income state with a higher than average percentage of children comprising our population. Our rate of births to unwed parents is one-third higher than the national average, rapidly climbing toward 50 per cent. Those two factors, combined with an expected growth in population as more Americans discover the enchantment of living in New Mexico, imply that we will be confronted with increased juvenile crime, substance abuse, poverty, and other social problems as we head into the new century.

Other state agencies certainly do important work. The Highway Department fixes potholes and makes sure the no-passing stripes are visible. The Human Services Department makes sure that the welfare checks go out on time. The Corrections Department tries to keep predatory criminals off our streets. It is important to do all this well.

But, for me, the Children, Youth, and Families Department is about touching the next generation and shaping our future.

Like any young organization, this Department has growing pains which are no reflection on the competence of employees and has nothing to do with the change of Administration from Democrats to Republicans. It takes time, and creative leadership, to forge unrelated bureaus, offices, and units into a Department...with a clearly defined mission.

This Department had been a target for criticism right from the start...from those who thought the Department ignored the realities of growing juvenile crime while pursuing the whimsical notion that kids from toxic families could be taught to sing and dance their way to happy lives...from those who believed the Department tried to solve problems by piling more and more dollars on them without demanding accountability from program managers...from those who accused the Department of fostering a culture of retribution

against employees who voiced honest concerns...from prominent Republicans who concluded that the Department had become a haven for liberal social activists and should be abolished. It was a long and growing list.

So, I needed to evaluate and reorganize the department quickly so that similar functions then scattered across several divisions could be consolidated by mission requirements. The result was that six divisions became five, with all personnel functions consolidated in a Human Resources Division, all financial and administration functions combined in the Financial Services Division, various prevention-oriented and educational programs combined in the Prevention and Intervention Division, various social services joined under the more-aptly titled Protective Services Division, and the juvenile correctional facilities combined with juvenile probation and parole services in a single Juvenile Justice Division.

All of that may seem like ordinary common sense, but it was a struggle. Let me share with you just one example of what made it so hard. Every section of the Department had a history, and each of the old divisions had a map which reflected that history. Elements of the juvenile corrections section divided the state into districts which conformed to the judicial districts. Elements of social services which came from the old Human Services Department, or the old Department of Health, used the district maps from those Departments. The result was that when someone mentioned that there was a problem in District 2, I wouldn't know if we were talking about correction's District 2, which would be Albuquerque, or social services' District 2, which might be Santa Fe. I believed there was both practical and symbolic value in one department having one map of the state divided into districts everyone agreed on...and while there was real resistance, we got it done.

After getting one map, the next step was to craft a statement of common values, which we did; then, with input from line workers, senior managers met to clarify the mission of the Department and to build a strategic plan, with metrics and milestones and a defined schedule to monitor our progress.

A major criticism of the Department had always been that money was, at best, mismanaged. I was confronted at the beginning with a projected budget shortfall of about $2.2 million with a scant six months to make it up, and the more I learned about various

financial issues -- many of them uncovered with the help of frustrated employees -- the more clear it became that the Department needed to take a new approach to how we handled the people's hard-earned tax dollars. For one thing, too few employees had any real understanding of the budget process, or how to make decisions guided by the budget framework. That will change because we are moving budget authority...and responsibility...out to the managers, most of whom in the past routinely were kept in the dark about what their budgets were. If knowledge is power, budget knowledge -- centralized in the hands of a few people -- is absolute power...the consequences of which have been thoroughly established.

Financial controls and processes from procurement to pre-audits were very weak and needed strengthening. There was little connection between budget and program and no mechanism for investigating improprieties.

As part of a new budget development process, this summer we did program reviews which included the basic information about each program, how that related to the mission of the Department, and a measure of the program's effectiveness.

There is, among social activists in particular, a method of evaluation called "process measures." So, a program manager might set a goal of sending out 10,000 pieces of mail and spending $10,000. The process measure simply asks if 10,000 pieces of mail were sent, and if all the $10,000 was spent. If the answer is yes, the program is a success, and a budget request for another $10,000 -- or usually more -- is submitted.

Not on my watch.

As program managers discovered, I find process measures completely useless. I'm in favor of outcomes measures, which answer the questions: How did the program change behavior and how do we know that? If we didn't change anything, why are we doing this? Is there something we can change to make this work? In the case of prevention, do we have sound longitudinal research to suggest this kind of approach will work?

Among the results of the program reviews was the discovery of several outstanding -- but often obscure -- programs which do an excellent job and deserve more funding One example is our Teen Parent program which has sharply reduced second pregnancies

among participants, and now is getting national attention for its creative and non-traditional approach to guiding kids toward responsible living at low cost.

The best consequence of the program review was it allowed us to set priorities within resource constraints.

While substantive changes certainly are important in helping any organization become more customer friendly while achieving cost effectiveness in service delivery, symbols are an important part of the strategy, too.

It's very important, I believe, to have some early victories in any effort to change an organization, and to publicize those victories. Sometimes, even small victories...in terms of making changes...take on large proportions.

I said right at the start that I was determined to move resources from the top of our organization out to the front line workers delivering services to kids who had nowhere else to turn. To make clear my commitment, I started with my own office.

There were two deputy secretary positions, so I abolished one and used the resources to put an additional probation officer to work in a southwestern community with a growing juvenile crime problem and over-burdened probation officers. Later, with the stroke of my pen, I was able to redirect some other funds to hire 27 probation officers and reduce caseloads from as high as 107 for one officer to an average of about 40. Still higher then the national average, but an improvement.

I turned in the state car assigned to me and said the taxpayers were paying me enough for me to use my own car and buy my own gas.

My office had a shower and was larger, and better furnished, than many homes I have lived in. I moved into more modest quarters and my old office has been subdivided into space for several people.

I noticed that the Department's stationery was decorated with a gold foil seal, which was standard on business cards for anyone who wanted some. I decided to abolish gold-plated business cards and letterhead and was surprised to learn that move was going to save the

Department at least $50,000 a year. We no longer order letterhead stationery at all because it can be generated -- along with the letter -- by computer. I explained that while this was a small amount of money in a $200 million budget, it was enough to buy school supplies for the kids in foster care and extra milk for day care centers. In changing organizations, these symbols are an important signal of the new boss's priorities.

I announced that any employee could have 15 minutes' worth of my undivided attention simply by requesting an appointment. They wouldn't need approval from their supervisor and, except for issues being addressed though some legal process, need not disclose the subject of their meeting in advance. Now that workers have discovered that it's not only safe, it's often productive, to take advantage of my Open Door, I'm getting much more feedback from the people who do the real work of this Department. I supplement the Open Door policy by having Brown Bag Lunches which are held in various offices and which anyone can attend. The results of these efforts include shutting down a program which was giving cars to people who had abused their children; and, by taking the advice of a manager who had been trying to get attention for her idea for years, reworking one bureau's budget to create an additional $1.3 million in subsidized day care slots.

As a small business owner, I took pride in creating flexible, family-friendly policies based on the concept that what matters is what people do...not when they do it, or where. People are more productive if given flexibility for parental responsibilities. You might think this Department would have been the most sensitive in state government to family concerns, but it wasn't. So, with the enthusiastic help of an employee committee which worked out the details, I've initiated family-friendly and flexible leave policies so that people can fulfill their most important job -- being good moms and dads -- while feeling good about their work commitment.

The most important project we have launched in the nine months since I took this job, however, is a systemic overhaul of our juvenile corrections system... "Restoring Justice". Drawing on the experience of the 750 employees in our Juvenile Justice Division, we have gathered information from across the nation as well as from New Mexico's judges, prosecutors, legislators, and others who are concerned about making the system work better. The result is a plan which incorporates everything from new facilities to enlisting volunteers at the community level to work with kids in trouble, getting a 30% increase in capacity for a 10% increase in personnel. This is a dramatic change from the system we

have now, and shifts the focus from simply locking kids up to trying to get them on the right track early on so that we don't end up with our system just being a way station as they make their way over the broken bodies and lives of their victims into the adult prison system.

I believe that this Department can really change the future of New Mexico in three ways:

- By making the juvenile corrections system effective in getting more kids on the right track to productive and responsible lives in their communities.
- By achieving excellence in child welfare.
- By making government work from customer services to manager accountability for performance.

In thinking about what I've learned in the last few months about how to make a government agency work better, I've come up with my own "Top Ten" list:

10. Expect excellence.
9. What gets measured gets done.
8. Never tell people how to do things; tell them what needs to be achieved and let them surprise you with their ingenuity.
7. Encourage disagreement until the point of decision.
6. Enlist the line employees. They hate bureaucracy more than anyone.
5. Words and symbols matter.
4. Clarify the vision.
3. Bold moves are easier than minor corrections.
2. Hire creative non-conformists.
1. The job is not to row the boat; the job is to steer it.

This is the toughest job I've ever had. It is not easy to turn around troubled government agencies. The limitations are much more stringent then in private business--limitations which include archaic personnel systems, the political context in which we do our work, and the short time in which we know we will be here. A friend recently did an informal poll of business executives 100 per cent of them think government needs to be fixed. Not one of them was willing to give up their industry jobs to fix it. We need more people who are willing to cross the line, take the cut in pay, and fix things...because they can, because they believe it is important, because of some personal experience which gives them inordinate determination to make a difference.

Thank you for your attention. I would welcome the opportunity to respond to any questions you might have, either here today or in writing later, whichever works best for you.

Mr. CLINGER. Thank you very much. I think your top 10 list is an excellent one and one that we could certainly apply at in the Federal level as well.

Congressman Schiff.

Mr. SCHIFF. Thank you, Mr. Chairman.

I am going to be brief here just because we have other panels and witnesses waiting to testify. We could spend all of our time with this panel, I think that is pretty apparent. I thank them for testifying.

I am going to bring up one matter with each of our witnesses.

Secretary Wilson, first of all, I have to say I was impressed with your top 10 list. I do not know that we will ever see it on the David Letterman show, but I think it was very impressive. But the one area you mentioned a little earlier that I believe is the fact that you are trying to establish goals and milestones. I have to say that is unusual in government agencies, and in fact, that is often a frustration for government employees who are looking for how they are to be evaluated for their own career progression and for their own responsibility for their work in an agency. And I wonder if you could tell us a little bit about how that is going.

Ms. WILSON. Mr. Chairman, Congressman Schiff, I think in the packet in front of you, you do have a copy of the strategic plan for the Children, Youth and Families Department. We began, as I said, by clarifying—this is a classic strategic planning exercise, which I was familiar with from private life. And while there is a disclaimer on the front page talking about how ambitious this is, as my division directors will testify, I tend to be an ambitious person, and there are very few things that I use as management tools—the strategic plan is one.

There are 10 goals identified in there for things that we want to achieve. If I were to highlight two of those, it is the cost-effective expansion of the juvenile corrections system, and to achieve excellence in the provision of child and adult protective services. We developed strategies for each of those goals and then outcome measures, which are not process measures for how much money we put in, but what are we—are we actually seeing an effect of what we have done. We meet quarterly to review our progress, both on the plan, which is the milestones for implementing strategies, and then looking at the metrics for what kinds of results we are seeing.

We also tie the strategic plan to our budgeting process in the sense that when we went through our program reviews, one of the key things that every program manager was to brief on was the connection of their program to the strategic plan and to the department's mission.

So the strategic planning process is tied in to our budgeting process. It is probably my most important management tool within the department.

Mr. SCHIFF. Thank you.

Secretary of State Gonzales, I want to say that I was very impressed with your emphasis on technology. This is now I believe our fifth hearing in this series, and if there is one subject that we have heard over and over again, by at least one person at each of the hearings, it is the use of technology to increase productivity. And I think it is very clear that the U.S. Government is still some-

where probably in the 1890's, 1940's if it is lucky, compared to not only obviously private industry, but to many State and local governments in terms of how it functions.

I just want to say I think if ever there was a non-partisan issue, it is technology to improve whatever it is an agency is doing. Just one example, and that is people want copies of bills in Congress, they call us or write to us and we get the bill and we mail it to them. If we would simply put our legislation on line, then anybody with a computer terminal could read bills while we read bills and save all these obviously unnecessary steps.

So I want to compliment you for bringing that to our attention. Is there any particular area of technology that you have found most constructive in your office?

Ms. GONZALES. Mr. Chairman, Representative Schiff, I think the Office of the Secretary of State has taken a strong interest in what is going on out there. Any technology is needed, we have to stay on top of what is coming out because no sooner we are using one piece of information and overnight it could become obsolete. So we need to stay on top and in the forefront of everything. And I do believe that the office has come a long way. I see my job as one of giving information, and we have certainly done that. Not all the information is up on line, but phase by phase, it will be there, sir.

Mr. SCHIFF. Thank you.

Lieutenant Governor, although there is a lot of debate right now in Congress on this issue and how to go about doing this, there is a broad agreement—and I think across the political spectrum—that Washington is trying to do too much right now, that Washington has taken over almost every activity of government. And not only those who believe that government maybe should not be doing certain activities, that it ought to be left to the private sector, there is a very strong view that there are a number of government functions that ought to be performed by State and local government rather than a one-size-fits-all Washington approach.

It has gotten to the point where I can tell you that in meeting with constituents, if they bring up a State or local government issue and I try to explain to them, "well, we do not do that in Washington"—there are still a few things we do not do—not many perhaps but a few—and I say, "You know, you do have an elected Governor and other State officials and an elected legislature," they literally look at me like I have the proverbial holes in my head. It is quite obvious that the public has become very acclimated toward thinking of government only in Washington, and just not giving due regard to the elected officials who are right here in New Mexico, whether they are on this panel or your colleagues in State government or city and county officials.

Now my point is, in some way I am positive that some different programs now in Washington are on their way to State governments. I am not positive which programs yet or in what manner, we are still debating that. But I am sure they are coming, whether it is total control of Medicaid or welfare or greater control over Federal spending, we go to grants more than we go to strings attached. My question is, in your judgment after decades of power, governmental power—I am going on a little bit at length here, I know, but let me say for the sake of argument, a program the government

ought to be doing, that we would keep within government, after decades of government functions moving to Washington, do you believe the State of New Mexico and the other States are ready and organized enough to take these responsibilities back?

Lt. Gov. BRADLEY. Mr. Chairman, Representative Schiff—without a doubt. We are already duplicating it, and that is where the rub comes. What your scenario is saying is where the problem is. We have Energy, Minerals and Natural Resources, does the exact same thing as BLM. We have Human Services, does exactly the same thing as Medicare/Medicaid. We have total duplication of Federal and State programs. And what is happening—and of course, the public is totally confused between Medicare and Medicaid, they do not know the difference. So everything has come in as one. It is one government, is what they are seeing. So that part of your scenario is absolutely true, and that is the reason the focus from the public is Washington. When in fact they view State government as, "well, I am not sure if the State is here" except when you go out, interestingly enough to the business sector. They will tell you the difference because they are having to run duplicate paperwork on the exact same programs. They know the difference.

Are we ready? Absolutely we are ready. There is not one—I do not know that there is any major program that has been proposed of late by the U.S. Congress, be it welfare, Medicaid/Medicare, the land issues, none of those. We write our own grazing contracts, we write our own mineral, natural resource contracts separate from BLM. All this duplication. There is no reason that the State of New Mexico is not prepared to come right in and take it over, if—I will give you this caveat—if the Federal Government, when they give us those programs will take out their administration. If that is not done, we have accomplished nothing because if we get these packages that come in here—and I speak on it this way, three points: (1) give us base line 1995 on any of these programs; (2) cut out the Federal paper trails that we are duplicating, and efforts; and (3) when we save money, which I believe we will, do not penalize us, let us put it in a trust fund. We are ready.

Congressman—Mr. Chairman, Congressman Schiff, it is all sitting there.

Mr. SCHIFF. It sounds like you are not only ready, you sound fairly eager, to me.

Lt. Gov. BRADLEY. Absolutely, we are eager—as a matter of fact, we are eager.

Mr. SCHIFF. Well, my view of the Federal Government, again acknowledging the fact that there is legitimate debate over which programs should be where, of programs government should be doing, you know, I find enough from foreign affairs to the military to national scientific research that I think would keep us more than busy.

Lt. Gov. BRADLEY. Yes.

Mr. SCHIFF. If we were not doing so many other things.

Lt. Gov. BRADLEY. Mr. Chairman, I would submit that hopefully you would spend more time on those issues you just brought up and let us—what is the sense—where is the delineation between a State rescue helicopter that cannot land in a forest because a U.S. Forest Service is sitting out there saying you might hurt a blade

of grass or a tree? I mean, things have gotten absolutely absurd from this overlap of authority and who is doing what. We happen to believe in the State of New Mexico quite strongly that we can rule our own land a lot better than the Federal Government and we believe we can take those issues you are talking about.

Mr. SCHIFF. I am going to take one more second if I may, just to emphasize a point you alluded to. That is, the public may want to see us doing more of things. I think that this debate is broader than I have often seen it presented. Yes, there is an issue of what should government get out of, that can be done more efficiently in the private sector. Second, there is a legitimate issue of what government service can be best performed by State and local government.

But in my view, there are certain functions that are best performed by the national government. And just one, in my judgment, is scientific research. I cannot see—not States through universities of course are involved, but the national planning and financing of broad scientific research, in my judgment, requires a national level of planning. I do not think each State can be planning its own science. The same way with health care research. I think health care research needs to be planned nationally. And it is my view that what the public wants in the way of more efficient government can be downsizing in some areas, but increasing in other areas where they believe we can be and ought to be effective.

Lt. Gov. BRADLEY. Mr. Chairman, Representative Schiff, I agree with that. The honest to God truth is that the every day citizen that is sitting out here, they do not know any more about that research than we do, but they do believe it ought to be done, and I think your scenario is absolutely correct. What they are concerned about is down here in the trenches where they are trying to make a living. That is where their rub comes in of too intrusive a government. My personal opinion is that your No. 1 charge in the U.S. Congress is defense of our country and I think that involves all the aspects that you are talking about.

Health care research, we certainly do not have all of that, and you have got 50 States you could pull off of that you ought to be planning to work with, instead of coming down and trying to micromanage the every day life. I will give you this one example that just blew me personally away, and I have used it before and I understand now it has been repealed. But a few months ago, I was on my way to Clayton, NM, and I heard on the radio that the EPA had just discovered that the aroma of baking bread contained ethanol and that is dangerous for us. So they are going to write regulations on how to bake bread. Now I am going to submit to you that the public does not believe this is something that our Federal Government ought to be dealing with. They ought to be dealing with defense issues, they ought to be dealing with—OK, if ethanol is a serious problem—what they ought to be dealing with is the cancer, where are we with the cancers, where are we with the AIDS program, where are we with these. You are going to come down and tell my grandmother how to bake bread? Come on, give me a break. This is where it has gone. Now I did understand that Senator Domenici told me that the EPA did make that statement but they

have now backed off and they are not going to do that. But that is how absurd we have gotten.

Mr. SCHIFF. Thank you, Mr. Chairman.

Mr. CLINGER. Thank you, Congressman Schiff. Congressman Horn.

Mr. HORN. Thank you very much, Mr. Chairman. I have enjoyed the testimony of all three of you, but I would like to concentrate on Secretary Wilson. You have made a very impressive statement. How many Federal programs do you have that money flows through your department for implementation?

Ms. WILSON. Mr. Chairman, Congressman Horn, about 54 percent of our budget—my department is a $200 million budget—about 54 percent of it is Federal funds. A significant portion of that comes from Medicaid but we also have a large number of other programs including the Federal Nutrition Program, the Child Care and Development block grants, child care support for low-income working families as well as those working off welfare. So there are a variety of different programs. But in gross numbers, it is a little over $100 million.

Mr. HORN. Does your agency directly administer those funds at the local level, or do you have a partnership relationship with the counties and possibly the cities for implementation, and could you define those?

Ms. WILSON. Mr. Chairman, Representative Horn, in this State most of those programs are operated by State government. There are some block grants that are passed through to local governments but for the most part—for example, our family nutrition program is run by State government, contracted out to providers or licensed child care centers. So it is principally at the State level rather than county or city.

Mr. HORN. Does your agency administer the county welfare programs?

Ms. WILSON. Mr. Chairman, Representative Horn, the welfare payments are made by the Human Services Department. They cut the checks. In our department, almost all of our case management is eligible for some Medicaid funding for kids who are abused and neglected. Kids who are in our custody get Federal funds for being in the custody of the State as abused and neglected children. So all of the kids—we operate the single point of entry managed mental health care system in New Mexico, and almost 92 percent of those kids are Medicaid eligible. That is a $70 million program.

Mr. HORN. I want to get straight in my own mind, in terms of what we think of as the Federal/State/county partnership in welfare, where sometimes the counties put up the money for general relief to tide people over, but you have basic State and Federal programs. Welfare is administered by another agency in the State government?

Ms. WILSON. Mr. Chairman, Representative Horn, the welfare payments are made by the Human Services Department.

Mr. HORN. Who does the casework evaluation to see if a person is eligible?

Ms. WILSON. The eligibility is done by the State Department of Human Services, except for child care, which is done by my division.

Mr. HORN. Is done by yours. Because the next question, which is what I am leading to, just figuring out how it works, is when we devolve these, in many States you have large State bureaucracies, and the real work is done at the county level or the real work is done at a city level or a special district level, depending on program. And so my query to you perhaps will not get the answer I am seeking, but I am seeking to what extent is the State willing to cap the amount it skims off the top when it is the counties, let us say, in some of these areas that are doing the real work. Now my mother happened to be a director of county welfare for the State of California, and she had half the county budget, and that is in the 1940's and 1950's.

The question though is if we move from the Federal Government, get that money moving to the States, we really do not want another big State bureaucracy, which we have in Sacramento. You might not have, but we have in California. We want that money getting down to help people. So the question comes, when these bills hit the floor of the House, should some of us be offering amendments to say the State may take no more than 10 percent, 5 percent, or whatever percentage it is? What would be the reaction for those Federal programs you do have flowing through, if any go down to the local level?

Ms. WILSON. Mr. Chairman, Representative Horn, in New Mexico—I know it varies State by State—in New Mexico, most of those functions are handled by State government and we have—for example, my office has county offices and local offices throughout the State. So it is going to vary State by State. In New Mexico, it is largely done at the State level.

My biggest concern, and I will be direct about this, is that many of the regulatory controls and the strings that have been attached at the Federal level are not going to change, because they are done by regulation, not by law. And until we get rid of the regulators, the thousands of people who have spent their lives writing Medicaid regulations, nothing is going to change. I could fill my office with regulations on Medicaid, and those flow down to the 12 kid group home in Clovis, NM, where they spend 28 percent of their budget just trying to comply with onerous Federal regulations. I do not want to see us take the Federal guidelines on Medicaid and erase the cover and put New Mexico guidelines on Medicaid. We do not want to have Medicaid, a junior version of it, here in New Mexico. We need to rewrite the book. And to do that, we need to get rid of the large Federal bureaucracy, or nothing is going to change.

Mr. HORN. Well, I agree with your whole point on getting away from process and looking at output in terms of goals achieved. And there have been some very exciting experiments as we have had before our committees and subcommittees. So in the case of New Mexico, you are willing to say, look, give us the money and say here are the goals we must achieve and then let us go achieve them. That is fine with me. So thank you.

Mr. CLINGER. Thank you. We are delighted to have been joined by Congressman John Shadegg from the great State of Arizona, a very valued member of the Government Reform and Oversight

Committee and one of the most dynamic members of the freshman class of the 104th Congress.

John, do you have any comments or questions?

Mr. SHADEGG. Well, thank you, Mr. Chairman, and thank you for those kind remarks. Now I have to try to live up to them. I apologize for being late, I was unavoidably detained in getting here, even though Arizona is closer than I guess anybody but Steve Schiff came from.

Let me follow up by saying I guess in some ways I bring you greetings from the freshman class of the 104th Congress. And listening to you, Ms. Wilson, I think you would fit in that class quite well. I do not know if you are considering running for Congress, but—[laughter]——

Mr. CLINGER. Steve hopes not.

Mr. SCHIFF. I hope not, not in the near future anyway.

Lt. Gov. BRADLEY. Wait a minute, Congressman. We have her hired on contract.

Mr. SHADEGG. Well, when you talk about doing away with whole Federal bureaucracies and not just picking up the Medicaid regulations that we currently have and passing them down to the States, you are talking the way I think many members of my class feel. But I will tell you it is not easy to achieve that. I think it is not easy to achieve that because of fear, fear of change. So many people saying well but if the Federal Government does not do it, will the State. And you would not believe the number of people who troop through my office and say gee, we think this idea of returning authority to the States and to the localities and the people is wonderful and we like your ideas of reinvigorating the 10th amendment and we are really thrilled with that, but we have this one program that applies to us and it really is very good. So you really should not include it in all of that because it is working and we are comfortable with it.

And so we get great resistance to change and it does not seem to carry us very far.

One of the initiatives of the freshman class has been to propose that we should abolish the Department of Education. We initially proposed the abolition of three separate cabinet level departments—that appears not to be going to occur this year. If we are lucky, we will get rid of one, the Commerce Department. And even in getting rid of any agency, you really wind up identifying those functions in that agency that perhaps the Federal Government should not be doing at all, and those functions which should be passed down to the States and localities and those functions which really do need to be done by the Federal Government and get shifted out somewhere else.

I guess my question of you, reading your background and seeing your involvement with children, is to ask you to focus for a minute on the Federal Department of Education, and tell me what you see it achieving or not achieving, tell me where in your position you are able to perceive some value coming from the Federal Department of Education or whether or not you do not see that. Just I guess your general brush. I have you make a broad sweeping statement about Medicaid regulations, which I liked. I am wondering if

I can get you to make a broad sweeping statement about the Department of Education I will like.

Ms. WILSON. Mr. Chairman, Representative, something tells me you may have been talking to Congressman Schiff about my interest in public education and the education of children. You can probably get me to make a broad sweeping statement about the Department of Education, not only at the Federal level but at the State level. It is my belief that the best—that the control of education should be in your neighborhood school. I happen to be a strong believer and would like to see in this State a significant reform of public education in the State of New Mexico, devolution of authority to the local level, greater involvement and accountability to parents, because I think and have read quite a bit about systemic education reform.

There are very few things, in my view, that the Department of Education does at the Federal level which are of value in the classroom. And that is the standard. There are some things in terms of finding experiments that work and promulgating the information about those things, but I am very strongly of the opinion that localities should be controlling the education system. And that goes far beyond the Federal level, it goes to the State level as well. I happen to be a believer in vouchers, starting with vouchers for at-risk kids. At day 40 in the State of New Mexico, we have the head count for the number of kids in school and it determines the funding formula. On day 41, 42 and 43, the number of referrals for chronically truant kids to my department goes through the roof. It is my view, that the money should follow the kid and when we have at-risk kids who are failing miserably in the schools where they are, that we should give vouchers to those kids to go to private schools if we can save them.

So there are a variety of things I think we need to do in education, all of them happen in the school and not in a Federal bureaucracy in Washington. I vote with you.

Mr. SHADEGG. Interesting you should bring that point up because the Governor of my State, Governor Symington, has just made front page headline news by proposing to abolish the State Department of Education. I am not certain that I agree with him on that proposal, I have not looked at it closely. I have great respect for our superintendent of public instruction, who is not sure that he is right about that, but who, to her credit, has said she could do with probably 40 percent fewer people than she has because she believes, I believe as you do.

Let me ask you, as we confront the issue of trying to bring about change at the Federal level, you have obviously confronted that in some of the changes you have achieved, what strategies—and I guess maybe I will direct this to the whole panel—what strategies have you identified that work in trying to alleviate people's fear about changes in government and particularly about downsizing or re-examining the role of government. Because what we always get is the argument, people—for example, I have fought vigorously to end the Goals 2000 at the Federal level, not because I do not believe in some of its objectives, but because I simply do not believe the Federal Government has a role in education. And I would see us not only end the Department of Education but then leave that

money—first of all, send that money back to the States to begin with, but then ultimately get to a process where we do not take it to Washington at all.

But in any event, we have to overcome people's fear and when we propose abolishing the Department of Education, they say oh, my gosh, but in some States they will not educate kids the way we think they ought to be educating. And I think that is our biggest challenge, at least for those of us working at trying to change the role of the Federal Government. So I am interested in any strategies you have that can assist us in achieving that fight. I think we know where we want to go, the question is how do we get there.

Ms. WILSON. Mr. Chairman, just let me throw out three things that are important in that regard. There were rumors during the campaign and the time that I took this job, that the agenda was to abolish the Children, Youth and Families Department, tremendous fear about that and anxiety among employees. My advice in those circumstances and when you are facing tremendous change is, No. 1, communication is critical, with your employees and the public, on where you are going and why and you have to keep pushing that message home.

Second is boldness. I had only been in this job 3 weeks when we announced the massive reorganization of the department. That put to rest most of the concerns about where we were going because everyone knew, they had the road map. So there is fear of the unknown as well as fear of what might be reality. And so if you can put the unknown behind you, you solve many of those problems.

And third is the involvement of line employees. In every major initiative we have done, everything from redoing our personnel policies to restoring justice, we have involved line employees from a broad cross section of the department. This is not just a top-down answer, it is a bottom-up answer. And the communication through the grapevine does much more for you than you could ever do if line employees were not involved. So it disperses some of the distrust.

But if I were to choose one of those three as the most important, it is the importance of communication.

Mr. SHADEGG. Ms. Gonzales.

Ms. GONZALES. Mr. Chairman, Congressman, the Office of the Secretary of State has no authority over the State Education Department, but what I would like to say is that the employees in my office, they are aware that there is an open door policy, a lot of the innovations that have occurred in my agency have come from the individuals themselves. I take a great deal of time to listen to their ideas and go along with them as long as they work. If they do not, then we look for something else. But as far as innovation in the office, the employees come in and we talk about it, they run off with that and we follow up.

Mr. SHADEGG. If I could just follow up with a brief question. Your office administers the election laws?

Ms. GONZALES. We oversee elections, we also handle a variety of filings that are very crucial to the commerce and industry of New Mexico. We are also the oversight and administrators of the ethics and campaign reform. And so although we are a small agency, we have a lot of responsibilities.

Mr. SHADEGG. On the issue of one-size-fits-all, have you had any difficulties with the Federal motor/voter law?

Ms. GONZALES. No. As a matter of fact, it was implemented here in New Mexico back in 1992. The sponsor of that bill was then Senator Marty Chavez, now Mayor Marty Chavez. And so we started with motor/voter back in 1992. The agencies have been very cooperative, the cabinet secretaries see to it that their employees have been doing their responsibility, and it is going very well, sir.

Mr. SHADEGG. Thank you.

Ms. GONZALES. As of January this year, we have had over 38,000 new registered voters.

Mr. SHADEGG. In Arizona, we had motor/voter ahead of time.

Mr. SCHIFF. Would the gentleman yield for a moment. And I know have to move on here to the next panel very shortly, but I just want to say, Ms. Gonzales, I just want you to know I said in every State we have had testimony about technology, in every State we have had testimony about the motor/voter act and it has all been negative, except your observations, especially on two items. One is that officials like yourself and the county clerks cannot ask for identification when someone is registered.

Ms. GONZALES. There are agency codes, you are right.

Mr. SCHIFF. Right. And there is a great deal of complaint about voter fraud in that regard, and second, you can no longer purge voters from the list after they have missed so many general elections. So that is another invitation to fraud. Someone could check the list and go in and pretend to be somebody, on the assumption that that person is no longer there voting. Have those two problems confronted you?

Ms. GONZALES. As far as the not purging, that is correct. The county clerks will keep an active and inactive file. Again, if you go to the polling place and they tell you you are not on the roster, they do fill out an affidavit right then.

Mr. SCHIFF. I yield back.

Mr. HORN. Would the gentleman yield, at least for a comment?

Mr. SHADEGG. Certainly.

Mr. HORN. It should be noted that when that motor/voter bill was passed in the 103d Congress, controlled by our friends on the other side of the aisle, the Democratic Party, a motion was made in committee, to purge the lists as we had in California. If you did not vote in two general elections, you had to re-register, and to purge the list at the 5-year period, the 25-year period and even the 100-year period, that was voted down by the other party. It is obviously something a lot of us feel fairly strongly that perhaps after a few years those lists should be purged because of the great fraud that is occurring.

And if I might, Mr. Chairman, I would like to ask the Lieutenant Governor one question, because that is what faces us in California. How many illegal aliens are coming into New Mexico every year? Do we know?

Lt. Gov. BRADLEY. Mr. Chairman, Representative Horn, we do not know exactly how many are coming in, it is not nearly what it is in California, but we do have a lot of them and it is getting—budgetary wise, it is getting to us. We are bussing them to our schools, and I do know, Secretary Wilson may have a feel on some

of this, because we are doing the health care clinics, and cost-wise, we just had to do a special appropriation for one of the high schools down there on the border, we did not have classrooms. It is not nearly as dramatic as it is in California, but it is significant——

Mr. HORN. We gain a half congressional district a year from other States as a result of illegal alien population. We gain five between every census, five to seven.

Lt. Gov. BRADLEY. That is amazing. I would—Mr. Chairman, I would like to answer Representative Shadegg's question regarding how do you deal with all of this fear that is out there.

First of all, I think it is important that as elected officials, and especially legislators, having been a former Senator in the State of New Mexico, you need to delineate between what I call two separate groups out there. One is the every day citizen, who goes home at 5 and watches the news, only reads headlines, does not get into the nuts and bolts of what is happening, falls asleep in the easy chair and goes on. And the other group is the one made up of legislators, advocacy groups, the people that are pushing their programs, as some of you have talked about this morning. That group is the most vocal group, that is the group that gives you most of everything. The key is what is that citizen really thinking and where are they coming from. And you need to start with the idea that you need to keep those two separate.

I know in the heat of battle in the State of New Mexico in the legislature, 9 times out of 10, the public views what we are doing in there, and we think it is the most serious thing in the world and they view us as a bunch of idiots floating around here passing some of this stuff. But in the environment we are in, it is a different attitude.

So first, delineate between the two. And then, as Secretary Wilson said, this ties into who is your audience, who are you really working for—that is the communication skills. And the communication skills, at that point, that is where you have got to bring in the citizens, as I said in my testimony, of going out and letting them tell us what is going on. And in the communications, you have got to have your employees, the government employees, knowing what is going on also. Do not leave them in the dark.

You have to have a plan. That is the third component that I understand, and it has to be a common sense plan. When we lose sight of common sense, that is when we lose our constituency and our citizens. And quite frankly, gentlemen, I do not think any of us would disagree that 9 times out of 10, we come out with some of the most absurd statements that do not make any sense whatsoever to the citizens.

So I would say that the three-pronged approach that we have taken is that we delineate between the two groups, you deal with them separately, they are two different types of groups; communicate; and have a plan. If you do not have a plan with that common sense value in there—and the employees are responding with it too. I mean, they like it.

Thank you, Mr. Chairman.

Mr. SHADEGG. Thank you, Mr. Chairman.

Mr. CLINGER. Lt. Gov. Bradley, Secretary Gonzales, Secretary Wilson, we want to thank you very much for your very valuable

contributions to what we are trying to do here, and we will look forward to continuing the dialog with you in the future as we move ahead.

We are going to run out of time here if we do not move to the next panel. So again, thank you very much.

Lt. Gov. BRADLEY. Mr. Chairman, Representatives, thank you very much for your time.

Mr. CLINGER. Thank you.

And now I would ask Congressman Schiff to introduce our next panel of witnesses.

Mr. SCHIFF. Our next panel, representing local government—first testifying on behalf of Mayor Martin Chavez of Albuquerque is Chief Administrative Officer Lawrence Rael. I want to say that Mayor Chavez has lead a number of initiatives in our city that I think have been very successful. For example, I would ask the members to note how much graffiti they did not see in our community.

And I would like to welcome County Commissioner Barbara Seward to join us. Commissioner Seward, among other positions, is now serving as the chair of the Urban Transportation Planning Policy Board in this area. Commissioner Seward has visited Washington a number of times to meet with the New Mexico congressional delegation on traffic problems in the area and how the Federal Government can work with communities.

Mr. Chairman, before recognizing the two witnesses before us, I would like your indulgence for a moment, just because we have a number of people who have come into the hearing room since we began, just to briefly restate how the hearing is taking place here.

We have three panels of witnesses scheduled. The first panel has just concluded, this is the second panel about to be recognized. Following that, we have I believe it is eight witnesses invited because of their positions or their constituencies they represent in the community, to testify for up to 5 minutes each. And then if there is time, the chairman has given permission to open the microphone to anyone who might want to speak for a few minutes, but I have to say, because we have to get to Washington, we cannot go too many minutes past 2 here. So that may or may not be available. I just want to say that knowing that, we did invite 28 organizations to submit written statements, which will be the equivalent of oral statements when the record is printed.

And one last word, I have the list here of the organizations we invited and it should be available in the back, to demonstrate that we invited across-the-board in terms of business, labor, professional and different philosophical organizations. But I note that one of the groups was left off the list and it is the New Mexico Sierra Club. And I saw Jay Sorenson a moment ago here, and I want to say they also should be on the list and we just want to make sure that they were contacted.

Mr. CLINGER. Their testimony is back there.

Mr. SCHIFF. OK, so that answers that question. But if you are interested and you do get the list, they should be added.

Thank you, Mr. Chairman.

Mr. CLINGER. Thank you. You perhaps heard my statement to the first panel, that it is the custom of this committee to swear all

witnesses, so we do not prejudice any witness. And if you do not object to that, I would ask you to raise your right hands.

[Witnesses sworn.]

Mr. CLINGER. Let the record show that the witnesses answered in the affirmative, and Mr. Rael, we will start with you.

STATEMENTS OF LAWRENCE RAEL, CHIEF ADMINISTRATIVE OFFICER, CITY OF ALBUQUERQUE; AND BARBARA SEWARD, MEMBER, BERNALILLO COUNTY COMMISSION

Mr. RAEL. Mr. Chairman, thank you very much for this opportunity to visit with you. On behalf of Mayor Chavez and Council President Vince Griego of the Albuquerque City Council, we welcome you to Albuquerque. I hope you all have had an opportunity to at least see the beautiful balloons up in the sky this morning.

Mr. CLINGER. We did.

Mr. RAEL. It is one of our premiere events, in New Mexico actually, and especially for the city of Albuquerque.

I am the chief administrative officer of the city of Albuquerque, overseeing the day-to-day operations of municipal government.

Rather than read through my entire testimony word-by-word, because of the shortness of time, let me go through some brief remarks regarding the issues we would like to present to you this morning.

First of all, being a former Hill staffer myself working for U.S. Senator Jeff Bingaman from New Mexico, I can tell you that I am sure your task is a monumental one and I do not envy you for that.

But let me indicate to you that being in local government and being, quote, a bureaucrat in local government, that not all bureaucrats are bad people. Let me indicate to you also that the organization, I think, in terms of government after working in Sante Fe for several years at the State level and working in Washington and now in Albuquerque, that flexibility is probably the key and most important aspect of local government and its ability to provide services and to respond to the individual needs of its citizens, in a more direct and fundamental way.

The city of Albuquerque is a very diverse service corporation which serves many residents. We serve residents within the city and because we are the biggest city in the State, we have literally tens of thousands of people that commute to Albuquerque and work in our jurisdiction.

The city has invested tremendous public resources to keep track of our services. We have developed new ways to determine what they need. We have created many new processes to ensure that our citizens participate in identifying and addressing the priorities of our community.

We are restructuring our organization, especially our service delivery areas, to function better and to meet the needs of our customers. We seek ways to evaluate our performance and obtain feedback from our customers.

We create new ways to measure our outputs and their effects on the community.

We have developed new public and private partnerships as well as alternative service delivery strategies to meet our customers' needs.

We aggressively promote our services to ensure that we educate the citizens of the community and to explain to them their responsibilities as citizens, to the community.

Mr. Chairman, members of the committee, I believe that government in the 1990's and at the turn of the century, will be a government that is more directed and if it is to be effective, it has to include more and more participation by those people that it serves. Especially is it critical, I think, in local government in that we deal with the public on a day-to-day basis.

The city has invested millions of dollars in creating a geographical information system that allows us to track customer demands and service delivery areas across the city. We are able to map many different services from crime incidents to infrastructure investments to learning how to correlate service demands and needs to make better investments. Just a few examples of the kinds of services this provides, we have many utility companies in the State and in the city that utilize our geographic information systems to make decisions about extension of lines and services throughout the community. It is a basic fundamental process that we have in the organization that has served us very well. It has helped us with other areas, including identifying service areas for the community, to provide different levels of services.

We are using modern techniques to go out and gauge from our community, from our citizens, as to what they view as important needs that the organization should be providing. We conduct annual surveys of our residents, seeking their perceptions about the quality of life and the services that relate to these concerns.

Ironically, as citizens are closer to their government, they feel much more comfortable about that. Our surveys in the last 4 or 5 years that we have done them have consistently showed that the citizens of this community have a much, much better relationship with their local government and feel much better about their local government than they do of their State government and they do of their Federal Government. And that is very true, and it is a position that puts a lot of responsibility on me as an administrator and on the organization to provide the services, because it is important that we continue to keep that relationship with our citizens.

The city has incorporated a non-profit organization run by citizens, that continues planning strategies for the city to become more and more responsive to the community. This organization is called Shared Vision. This organization is comprised of citizens of the community, business people of the community, different other non-profit organizations that meet annually to look at the city, at the level of services that we are providing and to give us feedback in terms of how we should look at the next year in terms of providing those services.

We are also extremely organized with neighborhood associations through the Office of Neighborhood Services, and work with them to assure that they understand the issues and that the issues are made clear and concise to the individual neighborhoods within the community.

We are currently embarking on a new initiative called Community Identification or Community ID Program. Through surveys and interviews with residents, we have broken up our city into 10

large geographical areas. We will work with individuals and groups in each of these districts to qualify the conditions of these areas and develop strategies to solve problems. We involve all service sectors in this process. More and more the city acts as the broker, not as the direct service provider.

Restructuring for better service. Bringing our local government even closer to the people is a primary objective of our restructuring. Connected to community-based planning is community-based policing. Like many other communities, Albuquerque also has a crime problem. Making the police part of the community is our primary strategy to respond to our enforcement needs. We are also concentrating on crime prevention, attacking gang activities and not tolerating these kind of activities in our community. Our award-winning anti-graffiti program quickly removes tags throughout our community. And that is an example of where the city of Albuquerque had its program incorporated with one of the private sector in which the private sector was also doing their effort to remove graffiti, and we collaborated with them and we now have had one of the award-winning programs in the country in terms of removing graffiti from our buildings and public right-of-ways, et cetera.

We recently brought the city senior managers into our street to clean our streets. We had 1 day when all senior managers of the organization went out and helped clean up the streets, literally cutting weeds, picking up trash, removing the garbage from the streets, in order to show the community that the organization is in stride with the community and cares about its citizens and about the way the community is viewed by other people of the area.

We are building a one-stop shop to remove the artificial, bureaucratic barriers to customer-oriented development projects. Appropriate divisions from within five departments will be housed together to ensure quick, fair and efficient services to the development community. Currently we have five departments that function, as you all can envision, as five different organizations, which have some little aspect in the development process. We are collaborating all those departments together to form one stop shop to make more efficient use of our resources and to provide the customers with more and direct services in a real way.

Additionally, as Congressman Schiff has indicated, the use of technology has been one that we are also looking at in terms of our efficiency quota.

Real time routing and scheduling for our para-transit system is a project that is in collaboration with Sandia National Laboratories, one that the Congress and the Federal Government has helped fund to provide real time tracking for our para-transit service. Currently, under the Americans with Disabilities Act, we provide para-transit service for individuals within our Sun Trans, which is our bus company, or operation. We are experiencing many difficulties with scheduling because of people's different needs and people's desires to do different things and requesting para-transit service. This real time study and scheduling program will help us make more efficient use of our Sun Trans buses and our vans as we move people around the community to better provide them a service.

The city is establishing baselines for our performance to provide an environment for continuous improvements. To make more rational allocation of resources, we must understand better the effectiveness of our service—not just how many widgets we make, but how effectively we make them and how effective we are in addressing the needs of our customers. This is the challenge I think of this government in the 1990's. We are doing performance-based budgets that will become more and more real as we move toward the next century.

Alternative service delivery and public/private partnerships. Like most cities, we are seeking efficiencies in our operation. In Albuquerque, this means that we are not only looking to the public sector for help in delivering services, we are also looking to the private sector for models of operations that we can employ within our organization to meet community needs cost effectively. One example of that is that Intel, the computer manufacturer giant that resides just in Rio Rancho, has offered to provide the city of Albuquerque with in-house training to better understand the safety environment that is so important to an operation like Intel, but that also is equally important to an operation in Albuquerque such as the solid waste department which delivers our solid waste programs. Traditionally, it has been one of the highest areas of risk management cases. Intel, along with Quality New Mexico, has come into our city and we are working with our managers in that department to establish better safety programs and safety-related functions, so that we can become more efficient and also become safe at what we do. And the dividends are beginning to pay off. We have actually seen a decrease in some of our risk management cases as a result of getting the private sector involved and asking them to help us with our processes.

We are experimenting with contractual services not only with private industries around services like golf courses. Traditionally, the city of Albuquerque has always had those courses run by the city. We are looking at the possibility of contracting them out. With the non-profit sector, we are also looking at the human resources needs of our community. Currently the Federal funds that come to the State, that come to cities like Albuquerque, are predominantly provided and delivered by non-profit organizations, organizations outside the city bureaucracy that provide those services.

We are also looking to eliminate unnecessary levels of government by creating agreements with neighborhood governments for delivery of services on a regional level. We certainly have an issue in Albuquerque, as many rural States in the West are beginning to experience, regionalism. That is an issue I think that is much more strong and more prevalent in the east coast because the size of communities in States like New Mexico, regionalism has not been in the forefront as it should be, and exploring opportunities to move in that direction so that citizens get provided better service in a greater way.

And we are also looking at the entrepreneurial spirit, as we talked before. We have an individual contracted with us from the Federal Government—actually not from the Federal Government, from PTI from Washington, DC. We are looking at entrepreneurial opportunities to develop ways in which we produce services that we

can sell to the public sector to create self-sustaining operations within the organization. One example of that is our composting facility where we are processing the sludge through our wastewater treatment plant. That sludge is then sent to our composting processing facility, and then that byproduct is sold to private companies to develop peat moss for landscaping and for other benefits of that nature. So we continuously are looking at those kinds of opportunities so that we can rely less on the tax dollar and rely more and more on services that we provide.

Mr. Chairman, I know that some of the issues that are before you in Washington are very big and very difficult to get a handle on. We commend the Congress for their move toward unfunded mandates and to look at that issue. That is an issue that is extremely important to local government because in the end, those issues become a part of our operation or in some way reside at our local level.

We also look at you for some relief in the regulatory processes. As Secretary Wilson indicated to you, some of the regulations that are imposed by the different programs and by the regulators in Washington are very onerous and require a great deal of staff just to comply with those regulations. And I think we lose sight of the service that we are actually trying to provide. Examples of those are the regulations with clean water; regulations that are a part of the Department of Transportation to obtain Federal transit grants for our transit systems; Job Training Partnership Act that is up for debate and consideration in Congress is one that also creates a great deal of bureaucracy because of the regulatory nature of those programs. I would also indicate to you that, again as a former Hill staffer, that many times it is my impression that legislation at the national level is made by those who have the most votes, obviously, but also those that have the most influence. And the big cities, obviously most of the time, influence how regulations are drafted and by that I mean cities that are regionally different from the rural west that we have here in New Mexico. And we need to be more flexible at the congressional level and at the national level, to look at how regulations that affect east coast cities or east coast jurisdictions do not necessarily apply to rural areas in the western part of the United States or to rural communities in States like New Mexico. They become very onerous and what you end up really having is you end up having the individuals providing those services because creative in terms of how they provide those services. And I think we lose sight of what the mission of those services is really all about.

Let me end my discussion by just indicating to you that for those of you who have not read Steven Covey's book, "The Seven Habits of Highly Effective People," there is one concept that he talks about and that is to begin with the end in mind. And when we look at downsizing a government, whether it is at the local level, the State level or the national level, it is I think imperative upon all of us as either appointed or elected officials to look at what the end result is going to be. Change for change sake is important from one perspective, but it is my experience and my impression that the people of this country and the people of this community and this State are concerned when change occurs and it has not been well

thought out and issues that have not been reviewed or communicated completely to the public are left in abeyance or hanging out there, that have not been resolved, people begin to wonder what government is about. So changing just for change sake is important but it also needs to be reviewed in the beginning with the end in mind. Begin where you want to go, because there are many programs that will get cut and that will be affected, and many people will be at your doorstep knocking to tell you we want those programs back because they served this and this and this. And it is imperative upon all of us to become educated and well-informed on the impact of those programs, and particularly as they affect the poor people and the people of rural States such as New Mexico that are sorely dependent on some of those programs to become better citizens and a better part of this country.

Finally, Mr. Chairman——

Mr. CLINGER. Yes, can we bring it to a close?

Mr. RAEL. Yes. Mr. Chairman, all organizations need growth to prosper and government clearly is one that needs to begin to look at its downsizing mechanisms. In Albuquerque, we are concentrating on growth ideas and creativity to meet community needs, not growth in government employment. Government clearly is being challenged more and more every day and government can succeed only by putting the customers first and seeking creative solutions and partnerships that the community needs.

Thank you, Mr. Chairman.

[The prepared statement of Mr. Rael follows:]

City of Albuquerque
P.O. BOX 1293 ALBUQUERQUE, NEW MEXICO 87103

COMMENTS TO THE HOUSE COMMITTEE ON GOVERNMENT REFORM AND OVERSIGHT BY LAWRENCE RAEL, CAO, CITY OF ALBUQUERQUE

Mr. Chairman and members of the House Committee on Government Reform and Oversight, on behalf of Mayor Martin J. Chavez, Council President Vince Griego, and the Council of the City of Albuquerque, welcome to the City of Albuquerque. I am the City's Chief Administrative Officer, overseeing the day to day operation of our municipal government.

The City of Albuquerque is a diversified service corporation, which serves every resident and business within our jurisdiction and many outside of our boundaries. We deliver hundreds of different services and products to nearly every identifiable customer segment living and/or working in our City. We literally have millions of customers.

- The City has invested tremendous public resources to keep better track of and serve our customers.
- We have developed new ways to determine what they need.
- We have created many new processes to ensure that our citizens participate in identifying and addressing the priorities of their community.
- We are restructuring our organization, especially our service delivery functions to better meet the needs of our customers.
- We seek ways to evaluate our performance and obtain feedback from our customers.
- We are creating new ways to measure our outputs and their effects on our community.
- We are developing new public private partnerships, as well as alternative service delivery strategies to meet our customers' needs.
- We are aggressively promoting our services to ensure that we educate our citizens of the opportunities, as well as ensure that they understand their responsibilities.
- Finally, we are seeking more business like ways to finance services.

IDENTIFYING OUR CUSTOMERS

The City has invested millions of dollars in creating a geographic information system (AGIS) that allows us to track customers and demands-for-service geographically and visually. We are able to map many different services from crime incidents to infrastructure investments and are learning now how to correlate service demands and needs to make better investments.

DETERMINING NEEDS

We are using modern techniques to understand what our customers want from their public and community-based organizations. We conduct an annual survey of our residents, seeking their perceptions about the quality of life and the City services that relate to these concerns.

More and more, City departments are surveying customers to obtain feedback on the quality and efficacy of our services. We hold focus groups of stakeholders before designing services.

PARTICIPATION and COMMUNITY PROBLEM SOLVING

The City has incorporated a non-profit organization, run by citizens, to perform strategic planning techniques continuously to alert City government of emerging community priorities relating to our environment, transportation systems, community and economic development, and more. We call this organization, Shared Vision.

We have also extensively organized our neighborhood associations through an office of neighborhood services and work with them to ensure that they understand the issues that impact their immediate areas. We communicate to citizens through many different media but focus on their associations. We hold many briefings throughout the year at neighborhood events.

We are also embarking on an exciting new initiative, called community-based planning. Through extensive surveys and interviews with residents, we have broken up our large city into 10 community identity areas. We will work with individuals and groups in each of these districts to quantify the conditions of these areas and develop strategies to solve area problems. We will involve all the service sector in the process. More and more the City will act as the broker, not the direct service provider.

RESTRUCTURING FOR BETTER SERVICE

Bringing our local government even closer to the people is a primary objective of our restructuring. Connected to community-based planning is community-based policing. Like many communities, Albuquerque has concern about crime. Making the police part of the community is our primary strategy to respond to our enforcement needs. We are also concentrating on crime prevention, attacking gang activities, not tolerating intrusions on our community. Our award winning anti-graffiti program quickly removes tags throughout our community. We recently brought the City's senior managers into the streets to remove weeds and litter and at the same time remind our community that pride is all our residents' responsibility, not just work crews assigned to remove eyesores.

We are building a one stop shop to remove the artificial, bureaucratic barriers to customer-oriented development processing. Appropriate divisions from five (5) different departments

will be housed together to ensure quick, fair, and efficient processing of development applications.

EVALUATION AND MEASUREMENT

The City is establishing baselines of our performance to provide an environment for continuous improvement. To make more rational resource allocation decisions we must understand better the effectiveness of our services -- not just how many widgets we make or how efficiently we make them, but how effective we are in addressing the needs of our customers. This is the challenge of the service industries of the 90's.

ALTERNATIVE SERVICE DELIVERY AND PUBLIC PRIVATE PARTNERSHIPS

Like most cities, we are seeking efficiencies in our operations. In Albuquerque this means that we are not only looking to the private sector for help in directly delivering services. We are also looking to the private sector for models of operations that we can employ within our own organization to meet community needs cost effectively. We are experimenting with contracted services not only with private industries around services like public golf courses, but with the non-profit sector in meeting the human needs of our community. We are also looking to eliminate unnecessary levels of government by creating agreements with neighboring governments for the delivery of services regionally. And we are injecting an entrepreneurial spirit into our government as part of a national demonstration program, using business planning processes and value based pricing models to create self-sufficient services that survive on their ability to meet customer needs.

Finally, Mr. Chairman, all organizations need growth to prosper and government is no exception. In Albuquerque we are concentrating on the growth of ideas and creativity to meet community needs, not growth in government employment. Government clearly is being challenged more than ever before and government will succeed only by putting their customers first and seeking creative solutions and partnerships to meet community needs.

Mr. CLINGER. Thank you, Mr. Rael.

Mr. SCHIFF. Mr. Chairman, excuse me, before we recognize Commissioner Seward, I just want to introduce State Representative Ted Hobbs, who is here. And also from the TVI Board, who is our host here today, Pat Chapman is here. And are there any other elected officials who have not been recognized?

[No response.]

Mr. SCHIFF. Thank you, Mr. Chairman.

Mr. CLINGER. Thank you. Commissioner Seward, please.

Ms. SEWARD. Chairman Clinger and members of the committee, I am delighted to have been invited to testify before you on the efforts which the Bernalillo County Commission and I have made to uphold our oath to support the Constitution of the United States, the Constitution and laws of the State of New Mexico, and faithfully and impartially discharge the duties of our office to the best of our ability.

Your letter stated that you wished to hear from witnesses who have successfully downsized or restructured their organizations. Our story has a different but highly relevant twist to what is normally brought before you.

In the April 1995 issue of "Governing," an article by Alan Ehrenhalt told us about two governments in the same locality—Phoenix, which in the fall of 1993, received the Bertelsmann competition as one of the two best governed cities in the world; and Maricopa County, which he describes as one of the worst run governments. The relevancy this has to your hearing is that we, the elected officials, do not have the luxury of fine-tuning a well-run government. Some of us have to correct existing deficiencies before we can follow through with downsizing.

As an example, I would like to cite that Bernalillo County had 42 audit findings in its 1993 fiscal year audit. Fifteen of these were prior year repeated and 37 were current year findings. Four of these were either material non-compliance or material weaknesses in internal controls. By fiscal year 1994, there were only 18 findings and no material non-compliance or material weaknesses in internal controls. By fiscal year 1995, our audit was so substantially improved it was submitted to the Government Finance Officers Association for Comprehensive Annual Financial Report certification.

Our oath requires us to address those issues which affect how we handle the public's funds. We have been entrusted to apply prudent principles to setting our revenue and expenditure projections. It is also our responsibility to ensure the public that the services they approve through bond issues on the ballot or by presentations before their elected representatives are delivered in an efficient and responsible manner. To this end, we as county commissioners have adopted budgets in the last 4 years which have not increased taxes. During this same time, the services to the community have increased by $12.5 million. These new services were programs which the voters selected in bond projects or where the legislature appropriated the capital expense and we picked up the operating and maintenance expenses.

In 1994, Bernalillo County increased its bond rating to AA1 with Moody's while retaining a AA rating with Standard & Poor's. The new rating is equivalent to the State of New Mexico's rating. This

fine rating allowed the county to issue its 1995 bonds at an effective interest rate of 4.9897 percent.

Other examples of restructuring the governance of the county are bringing all the parties to the table to discuss and resolve issues. The concept is called partnering. Partnering is a process of involving all of the stakeholders in a project, those being the providers of service and the recipients of service in a process of working together to achieve mutual goals and objectives. Partnering results in a charter between stakeholders, establishing working relationships among the parties through mutually developed formal strategy of commitment and communication. The partnering goal is to create an environment where trust and teamwork prevent disputes, foster a cooperative bond to the mutual benefit of all stakeholders, and facilitate the completion of a successful project. Partnering produces better projects on time within budget and to the recipients' satisfaction.

An example of a Bernalillo County project which utilized the partnering concept is the interchange of one of our roadways at Paseo del Norte and Second Street. Given the large scope of that project, it has experienced minimal disputes, is ahead of schedule and is widely recognized as an excellent project serving the ultimate stakeholder, the public.

Partnering has been traditionally utilized in the construction phase. However, Bernalillo County initiated a partnering program for the Southeast Corridor Planning Study, another transportation issue. The partners include the Department of Energy, the Department of Defense, the Department of Transportation, the Air Force and Sandia National Laboratories, among others. While the end results of this program have not been realized to date, it has resulted in some very productive dialog.

There is also the reality that sometimes multiple agency and different levels of government create bureaucratic knotholes which we force the consumer to untangle. In an attempt to reduce bureaucracy, we are expanding our code enforcement staff to handle permitting and inspections which are currently handled by the State. Our efforts are being focused on providing the customer with one-stop shop capabilities, as Mr. Rael mentioned, the county is also doing this. And this eliminates the levels of bureaucracy, we believe. The goal is to become more efficient and to provide the public with quality service in a timely manner.

Having achieved these accomplishments allows us to set a goal of being one of the best run governments in the world. Our internal operations are in a mode to accept this challenge. However, if we had ignored the warning signs, we would still be facing the potential of corruption and fraud.

My grandfather use to say to me, "Watch your pennies and the dollars will take care of themselves." As simplistic as this observation is, I truly believe that attention to detail is vital to good governance. More with less is the phrase of the day. Every level of government can provide better service with fewer resources.

We must trust the wisdom of our constituents; and we must provide open, honest leadership. As elected officials, it is our solemn duty to listen. We must not govern in a vacuum. As we govern openly, listen carefully and apply good common sense to our deci-

sionmaking process, Bernalillo County will continue to climb toward our goal of being one of the best run governments in the world—a government for the 21st century.

Thank you.

[The prepared statement of Ms. Seward follows:]

Barbara J. Seward
Bernalillo County Commissioner
Testimony before the Congressional Committee on Government Reform and Oversight

Mr. Chairman, (William F. Clinger, Jr.) and members of the House Committee on Government Reform and Oversight, I am delighted to have been invited to testify before the Full Committee on the efforts which the Bernalillo County Commission and I have made to uphold our oath to "support the Consitution of the United States, the Constitution and laws of the State of New Mexico and faithfully and impartially discharge the duties of our office to the best of our ability." Your letter stated that you wished to hear from, "...witnesses who have successfully downsized or restructured their organizations...". Our story has a different but highly relevant twist to what is normally brought before you.

In the April 1995 issue of "Governing" an article by Alan Ehrenhalt told us about two governments in the same locality; Phoenix, which in the fall of 1993 received the Bertelsmann competition as one of the two best governed cities in the world and Maricopa County which he describes as one of the worst run governments. The relevancy this has to your hearing is that we, the elected representatives, do not always have the luxury of fine tuning a well run government. Some of us have to correct existing deficiencies before we can follow through with "downsizing".

As an example I would like to cite that Bernalillo County had 42 audit findings in its 1993 fiscal year audit. Fifteen of these were prior year repeated and 37 were current year findings. Four of these were either material noncompliance or material weaknesses in internal controls. By FY 1994 there were only 18 findings and no material noncompliance or material weaknesses in internal controls. By FY 1995 our audit was substantially improved and was submitted to the Government Finance Officers Association (GFOA) for Comprehensive Annual Financial Report (CAFR) certification.

Our oath requires us to address those issues which affect how we handle the public's funds. We have been entrusted to apply prudent principles to setting our revenue and expenditure projections. It is also our responsibility to ensure the public that the services they approved through bond issues on the ballot, or by presentations before their elected representatives, are delivered in an efficient and responsible manner. To this end we as County Commissioners have adopted budgets in the last four years which have not increased taxes.

During this same time the services to the community have increased by $12.5 million dollars. These new services were programs which the voters selected in bond projects or where the legislature appropriated the capital expense and we picked up the operating and maintenance expenses. In 1994 Bernalillo County increased its bond rating to AA1 with Moody's while retaining a AA rating with Standard and Poor's. The new rating is equivalent to the State of New Mexico's rating and higher than the rating of the City of Albuquerque. This fine rating allowed the County to issue its 1995 bonds at an effective interest rate of 4.9897 percent.

Other examples of restructuring the governance of the County are bringing all the parties to the table to discuss and resolve issues. The concept is called "partnering". Partnering is a process of involving all of the stakeholders in a project (providers of service and recipients of service) in a process of working together to achieve mutual goals and objectives. Partnering results in a charter between stakeholders establishing working relationships among the parties through mutually-developed, formal strategy of commitment and communication. The partnering goal is to create an environment, where trust and teamwork prevent disputes, foster a cooperative bond to the mutual benefit of all stakeholders and facilitate the completion of a successful project. Partnering produces better projects- on time, within budget, and to the recipients satisfaction.

An example of a Bernalillo County Project which utilized the partnering concept is the interchange at Paseo del Norte and Second Street. Given the large scope of that project it has experienced minimal disputes, is ahead of schedule and is widely recognized as an excellent project serving the ultimate stakeholder- THE PUBLIC.

Partnering has been traditionally utilized in the construction phase, however Bernalillo County initiated a partnering program for the Southeast Corridor Planning Study. The partners include the Department of Energy, the Department of Defense, the Department of Transportation, the Air Force and Sandia National Laboratories, among others. While the end results of this program have not been realized to date, it has resulted in some very productive dialogue.

There is also the reality that sometimes multiple agency and different levels of government create bureaucratic knotholes which we force the consumer to untangle. In an attempt to reduce bureaucracy we are expanding our code enforcement staff to handle electrical, plumbing and mechanical permitting, as well as inspections, all of which are currently handled by the State. Our efforts are being focused on providing the customer with "one-stop-shop" capabilities, thus eliminating the levels of bureaucracy. The goal is to become more efficient and to provide the public with quality service in a timely manner.

Having achieved these accomplishments allows us to set a goal of being one of the best run governments in the world. Our internal operations are in a mode to accept this challenge. However if we had ignored the warning signs we would still be facing the potential of corruption and fraud.

My Grandfather used to say to me, "Watch your pennies and your dollars will take care of themselves." As symplistic as this observation is, I truly believe that attention to detail is vital to good governance. "More with less" is the phrase of the day. Every level of government can provide better service with fewer resources.

We must trust the wisdom of our constituants; and we must provide open, honest leadership. As elected officials, it is our solemn duty to listen; we must not govern in a vacuum. As we govern openly, listen carefully and apply good common sense to our decision making process, Bernalillo County will continue to climb towards our goal of being one of the best run governments in the world.

Mr. CLINGER. Thank you very much, Commissioner Seward, for very excellent testimony.

I recognize the gentleman from New Mexico for 5 minutes.

Mr. SCHIFF. Thank you, Mr. Chairman.

Mr. Rael, what I would like to ask first is, I know that the administration of the city has worked on a number of issues such as controlling some of the air pollution problems that we have had. I congratulate you again for having kept us off the EPA hit list now for several years running. But that requires a lot of regional cooperation because smoke blows with the air currents. And I am wondering if you could briefly state, on issues like that or other issues that require a regional cooperation, the city's point of view on how well that is or is not occurring in this area.

Mr. RAEL. Mr. Chairman, Representative Schiff, we currently have, as you know, the Air Quality Board which is a board that is comprised of city membership and county, Bernalillo County membership. Current State law does not permit the expansion of that board unless we go to the legislature to have that changed to incorporate a bigger base if you will, a bigger area of the region.

What we are attempting to do is to work with different jurisdiction such as the city of Rio Rancho and different other jurisdictions, to establish joint powers agreements with them by which they would abide with the regulations that are currently in place in Bernalillo County, and to pass resolutions to their municipal governments to permit or to enforce some of those issues like the oxygenated fuels programs and those type of programs.

On a regional level, however, I do not believe that this region has done very well in terms of beginning to look at issues such as transit systems and transportation programs on a regional basis. We have the Urban Transportation Planning and Policy Board, which is structured to begin to look at those and they have done some master plans and some long-range planning, but unfortunately, that vehicle does not have enough of a regulatory process, or if you will, enough of a management process to be able to effectuate change on a regional basis in a very strong manner. It is still left up to the individual jurisdictions.

Mr. SCHIFF. These authorities, if they are going to come about, would have to come from the State legislature, would they not?

Mr. RAEL. Mr. Chairman, Congressman Schiff, the State legislature would have to pass enabling legislation to permit those to exist.

Mr. SCHIFF. Thank you.

Speaking of transportation, Commissioner Seward, of course with your work on the Urban Transportation Policy Board, this is where you and I have met most and the issue we have most discussed. Could you briefly state in this area, geographically, as you see it, what is the biggest transportation, or what are the biggest transportation problems you see right now?

Ms. SEWARD. Congressman Schiff, as I see it, it is the fact that New Mexico is a very large State geographically, and a very small State population-wise. Consequently, we do not generate the amount of funds that is necessary to take care of our infrastructure, both in maintaining it and providing new roadways.

Mr. SCHIFF. A lot of roads but not a lot of people.

Ms. SEWARD. That is it exactly. And this urban area has, I believe it is 40 percent of the total miles traveled in the State; however, the Federal funds are not allocated that way. We certainly do not get 40 percent of the Federal funds coming down. So we are left with critical transportation issues and needs in this area.

I would like to follow up on something that Mr. Rael also said, we have—the Urban Transportation Planning Policy Board is a subcommittee of the Middle Rio Grande Council of Governments. The Middle Rio Grande Council of Governments has begun very serious dialog on regional issues, and of course our transportation plans directly involve our air quality and we have significant water issues, as you know. We do not have statutory authority, the COG, but at least the dialog has begun and everyone is very aware that this regional cooperation absolutely must happen.

Mr. SCHIFF. Thank you, Mr. Chairman.

Mr. CLINGER. Thank you very much.

Obviously one of the objectives of this committee is to determine the extent to which we can in fact take those responsibilities which have been sort of aggrandized to the Federal level, and return them to States and ultimately to local governments, in an effort to redefine the whole Federal/State/local relationship, which has seemed to many of us to be more of a sort of guardian/ward relationship than a true partnership as intended by the founding fathers. Each government has a unique and specific role to play and that they should only do those things which are within their competence to perform. And as has been indicated throughout this hearing, we have had more and more of an assumption of those responsibilities at the Federal level.

But the debate really centers on to what extent—and I am now reflecting those that have some reservations or skepticisms about attempting to redefine this relationship—the debate centers on to what extent can we trust State and local governments to do what we have determined is best at the Federal level, that only the Federal Government can really determine national standards for clean air, for clean water, for safety in certain areas, for transportation and a whole range of issues which the Federal Government has very, very specific—not only specific standards, but also specific ways to achieve those standards.

I guess my question is, how can we be assured that we can trust you, or is there a need to retain some measure of control at the Federal level, as we devolve back? For example, we are talking about going to block grants in many areas for many purposes, which would have fewer strings attached than under present categorical grant programs.

Just give me your thoughts on that. I mean, my own sense is that you are not going to despoil your atmosphere because you are living in it, so that it would be unlikely that you would be less interested in clean air or clean water than somebody in Washington would be, but I may be biased. So I would be interested to hear your views.

Mr. RAEL. Mr. Chairman, first let me say that I think some of the roles that Congressman Schiff indicated earlier about the Federal Government's responsibility at the national level are certain there and I think should continue. My concern particularly with

some of the regulations is the regulatory process that occurs outside the legislative process, again as Secretary Wilson indicated. Some of those regulations are very onerous and sometimes go I think beyond what the legislation's intent was originally.

Additionally, again, clean water, for example, is one issue that we have had to struggle with. We have just had to augment our wastewater treatment plant to the tune of $75 million to comply with the Clean Water Standards Act in which we were to bring the water that we discharge into the Rio Grande River up to water drinking standards. If you go anywhere above the river, you will find that the water is not at drinking standards by its natural occurrence, by what is already in the ground as it flows through the State. That aside, that was $75 million that our citizens at the local level had to ante up through a water rate increase. I believe that at the local level, you have people who are going to be responsible and are going to be much more directed toward their citizens because they live there. These are the people that will see the response. I can assure you the decision I make today on an issue, that I will hear about it by 3 this afternoon because it affects the community that quickly and that directly.

So to indicate that some of those block grants coming to municipal governments or to county governments are such that we know the people, we know the programs and again, the issue is flexibility. There are some programs that are so structured and so rigid that it is difficult to really provide the service that was probably the intent of the original legislation, but because of the regulatory processes, et cetera that are required, you cannot serve the people that you want to serve.

And we have lots of those issues that happen on a case-by-case, program-by-program that the local government and the local officials would be much better able to assess what their needs are and be able to use those funds in a more productive manner.

That is my sense and that is why I believe the local level is where a lot of these programs should be administered.

If I may just add one little caveat. One caveat that I would say is again, as the State of New Mexico, we are a very rural State, this is the biggest city in the State. And the issues with the distribution of resources are extremely important. And one that concerns me a great deal about the block grant perspective is the idea that the States will then divide the money up amongst the jurisdictions. I will tell you that as the biggest city in the State of New Mexico, that puts us at somewhat of a disadvantage because there are many other communities in the State that have equal needs that are of great concern to those city councils and those managers. And those are the concerns that with block grants that concern many big cities across this county, how are those funds going to be divvied up at the State level. It is something that needs to be addressed.

Traditionally, the Federal Government has always had a good relationship with cities because of their size in terms of direct funding to those cities. And I would encourage you to continue to look at those relationships.

Mr. CLINGER. Thank you. I think I always feel that to the greatest extent possible, those block grants ought to be directly to the

cities, to eliminate the administrative overhead that might be incurred at the State level.

Commissioner Seward.

Ms. SEWARD. And I presume and to the counties.

Mr. CLINGER. And to the counties, that is right—yes, to local and to local.

Ms. SEWARD. I think flexibility is the key here. Can we, the local governments administer? Most assuredly we can. Local government is very hands-on. We know our constituents personally and they certainly know us and they certainly know how to get on the telephone and tell us what they approve of and what they disapprove of.

I think we are immediately responsive to them—we must be. Because we are their elected official. To follow up on a comment or two of Mr. Rael's, the inflexibility of the bureaucracy is very difficult for us to deal with because one size does not fit all.

We have an issue here of the Rio Grande silvery minnow, which is working its way through the bureaucracy to be indicated as an endangered species. We have been told if this happens, that we will have to maintain a certain flow within the Rio Grande River. And that means cutting off some of the irrigation possibilities for our farmers downstream. This makes absolutely no sense to anyone here locally, and it is those sorts of regulations that we are very hopeful that we can get away from.

Mr. CLINGER. Thank you. My time has now expired and I would recognize the gentleman from California, Mr. Horn for 5 minutes.

Mr. HORN. Thank you very much, Mr. Chairman.

Both of you have mentioned there are certain Federal programs that are very annoying because they do not allow local flexibility to meet local needs. Could you just give me the top four or five, Mr. Rael, that bother you the most?

Mr. RAEL. Mr. Chairman, Housing and Urban Development programs for public housing are extremely onerous.

Mr. HORN. Is that Section 8 in particular?

Mr. RAEL. Section 8 programs are difficult to some degree. There are some needs to keep some regulations in place, but there are certainly a lot of ways to streamline that.

EPA programs regarding clean air and clean water and those issues. The kind of regulations that are being established, it is our analysis that they are more prudent for other parts of the country and other areas where there are different environmental issues that need to be reviewed.

Other areas that we look at are the Federal Transit Administration in terms of regulations that are placed on funding for transit systems and the kinds of programs and requirements that are required with that.

Some of the legislation that happens in social programs such as we have a substance abuse grant that the city administers and we have a child development program that the city administers. The kind of oversight and monitoring responsibilities that are required, requires a great deal of overhead, if you will; off the top staffing costs that reduce the amount of money available to actually provide the services.

There is one particular little piece of legislation that—and it is not even a piece of legislation actually, it is a regulation—the Fair Labor Standards Act. The Fair Labor Standards Act was developed to apply to the private sector. Somewhere in the infinite wisdom of people in Washington, that is now being applied to the public sector. To spare the details, as an administrator at the local level, I have to comply with that standard. If I have a management employee that is, for some reason, being reprimanded, I must give him 5 days minimum time off. If I do anything less than that, then I have to take him off the exempt status position and put him back in an hourly wage rate. It is unworkable, it is just very bureaucratic.

Mr. HORN. If I can interrupt you, Congress has just seen fit to apply the Fair Labor Standards Act to itself. And maybe in having to comply with the rules they have imposed on everyone else, it will bring out some needs for change that the Congress has never seen up close and personally. It is not a call for repeal of the Fair Labor Standards Act by any stretch of the imagination, it is merely an observation that if you have to live it, have to walk in those moccasins, if you will, that maybe the need for reform where it is indicated, become more of a pressing issue in Congress.

Mr. RAEL. Mr. Chairman, Congressman, it is not the repeal that I advocated, it is simply looking at the regulatory processes that have been established by the Department of Labor and how it has been applied to the public sector that has really become very onerous to us at the local level.

Mr. HORN. That is very interesting. If you would like to elaborate on that—maybe this is a sufficient record for us to follow up, but those are the kinds of things we appreciate learning, so we can try to do something about it.

Commissioner Seward, you heard Mr. Rael's list. Is yours the same, or what Federal programs would you put in high priority that really need changing if they are to be properly administered locally?

Ms. SEWARD. Because we are of the same urban area, the same concerns exist for Bernalillo County. I would put a slightly rural twist to it and say the EPA regulations and most specifically land use regulations and endangered species regulations are of great concern to the rural area.

Mr. HORN. I did not hear either one of you mention OSHA, the Occupational Safety and Health. Has that been a problem?

Mr. RAEL. Mr. Chairman, Representative, OSHA has not been as big a problem for us in our programs. As a matter of fact, I will tell you quite candidly that in some areas, they have actually helped us review our safety issues and our safety programs, they have helped us develop better ways of providing services. So in terms probably more in our contracting area and in terms of the costs associated with contracting services, because as a local government, we contract with the private sector for all our road construction and all our infrastructure rehab and repair. I know that the requirements from OSHA are extremely onerous to the point that it increases the cost of those contracts to do those services.

Mr. HORN. Would you agree with that, Ms. Seward?

Ms. SEWARD. I would. I think OSHA has helped the public sector identify safety issues, but probably has regulations which have tremendously impacted private industry.

Mr. HORN. Let me ask you, Commissioner Seward, what Federal programs does the county administer that come under a sort of automatic grant based on either degree of poverty, population, whatever, and what do you administer based on categorical grants where you apply specifically to get the funds? Do you have a feel for that?

Ms. SEWARD. As Secretary Wilson testified, much of the Federal money is handled at the State level in New Mexico. Counties have very few discretionary funds. We are mainly mandated by the State government about how our funds and where our funds will be spent. We do, of course, receive HUD funds, we have a separate HUD program from the city's.

Mr. HORN. That is obviously one of the things that concerns us, is when you at the city level in particular, and the county partially, get the brunt of the Federal mandates on the State and the State mandates on local government, without ever putting up the money on the part of either. To what degree does the State of New Mexico, when they give you a mandate, to what degree do they fund it?

Mr. SCHIFF. I have to ask for kind of a quick answer at this point, so we can move on to Mr. Shadegg for questions.

Ms. SEWARD. Surely. There was legislation a number of years ago that requires the State to fund mandated programs. That has not happened.

Mr. HORN. In other words, the State legislature and Governor ignored the laws of the State of New Mexico?

Ms. SEWARD. On occasion. Not willfully, I am sure. [Laughter.]

Mr. HORN. Well, we have the same thing in California, so I am quite familiar with it, as a former State executive.

Ms. SEWARD. It is things like the legislature will appropriate funds for let us take for example a library or a community center and they expect the county or the city or whomever to build it, but they do not tell us how we are going to staff it. We have this occurrence all the time.

Mr. HORN. Thank you very much.

Mr. SCHIFF. Thank you, Mr. Horn. Mr. Shadegg, you are recognized for 5 minutes.

Mr. SHADEGG. Thank you, Mr. Chairman.

I want to compliment you both, I think you have both brought very, very thoughtful testimony here, which has, at least for me, been of significant value.

Having been born and raised in Phoenix and Phoenix being located in Maricopa County, I would say, Ms. Seward, that the comments in the article are exactly right. Phoenix was doing a wonderful job of structuring itself as a good city while the county was going in the opposite direction. And the observation made in the article in "Governing" was quite accurate.

I never knew my grandfather, both of my grandfathers died before I was born, but I wish one of them had said "Watch your pennies and the dollars will take care of themselves," I think that point is well made, and it looks to me like you are doing a good job of that here.

Mr. Rael, I listened carefully to your testimony and I want to ask you to give me some advice. There were two programs—first let me say, I think the FLSA simply does not work, it does not work for government, it does not work for private industry. I spent 8 years in the Arizona Attorney General's Office and if you want to see a mess, try applying the Fair Labor Standards Act to police officers who at times have to sit on stakeout for 12 hours straight, and then you have to try to work with it. Try applying it to discipline of police officers and investigators who desperately want to work but the law will not allow you to let them work. They are in a case because their heart is in the case and you have to tell them sorry, go home. It does not work. So it needs to be fixed and I think Congressman Schiff is right, now that we have to live under it, we will perhaps reform it and make it a more workable law.

You mentioned two programs, a substance abuse grant and another one. What was the second program that——

Mr. RAEL. Comprehensive Child Development Program.

Mr. SHADEGG. Right. In your earlier remarks, in talking about the "Seven Habits of Highly Effective People," you talked about the consequences of change and you talked to us a little bit about thinking—planning and thinking through the impacts of whatever we do and particularly the impacts on poor people and people who are disadvantaged in our community. And yet at the same time, you mentioned two well-intended Federal programs that, I think because they are Federal programs and administered from thousands of miles away, are not being near as efficient as they might be. Indeed there are lots of moneys that are being wasted.

My biggest battle in the 104th Congress is trying to move my peers. I want to move them toward a much more radical, much more rapid devolution of power and authority away from the Federal Government and toward the localities, and I want them to overcome their fears of doing that, and to see that in fact we can trust State and local government and indeed individuals themselves, to run their own lives and perhaps do better.

But what we get thrown back in our face is well, but will people not suffer, will not those very poor people about which you are concerned, or kids in the substance abuse program suffer. And I guess the question I would put to you is first of all, do you think we should move that authority back to the State and localities and get it out of the Federal Government, and that it would be better. And if you do, what arguments, were you in my shoes, would you make to your peers to inure them to trust that we can do this without hurting people?

Mr. RAEL. Congressman, let me indicate to you a couple of things. My philosophy in government has been that you pick the low-hanging fruit and you make a success and you move a little bit at the time, because I think there is no question to any of us that we are in this mess because we have all abdicated our responsibilities to some degree as citizens and as elected officials, et cetera, and that we are in a situation that needs to be changed and that we cannot just jump from point A to point Z in one giant leap.

My concern, particularly with those two programs, has been the issue of the monitoring processes that are required regulatorily. We are required to monitor the day-to-day activities of those programs

on a constant basis and report to the Federal Government. I have been asked to send staffers to Dallas for a training program on how to monitor the program. It is these kind of regulatory processes that take away from the core moneys that are available to provide resources because we are having to comply with someone's standards or someone's idea of "we cannot trust the guys at the local level because something is going to happen or they are going to use the money in the wrong manner," et cetera.

You know, there is no question, none of us is spared from fraud and abuse. It happens at the State level, it happens at the local level, it happens at the Federal level. And there is a constant need to continue to monitor and watch those things. But to the degree that we take part of the money away from what we intended it to be in the first place, to satisfy our own concerns about not trusting an organization that we have established as citizens of this country, to me is a real issue. I think that the regulatory processes in these programs need to be reviewed and need to be more flexible so that local governments can tailor the programs to the local needs.

I do not necessarily agree that all the block grant programs need to be—those programs need to be offered in block grants to the State government in one fell swoop. I think it needs to be done in a systematic way, I think it needs to be done in a piecemeal way so that everyone feels the comfort level from the Congressmen in Washington folks to the State folks, to the local folks, because I will tell you that fraud and abuse will happen and it will happen at any level if there is not enough oversight to make sure that it does not happen, in a strategic and planned way.

Mr. SHADEGG. Does that not suggest that if you believe those programs are best administered locally, we should not be doing it by block grant at all, we ought to be getting the Federal Government out of those activities and getting rid of the resources and letting the States and cities raise those resources and administer the programs. Because what you are really saying is the accountability follows the money, and as long as the money comes to the Federal Government and then they dish it back, they are going to say well now, we have got to hold you accountable because we are responsible for that money. And if we really believe that people can run their own lives and that local governments can be trusted, should we not just leave those functions and the money that funds them with the localities?

Mr. RAEL. Mr. Chairman, Congressman, that is indeed what I am saying, I think local governments can do that. But what I am saying to you is that if the red tape and the bureaucracy and the requirements that are going to be in place at the same time you bring them down to the local level, then you are going to get what you get now. You are going to be bureaucrats working on monitoring and self-promotion of their positions and their jobs for the programs and you are not going to get the programs delivered as you intended in the first place.

And that is why I said do it piecemeal to make sure that the programs are structured properly locally so that you have that safeguard that that is not going to occur, because the bureaucracy will build itself.

Mr. SHADEGG. I believe in Edmond Burke's admonition of gradualism, but I do not believe that the long-term structure that works is for us to keep the money in Washington and keep letting—just give the money back—I mean get the money in Washington and then give it back. I think we ought to redefine the role of Federal Government and get it out of those things that it should not be doing and let the locality here decide what their substance abuse program ought to look like and get the Federal Government out of the business of taking that money to Washington in the first place and let you raise the taxes to fund a substance abuse program that you define for your children here.

Thank you, Mr. Chairman.

Mr. SCHIFF. The gentleman's time has expired. I want to thank both you, Mr. Rael and Ms. Seward, very much for your testimony. It was very valuable in terms of trying to reach the goal which we are trying to reach in getting educated about the Federal Government and what we can do better. We appreciate your contributions.

Before calling the third panel, I am going to take a second and confer with the reporter for a second. [Brief pause.]

I would like to call up now our third panel. We have three individuals. They are Dr. George W. Rhodes, who is vice president and technical director of Quatro Corp. Dr. Rhodes is a former official with BDM, he has been a guest scientist at Los Alamos Laboratories for many years and he and a group formed a small, which is getting larger, but small business based upon high tech industry, which we would like to see a lot more of in New Mexico.

The next is Mary Molina Mescall. Ms. Mescall is former chair for many years of the Hispanic Roundtable and is active more currently in a number of other community organizations.

And I did not see Mr. Strunk, I apologize—in the back, all right, that is why I did not. Mr. Steve Strunk is the chief administrative officer of Boatmen's Sunwest, Inc.

Two administrative things before I invite you to give your testimony. The first is we are, among other things, the investigative committee of Congress, taking testimony when sometimes the veracity of testimony in some places is under some question. So as not to prejudice any witness as to who is being sworn in and who is not being sworn, we swear in every witness. So if I could ask you to rise and raise your right hand with me for a moment.

[Witnesses sworn.]

Mr. SCHIFF. And second, I just want to say again—I said this earlier, but for those that just joined us, you have seen members of the committee come and go a little bit. There are some other matters that have to be taken care of, keeping track in Washington, some media questions and they have to go about their business and their deadlines. And I want to stress the one person who is permanent here is the court reporter and therefore, the record goes on. And the point is that everything said here will be a part of the record and that is the most significant point of the hearing. It will be distributed to all Members of Congress in due course.

Dr. Rhodes, you are welcome to proceed.

STATEMENTS OF GEORGE W. RHODES, VICE PRESIDENT AND TECHNICAL DIRECTOR, QUATRO CORP.; MARY MOLINA MESCALL, HISPANIC ROUNDTABLE; AND STEVE STRUNK, CHIEF ADMINISTRATIVE OFFICER, BOATMEN'S SUNWEST, INC.

Mr. RHODES. Thank you, sir.

Good morning, Mr. Chairman and members of the committee. I am George Rhodes, vice president and technical director of Quatro Corp. Sorry for the voice. It is as good as it is going to work today. I am pleased to have been given the opportunity to present my views on how to restructure the Federal Government. I have served in the U.S. military, the Atomic Energy Commission, big business and now small business. I think I bring a bit different perspective perhaps than some of my colleagues. And I submit the factors that have allowed these entities to either succeed or fail are all uncommon, which brings me to your visit.

Your presence here signals your concern that the Federal bureaucracy is too large and inefficient. I completely agree. It represents a jobs program rather than a business model. Many agencies and their functions are inappropriate, unaffordable and unnecessary. The majority of civil service employees are conscientious and would favor reform since they are frustrated with their own system. However, since the civil service regulations guide its composition, and make it difficult to fire poor performers simple restructuring is rendered difficult, if not impossible. Even so, Congress now has the unique opportunity to change the course and the function of Federal service, but bold actions will have to be taken, with care in preserving the necessary parts.

Many of the Federal agencies were born lean. An example was the Atomic Energy Commission, which I joined in 1974. Although it grew at a moderate rate from its inception, until the creation of ERDA in 1975, it was a model of excellence in government management. The AEC had almost all of the functions of ERDA, somehow a doubling of the staff was justified as it was raised in stature to an administration. Thirty-two months later the bureaucratic virus struck. It changed its name to the Department of Energy and the staff was again doubled, even though the function remained essentially the same. This pattern of explosive growth with no increase in function has been replicated several times as new departments have been created. This has become the model for poor government management.

The Federal programs are rife with replication in addition to questionable missions. Separate military services are a monument to a rich nation which can afford parallel approaches to ensure that no operation will be weak. Is this strategy one that our country can continue to embrace? Why are organizations like the CIA, NRO, DMA and NSA separate with their own budgets? Those happen to all be in common and I am sure you are well familiar with all of them. What mission does DNA serve that could not be performed with a tenth the staff in a small Pentagon office? The three national nuclear weapons laboratories are defended for several reasons, but the President's recent decision shows that he sees them as another employment program. I know that is almost heresy in our neighborhood but that is the way many of us see it. Since the

inception of most cabinet level departments, our culture has undergone significant changes but the departments still exist with the same missions. Just as business must change with the times, so must the government.

Another matter that deserves serious attention is the civil service retirement system. Personnel can retire from the Federal employment with periods of service far less than the private sector. In addition, Federal employees should be mandated to join the FICA system. It is preposterous that they are allowed to have a separate system from other citizens. Both extending the retirement age to 62 and dismantling the unneeded departments will have an enormous financial impact. The former is beyond the scope of government reorganization, so I will return to the primary purpose of this address.

The Federal Government must be responsible for the national defense, foreign affairs, interstate commerce, justice, taxation and care of the common lands. Beyond those functions, one is hard pressed to justify a significant presence. This is not meant to suggest that the individual States should not retain the responsibility for the care of their citizens. Whereas the concept of block grants is an improvement on today's approach, why should Washington collect moneys earmarked for the States from which they came? The government must become oriented to the bottom line.

I am going to recommend an approach to restructuring. When a business is in financial trouble, the shareholders and board of directors usually demand drastic action. A review of all functions and personnel is ordered. Unnecessary functions are reduced or aggregated, budgets are slashed and facilities are closed. If the Federal system were analyzed as a service business, numerous solutions to downsizing would become obvious.

The BRAC Commission approach used to reduce the size of the Department of Defense, would seem to serve as a model. Although they were presented with imperfect and biased data from the services, on balance they made reasonable recommendations. A like structure could be formed to perform all operations audit—sorry, an operations audit on all Federal agencies. I am suggesting that a Department Realignment and Closure Commission be formed, DRAC. The DRAC model would succeed because it is empowered for a finite period, with no political baggage. Operating under the authority of the Congress, it could analyze every facet of a government department. After its recommendations are presented, the DRAC is disbanded. The DRAC could prioritize the recommendations into two categories. Priority one should list the least useful agencies with the rationale for their termination. Priority two should include the agencies performing critical functions with recommendations for more efficient structure. The authority establishing the DRAC should be configured in a manner that Congress can only agree or disagree with the full package of recommendations for their two aggregated groups rather than being able to modify the results for the benefits of their constituencies.

The data gathering portion of the structure is already in place and reports to the Congress. They are called the GAO. They should be charged with examining the form and function of every department within an agency. The GAO data would be presented to the

DRAC. Their recommendation should include sizing, functions and reporting lines. Care should be given to facilities' operational costs and pension plans.

Since the product of the restructuring will be fewer agencies, care must be given to not repeating some mistakes of the past. No new agencies should be created without including a "Sundown" provision. Their charter and staffing must be reviewed within 5 years to ensure that the original vision has not been diverted. This requirement will serve two functions. First, it must be established that the need for the initial structure remains in tact, and second will be the performance review of its employees. In business, no person is guaranteed lifetime employment separated from performance. Public service should be held at to the some standard. It is difficult to fire a poor employee in private business; however, it is almost impossible in the civil service system. Our country was built on several work ethic principles, one of the most important being: mediocrity falls aside while exemplary succeeds.

Some of the downsizing action should be taken in steps. If a 20 percent year reduction were implemented for 5 years, the impact would be more manageable than if it were to happen at one time. As the reduction in force takes place, the enabling laws should disallow bumping rights. This will preclude the mediocre from being retained. These reductions will fuel unemployment unless the slack is taken up by private business. A business economy not choking on taxes will be able to assimilate the additional staffs into productive functions. The cuts in expenses will result in lesser requirement for taxes.

You have been elected as the national board of directors by the shareholders. Last November the American people told you that serious and extreme action was demanded. While it will be painful for the board to support radical surgery, the bottom line demands it for the long-term health of the Nation. This Congress has made progress through bold actions. I would ask that you exhibit the same commitment when attacking this problem. If you succeed, the Nation will be grateful.

Thank you for the opportunity to present my views.

Mr. CLINGER. Thank you very much, Mr. Rhodes. I appreciate your testimony very much.

Ms. Mescall.

Ms. MESCALL. Mr. Chairman, Congressman Schiff, Mr. Shadegg, my testimony this morning is going the be very different from everybody else's. I am going to assume that the reason for my invitation is my community advocacy in this community and it has been Statewide for at least 15 years. My advocacy includes women and children and economic empowerment for the disadvantaged. So, I welcome the opportunity. Again, it is going to be different from anything we have heard this morning, but I would be remiss—and this is very important for me to state—in not speaking on behalf of some of those folks who are not here to testify or who do not get asked to testify.

I was asked to participate on Thursday. So, I have got—when they said 5 minutes, I literally tried to stay with 5 minutes and I have my handwritten notes here. If you will bear with me, I am going to read these.

As New Mexico deals with the shortfall in State revenues—and we have all been reading about that here in New Mexico—and the Federal Government contemplates reform, we in New Mexico have to examine the impact on our State. Because of my activities in advocacy involving women and childrens' issues and economic well being, especially for the disenfranchised, I appreciate this opportunity to be a part of this process.

My concerns lie with how the inevitable changes and/or reform, if you will, will impact this State. I feel that we are at a tremendous risk right now. For every dollar in New Mexico, we get $2.17 in Federal funds. The next closest State is Mississippi. New Mexico, it has been estimated, could as a part of the Contract With America be cut Federal money to programs by $524 million a year. And for the observation that in New Mexico human services spending has been growing out of control for the last several years, that growth is due to population increases and often times we find ourselves playing catch-up in addressing basic needs of the poor. Most Americans do not want to see people suffer, especially the children just because they are poor. A recent Albuquerque Journal poll showed approval of the job Congress is doing. I think everyone welcomes some kind of change. But a substantial majority, 61 percent, said Congress is trying to cut back too much in Federal health and social spending.

On the issue of welfare. Welfare reform is necessary. I think there is no debate about that. But certain poor children and certain adults who desperately need help are going to suffer. A success in this however is a proposed $8 billion in childcare funding over 5 years so that women can work and leave welfare rolls. The bill places a 5-year limit on cash welfare to families. Individual States cannot for fewer than 5 years. The Senate allows for up to 20 percent of cases to be exempted from 5 years due to hardship. While exemptions are a good idea, they might not provide enough flexibility to States in times of economic recession such as the one we are experiencing now. The poor would be vulnerable to those State government administrations that would not consider the word we have been hearing today, flexibility. Let me give you an example.

A recent decision in New Mexico to halt general assistance payments to the disabled who have been in the program for 12 months is an example of how government can be inflexible. As a result, 620 disabled citizens lost benefits from the 12-month limit. It went into effect this month. And another 111 disabled faced the loss of benefits pending an appeal. As a caring society, what do we say to these people who have no income and have no way to support themselves, they are disabled. And what do we say to these disabled individuals who have children? What happens to their children?

On the issue of Medicaid, a success, if you will. A bill by Congress that appropriates $3 million for a supplemental security income outreach program, the goal is to inform the elderly low income, the blind and disabled people about availability and method of applying for SSI money if their income falls below the poverty ceilings in their respective States. The explanation of a $3 trillion debt—we all know about that—and voter opposition to tax increases—we know about that—precludes meaningful discussions in my opinion for some solutions in the important areas of Medicaid.

We should be providing better education such as the SSI outreach program. Creative financial planning in developing a national healthcare system that can be shared by the Federal Government, that can be shared by the private sector and by recipients. It is at least a hopeful alternative.

When we hear and talk about an $18,000 tax break for individuals earning $200,000 plus, it gives the appearance—unless we are misunderstanding—unless I am misunderstanding, of insensitivity to those on Medicaid whose strict eligibility requirements is $388 earnings cutoff to qualify for Medicaid. You take that $388 and divide it by 30 days in a month and that is $12 to live on. That is to pay for gas and electricity, for water, for food, for rent, $12. That is $4,656 a year, a far cry from $200,000 plus annually.

On earned income tax credit, the EITC, a success in this area. The EITC is the only program designed exclusively to help poor people who choose work, who choose work over welfare. It is based on the idea that a family with a full-time steady worker should not live below the poverty line. The program matches each dollar earned with a refundable tax credit of up to 40 cents until income reaches a certain level. For example, a worker with two children who makes $8,425 a year can claim an EITC of $3,370. The credit shrinks as income rises, ending at $27,000. At $27,000, a family of four, I do not think can be placed in the category of the rich and famous. Again, a far cry from the $200,000 plus incomes. A House GOP bill would take $20 billion out of that EITC over 7 years and the Senate bill would cut it by $66 billion. What kind of message does this send to that working man or woman?

Finally and briefly, other successes—and I am going to refer to the 103d Congress. The 103d Congress passed more laws than ever helping women and I appreciate that. I work in the area of women and children. The Violence Against Women Act passed as part of the crime bill which provides $1.6 billion for rape crisis and women shelters and adds to personnel involved in rape and abuse cases.

Bankruptcy legislation—this is really outrageous. Bankruptcy legislation requires parents to continue paying child support even after declaring bankruptcy.

Other successes, the Headstart center—the Headstart Program. It originated—I have been with LULAC for 15 years. That originated with LULAC. It was called—years ago when it first started—the Little School of 400. It is a very successful program. We are experiencing some cuts.

I have a son—and if I could be personal here for just a moment. A son who is at the University of Notre Dame and a daughter who is at the University of Miami. I am very proud of that accomplishment. Each one of those institutions cost no less than $20,000 a year for their educations. My children are Hispanic. Actually, they are doubles, half Irish, half Hispanic. We have worked very hard to be high achievers. I have worked very hard with my children to make sure that they do all the right things in having those academic grades and background and values and all of the things that goes with it that we hope in terms of when we talk about family values and success to be able to be competitive. I am very fortunate because these children are running track for these universities and got academic scholarships, so they are a little bit of the exception

to the rule. But in my education work with LULAC in providing scholarship moneys, I come across a lot of Hispanic students who are superb students, excellent students, and we say to them, when you work hard and you achieve, then you should go to the very finest universities this country has to provide. It should be the Harvards and it can be the Stanfords and it can be the Notre Dames. It can certainly be the State colleges. My point to you is that that FAF assistance for college students is ludicrous. If private universities cost $18, $19 or $20,000—and that is a debate for another day—and these students do what they are supposed to be doing in terms of their grades and the most that they can borrow is $2,600 a year there is something wrong with that picture. They cannot go to those universities. Now, they can get those in grants. The most they can get in grants. They can borrow $20,000 a year but I can assure you, if those parents of those successful children feel like I do, they are not going to ask their kids to get in $100,000 worth of debt at the end of 4 years. We have a problem. I would like to see the FAF continued certainly, definitely not cut and increased if we can, especially for those students who are high achievers. Those minority students that we say, you know what, you can be success stories if you work hard. But let us give them an opportunity, let us be real about financing the very best education this country has to offer.

In closing, again while no one argues that reform is necessary in many areas, constituents from their respective States need to send a message to Washington that the poorest of the poor should not shoulder such oppressive burdens. We know there is a need for reform. Government is about addressing America's needs, and gentlemen, that is all Americans.

Thank you very much.

Mr. CLINGER. Thank you, Ms. Mescall, for very compelling testimony. We appreciate your presence here today and bringing us your perspective.

Mr. Strunk.

Mr. STRUNK. Good afternoon, Mr. Chairman, and members of the committee. I am Steve Strunk, chief administrative officer of Boatmen's Sunwest, Inc., which is the largest financial institution in the State of New Mexico with $3.8 billion in total assets.

Thank you for the opportunity to testify today. Each of you have enormous responsibilities to the citizens of our Nation and I know that it must be extremely difficult to balance the needs of so many different people. I also realize that it must be particularly difficult to serve on this committee, since a successful effort will require varying degrees of sacrifice from each one of your constituents. I would like to personally thank each of you for taking on the enormous challenge that has been presented to this committee.

In 1968, when I was a junior in high school, I wrote a term paper expressing my concerns regarding the size of the accumulated Federal deficit. At that time, the Federal Government had accumulated approximately $200 billion in debts during the first 192 years of the country's existence. As you know better than I do, since that time, we have been accustomed to running annual Federal deficits which have been in excess of $200 billion per year. During the past 30 years the Federal Government has successfully undertaken

many projects that have benefited our society, but the time has clearly come for the Federal Government to exercise a much greater degree of fiscal discipline which will require our U.S. Congressmen and Senators to make extremely difficult and politically unpopular decisions. However, unless our Federal Government can begin to exercise greater financial discipline, which would be working toward a more balanced Federal budget, Americans will continue to experience a decline in their real standard of living in their overall quality of life. The individuals who will pay the ultimate price for, "business as usual," will not be the people gathered today in this room, but rather, it will be our children who are not currently in a position of helping us make the difficult decisions which require current sacrifice.

From a businessman's and a community leaders perspective, I would like to share with you five ideas that might be of assistance to you in attempting to reform the Federal Government.

No. 1, greater use of sunset legislation. I believe that no one in this country is familiar with all of the existing Federal laws and why they continue to be in effect. From a historical perspective, we may be able to develop an understanding of why legislation was originally enacted, but it would be much more difficult to explain why certain legislation continues to remain in effect other than inertia and a vast array of other perhaps more urgent issues which require your deliberation and action. I do not know what the appropriate time period should be for the life of Federal legislation, whether it is 4 years or 5 years; however, I would ask that the Congress at least consider instituting sunset legislation more frequently. And if an issue was important enough to have Federal legislation, than it would require the Congress to act on those issues. This would help to ensure that Federal money did not continue to be spent on programs which were either one, antiquated; two, no longer required; or three, no longer a significant priority enough for our society.

My second idea has to do with implementing an increase in the number of auditors within the Federal Government. A publicly owned company cannot continue to have credibility with its shareholders, nor could management keep their jobs if the company sustained the same type of media assaults regarding waste and inefficiency that the Federal Government now experiences on an almost weekly basis by the pervasively popular prime time, "news shows."

If the media can uncover so much waste and inefficiency within the Federal Government, it seems to me that there must not be a sufficient number of auditors within the Federal Government. Although a proposal to increase the number of Federal Government auditors runs counter to the desire to reduce Federal expenditures, the media should not be the party that is bringing Federal Government waste and inefficiency to the public's attention. Another approach to address this problem would be to hire more external auditors to investigate Federal Government expenditures, which leads to my next idea.

My third idea is to consider privatizing more Federal Government functions. Certain functions currently administered by the Federal Government can clearly only be performed by the Federal Government. Examples include the CIA and the FBI. Other Fed-

eral Government functions more readily lend themselves to privatization. Examples might include prison incarceration. This is certainly not a new idea, but one that I believe is worthy of further research and implementation. The private sector has a greater ability to perform functions on a much more cost effective basis than any level of government.

The fourth idea is to consider providing financial incentives to Federal Government employees for recommending expense savings ideas. During the past decade as corporate America has attempted to become leaner and meaner, it has become rather commonplace for businesses to offer their employees a small percentage, say 5 to 10 percent, for any expense savings ideas resulting in actual savings for the business. For example, if a private sector employee submits an expense savings idea which results in a $200,000 reduction in expenses over the next 12 months, the employee would receive $10,000 at a 5-percent payout. Not only does the company save $190,000 during the first year, but the business benefits from a $200,000 expense savings on an ongoing basis. Although I am sure that many Americans would resent this type of incentive compensation for Federal Government employees, financial incentives have proven to be a very effective tool for changing and motivating employee behavior within the private sector. I believe that this type of financial incentive could work within the Federal Government.

The fifth idea relates to instituting more federally administered programs or functions which are financially self-sustaining. Two examples of where this strategy has worked is the bank insurance fund which insures deposits within the commercial banking industry. The beauty of the bank insurance fund is that the insurance protections for the public's deposits has been funded by the private sector, that is by the commercial banking industry. Although there are political battles currently being waged in Washington right now to saddle the commercial banking industry's bank insurance fund with the financial responsibility for repaying the RTC debt obligations which were used to bail out the savings and loan industry, the bank insurance fund remains a good example of private sector funding of a societal need, that being the protections of the public's financial deposits.

A second example. Although, I am not intimately familiar with the financial operations of the U.S. Post Office, it is my understanding that this Federal Government function has operated on a financially self-sustaining basis since the early 1980's, which represents a second example of what I would consider to be responsible financial funding.

Social Security represents the largest Federal Government failure to fund a societal need on a financially self-sustaining basis. I was a double major in finance and insurance when I attended college approximately 20 to 25 years ago. As a result, I studied pension plans and the social security system. I was shocked to learn that if the Federal Government had segregated and invested the social security taxes that it had collected, each social security recipient in the early 1970's could have been receiving $25,000 per year without touching the corpus or principal of the social security taxes that had previously been collected. Although, I believe the use or

misuse of the social security tax receipts is the worst example of financial irresponsibility on the part of the Federal Government, this does not mean that the Federal Government should cease its efforts to institute more federally administered programs or functions which are financially self-sustaining.

I sincerely appreciate the opportunity to participate in today's committee hearing and I wish you all the best in your efforts to design a more effective Federal Government.

Thank you.

[The prepared statement of Mr. Strunk follows:]

Statement of Steven A. Strunk
Chief Administrative Officer of
Boatmen's Sunwest, Inc.
Albuquerque, New Mexico

Committee on Government Reform and Oversight
Hearing on "Creating a 21st Century Government"
October 9, 1995

Good Afternoon, Mr. Chairman and members of the Committee.

I am Steve Strunk, Chief Administrative Officer of Boatmen's Sunwest, Inc., which is the largest financial institution in New Mexico with 3.8 Billion in total assets.

Thank you for the opportunity to testify today. Each of you have enormous responsibilities to the citizens of our nation and I know that it must be extremely difficult to balance the needs of so many different people. I also realize that it must be particularly difficult to serve on this committee, since a successful effort will require varying degrees of sacrifice from each one of your constituents. I would like to personally thank each of you for taking on the enormous challenge that has been presented to this committee.

In 1968, when I was a junior in high school, I wrote a term paper expressing my concerns regarding the size of the accumulated federal deficit. At that time the federal government had accumulated approximately $200 Billion in debts during the first 192 years of the country's existence. As you know better than I do, since that time we have been accustomed to running ANNUAL federal deficits, which have been in excess of $200 Billion.

During the past 30 years the federal government has successfully undertaken many projects that have benefited our society, but the time has clearly come for the federal government to exercise a much greater degree of fiscal discipline, which will require our U.S. congressmen and senators to make extremely difficult and politically unpopular decisions. However, unless our federal government can begin to exercise greater financial discipline,...working towards achieving a more balanced federal budget, Americans will continue to experience a decline in their real standard of living and their overall quality of life. The individuals who will pay the ultimate price for "business as usual" will not be the people gathered today in this room, but rather it will be our children, who are not currently in a position of helping us make the difficult decisions which require current sacrifice.

From a businessman's and community leader's perspective, I would like to share with you five ideas that might be of assistance to you in attempting to reform the federal government.

I. Greater Use of Sunset Legislation

I believe that no one in this country is familiar with all of the existing federal laws and why they continue to be in effect. From a historical perspective, we may be able to develop an understanding of why legislation was originally enacted, but it would be much more difficult to explain why certain legislation continues to remain in effect...other than inertia and a vast array of other,...perhaps more urgent, issues which require deliberation and action. I do not know what the appropriate time period should be for the life of federal legislation (4 years?), but at least the Congress would only consider continuing expiring federal legislation (pursuant to sunset provisions) if it was important enough to be continued. The greater use of sunset provisions would help ensure that federal money did not continue to be spent on programs which were: 1) antiquated, 2) no longer required, or 3) no longer a significant enough priority for our society.

II. Increase The Number of Auditors Within the Federal Government

A publicly owned company could not continue to have credibility with its shareholders nor could management keep their jobs if the company sustained the same type of media assaults regarding waste and inefficiency that the federal government now experiences on almost a weekly basis by the pervasively popular prime time "news" shows. If the media can uncover so much waste and inefficiency within the federal government, it seems to me that there must not be a sufficient number of auditors within the federal government. Although a proposal to increase the number of federal government auditors runs counter to the desire to reduce federal expenditures, the media should not be the party that is bringing federal government waste and inefficiency to the public's attention. Another approach to address this problem would be to hire more external auditors to investigate federal government expenditures, which leads to my next idea.

III. Consider Privatizing More Federal Government Functions

Certain functions currently administered by the federal government can clearly only be performed by the federal government. (Examples include the CIA and the FBI). Other federal government functions more readily lend themselves to privatization. (Examples might include prison incarceration). This is certainly not a new idea, but one that I believe is worthy of further research and implementation. The private sector has a greater ability to perform functions on a much more cost effective basis than any level of government.

IV. Consider Providing Financial Incentives to Federal Government Employees for Recommending Expense Saving Ideas

During the past decade as corporate America has attempted to become leaner and meaner, it has become rather commonplace for businesses to offer their employees a small percentage (5% to 10%) for any expense saving ideas resulting in actual savings for the business. For example, if a private sector employee submits an expense saving idea which results in a $200,000 reduction in expenses over the next 12 months, the employee would receive $10,000 (at a 5% pay-out). Not only does the company save the $190,000 during that first year, but the business benefits from a $200,000 expense savings on an ongoing basis. Although I am sure that many Americans would resent this type of incentive compensation for federal government employees, financial incentives have proven to be a very effective tool for changing and motivating employee behavior within the private sector. I believe that this type of financial incentive could work within the government sector.

V. Institute More Federal Administered Programs/Functions Which Are Financially Self-Sustaining

Two examples of where this strategy has worked is the Bank Insurance Fund which insures deposits within the commercial banking industry. The beauty of the Bank Insurance Fund is that this insurance protection for the public's deposits has been funded by the private sector, i.e., the commercial banking industry. Although there are political battles being waged in Washington right now to saddle the commercial banking industry's Bank Insurance Fund with the financial responsibility for repaying the RTC debt obligations, which were used to bail out the savings and loan industry, the Bank Insurance Fund remains a good example of private sector funding of a societal need...the protection of the public's financial deposits.

Although I am not intimately familiar with the financial operations of the U.S. Post Office, it is my understanding that this federal government function has operated on a financially self-sustaining basis since the early 1980's, which represents a second example of what I would consider to be responsible financial funding.

Social Security represents the largest financial government failure to fund a societal need on a financially self-sustaining basis. I was a double major in finance and insurance, when I attended college approximately 20 to 25 years ago. As a result, I studied pension plans and the social security system. I was shocked to learn that if the federal government had segregated and invested the social security taxes that it had collected, each social security recipient in the early 1970's could have been receiving $25,000 per year without touching the corpus or principal of the social security taxes that had previously been collected.

Although I believe that the use (or misuse) of social security tax receipts is the worst example of financial irresponsibility on the part of the federal government, this does not mean that the federal government should cease its efforts to institute more federal administered programs/functions which are financially self-sustaining.

I sincerely appreciate the opportunity to participate in today's Committee hearing and I wish you all the best in your efforts to design a more effective federal government.

Mr. CLINGER. Thank you for your very helpful suggestions. I want to thank all of you for very interesting and productive testimony, and I would now recognize for the first round of questions, the gentleman from New Mexico, Mr. Schiff.

Mr. SCHIFF. Once again, Mr. Chairman, I am very proud of the witness panel here, we got a diverse group of views, and not to my surprise, by the way, since I had something to do with you being invited here today, and I am glad we had a diverse approach.

Just because time is getting a little short, I am going to be very brief and have just a question and observation for each of you.

Mr. Rhodes, you and I met, of course, through your involvement in Quatro Corp., you are building a high tech business in Albuquerque, which I think is a model. Could you list briefly one or two or three things that the Federal Government might be able to do to promote the establishment and the growth of high tech business, whether it is affirmative or whether it is just get out of the way? That is your choice in responding, but I wonder if you could give us a couple of examples of where we should go?

Mr. RHODES. Sure, Mr. Chairman, Congressman. By and large it is the latter, it is get out of the way. If we look at the regulations and data that we have to record and archive now for Federal purposes, it just adds to the cost of our doing business. We would be much more streamlined and would not require the same functions if those were not in place. I had our human resources people list the various requirements that we have and I was pretty shocked to see page after page of data that are required for us.

That would be the primary function.

Mr. SCHIFF. Ms. Mescall, I would like to make a couple of observations, but in fairness let you respond however you want to respond.

Ms. MESCALL. You bet.

Mr. SCHIFF. You made references to certain political terms, "Contract with America," "GOP," a couple of times. So let me say it so happens that all of us up here are Republican but this is not a Republican committee. A Democratic Representative who was going to join us had a child become ill at the last minute and simply was not free to be here. So the committee, of course, as a committee of Congress, is bipartisan. But since you brought up that point, I would like to make two observations.

One is general about government, not necessarily Republican or Democratic, but you expressed concern about will States essentially pick up programs that the Federal Government might not be sponsoring any more. And I want to observe that in the process of programs moving to the States, and some are moving, I am sure of that, maybe the public will become more involved with the State government. And this is not actually meant to be Republican or Democratic, or for or against any particular Governor, but there is a remarkable drop off, as I am sure you are aware, of the number of people who choose to vote during the national election on the non-Presidential selecting year, even though in New Mexico, we elect our Governor and all our State officials during that year. And I personally believe that when certain programs do move to the States, I think maybe it will foster a greater involvement and interest in State government than I believe currently exists.

The second observation on the partisan issue is I do not agree with every decision the Republican leadership has made in Congress either. And we have our own tugs of war as I know the Democratic Party does across the hall. But I will make this observation that when you say we know welfare needs reform—my observation in my 7th year in Congress is that I have seen at least 6 years where the other majority had a chance to do it and did not—did not do a thing. And I think that there is a price to pay for that. There is a price to pay for inaction, that a group may lead on an issue in a direction which, again, I do not share every single goal with, but which I think is moving because there was no action in previous years when there should have been action.

That is my observation. With that, I have no question, but if you would like to respond on either or both of those——

Ms. MESCALL. I would like to comment. You are absolutely right, there has been no change in the area of reform, and that has been through several Presidents. You know, it has been through Republican and Democratic legislation. It is a problem that we can equally share, no matter what the ideologies are. I think that is a fair statement.

Mr. SCHIFF. Except the majority in the House was under one part and that is where legislation originates.

Ms. MESCALL. Yes. Well, we will see what this change will look like, and that remains to be seen, what will happen and what the impact will be.

I think my concern continues to be, Congressman Schiff, that—I know that my position is that we need some reform, we need some changes, it has not been run well. When the changes come, I agree with both of the speakers up here with me today, it should be gradual so that it is done well. What I am concerned about is that these very difficult decisions that impact real live people is done with some sensitivity, that we do not make these sweeping decisions on the backs of the very poorest, especially children. And those are some considerations, I am sure that are not going to be ignored. I think it needs to be said over and over again. I think that different regions and different States vary tremendously. You were in the State of Washington yesterday, I am sure that the sorts of things that you were hearing there, if you had a community representative advocate, as myself, can be very different than here in New Mexico. I am simply saying that all of these changes and reforms need to consider the people element. And I am concerned about New Mexico, frankly.

So yeah, it is a bipartisan issue that we all need to be involved in and need to take responsibility. I want to make that very clear as well.

Mr. SCHIFF. I just want to conclude this point by saying I agree with you. I would have preferred to see a more gradual change and shift of things so that we can carefully evaluate are we making the right decision.

Ms. MESCALL. Sure.

Mr. SCHIFF. There was no gradual change at all during the years that I was present to watch what was going on. And I think the result of no change is that change because rather pronounced, let

us put it that way. And I just think if it is not one, it is the other. And I would have preferred and still prefer a more gradual change.

My time has expired, but with the chairman's permission, Mr. Strunk, I actually just wanted to thank you for your testimony, particularly with ideas on sunset provisions. I mean laws can be well intentioned and even effective when they are passed. That does not mean they are still serving their usefulness 5 or 10 or 15 or 20 or 25 years later, as the case may be. And I think that is one of several good suggestions you made for us.

Thank you, Mr. Chairman, I yield back.

Mr. CLINGER. Thank you, Mr. Schiff. And I am now pleased to recognize the gentleman from California, Mr. Horn, for 5 minutes.

Mr. HORN. Thank you, Mr. Chairman.

I read Dr. Rhodes' testimony and I heard most of Ms. Mescall and all of Mr. Strunk and I want to thank each of you for the fine contribution you have made to this hearing.

I am not going to really ask a question of this panel except I am going to make a comment, I am going to quote from a recent memoir paragraph, "My American Journey" by Colin Powell, former chairman of the Joint Chiefs of Staff, what he has to say about public education. I was interested in your comments and your mentioning of a few, quote, prestige universities. I want to lay down the record as a holder of a few degrees from prestige universities, much as Dr. Rhodes has held them from public universities, and as a graduate of Stanford and Harvard, let me say I will match the public universities of American any time against the elite prestige universities in terms of quality of under-graduate education in particular. General Powell reflects these views, so I am going to quote from him. He says, "Yet even this C average student emerged from the City University of New York prepared to write, think and communicate effectively, and equipped to compete against students from colleges that I could never have dreamed of attending. If the Statue of Liberty opened the gateway to this country, public education opened the door to attainment here. Schools like my sister's Buffalo State Teachers' College and the City University of New York have served as the Harvards and Princetons of the poor, and they served us well. I am consequently a champion of public secondary and higher education. I will speak out for them and support them for as long as I have the good sense to remember where I came from."

I notice with interest Dr. Rhodes has his Bachelors degree in chemistry from Arizona State University, his Ph.D. in physical chemistry, minor in metallurgy, from the University of Utah. I was for 18 years president of California State University in Long Beach. Some of my first rate students happened to be Hispanic. I graded by the same standard I graded at Harvard and Stanford, on an absolute. They received As, they could have done the work at Harvard and Stanford and they did it at Long Beach and they will be major contributors to our society, as most public graduates are.

The most important thing people in a State can do—and you have a first rate university here at the University of New Mexico—they reformed medicine. Harvard Medical School copied the University of New Mexico. And you ought to be proud of that work,

and the key is the investment of the people in public higher education. That is where opportunity comes from in this society.

Thank you, Mr. Chairman.

Ms. MESCALL. May I comment?

Mr. HORN. Certainly.

Ms. MESCALL. I am a product of a public university institution, you missed my point. My point is that if a student wants to go to the University of New Mexico, University of Utah, Harvard or University of Notre Dame, they should have the opportunity to have some of those choices. That is simply the only point that I wanted to make.

Mr. HORN. Yes. Harvard has the money to give scholarships. They cannot give to them to all. And so does Stanford. And they both charge what I regard as outrageous tuitions now.

Ms. MESCALL. I agree.

Mr. HORN. And I do not think—I think they need to go downsizing in some of these universities and find what they really need to do.

Mr. CLINGER. The gentleman from Arizona.

Mr. SHADEGG. Thank you, Mr. Chairman.

Again, I guess I would like to join Mr. Schiff in complimenting each member of this panel for their thoughtful testimony.

Mr. Rhodes, I want to focus for a minute on you and your expertise. As I mentioned, the members of the freshman class began with a goal of eliminating at least three or four cabinet level agencies, we will at best eliminate one. And when you eliminate an agency, you really only eliminate some of its functions because clearly there are some functions within every agency which need to continue and continue at the Federal level.

One of the things that troubles me is that I think all too often in the Federal Government, we produce the maximum pain for the minimum gain. For example, some of us believe that the Federal Government should not be in the business of financing the National Endowment for the Arts. We simply think that is not a fundamental function of the Federal Government—or the National Endowment for the Humanities. So we would like to see those programs zeroed. In point of fact, what we have done is cut them to some degree but not eliminated them. Nobody wanted them cut a little bit. Some people wanted them to grow, some people wanted them to be gone, and what we do is we cut them a little bit, which does not make the people who want them to grow happy, and it doesn't not make the people who want them gone happy. So it produces a strategy of maximum pain/minimum gain. And it is at times, at least for me as a freshman, quite frustrating.

Your concluding remarks talk about bold action and radical surgery. One of the departments that we as freshmen talked about eliminating was the Department of Energy, and I am on a task force to eliminate the Department of Energy. There again, there are functions of the Department of Energy that are important, perhaps vital and important for the Federal Government to perform. There are other functions that I think need not be done at all, and certainly not done by the Federal Government, perhaps not by any level of government.

I guess with your expertise, I would ask your suggestions regarding the Department of Energy and whether or not you feel that it ought to be eliminated or you feel it is performing an important function and what functions you think might need to be preserved, if any, and what you would eliminate—your view on that particular agency.

Mr. RHODES. Sure. Mr. Chairman, Congressman, I would advocate dismantling the department. The original reason that we separated the nuclear weapons expertise from the military are no longer present, in my view. If we cannot trust our generals to handle nuclear weapons at this point in time any better than we could in 1945 or 1948, I think we would have a problem. And that is the residual main function of DOE, which has agglomerated numerous pieces of expertise from different agencies as they went into solar energy. As they went into geothermal, they pulled blocks out of National Science Foundation and other locations, and put it under this umbrella organization. It does not function as an energy department now, nor has it ever.

Mr. SHADEGG. Thank you.

Mr. SCHIFF. Would the gentleman yield for 1 second?

Mr. SHADEGG. Certainly.

Mr. SCHIFF. A number of Members of Congress are interested in a Department of Science. This is not the environment, as you can expect, to be creating new departments, but nevertheless, there is a number who share the idea that one department would create a national science policy in this country, not that that would not be without its individual problems, but I wonder, having heard what you said about the Department of Energy, what would your view be of a Department of Science?

Mr. RHODES. Well, I am not sure I could support a department level being created. Certainly the function is valid for the economic security of our country and what is sustaining our world position is the growth of technology and our leadership in many of the areas—in computer technology specifically. But department levels should be very carefully considered to only those extremely critical functions, in my view, not that the Federal Government should not sustain some residual role. But if you will look across the national laboratory structure in this country, you will see a great amount of waste, fraud and abuse. We have selected the best and the brightest and brought them into these constructs and have taught them that they do not have to be accountable. I think Sandia is actually exemplary in having a mission statement of making people accountable and having more productive citizens.

As I look at the other national labs, including the one that I happen to be a guest scientist at, I do not see the same type of productivity or accountability.

Mr. SCHIFF. I yield, I thank the gentleman for yielding.

Mr. SHADEGG. I appreciate those comments. Do you have your own views on why that accountability or productivity does not exist elsewhere?

Mr. RHODES. Well, I think it is just, without the sunset provisions we created the laboratories, they had great need when they happened, but after the programs were put in, the money came in over the transom, and to some degree it still does. It floats in over

the transom and every time you talk about a cut, people wring their hands, and yet there are not necessarily productive programs with milestones in productivity that is being demanded. And until you change that, until people really worry like they do in the private sector about sustaining their jobs, and that they can be fired if they are not productive, that will not change.

Mr. SHADEGG. With all due respect, I am not going to get on the sunset bandwagon quite yet. We had sunset legislation in the State of Arizona. For many, many years while I was in the Arizona Attorney General's Office, part of my job was to monitor all State legislation and testify before the legislature on a daily basis, and at least from my observation, sunset was—and I do not want to be too strong here, but in my view, an unmitigated failure. What it did was cause each agency to simply go in and find the little constituency that it was serving, rally that constituency to come in and lobby that it was doing a wonderful thing and the only reason that it did not get a rave review by the State auditors was because it did not have quite strong enough regs, it needed a little bit more statutory authority, it certainly needed more money and it certainly needed more people to enforce its authority.

And quite frankly, I believe what is causing that lack of productivity is what you said at the end, and that is the lack of private sector incentives, a bottom line—profit, succeed, fail. And I am not certain that it is possible, though I have spent a great deal of my life looking, and I will continue looking, to make government respond the way the market makes the private sector respond. We are right now doing sunset for regulations at the Federal level through a subcommittee that I serve on of this committee with Representative David McIntosh, and we are going to sunset hopefully future regulations. My fear is that the process will simply lead to us writing stronger and tougher regulations, and I am not at all convinced that is the answer.

I think my time has expired.

Mr. CLINGER. The gentleman's time has expired.

I just wanted to make a comment to Mr. Strunk. We have under the jurisdiction of this committee a piece of legislation that speaks to the concern that you have. It is called the Chief Financial Officers' Act, and it requires the appointment of a qualified person to be the Chief Financial Officer of every agency and department, and it has only recently begun to be implemented, but I think it is going to have a profound effect on the way we operate and the fact that we will have really good audits of these funds that we never had before. So I hope that encourages you to think——

Mr. STRUNK. It does, thank you very much.

Mr. CLINGER [continuing]. That we are in fact dealing with some of these things.

We are getting a little pressed for time here, so I am going to thank all of you for your participation, really appreciate your testimony and we will look forward to having your testimony as part of our record. Thank you very much.

We now move to the next portion of our hearing, and again I am going to turn to Congressman Schiff to introduce the members who will be giving oral testimony, I gather from this microphone. If you

speak from this microphone, you do not have to get sworn, so that is an advantage of speaking from that microphone.

So I will turn it over to Congressman Schiff to introduce the interlocutors that will be speaking now, for 5 minutes each.

Mr. SCHIFF. Thank you, Mr. Chairman. Mr. Chairman, I just want to say again that we invited—the number came down to seven I believe—individuals who hold unique positions in our community or who represent large groups of individuals across the spectrum of our community. Once again, we could not get everybody who might quality in either of those descriptions for lack of time, but did our best as I hope everyone feels we did, in the three panels that we have already heard from.

And I would like to call first upon the—for up to 5 minutes—the president of the University of New Mexico, Dr. Richard Peck. Dr. Peck, welcome and thank you for coming. With or without being sworn, the microphone is yours.

STATEMENT OF RICHARD PECK, PRESIDENT, UNIVERSITY OF NEW MEXICO

Mr. PECK. Thank you, Mr. Chairman, members of the committee.

I will be brief, with a probably foolish suggestion, or I have been told that by a State legislator, it is something I know works at the University and I would love to see it introduced into all levels of government. Most governments that I am aware of have a funding policy that says as you near the end of the fiscal year, in order not to have your surplus money sucked up, you buy a railroad car full of chalk or something in order to spend the money. And those departments that have run into a deficit have their deficit forgiven or paid for from some mysterious pot elsewhere. Those that have actually been efficient in the management of their funds have that efficiency punished by having their funds taken away.

Eight years ago, a new vice president at the University of New Mexico changed our practice and policy. If a department shows a surplus at the end of the year, the department keeps half of that surplus for one-time expenditures, for capital needs, for special projects. The other half is taken back. A department that shows a deficit has that deficit removed from the first week's allocation the next year and they start the next year's budget lower by the deficit they incurred at the end of the preceding year.

I will suggest—I can give you a very clear demonstration of how that works. We have a Dean of Arts and Sciences at the University that inherited a college when he took over with a $2 million deficit. He removed it in 2 years by telling each department they got to keep half of what they saved from their operating budget, the other half went to reduce the deficit. The deficit is gone now, he is running a college that is in the black.

This year, we faced a 2.5 percent cut mandated by the State, moneys held back. That college that only 3 years ago was $2 million in debt, was able to pay its 2.5 percent out of savings in this year without reducing any other existing programs.

A question that you might reasonably ask is if they have that surplus, why do we not simply but their budget the next year? Congressman Shadegg said we need to have available to them the same incentives that are there for private enterprise. If you do not

let them keep any of it, they will go back to the old system of spending everything in the year. If a department has a surplus 3 years in a row, we will then reduce its budget by the amount of the surplus and we will start over again. But there is an incentive there that encourages efficient management, penalized inefficient management and I do not believe that is the way other universities or most governments operate, where efficiency is frankly punished.

My suggestion a brief and probably foolish one. I say that because I have not seen our State legislators leap to adopt it though I proposed it to them some weeks ago.

Mr. CLINGER. I think it is an outstanding suggestion and I really welcome it.

Mr. SCHIFF. Probably one of the major problems—if I may be recognized, Mr. Chairman—probably one of the major problems in government planning now, when I became district attorney in this county back in 1981, we were getting into the computer age, and the question was how do you pay for all the hardware at that time. I had the idea of saving a certain amount out of one fiscal year's budget and then putting that with a similar savings in the second year's fiscal budget and buy our computers, we will not have to ask for any special capital outlay. I was told by a number of people more experienced with State government than me, and I do not want to pick on the State, but I think it is a universal problem, that is the dumbest thing you can do because if you save a certain amount of money, first they will revert it back to the general fund at the end of the year; and second, in the second fiscal year, they will decide you did not need it in the first place and reduce it from your budget. So we never bought the trainload of chalk and hoped we used money efficiently, but the idea of trying to save and trying to economize is very laudable.

I would even add one suggestion. I would say that if you have a manager that is good enough to save money, I would not be so hurried to lower the budget in 3 years. I would at least work with him about how would you use the money if you continued it, I would continue that incentive.

Thank you, Dr. Peck.

Mr. PECK. Yes, sir.

Mr. CLINGER. Any other questions?

[No response.]

Mr. PECK. Gentlemen, thank you.

Mr. CLINGER. Thank you very much.

Mr. SCHIFF. Mr. Chairman, in any change in the Federal Government, people who will be very affected will be of course the people who work for the Federal Government. And we have invited the American Federation of Government Employees to send a representative, and they have sent Mr. James Red. Mr. Red, welcome.

STATEMENT OF JAMES RED, UNION STEWARD, AMERICAN FEDERATION OF GOVERNMENT EMPLOYEES, LOCAL 4041

Mr. RED. Sir, I hope you do not mind if I sit. I have a bad back.

Mr. CLINGER. Fine.

Mr. RED. Mr. Chairman, my name is James Red and I am a union steward with the American Federation of Government Employees Local 4041, and on behalf of the AFGE and my president,

President Loretta Montoya of Local 4041, I would like to thank you for the opportunity to testify here today about the government of the 21st century.

Now we were given 5 minutes to give about 20 some sheets of paper here——

Mr. SCHIFF. If I can interrupt, Mr. Chairman, I ask unanimous consent that Mr. Red's and all other statements be included as part of the record as if fully stated.

Mr. CLINGER. That will be done.

Mr. RED. Thank you, sir.

I would like to talk about partnership. I have served close to 30 years in the Federal Government, both in the military and with the Social Security Administration. And I can tell you about what we term as the decisionmaking process in regards to social security where you have the upper management that sends decisions down to the employees. This does not work very well because what it does is it stifles the employees' decisionmaking process of going back up. In the military, where you have a chain of command where word comes down and then word goes back up, we do not have that very well in the agency that I am in.

So in regards to the decision process and the partnership that we talk about, we talk about employee empowerment, and this is where your front line workers, who know their jobs, know their positions, they know the definitions that they have to work under, they are involved into the decisionmaking process and sending it back up.

Labor and management in partnership is the name of the game for the 21st century. You have management, you have union and you have employee. What management and union and employee will do in the 21st century is we together, especially with the AFGE, will set the goals, we will sit down and talk about what we are supposed to achieve. The next thing we will do is set the objectives to meet those goals. And then the third thing we will do is teach the tasks on all ends of this line, to get the mission accomplished.

AFGE's new vision is the front line worker and the empowerment phase. We believe in a partnership. Under Executive Order No. 12871 by President Clinton, labor and management will achieve the goals together. So that is the direction that we are following.

And the two examples that I give to you are both in Albuquerque, NM. The first one I will use will be the Albuquerque Tele-Service Center, which is located at Bradbury. We have over 600 employees that work with us, and we represent close to 500 employees, we have close to 180 union members that are full time employees at the Tele-Service Center. Through the management at the Tele-Service Center and through our employees and the first line supervisors and the front line employees, we have put together a plan and program that has enabled our Tele-Service Center and the other Tele-Service Centers that deal with Social Security Administration across the Nation to be the best recognized in teleservice centering, and that includes—we won against AT&T, we won against Nordstrom, we won against Disney and other major

corporations that deal very heavily into the tele-service arena. So we came out No. 1 on that, and we did that this year.

The second thing is with the VA. Now I am a disabled veteran, that is why I am sitting instead of standing, and I frequent the VA Hospital in Albuquerque usually on a monthly or bi-monthly basis. And when I first came here, it was nothing for us veterans to sit 3 to 4 hours before being waited on. Since they have gone to the empowerment of the employee, the union and the management, they have reduced that from up to 4 hours, down to 30 minutes before you are waited on. And the people out there are outstanding, they really work hard to help us out.

The second example that I have is that with the Social Security Administration we have shown that when you let the employee work with the management and let the union be in the center of the affair, that things work out, things do work.

Another change that we have here is that people are going to resist changes. We have heard the audience say that today, that you will have a resistance to change—that is human nature. We see that both in the union, we see it with the employees and we see it with upper management. People are afraid. I have 600 people out there that are afraid they are going to lose their jobs. I have talked to Congressman Schiff, to both Senators and our entire congressional delegation, that we have people that are afraid and they kind of resist the changes about to take effect here.

But we see that the partnership and as the other gentlemen and ladies were talking to up here is when you talk about your partnership, what you do is you educate the employees and you educate the management, and that is what the union is doing—that is what we are doing, we educate the management and we educate the employees to the need for change.

Mr. SCHIFF. I have to, with regret, Mr. Red, ask you to move to a conclusion, and again stress that your entire written statement will be part of the record.

Mr. RED. Thank you, sir.

The last thing I have to say is thank you very much for letting AFGE make its presentation to you. We have the full testimony there. If you have any questions for us, please feel free to ask.

[The prepared statement of Mr. Red follows:]

JAMES RED

AMERICAN FEDERATION OF GOVERNMENT EMPLOYEES
AFL-CIO
LOCAL 4041

Mr. Chairman, my name is James Red and I am a union steward with the American Federation of Government Employees Local 4041. On behalf of AFGE, I would like to thank you for the opportunity to testify here today about the government of the 21st century.

The current desire to transform the management and administration of the federal government is not new. Since the modern civil service system was created over 100 years ago, civil service reform has been a recurring theme in our political culture and a frequent target of Democrats and Republicans alike. Many of these past reform efforts were built on the false premise that federal employees are inept or untrustworthy, and should shoulder the blame for the low esteem in which government is often held. Politicians of all stripes discovered that one way to get elected was to run against government, and the best way to run against government was to run down government employees.

The sad but predictable results of these exercises in bureaucrat-bashing ranged from the misguided attacks of the Grace Commission to the failed centralized management control schemes of the Civil Service Reform Act. Reform efforts like these have largely failed to accomplish what they set out to do: improve the performance of government.

As a nation, we can do better than this and we must. The dedicated men and women who make up the federal civil service -- over 2 million hard-working Americans -- are a vital part of our democratic government. It is federal workers who transform the

rough mandate of laws passed by Congress into the indispensable reality of government services and benefits. Whether stopping the flow of illegal drugs or caring for veterans, federal employees serve as a tangible reminder that in a democratic nation, the government exists to serve its citizens.

But this democratic promise of government is under strain. Today the most visible threat comes from an anti-government frenzy that has many in Congress engaged in a futile and destructive bidding war to see who can cut the most federal programs or slash the most federal jobs. What the slash and burners fail to recognize is that the cries for deficit reduction have not and will not reduce the taxpayers' insistent demand for high-quality services or the skilled performance of basic governmental functions. Whatever government does and whether it costs less or not, it is federal employees who must ensure that it is done well and meets the needs of a demanding public. Every endeavor of the federal government ultimately relies on the skills, ability, and motivation of federal workers.

Tied closely to the harsh realities of budget deficits and the steady demand for high-quality government services are the demographic and technological changes reshaping the character of the federal civil service. The years ahead promise far more ethnic, racial, and sexual diversity in the workforce. The increasing number of two-income families and an aging population will demand more flexible work schedules and dependent care

services to help those struggling to balance child care, elder care, and other family commitments.

Rapid changes in technology will fundamentally alter the nature of work, requiring higher-skilled employees who can adapt quickly to a constantly changing work environment. Management and labor are both facing the need to reduce costs, upgrade skills, improve productivity, and ensure the delivery of high-quality service.

Unfortunately, the Civil Service Reform Act of 1978 (CSRA) is painfully out of step with the challenges facing federal service as we move to the next century. In fact, it is fair to say that the current civil service system is at the heart of the government's most enduring performance problems and has contributed more than any other factor to the lack of faith many Americans have in their government, the sense of many that government simply does not work.

The problems with the CSRA are deeply rooted. The structural foundation of the Act is an obsolete management philosophy which evolved in the early part of this century and reached its zenith in the corporate culture of the 1950s. This organizational model emphasized centralized control with layer upon layer of management to keep it tightly in place; autocratic, top-down decisionmaking; and rigidly defined and simplified job tasks. With its emphasis on control, rules, and standardization, this model was designed to take the thinking out of work and to devalue and discourage employee participation in workplace decisionmaking.

The federal civil service system effectively replicated this "command and control" model of corporate bureaucracy. The government and its front-line workers were being strangled by red tape and silly rules, buried under stacks of pointless paperwork, and constrained by layers of mid-level managers who did little but watch others work. This system was designed in every way to avoid mistakes, not to produce results.

By the early 1980s, American businesses began to abandon this outdated management philosophy of "command and control" in order to remain competitive and survive in the new world of tough global competition, complex new technologies, and lightening-fast communications. These companies learned the hard way that in the transformation from an industrial age to an information age -- from the Model T to the computer chip -- a premium is placed on intelligent, highly-trained, creative workers who can analyze new situations and act quickly and effectively.

A revolution based on quality and customer service began sweeping through private industry. Companies like Corning Glass, GM, Motorola, and Xerox began shifting their organizational structures from centralized control and hierarchy to trimmer, flatter management structures and greater employee participation. As more and more companies moved to form high-performance work organizations, they discovered that the knowledge and creativity of their employees was often the margin of difference between mediocrity and excellence.

There is no question that the engines that drove this high-performance quality revolution were the principles of employee empowerment and labor-management partnership.

Employee empowerment rests on a simple but powerful idea: the people who are closest to the work know where the problems are and usually have the best solutions. Not all good ideas flow from the top down. When front-line workers are trusted to identify and correct problems, and when their decisions are supported by top management, they will be motivated to make continuing and meaningful improvements to the work they do. The key is to push decisionmaking down and give workers the authority to think creatively and act independently, but guided all along by the organization's objectives and values.

The other essential feature of the high-performance workplace is a partnership between labor and management. At Saturn, Xerox, Corning, Harley Davidson, Cadillac, Dayton Power and Light and many other unionized companies, the evidence has shown that quality improvement efforts and work restructuring plans will not succeed in any lasting way without the support of unions and the employees they represent.

The evidence is also in that long-term organizational success is bound together inseparably to good relations between labor and management. Companies that were trying to remake themselves in every other area of their operations discovered that business as usual between labor and management was not good enough.

Over time they found that involving the union as a true partner in identifying workplace problems and crafting solutions to those problems was good for shareholders and good for the bottom line. Partnerships led to increased productivity and quality, better customer service, and greater employee satisfaction on the job. The private sector has discovered that it is impossible to build a quality operation by treating employees as costs to be minimized or by denying the legitimacy of labor to participate in basic workplace decisions.

Now this did not exactly come as a surprise to AFGE or its members. As federal employees who believe deeply in government, our members want to participate in positive ways to improve the quality of government service. Time and again we have been frustrated by a sluggish bureaucracy that favors rules and regulations over innovation and results.

For years we have tried to get employees involved in decisions that affect their working lives and improving the way government operates, but we've been told "that's management's job." This attitude was emblematic of everything that was wrong about government. AFGE members know firsthand what it's like to be dedicated, skilled employees trapped in systems that stifled their creativity and made little use of their ideas. We came to understand a long time ago that the civil service system's brand of top-down decisionmaking did not serve the interests of the working men and women we represent.

But just as important, the current structure of the federal civil service is incapable of producing the quality and quantity of services demanded by the public. The challenges of the future cannot be met within the existing framework of centralized control. Neither our members nor the American people are well-served by the status quo.

That is why AFGE has supported President Clinton and Vice President Gore in their efforts to reinvent the government through the ongoing work of the National Performance Review. Reinvention is fundamentally about change. It is about a change in the very culture of the federal government: its habits, its attitudes, its performance.

It is also about a change in the way the American people think about their government. Reinvention means that government is no longer seen as too inflexible, too slow, or too unresponsive. A reinvented government is one that can effectively and efficiently serve the needs of its customers, those millions of citizens who count on the government every day to inspect the food we eat, deliver our Social Security checks on time, safeguard our workplaces, and keep our water clean.

In a welcome break from past reform efforts, this Administration did not see the federal employee as an obstacle on the road to change. They recognized that federal workers are nothing like they are portrayed by the political opportunists, radio talk show blowhards, and other cut-rate demagogues. They're

not lazy or incompetent and they're not satisfied just going through the motions. The NPR discovered what AFGE has known for years: federal employees work hard, they're smart, and they want to be freed from inflexible, archaic rules and empowered to do the job the right way.

AFGE has a new vision for federal service that speaks directly to the urgent need for change. In the new government workplace, we believe that front-line workers must be empowered to participate meaningfully in workplace decisions, and must be free to do the right thing, rather than compelled to do the prescribed thing. We believe as well that in the new government workplace labor and management have a shared interest in the success of any agency operations, and must work together as full partners to make the government work better for the American taxpayer. If the government is serious about recapturing the trust and respect of the American people, it must discard the inflexible and discredited management practices of the current civil service system in favor of the high-performance, high-value practices adopted by more and more of the Nation's most successful private and public organizations.

At the heart of this transformation to a high-performance organization is the creation of labor-management partnerships. President Clinton confirmed this when he signed Executive Order 12871 in 1993 and called for a "new partnership" between federal labor unions and management to achieve the goals of reinvention.

This represents an extraordinary milestone in the history of labor relations in this country. For the first time, the federal government's Chief Executive has recognized that there is a meaningful role for federal workers and their unions in the day-to-day operations of the government. And for the first time, it was acknowledged that government-wide reform efforts will fail without the full and active participation of labor unions and the employees they represent.

Partnership offers a way for labor and management to work together identifying problems and crafting innovative solutions in accordance with the shared goals of productivity, efficiency, and quality customer service. In this way, we believe that partnership can bring about dramatic improvements in government performance. And perhaps most important, partnership is not tied to one political party nor is it rooted in any particular ideology. As we see it, partnership is a practical, bottom-line response to the public demand for a more responsive, effective government.

And we have been seeing practical, bottom-line results across the government since the Executive Order was signed. Let me share just a few examples with you:

♦ As a result of employee and union-led initiatives, the Social Security Administration (SSA) was recently cited by a leading financial news publisher as having the best toll-free customer service in America. Dalbar Financial News Services reported in its

publication entitled World Class Benchmarks that SSA employees ranked first in courtesy, efficiency, and knowledge, beating out such top-flight companies as LL Bean, Nordstrom, and Disney.

♦ At the VA Medical Center in Des Moines, self-managed work teams established through partnership have slashed annual overtime costs from thousands of dollars down to zero. These same teams have also cut in half the amount of time veterans have to wait for treatment at the hospital.

♦ At another VA hospital in Albuquerque, the local AFGE union and management have jointly designed several new clinical programs, including a new drug-rehabilitation center, a pain-management clinic, and a women's clinic. Other quality improvements designed jointly by labor and management have reduced the waiting time for patient care from 4 hours to 30 minutes.

♦ By jointly designing new work systems and using self-directed work teams, AFGE and management at the Naval Warfare Center in Indiana were able to eliminate 150 mid-level management positions, saving the taxpayers a bundle in the process.

♦ At the U.S Mint, employee-led work teams reinvented work systems and introduced new work procedures to an organization that delivered only 50% of its orders in 8 weeks. Now, as a result of

the changes made be the agency's own front-line workers, the Mint ships better than 92% of its orders in only 4 weeks.

These are just some of the ways in which labor-management partnerships have invigorated the federal workplace, investing it with fresh ideas and a new spirit. Partnership is enabling the government to better serve the taxpayer while, in many cases, also cutting operating costs.

Now, are we seeing results like these everywhere across the government? No, we are not there yet. But remember, the federal government employs some two million men and women and well over half of them are represented by a labor union. This is organizational change on an unprecedented scale. In effect what we now have is the largest living laboratory for the study of labor-management cooperation in the history of this country. Moving away from conflict and toward partnership will mean that attitudes will have to be transformed, old habits will have to be replaced by new ideas, and the labor relations culture itself will have to undergo real and wrenching changes.

And as anyone who has gone through the process of organizational change will tell you, it is not easy. It takes time and patience. It takes a serious, sustained commitment at every level in the organization. And even with all that, there is no guarantee that you will succeed.

People resist change, and we are seeing that now. Change is threatening. People at the top feel threatened by labor-management partnerships and employee empowerment because now they have to give up some of their control and share their decisionmaking authority. Mid-level managers are also threatened, because they've always been in the business of command and control, making sure that things were done by the book. With partnership and the increasing popularity of self-directed work teams, managers will have to be in the facilitation business, working with employees to establish goals jointly and make decisions jointly.

And let's be honest, partnership can be just as threatening to employees and their unions. Many federal employees are used to being told what to do and when to do it. Now they're being asked to make their own decisions and take responsibility for them. Unions have to adapt to this new era of partnership as well. Union leaders must be able to create and articulate a proactive union agenda for organizational change that is based on union values but aligned with jointly developed goals. We have to do more than simply oppose management actions; we have to be willing to offer our own ideas for solving problems and improving the quality of worklife.

At AFGE we have accepted that challenge. We believe that labor and management have a mutual interest in the success of government and a shared responsibility to work for that success. We are not afraid of change. Our members are proud of public

service, and they are willing to fight for the changes that are needed to create a government the American people can point to with the same sense of pride.

Mr. CLINGER. Great. Thank you very much, Mr. Red, we appreciate your participation today.

Mr. SCHIFF. We invited Archbishop Michael Sheehan to testify, I understand he is with his boss this week on the east coast. [Laughter.]

But he indicated he was going to try to send a representative, and I am not sure if he was able to do that. And I do not see anyone identifying themselves that way.

So let me go on and say we have invited the Sheriff of Bernalillo County, Joe Bowdich, to testify. Former retired deputy chief of police of the Albuquerque Police Department.

Sheriff, you are on for 5 minutes.

STATEMENT OF JOE BOWDICH, SHERIFF, BERNALILLO COUNTY, NM

Mr. BOWDICH. I would like to thank you, Congressmen, and chairman, for this opportunity to come before you. I think that I talk about something that both sides, if you might, or all sides, seem to be interested in—law enforcement. So I will talk in that vein.

We all know Mark Furhman. We have heard that name and everyone can identify him. And that is how we are being judged now. But we do not know a Don Packingham. Don Packingham saved three lives the other day, he did it by talking, spending 2 hours in a room, and he saved the lives of two infants and a distraught young lady. We do not know that.

What I guess I am asking is to make sure that when you judge law enforcement, you do not paint us with the same brush that you paint the bad. We are a good group of individuals dedicated to a profession.

What do we need in changing government? We need support, we need help. We cannot go out there and do it by ourselves and we recognize that. So we are working with citizenry, we are working with the citizens. We govern and we are the symbol of government. We are the ones up front right now, all over. We cannot do it in a community of Albuquerque, we cannot do it in Bernalillo County. We have to do it in cooperation with everyone. I have noticed in the last few months, years, that we do have a lot more support from the feds, and we do appreciate that. And that is why we are asking that you continue to support Federal law enforcement and to support us in law enforcement.

We need their help. None of us can do it alone. We need the input from the citizens, we need the input from the government. But we do not need just laws passed, unmandated—unfunded mandates. Carefully think out those laws and those rules that we have to put up with.

I was very glad to hear that FSLA is going to be applied to Congress. I think that is fair, I think that is only fair. That has been a difficult pill for law enforcement and government in general to accept. And I think you will probably realize why.

And funding, funding coming down. Let us not make it so onerous and difficult. Check, verify that it has been used properly and account for that funding, that is our job and we need to do that. But let us not make it so difficult and the red tape so bad that

agencies are going to start saying no, I will never apply for another grant. I did that once. I walked into an office several years ago and said that is it, no more. Let us streamline those processes.

And I do thank you for this opportunity to come before you and I would like to assure you completely that law enforcement as a rule could be painted with the brush of Don Packingham, who none of you know. And thank you for this opportunity.

[The prepared statement of Mr. Bowdich follows:]

U.S. HOUSE OF REPRESENTATIVES COMMITTEE ON GOVERNMENT REFORM
OVERSIGHT HEARING - "21st CENTURY GOVERNMENT"
OCTOBER 9, 1995

TESTIMONY OF: BERNALILLO COUNTY SHERIFF JOE BOWDICH
"THE FUTURE OF LAW ENFORCEMENT"

CONGRESSMAN SCHIFF, DISTINGUISHED GUESTS ... I AM HONORED TO BE HERE TODAY TO SHARE MY THOUGHTS AND SUGGESTIONS TO IMPROVE AND UPHOLD A PROFESSION I HAVE BEEN INVOLVED IN MOST OF MY LIFE ... LAW ENFORCEMENT ... I AM WELL AWARE THAT MANY OF US ARE QUESTIONING WHERE WE ARE GOING ... WITH ALL THE PUBLICITY SURROUNDING THE O.J. SIMPSON CASE -- SPECIFICALLY THAT OF MARK FURHMAN OF THE L.A.P.D. -- NOW IS A MOST APPROPRIATE TIME TO ADDRESS SOME OF THE ISSUES THAT NEED TO BE BROUGHT TO THE FOREFRONT.

NO ONE SPEAKS OF PRIDE AND INTEGRITY MORE THAN THE MEN AND WOMEN WHO ARE DEDICATING THEIR LIVES TO PROTECT AND SERVE ... LET ME ASSURE YOU THAT THE MARK FURHMAN'S IN A DEPARTMENT ARE FEW AND FAR BETWEEN ... MOST OF THE PEOPLE WHO WEAR A BADGE ARE HARD-WORKING, HONEST PEOPLE ... UNFORTUNATELY, WE DON'T HEAR ENOUGH ABOUT THOSE WHO DILIGENTLY DO WHAT THEY ARE SUPPOSED TO DO ... THE TIMES HAVE DICTATED THAT WE SPEAK UP ... BY THAT I MEAN THAT WE, IN LAW ENFORCEMENT, MAY NO LONGER TOLERATE SOCIAL OR HUMAN INJUSTICE ... WHAT THE FUTURE HOLDS FOR US IS THAT WE MUST BE MORE PROFESSIONAL ... EVEN MORE THAN

-more-

WE ARE NOW – ABSOLUTELY ABOVE REPROACH ... AND NOT TOLERATE DISHONESTY IN ANY WAY, SHAPE OR FORM ... YES, I REALIZE THAT THIS IS AN IDEALISTIC GOAL – AFTER ALL, WE ARE ONLY HUMAN ... BUT IT IS IMPERATIVE TO MAINTAIN THE TRUST THAT AMERICAN CITIZENS HAVE PLACED IN THE OFFICERS WHO COME TO HELP US IN TIMES OF NEED AND DESPERATION ... WE IN LAW ENFORCEMENT ARE THE ONES YOU RELY ON ... WE MUST BE DESERVING OF THAT TRUST.

THERE ARE MANY REASONS WHY WE MUST HOLD TO THIS IDEALISTIC VALUE ... FIRST AND FOREMOST IS THAT TRUST ... THE CITIZENS AND COURTS MUST BE ABLE TO TRUST LAW ENFORCEMENT ... THAT GOES FOR EVERYONE, REGARDLESS OF SOCIO-ECONOMIC STATUS ... ONE OF THE SOLUTIONS IS TO TAKE THE "MUST WIN" APPROACH OUT OF THE COURT SYSTEMS ... WE HAVE LOST SIGHT OF WHAT JUSTICE AND TRUTH STAND FOR BECAUSE WE HAVE BEEN SIDETRACKED BY EGOS. THE JUDICIAL SYSTEM MUST BE REFORMED OR STREAMLINED ... RIGHT NOW IT'S NOT PRACTICAL AND JUST PLAIN CUMBERSOME.

MANY OF THE PROBLEMS THAT LAW ENFORCEMENT FACES TODAY ARE NOT CREATED BY LAW ENFORCEMENT, HOWEVER, WE DO ACCEPT THE RESPONSIBILITY ... SOCIO-ECONOMIC CONDITIONS ALL TOO OFTEN HAVE A PROFOUND EFFECT ON PEOPLE ... WE NEED TO LOOK AT THOSE AREAS WHERE WE CAN HELP WITH LAW ENFORCEMENT SOLUTIONS ... WE ARE HEADED IN THAT DIRECTION ... THAT'S WHAT COMMUNITY POLICING IS ALL ABOUT ... WE IN THE LAW ENFORCEMENT PROFESSION HAVE SAID THAT WE CANNOT DO OUR JOBS ALONE ... IT TAKES COMMUNITY INVOLVEMENT ... WE WILL CONTINUE TO FORM COALITIONS

-more-

WITH THE PUBLIC SECTOR TO JOINTLY SOLVE PROBLEMS ... WHAT WE NEED FROM THE FEDERAL GOVERNMENT IS BACK-UP ... CERTAINLY WE GET SOME OF THAT NOW ... BUT IT MUST BE BACK-UP IN A BROADER SENSE ... (EXAMPLE).

FORTUNATELY WE ARE NOT LOOKING TO GOVERNMENT ALONE TO SOLVE OUR PROBLEMS ... IMMENSE STRIDES ARE BEING MADE AT THE NATIONAL LABS TO DEVELOP TECHNOLOGY AND WEAPONRY TO ASSIST POLICE -- WE MUST BE BETTER EQUIPPED THAN THE BAD GUYS. THE FEDERAL GOVERNMENT NEEDS TO CONTINUE ITS SUPPORT OF THE NATIONAL LABS WHO ARE TURNING TO THE PRIVATE SECTOR TO STAY ALIVE NOW THAT DEFENSE BUDGET FUNDING IS DOWN.

ALLOW ME THE OPPORTUNITY TO TALK ABOUT SOME OF MY CONCERNS ... I BELIEVE THAT VICTIMS ARE NOT GETTING A FAIR SHAKE ... WE MUST DO SOMETHING TO INSURE THAT VICTIMS RIGHTS ARE BEING UPHELD ... I THINK THAT CONVICTED CRIMINALS HAVE TO PAY SOME TYPE OF RESTITUTION ... A LARGE PORTION OF THE MONEY A CONVICT MAKES WHILE IN PRISON SHOULD GO TO THE VICTIMS ... MONEY IS NOT THE REAL ISSUE HERE SINCE WE'RE NOT TALKING ABOUT MULTI-MILLION DOLLAR SETTLEMENTS ... MONEY CANNOT COMPENSATE FOR LOSS AND HUMAN SUFFERING ... BUT PERHAPS SOME OF THAT MONEY COULD BE USED FOR COUNSELING TO HELP CORRECT SOME OF THE INJUSTICE ... AND PERHAPS THE OFFENDER WOULD GET THE MESSAGE.

IT'S TIME THAT WE START OPERATING PRISONS LIKE PRISONS ... IT IS REPREHENSIBLE TO ME THAT OUR PRISONERS ARE GETTING BETTER

-more-

TREATMENT WHILE INCARCERATED THAN MANY OF OUR CITIZENS WHO CAN'T GET THREE SQUARES A DAY, A FREE EDUCATION, AND GYM WORKOUTS TO STAY PHYSICALLY FIT ... WE NEED TO TAKE A LONG, HARD LOOK AT WHAT'S GOING ON HERE.

ALTHOUGH LAW ENFORCEMENT INHERENTLY DEALS WITH A DARK SIDE OF LIFE I HOPE MANY OF YOU NEVER HAVE TO SEE ... THERE IS AN UP SIDE ... I ENVISION A FUTURE WHERE POLICE OFFICERS WILL BE ABLE TO DO THEIR JOBS BETTER WITH COMPUTERIZATION ... THERE WILL BE LESS PAPERWORK AND IT WILL BE MUCH EASIER TO ACCESS FINGERPRINTS, PHOTOS AND RECORDS ... THAT WILL ALLOW OFFICERS TO SPEND MORE TIME ON THE STREETS ... THAT IN TURN WILL MEAN THAT WE WILL BE ABLE TO DEVOTE MORE TIME AND ATTENTION TO OUR YOUNG PEOPLE ... I ALSO THINK THAT THERE IS SOME PROGRESS BEING MADE IN THE AREA OF SUBSTANCE ABUSE ... PROGRAMS SUCH AS D.A.R.E. AND G.R.E.A.T. ARE HAVING A POSITIVE IMPACT ON OUR CHILDREN BEFORE THEY REACH THOSE TEENAGED YEARS WHEN IT IS TO LATE TO TURN THEM AROUND.

IN CLOSING LET ME SAY THAT I INTEND TO BE A PART OF THE SOLUTION RATHER THAN THE PROBLEM ... IT IS MY INTENT TODAY TO BRING ABOUT SOME IDEAS THAT I HOPE WILL SERVE TO PROMOTE ACTION. THANK YOU FOR YOUR TIME.

Mr. CLINGER. Thank you very much, Sheriff. I would hope to give you some measure of comfort in that one of the things that I think this committee is proudest of having seen enacted into law that came out of our committee was the Unfunded Mandates Reform Act, which limits the Federal Government's ability to pass an unfunded mandate on to State and local governments without really assessing what the cost of that mandate was going to be, and providing the resources for that mandate. So we are trying to be responsive to the concern you expressed.

Also, I think you are absolutely right that we are going to find out come January 1 just what we have wrought on all of you when it is going to be applied to us. I think we are going to have a rude awakening to something we probably should have had a rude awakening to much earlier in our careers.

Any other questions?

Mr. HORN. Just one question. Sheriff, are you familiar with the National Institute of Corrections?

Mr. BOWDICH. Vaguely. I do not have responsibility for a jail, so I do not——

Mr. HORN. Oh, OK, because they have been very helpful to sheriffs on jails. So that was what I was curious if you had found them helpful.

Mr. BOWDICH. I have not, but in this county, we have a Corrections Bureau, which is funded jointly with the city and the State or the county, but I do think that is really an area we need to look at. The Maricopa County Sheriff has some solutions that I think might work. It is reprehensible that we have people starving to death and the poor with us still out there and yet we are paying more to take a criminal, get them three squares a day, good lodgings and free education. We could use that money somewhere else.

Mr. HORN. Well, thank you.

Mr. CLINGER. Thank you very much, Sheriff, we appreciate your presence.

Mr. SCHIFF. Mr. Chairman, in another life, I spent more than 20 years in the New Mexico Air National Guard and know the importance of the National Guard to all of our States, and so would like to invite General Mel Montano, the Adjutant General of New Mexico for 5 minutes testimony.

Mr. CLINGER. Welcome, General.

STATEMENT OF GENERAL MEL MONTANO, NEW MEXICO ADJUTANT GENERAL

General MONTANO. Good afternoon, chairman, gentlemen. It is a privilege to be here.

A couple of issues I will bring up. First of all, in my business I do hear a lot of confessions, so if there are any questions I can answer on behalf of the Archbishop, I will try to do that. [Laughter.]

Mr. SCHIFF. If I can interrupt you, General, for almost 15—well, no, not that long—for about 12 of those 20 years, I was the legal officer in our unit and we shared an office with the chaplain because we figured someone who needs to see one probably needs to see the other, so one-stop shopping.

General MONTANO. As you know, being Adjutant General of this State is kind of a hybrid position. We perform the function of both

State and Federal. I am not going to go into redundant statements about the attributes of the National Guard, I am sure you have all heard that. We are the best bang for the buck, I believe, and we can do it as well, sometimes even better than the active forces.

I will first tell you a little bit of what I encountered being appointed as the Adjutant General of the State of New Mexico. We had the things similar to what Secretary Heather Wilson encountered. We had a value problem. I sat down with my commanders and established the base, foundation as I call it, ethics base. We are going to get back to accountability, responsibility and take the bull by the horns and do things the right way.

We found out we had a communications problem, which is critical, as the Secretary mentioned, it is very, very critical. As a matter of fact you will find out that the two things I am going to talk about are finances and communication, and I think those are the things that usually wreck a marriage. It is all basic, it is all natural, it is all down to earth, and those are the things that we are trying to put together.

I found out I head a leadership problem, everybody was pawning off leadership to the next person, to the next level. Leadership is individual and as you all know, leadership is making a happening. Anybody can be a leader, it is not rank oriented. Some people migrate to the lowest person on the totem pole and that is the leader, and we are trying to establish that you have got to get in there, you have got to lead and again, that goes back to the basic foundation I am talking about, the basic values of life and the ethics that I am talking about.

Now getting down to what I would really like to discuss with you concerning what my concerns are, and it is budget. In a declining budget, both State and Federal, and particularly in the hybrid position that I mentioned I am in, my budget is usually established on a baseline under the Federal budget. I accept that or I justify anything above the baseline and then it is up to me to execute and of course protect that budget. Much the same with the State budget.

My problem with the budget is the planning of the budget and how it is given to us. I would advocate at the Federal level that you all try to take a look at multi-year funding instead of singular year funding. It is particularly a problem in a year where you go into a CRA as we are today. If you remember, I think it was either last year or the year before we were almost three quarters of the year into a continuing resolution authority, we did not have an approved budget.

Let me give you a problem concerning contracts and execution of that budget. If you have a CRA that takes us past the middle of the year and you try to go out and establish contracts, large contracts, you have a problem because the contract process is that you will establish the contract, you will go out on bids, you have to advertise, et cetera, it is a time phased situation. By the time you get to the point of execution, if we do not have a budget and not enough time left in the year, we cannot execute those funds and we lose it. We cannot plan beyond 1 year and that causes us a problem. Now there is nothing foreign for Congress to go out on a multi-year budget, you did it for all our contracts and all our support in Europe, internationally, so it is not a foreign concept. I

would just suggest the way budgets are planned today, the negotiations that take place between the parties, if you will, and the issues that come up concerning putting a budget together, that you really, really take a real close look at multi-year funding of our budget. I think it would help everybody concerned, I think it would protect waste because you would not have people trying to spend budgets within 1 year in order to execute them so that their base the following year is not affected. And I think you would realize a savings as well as better planning and probably better execution of our budget.

The next thing I would like to talk about—and I am running out of time—is trust in government, and the one issue I would mention there is the veterans' issue. I understand there are people going back and looking on what I call breaking of the contract with the veterans and trying to take some of the benefits away because of the problems we are having with funding and with the budget. I would just remind you that when we have to protect our freedom—and we have to do that every generation—we take our finest, our brightest and our best, and sometimes you have to throw them in harm's way, and if you brought them into the service in order to perform that function and established a contract on benefits, I would suggest to maintain the trust in government and to maintain the contract with the veterans, uphold the contract that was made in order for them to protect the freedoms that we hold so closely to ourselves.

It has been a privilege to be before you, I thank you very much for the opportunity.

Mr. CLINGER. Thank you, General, very much, appreciate that.

General MONTANO. No questions?

Mr. CLINGER. I think you have some very strong advocates in the Congress on that latter point. Duke Cunningham, who is a former career top gun has made the case very strongly that to undercut the promise would really undercut our ability to defend the country.

Mr. SCHIFF. Even though he is Navy.

Mr. CLINGER. Even though he is Navy, that is right.

Mr. SCHIFF. Thank you, General.

General MONTANO. You are welcome.

Mr. SCHIFF. I have the honor to have a constituent who is—I am sorry, were there any questions? I beg your pardon.

Mr. SHADEGG. I really did not have any questions, I simply wanted to state that I spent my 6 years in the Arizona Air National Guard and enjoyed it thoroughly.

General MONTANO. What unit?

Mr. SHADEGG. 162nd Tactical Fighter Training Group.

General MONTANO. Well.

Mr. SHADEGG. I was not in the JAG, I got my law degree after that, but I like your idea of one-stop shopping.

Mr. CLINGER. That is a good idea. Thank you, General.

General MONTANO. Thank you very much.

Mr. SCHIFF. I have the honor to have as a constituent, the recently elected president of the American Bar Association, Roberto Cooper Ramo. President Ramo, you are welcome to come up and address us for 5 minutes.

Mr. CLINGER. Congratulations.

STATEMENT OF ROBERTO COOPER RAMO, PRESIDENT, AMERICAN BAR ASSOCIATION

Ms. RAMO. Thank you very much. It is an honor to be here.

I can only say as a New Mexican that my heart is broken that all four of you are meeting in here instead of outside. I hope you had a chance to at least see the balloons, the sky is fabulous.

Mr. CLINGER. We did.

Ms. RAMO. I have often thought as I have been in Washington that it would be a wonderful thing if there were more hearings outside in the open air of New Mexico to give all of us some perspective about this.

Mr. Chair and honored Congressmen, first of all, let me tell you on behalf of the ABA, that I enormously comment the effort of this subcommittee in looking in a serious way at government and figuring out how we have the most powerful government for the dollars to face the 21st century. I think all Americans will be well served at a time in which we are not only in a global economy which we clearly are, but also beginning a kind of global society that is very different because of instantaneous communications and a lot of technologic things about which I know you are very well informed. It makes a great deal of sense to me that you all in a thoughtful way are exploring all of those issues and hearing from a lot of sides. These are decisions I think that should not be made quickly but have to be made and have to be looked at and I am very grateful at the tone of the questions and the whole way the committee is going about this makes a good deal of sense to me.

The public of course demands that you do this. It is good government and I think it is good national policy for a strong United States of America.

At the ABA, just like you, we are also exploring these very issues, and I wanted simply to make you aware of some of the things that we are doing that, as they come to fruition, I hope will be of help to you.

First of all, we have a section of urban, State and local government at the American Bar Association, and they have created recently a task force on Federalization, which is seeking to address the issue of State sovereignty and the role of the Federal Government, and we hope that their findings will be very helpful to your subcommittee in going forward as they complete their very serious studies. I must say as a matter of kind of local interest possibly, but New Mexico and some of your States, is really a State of small businesses, and the tax section of the ABA along with other entities in the American Bar Association that deal with pensions have, for years, provided a series of suggestions to both the Congress, to the Internal Revenue Service and the Department of Treasury to try to streamline in many ways since the passage of ERISA in 1974, the way that the Federal Government deals with the whole pension area. There just is not any question in my own experience as an attorney in New Mexico, where I basically represent small business and I tell you this as a personal matter, that what has happened is that the enormous increase in the kinds of filings and the difficulties of filings in the pension areas had the exact reverse

effect that I think we wanted, that it has discouraged small businesses from being actively involved in the pension area. Instead of encouraging them to undertake pensions, and at a time when social security is under so much enormous concern to all of us, I think one of the areas in which I hope you will explore and which I think the ABA tax people and the people who really are expert in this area would be happy to offer their assistance is in looking at the kinds of responsibilities that we put on small businesses in the tax area. Not necessarily because they want to pay less taxes even, but because of the kind of bureaucratic forms that have to be filed are so enormous, and the change, the rate of change in very complicated statutes, makes an enormous problem. I have often thought in my private practice it is sort of like the weather report sometimes since 1974, we needed to be able to call the Federal Government to get the Tax Code of the day. And in an economic system in which one has to plan to be successful, this is the kind of problem that I think needs addressing in a serious fashion and I hope you look at it. And I want to tell you that the people in the ABA who are expert in this area would be happy to be of service to you if that would be of help.

Our association believes that State laws have functioned generally well and that it is unnecessary often, and inappropriate, to Federalize them. For example, Federalizing State crime only adds duplicative layer of authority at the Federal level, often creates potential conflicts between State and Federal law enforcement authority and requires greater fiscal resources and grants of authority to Federal law enforcement agencies which may not be the most appropriate trend now and possibly even in the past.

On the other hand, in deciding what programs should be eliminated, we have to be very careful that we look at the role of government, and in particular a Federal Government, in ensuring that our whole country has an appropriate system of justice. The first specific function that is mentioned in the preamble to the Constitution is to establish justice as a Federal requirement. And it is very important to us as an association, and I think to all Americans, that that be the first priority of the Congress and all that we do in that area.

The inscription over the U.S. Supreme Court, I know you all know, reads "Equal justice under the law." And that is equal justice not just in Albuquerque or Sante Fe or New Mexico or Arizona, but in every community and every State across the whole United States. It is for this reason, among others, that we have as an association so vigorously supported the Legal Services Corporation of America. And I want to express my gratitude to Representative Schiff for his leadership and help in this area. It has been a very successful program, we think, in exactly the terms that you are talking about; that is, as being a rather efficient program and one in which I hope there has been the perfect public/private partnership; that is, the private part has been for free. And I would like to encourage you all to look at more programs in fact in which the public/private partnership works very much like that has.

Let me note that concern with crime in recent years has led Congress to expand the scope of Federal criminal law jurisdiction, as I said, over crimes that have previously been handled at the State

level. And this is a matter of some concern because of resource allocation, to people in the American Bar Association.

There are practical policy reasons, we think, for concern with Federalization. The Federal Government clearly has an important role to play in providing national leadership on crime and criminal policy and criminal justice. But turning the Federal courts into national police courts with our Federal judges already so overwhelmed by criminal cases that they are virtually unable to try vital civil cases, is a very serious mistake, in our view.

The more than 29,000 State judges are much more able to deal with street crime than the less than 900 Federal judges, who should focus on complex interstate criminal activity.

Chief Justice Rehnquist stated in a speech before the American Bar Association several years ago that Federalization of State crimes, this is quote from him, "threatens to swamp Federal prosecutors, thus interfering with other Federal criminal prosecutions and would ensure that the already overburdened Federal courts would not and could not provide a timely forum for civil cases." Let me note as an aside that in our State, as in several of yours because we are a border State, our own Federal courts are enormously overwhelmed with drug cases that makes it very difficult for them to do the kind of thoughtful quick job in civil cases that I know they would like to do, and so I think there needs to be particular understanding of those Federal courts round our country that have unusual situations, as many of the border States do.

I want to tell you that the ABA in 1991, joined the S Judicial Conference in opposing legislation along this line that would have Federalized virtually all State crimes committed with a gun. Our criminal justice section is putting together a task force to study this issue and, Representative Schiff, with your permission when they finish with their ideas and their thoughts, I would like to forward it to you for any use that it might be to the Congress in this regard.

Mr. SCHIFF. I must say you have not asked my permission before, you just forwarded it. [Laughter.]

So I look forward to receiving it.

Ms. RAMO. Well, it will be my pleasure, sir, to honor your request in this case.

Let me just say that I think it is important, in summary really, that—I want to say a word about emphasis. I have had a chance recently, as I know Congressman Schiff knows, to be in some countries recently which are not so supportive of freedom of speech and democratic ideals and I have been in another country recently which is Great Britain, which really was the founder of a lot of our ideas, but we have improved in many ways upon them. And I think it is very important that in doing your work, you make sure that what you are doing is not a change in basic emphasis. The Federal Government, in my lifetime and I suspect in the lifetime of many of our citizens, has done a lot that is very good and very important. And I am often struck more when I am away from the United States than when I am here, that we do not take enough time to talk about those things that have been great about our country, great about our government. It is quite appropriate for the Federal Government to act in certain ways in which national policy is enor-

mously important, in cases in which there have been past discrimination, for example, that needs to be remedied on a national basis; in dealing with defense and other things that are simply national priorities, and in helping to set those sorts of standards. I was interested in fact by your comment about a national science position. I think basic research is an area in which we have a vital defense interest and a vital economic interest and I think we need to be thoughtful about not just deciding, as an emotional matter—and I know that Congress would not do this—that somehow the Federal Government is bad because we have too many instances in our Nation's history in which that is not the case.

Mr. SCHIFF. Ms. Ramo, I hate to interrupt, but I have to ask you to—we are reaching or time constraint.

Ms. RAMO. Let me just say that I am appreciative of the opportunity to be here, I think that it is very important as you do your deliberations that you remember the pledge of allegiance in which we start out by saying "one Nation," that is what we are and I think it has been a good thing for us to do those Federal things in which our entire Nation's interest is at stake. Thank you very much.

Mr. CLINGER. Thank you very much.

Mr. SCHIFF. Let me add that if you have not so and you choose to do so, the chairman has allowed the record to stay open until Friday, so anything we receive in our office by Friday in writing we will submit along with the record.

Ms. RAMO. I will be delighted to try to do that, I appreciate the opportunity. Thank you all.

Mr. SCHIFF. And at this time, Mr. Chairman, we have from the Associated General Contractors of America, Mr. Mark Henderson. Mr. Henderson.

STATEMENT OF MARK HENDERSON, PRESIDENT, NEW MEXICO BRANCH OF ASSOCIATED GENERAL CONTRACTORS

Mr. HENDERSON. Thank you.

Good afternoon, Mr. Chairman and subcommittee. I want to try to briefen up my program a little bit. I think probably I admire your project in front of you more than I can say. Running a small business is very difficult and trying to downsize one from a large organization like the U.S. Government is just mind-boggling.

I would like to offer that the Associated General Contractors is very much in support and would like to offer any assistance that we can. We feel like we are living in an environment where we are literally building America. We are building the roads, we are building the infrastructure, we are renovating the buildings and one message that comes clear to us on every project that we bid—and we are living on margins of 1.5 percent—competition is very, very keen.

The message we hear is faster, better, cheaper. That is what we have to live by. And I am very proud to say I am part of an industry that is able to meet that request. We are building the Intels, we are building the Texas Instruments, we are building the government facilities, if you will, and all of those areas we feel like we are having measures of success.

We feel like we could help in whatever way and again, time does not allow me to be as specific as I would like to be, but we feel like we have got some very viable programs that we could help with.

Anyway, if there are any questions, I would be glad to answer them.

[The prepared statement of Mr. Henderson follows:]

TESTIMONY OF MARK HENDERSON
PRESIDENT, NEW MEXICO BUILDING BRANCH, AGC

GOOD MORNING MR. CHAIRMAN (AND MEMBERS OF THE SUBCOMMITTEE), MY NAME IS MARK HENDERSON AND I AM PRESIDENT OF HENDERSON CONSTRUCTION AND THE NEW MEXICO BUILDING BRANCH OF THE ASSOCIATED GENERAL CONTRACTORS. I AM VERY PLEASED TO APPEAR BEFORE YOU TODAY AND SHARE SOME THOUGHTS ON THE ISSUE OF GOVERNMENT DOWNSIZING.

MR. CHAIRMAN, I AND THE MEMBERS OF OUR ASSOCIATION APPLAUD YOU FOR EXAMINING THIS ISSUE AND WE OFFER NOT ONLY OUR ASSISTANCE IN PROVIDING YOU WITH IDEAS, BUT ALSO OUR ENCOURAGEMENT. WE SINCERELY HOPE THAT YOU ARE SUCCESSFUL IN THIS ENDEAVOR.

AS THE CONGRESS TACKLES THE DIFFICULT YET NECESSARY TASK OF BALANCING THE FEDERAL BUDGET, IT IS CLEARLY APPROPRIATE THAT YOU TAKE A LONG AND MEASURED LOOK AT THE PERSONNEL, EFFICIENCY AND PRODUCTIVITY OF GOVERNMENT AGENCIES. IN THE PAST FEW YEARS, PRIVATE SECTOR EMPLOYERS HAVE FOUND IT NECESSARY TO EVALUATE THEIR MISSION AND OBJECTIVES TO DETERMINE WHETHER THEIR CORPORATE STRUCTURE PROVIDED GOODS AND SERVICES IN THE MOST EFFECTIVE AND COST EFFICIENT MANNER. WHILE THESE EFFORTS RESULT IN SHORT-TERM PAIN FOR THE EMPLOYEES WHO ARE AFFECTED, IT IS GENERALLY UNDERSTOOD THAT THE CONSUMER AND THE INVESTOR BENEFIT FROM MANAGEMENT PRACTICES DESIGNED TO ENHANCE COMPETITIVENESS BY ELIMINATING WASTE.

AT THE SAME TIME, IT IS CLEAR THAT THE PUBLIC IS DEMANDING THIS SAME TYPE OF EVALUATION FROM THEIR GOVERNMENT--WHETHER IT IS THE FEDERAL GOVERNMENT OR THE LOCAL SCHOOL BOARD. IN A TIME WHEN NUMEROUS LEGITIMATE INTERESTS COMPETE FOR A DECREASING AMOUNT OF AVAILABLE FUNDS, IT IS INCUMBENT UPON GOVERNMENT TO PROVIDE NECESSARY SERVICES IN THE MOST COST EFFECTIVE MEANS AVAILABLE.

THE EXTREMELY COMPETITIVE NATURE OF THE CONSTRUCTION INDUSTRY, WHERE THE LOW BID GENERALLY SEPARATES WINNERS FROM LOSERS, DEMONSTRATES JUST HOW CRITICAL EFFICIENCY AND ECONOMY ARE TO SURVIVAL. IN AN INDUSTRY WHERE THE AVERAGE PROFIT MARGIN IS AROUND 1.5 PERCENT, THERE IS NO ROOM FOR UNNECESSARY OVERHEAD. CONTRACTORS ARE CONSTANTLY CHALLENGED TO TRIM COSTS, MANAGE TIME AND RESOURCES WISELY, AND KEEP AN UNWAVERING EYE ON THE BOTTOM LINE. IT IS AN UNFORTUNATE BUT HONEST FACT THAT THERE ARE NUMEROUS FORMER CONTRACTORS OUT THERE WHOSE COMPETITORS DID A BETTER JOB OF PERFORMING THIS BALANCING ACT.

RAZOR THIN--AND SOMETIMES NONEXISTENT--PROFIT MARGINS REQUIRE THAT CONSTRUCTION EMPLOYERS GROW THEIR WORKFORCE SLOWLY AND CAREFULLY. AS A RESULT, THE UTILIZATION OF TEMPORARY, PART-TIME AND SEASONAL EMPLOYEES IS AN INDUSTRY NORM. EMPLOYEES IN THE CONSTRUCTION INDUSTRY--WHETHER THEY ARE HOURLY CRAFT WORKERS OR SALARIED PROJECT SUPERINTENDENTS--GENERALLY RECOGNIZE THAT THEY

HAVE JOBS ONLY AS LONG AS THE CONTRACTOR CAN SUCCESSFULLY COMPETE FOR WORK. OBVIOUSLY, THIS FACT PROVIDES CHALLENGES TO ALL CONSTRUCTION EMPLOYERS IN THE RECRUITMENT AND RETENTION OF WORKERS IN AN INDUSTRY THAT CANNOT PROMISE JOB SECURITY. MANY CONTRACTORS HAVE EXPERIENCED CHAGRIN IN SEEING THEIR BETTER EMPLOYEES GO TO WORK FOR COMPETITORS WHEN WORK SLOWS DOWN.

SUCCESSFUL CONTRACTORS KNOW THAT THEY NEED TO DEMAND MUCH FROM ALL OF THEIR WORKERS AND THEIR WORKERS KNOW THAT MUCH IS DEMANDED. TEAMWORK, INNOVATION, FLEXIBILITY, AND POSITIVE ATTITUDES ARE REQUIRED IN THE HOME OFFICE, THE JOBSITE TRAILER, AND ON THE WORKSITE ITSELF. AGAIN, CONTRACTORS WHO THRIVE IN THIS COMPETITIVE CLIMATE GENERALLY DO MORE WITH LESS. AS A RESULT, DOWNSIZING IN THE INDUSTRY IS NOT AS DISRUPTIVE AS IT MAY BE IN OTHER INDUSTRIES BECAUSE CONSTRUCTION EMPLOYERS DO NOT GET INTO A POSITION WHERE THEY ARE TOLERATING THE LUXURIES OF LAYERED MANAGEMENT OR DEPARTMENTS WITH OVERLAPPING FUNCTIONS. THE EXACT TIME DEADLINES FOR SUBMITTING BIDS AND FOR DELIVERING THE PROJECT WHEN PROMISED DEMAND THAT MANAGEMENT DECISIONS MUST BE MADE QUICKLY. THUS, A CONSTRUCTION COMPANY'S ORGANIZATIONAL CHART TYPICALLY IS DOMINATED BY A SHORT, STRAIGHT LINE.

MANY OBSERVERS WOULD ARGUE THAT THE FACT THAT GOVERNMENT HAS NO ECONOMIC COMPETITORS HAS REMOVED ANY INCENTIVE TO DELIVER ITS PRODUCTS IN A FASHION THAT MIRRORS THE MANNER IN WHICH THE PRIVATE SECTOR DELIVERS ITS PRODUCTS. HOWEVER, WHILE IT MAY BE FASHIONABLE TODAY TO CRITICIZE GOVERNMENT AND BASH BUREAUCRATS, I THINK WE ALL CAN AGREE THAT THERE HAVE BEEN WELL-INTENTIONED EFFORTS IN THE PAST TO STREAMLINE GOVERNMENT USING THE EXPERIENCES OF THE PRIVATE SECTOR AS A MODEL. THOUGHTFUL AND HONEST EVALUATIONS THAT IDENTIFY OVERLAP AND UNNECESSARY LEVELS OF STUDY THAT PROMOTE DECISION DEFERRING RATHER THAN DECISION MAKING IS A CONTINUING PROCESS FOR GOOD COMPANIES. SO ALSO SHOULD IT BE A CONTINUING PROCESS FOR GOOD GOVERNMENT. CUSTOMERS WHO ARE NOT GETTING THEIR MONEY'S WORTH HAVE THE LUXURY OF FINDING ANOTHER SUPPLIER OR PROVIDER. TAXPAYERS WHO ARE NOT GETTING THEIR MONEY'S WORTH ONLY LOSE CONFIDENCE IN THEIR GOVERNMENT AND ITS OFFICIALS.

WHILE THE CONSTRUCTION INDUSTRY MAY NOT BE THE PERFECT MODEL FOR COMPARISON, WE WOULD OFFER THAT THERE ARE LESSONS IN THE WAY WE OPERATE THAT ARE TRANSFERRABLE TO THE PUBLIC SECTOR. I WOULD BE REMISS IF I DID NOT REMIND THIS COMMITTEE THAT AS YOU CONTINUE TO STUDY THIS ISSUE IT WILL BECOME APPARENT THAT GOVERNMENT SHOULD NOT COMPETE WITH THE PRIVATE SECTOR WHERE THE PRIVATE SECTOR CAN DO THE JOB CHEAPER, BETTER, AND FASTER. CONTRACTING OUT TO THE LOW BIDDER GUARANTEES THAT THE TAXPAYER GETS THE BEST PRICE.

MR. CHAIRMAN, THE NEW MEXICO BUILDING BRANCH OF AGC APPLAUDS YOUR EFFORTS AND WE OFFER ANY ASSISTANCE THAT YOU MAY REQUIRE AS YOU CONTINUE TO STUDY THIS ISSUE. THANK YOU FOR INVITING ME TO BE PART OF THE PROCESS. I WOULD BE HAPPY TO ANSWER ANY QUESTIONS THAT YOU MIGHT HAVE.

Mr. SCHIFF. Mr Henderson, with the chairman's permission, if I could just make the same reminder, that if you wish to submit an additional portion of the statement in writing to my office by Friday, it will be accepted.

Mr. HENDERSON. Thank you.

Mr. CLINGER. Thank you very much.

We are going to conclude this portion. Most of us are going to have to go catch an earlier plane. Congressman Schiff is coming back to Washington a little later in the afternoon, and so he has agreed to remain and to conclude the hearing after those of you who have not had an opportunity to express your views would have an opportunity to do so, and they will become, as Congressman Schiff has indicated, a part of the record.

Before I leave, I do want to thank a number of people for their contributions in making this a very, very successful, very productive hearing. Debbie of the Technical Vocational Institute, who handled all of the arrangements here to make us feel very much at home; Lori Parrott of the Sandia Microelectronics Development Lab where we visited yesterday, and had a very interesting tour. Mary Martinek of Congressman Schiff's staff, for all the hard work that they put in in preparing for this very, very important hearing.

And with that——

Mr. SCHIFF. Mr. Chairman, just before you depart, I just again want to thank you for the honor you have given us by holding this committee meeting here. I want to thank my colleagues from California and Arizona for being here. And I have to say my plane is not—we all have to be in Washington tomorrow and my plane does not follow yours by that much and I do not know that I can get to everybody who wants to make a statement, but three people have come up to me who I am going to recognize and I will get as far as I can.

But thank you for allowing me to keep the record open so we can continue to receive testimony from New Mexicans.

Mr. CLINGER. So with that, Mr. Vice Chairman, I will turn the gavel over to you to conclude the hearing. Thank you very much. [Applause.]

Mr. SCHIFF. I would like to recognize for up to 5 minutes, and would not mind if it was 3 or 4 if that is possible—first, Representative Ted Hobbs, State Representative from Bernalillo County.

STATEMENT OF TED HOBBS, STATE REPRESENTATIVE, BERNALILLO COUNTY

Mr. HOBBS. Thank you, Mr. Chairman and I guess member of the committee.

Mr. SCHIFF. And once again, Ted, you know this, but just to stress, the record is ongoing, so the record is the same even though there is some comings and going here necessary of members. So please be assured of that. Please go ahead.

Mr. HOBBS. Very good. And I appreciate you giving me the time. I did not come here with the idea of talking, I came here as a freshman State legislator wanting to learn now the experts at the Federal level handle committee meetings like this. And the thing I learned as I watched was that all the testimony you have heard and the way the special interests are putting information in front

of you, if I could have a copy of that record, I am going to be listening to that many times, the same people talk to us with the same issues. And that is what I learned about this.

And the thing that I wanted to get across is, as questions come before you all and as I see it as a newcomer to the State legislature, what happened last November, what the people and the citizens are asking you to do, I think they are still asking us to do, by far the majority of the people in my district want to see a balanced budget, want to see reduced expenditures and want to see less Federal Government interference and more local control.

So as you deal with all of the special interest groups, you cannot handle all the problems and we have got to more and more say to people, almost everything we hear makes sense, it is something we would like to do, there is not enough money. And we have got to keep emphasizing that.

So you have got to look for unique ways to solve the problems. And I just want to quickly thumbnail sketch an announcement that our Governor made about 4 weeks ago, an initiative to address the efficiency of Government, improved Government operations and a way to try to get a new way to address what many States and the Federal Government has done, and that is study this efficiency streamlining activity. He announced that we were going to have a totally, 100 percent, private sector initiative that would bring in executives and professionals from around the State, and we have 60 volunteers who 2 weeks ago spread out among Government departments to see whether or not successful business operations and business practices might be implemented in our State government to see if we can help streamline, look for outmoded programs that ought to go away and just basically see whether or not we can, from a private sector standpoint, with no turf to protect, make the recommendations that would be helpful at the State level.

It has been very well received by all the cabinet departments we are working with. And by the way, I know we had a member of the labor group here. I have a private hotline to which people can address any problems and I have had 30 to 40 State employees call me and make recommendations as well. I discover in looking at the background——

Mr. SCHIFF. I am going to have to ask, Representative, and I apologize, if you could begin to wind it up just because of the time constraint. I mean no rudeness.

Mr. HOBBS. In one sentence, the only point I wanted to make, we discovered there has been a lot of studies, this is the first 100 percent private sector study that has been implemented in the State of New Mexico, as far as I can see.

Thank you very much.

Mr. SCHIFF. Thank you very much for joining us, I appreciate it.

I would like to welcome now Mr. Jay Sorenson, who is a member of many organizations, but who I know as a representative of the Sierra Club.

STATEMENT OF JAY SORENSON, SIERRA CLUB

Mr. SORENSON. Thank you, sir, and we see it as a privilege to be here and wish that the other members of the committee had

been present as well, but understand the need to catch a plane. And I will try to be brief and sum up my remarks.

We have a slightly different——

Mr. SCHIFF. Excuse me, I just have to interrupt just again to point out that the record is being made available to all Members of Congress. Please go ahead.

Mr. SORENSON. First I guess a word about myself. I am a volunteer, I am the chairman of the Sierra Club's National Committee on Federal Facilities Compliance Task Force. I am a member of the Department of Energy's Environmental Management Advisory Board and advise Assistant Secretary Grumbley and Secretary O'Leary. I am also a member of the Laboratories Directors Committee, that is all the laboratories, on Environmental Safety and Health. I am a member of the Western Governors Mixed Waste Working Group. I am a member of the Sandia National Laboratory Citizen Advisory Board and the credentials go on.

The Sierra Club believes that effective external regulation for assuring environment safety and health is essential independent of the ultimate choice of how regulation and oversight are handled. We see a national debate taking place on the question of external regulation and welcome it. We recognize many of the criticisms of the regulatory process are valid and we have some of our own. Lack of compliance and full funding, lack of coherent and consistent regulation, lack of stability and balance in addressing hazards, lack of public credibility, lack of management accountability, lack of simple and effective oversight mechanisms.

We, however, are also concerned that some of the proposed reforms, while well intended, are misguided. We are concerned about efforts to reduce EPA's enforcement budget by 50 percent and attaching riders to Superfund that will make enforcement actions unlikely.

We believe that many of the proposals on risk analysis and cost/benefit analysis will end up being more costly than the continued use of some of the same systems.

We are worried about the appropriations to reduce regulation under the Clean Air Act, the Safe Drinking Water Act and the Endangered Species Act. And we look to James Madison, the fourth President of the United States, the architect of the Constitution and one of the principal drafters, the Federalist Papers, to emphasize the point that we believe is terribly important. Madison basically, in the 51st Essay said that the function of Government was first to protect the people from one another and then to protect them from the Government. He also said, "It is of great importance in republic, not only to guard the society against the oppression of its rulers, but to guard one part of society against the injustice of the other."

And the issue that we would like to underscore is the issue that he was concerned about, and that is concentrated power, unequal bargaining power and the need really for countervailing power. We would like to note that the history of Federal regulation took place largely as a reflection of market failures, and it really begins in 1877 with the creation of the Interstate Commerce Commission, which was the first independent regulatory commission created, and set the structure for external regulation.

The progressive era saw the creation of the Federal Trade Commission; in 1913, the Federal Reserve Bank was created; the first statute was the Sherman Anti-trust Act which focused on monopoly and unfair constitution. The Food and Drug Act was passed in 1890 and 1906 respectively. The 1920's saw much of really what——

Mr. SCHIFF. I hate to interrupt, but I have to ask if you can——

Mr. SORENSON. In a second, please.

So an emphasis on voluntary arrangements, the New Deal ushered in reforms. The 1960's, environmental safety and health reforms, all of these to us indicate really that there is a problem of market failures and there is a need for environment safety and health regulation that is effective. We believe that there are lessons learned and we would like to add the following proposals.

The new regulatory process should adequately protect the public and worker health and safety. Should be stable, predictable and reasonably insulated from political change. Should be flexible and efficient. Should be accountable to the public. Should take into account the entire spectrum of hazards and promote a consistent framework for regulation, including enforcement. Should be transparent and responsive to public and work concern.

The public and workers should have meaningful input, access to information and legal redress.

We hope these suggestions are helpful. We look forward to working with you and again, thank you very much for the opportunity to participate in this hearing.

Thank you.

Mr. SCHIFF. Thank you, Mr. Sorenson. Mr. Joe Rose of the Concord Coalition.

STATEMENT OF JOE ROSE, CONCORD COALITION

Mr. ROSE. Thank you, Congressman.

We have had this chart up here before you in the room all day. That represents a $5 trillion debt, as you are well familiar with. And part of the cost of our Government over the last 50 years and particularly the last 30 years that has added to that enormous debt has been bureaucracy. We have moved from a representative republic form of Government to a represented dependency democracy form of Government. It has taken us about 50 years to do it and the cost of that is reflected in the money we have had to borrow to run the Government and just put it on the tab.

I know you are going to linger for a photo op with me when we are through here.

Mr. SCHIFF. Well certainly.

Mr. ROSE. I am through now.

Mr. SCHIFF. We are just about at the time where I have to close the record. I just have a few more minutes, let me just see if we have any other requests to address the record here. Tony? I would be grateful even if I know you, if we know each other, if you would be kind enough to state your name and any affiliation you want to identify with.

[The prepared statement of Mr. Rose follows:]

October 9, 1995

Honorable Steve Schiff

Committee on Government Reform and Oversight

Albuquerque, N M

Testimony from Joe Rose, State Director, Concord Coalition

Gentlemen:

We in New Mexico commend Representative Steve Schiff and this Committee for your vision and courage to seek ways to streamline our Federal Government for the 21st century.

In the course of a half-century, the United States has moved from a Representative Republic to a Representative Dependency Democracy; highly vunerable to special interests impacting their demands upon the taxpayer and the fiscal soundness of the economy of this Nation to the tune of $5 trillion dollars of accumulated debt,and an enormous expensive Federal Bureaucracy.

The Concord Coalition is in support of the Department of Commerce Dismantlying Act. Over a period of 5 years the American taxpayers will be saved $7.765 billion dollars.

We can make a down payment on our goal of a balanced budget by year 2002.

Recent Congressional efforts to dismantle the Department of Commerce are truly historic, in that no cabinet-level agency has ever been eliminated. The Department of Commerce Dismantling Act is the first step toward downsizing an overgrown federal bureaucracy and reversing a forty year trend toward bigger and more expensive government.

THE FEDERAL GOVERNMENT IS BROKE

With chronic budget deficits and trillions of dollars of debt, our nation must set priorities in how we allocate our limited federal resources.

We need to eliminate unnecessary programs.

We need to consolidate duplicative programs.

We need to streamline beneficial programs.

We need to privatize those functions better performed by the private sector.

This is exactly what the Department of Commerce Dismantling Act does.

A MANDATE FOR CHANGE

The November Election provided a mandate for a smaller, more efficient, more focused federal government. By taking a close look at every program of the federal government, including those of the Department of Commerce, we can begin downsizing the bloated federal bureaucracy.

We will reverse the big government trend of the last 40 years, forcing the government to live within its means and returning power to states, communities, and individuals.

The Department of Commerce Dismantling Act is a detailed, thought-out plan that asks three important questions of every agency within the Department of Commerce.

1. Is this a necessary program? Or is it wasteful or duplicative?
2. If this is a necessary program, is this a task the government should be involved with, or is this a better job for the private sector?

3. If this is a program the government should be involved with, are we currently doing the job in the most efficient and effective way?

This next statement is not a Concord Coalition recommendation; but rather a local comment.

The Congress should consider a two-year or alternate year budget and appropriation process. I am sure that you have a term for this and have discussed this previously.

Our Federal spending fiscal year ends September 30th. Government agencies, and especially defense related installations are under pressure to spend the entire appropriation as August and September come about - even though priorities have changed or plans are not in step with changed missions. Recieving agencies and the Congress could better supervise and track our tax money expenditures without an annual "spend or lose it" concept under near panic condition that produces waste. I have never heard of a Federal Agency turning money back.

Thank you Gentlemen.

Joe Rose

STATEMENT OF TONY OLMI, PRESIDENT, NEW MEXICO CHRISTIAN COALITION

Mr. OLMI. My name is Tony Olmi, I am president of the New Mexico Christian Coalition. I have submitted written testimony today, but I thought that I would share a little anecdote with you that I believe is the case in point and perhaps part of the consideration for this committee.

Nobody has addressed the postal system today that I know of, but I know that I and a couple of others have received some mail that was postmarked in Washington, September 29, from GOPAC announcing this meeting. I received it Saturday, the 7th of October, and I do not know if it is efficiency or a difference of philosophy that perhaps slowed the mail down to us, but nonetheless, I would like to suggest that one of the areas you might look at is the postal system.

Thank you very much.

[The prepared statement of Mr. Olmi follows:]

Antonio M. (Tony) Olmi, Chairman
New Mexico Christian Coalition

October 8, 1995

Congressman Steve Schiff, Vice-Chairman
Committee on Government Reform and Oversight

Re: 21st Century Government Introduction

Congressman Schiff and Committee Members:

I wish to thank you on behalf of the New Mexico Christian Coalition for the opportunity to testify before your committee in Albuquerque, New Mexico.

We have been asked to address the "streamlining of Government to Function Effectively in the 21st Century". We must, therefore, make a few presumptions:

1) That government has a legitimate function.
2) That the function can be measured.
3) That its function is in need of streamlining.
4) That there are tools of measurement.
5) And that the tools may be calibrated based on some absolute point of reference and empirical laws.

As Christians and "people of faith," we rely on the inerant Word of God, the Bible, as our "owner's manual" and "standard operating procedure." It is our "absolute" point of reference. We acknowledge that there are those who would deny that there are any absolutes, but we cannot accept the theory that all is relative and that there are no absolutes.

We further acknowledge that as imperfect vessels, we wrestle with the "Word of God" much as we fumble with the instructions of our VCR manuals. This also applies to our Constitution. However, in each case we must rely on, and return to, the book of basic instruction for successful operation (living). To do otherwise is foolishness.

It is on the presumption of the absolute authority of the "Word of God" that enables us to measure all things, past, present, and future. His Word tells us that God is the same yesterday, today , and forever.

We know that there will also be an abundance of testimony given by others as to specific ideas for particular situations. It is our intent to provide principles by which to measure such ideas.

1) Statement of Philosophy of Government

Isa 33 22
22 For the LORD is our judge, the LORD is our lawgiver, the LORD is our king; he will save us.

In order to consider how our government may be streamlined, we must first look to its genesis and its present form to compare its current status to its original intended function. For the purpose of these hearings, we will presume that the function of government has burgeoned beyond its originally intended authority and scope. Thus, the role of the Committee on Government Reform and Oversight and these series of hearings have been rendered symptomatically valid.

In contemplating any form of government, it is essential to first consider the source of authority of any ruling body. The recognition and acceptance of that authority derives from the cultural and religious belief system of the governed. Whether a benign or malevolent dictatorship or a republican / democratic (free) form of rule, order must prevail. Social and personal discipline will either be exacted by the ruler or by the ruled. The Christian perspective of a free society is based on the laws of God and personal discipline - therefore, requiring nominal governmental intervention in the lives of the individual and social interaction. On the contrary, a non-free or dictatorial form of government takes on the mantle of authority for personal and social disciplines. The latter inevitably creates an environment of hostility between the governed and the governing. In a society where government is servant (of, by, and for the people), the authority rests with the people who in turn submit to the authority of God. The mood of this nation seems to be that the servant now seeks to be master as is evidenced by the cost, the size, and the magnitude of our current government which has resulted from the usurpation of the power and responsibility of the people.

Matt 10:24
24 "A student is not above his teacher, nor a servant above his master."

In the struggle for power between the ruler and the ruled, the ruling forces invariably are perceived as evil and despotic.

Prov 29:2
2 When the righteous increase, the people rejoice, but when a wicked man rules, people groan.

There is a growing perception, and probably reality, that government has been allowed to usurp the authority of God and the authority of the people granted by Him. During this struggle and shift of power, this nation seems to have lost its vision and direction.

Prov 29:18
18 Where there is no vision, the people perish (are unrestrained): but he that keepeth the law, happy is he.

We seemed to have arrived at a time when this nation is also losing its position of leadership and respect globally and is deteriorating from within.

Therefore, we must reconsider the legitimate role of government and the responsibility of the individual. Karl Marx called religion the "Opiate" of the People. We have seen the fruits of Maxism and must not allow government to become the "Opiate" of the People.

2) Historical Perspective

a. Religious influences in the foundation of our form of government

"The moral principles and precepts contained in the Scriptures ought to form the basis of all our civil constitutions and laws. All the miseries and evils which men suffer from vice, crime, ambitions, injustice, oppression, slavery, and war proceed from their despising or neglecting the precepts contained in the Bible." *(Noah Webster)*

b. Constitutional authority derived from religious thought and political necessity

WE THE PEOPLE of the United States, in order to form a more perfect union, establish justice, insure domestic tranquillity, provide for the common defense, promote the general welfare, and secure the blessings of liberty to ourselves and our posterity, do ordain and establish this Constitution for the United States of America. *(Preamble to the United States Constitution)*

3) 200 Years of Experiment

a. Successes

This nation to date has protected the freedom of the individual through a free form of government longer than any other nation in history. However, many of the individual freedoms taken for granted in the past are now in peril.

b. Failures

The implementation of "The Great Society" has served to de-motivate many people and encourage their dependency on 'big government'. Many individuals in our society are encouraged by government policies and programs to seek short term security and comfort at the expense of permanent freedom.

4) Back to Basics

We must caution that mere transference of "power" to states by block grants does not guarantee nor promote the sovereignty of the states or of the individual. So long as the power to tax and the dispensing of the money remains predominantly with the Federal Government, the "Golden Rule" will be invoked; "THEY THAT HAVE THE GOLD - RULE!" Block grants to the states may be nothing more than "smoke and mirrors".

a. The Contract with America

Although the Contract with America does much to diminish the role of the Federal Government and bespeaks of individual responsibilities, it does not, in its original efforts, go far enough. The winds of political realities will be enough to bend the stick but not to break it.

b. The Contract with the American Family

The Contract with the American Family exposes blatant misuse of public trust by the Legal Services Corporation, the National Education Association (NEA), the National Endowment for the Arts (NEA, NEH, CPB), and finally the taking of innocent human life (abortion) with taxpayer dollars.

Positive ideas of returning education control to the local level, promoting school choice, protecting parental rights, and providing for family-friendly tax relief are consistent with Biblical and Constitutional principles.

c. The Project for American Renewal

The Project for American Renewal offered by Senator Dan Coats also does much for creating a pro-active environment for the renewal and restoration of an ailing society. This committee may do well to consider that we need to "offer a vision of healing for broken communities -- not through government, but through those private institutions and moral ideals that defeat despair and nurture lives."

d. Rhetoric

As we can judge individuals by what proceeds from their mouths, much can also be discerned from the rhetoric of a nation. Some politicians and Hollywood personalities are now in "the act" of attempting to modify rhetoric and behavior. "Character Counts" has a certain appealing ring, but falls short by excluding such terms as morality, *VIRTUE*, integrity, courage, family, etc. If such absolute principles as "Thou shalt not kill, Thou shalt not steal, and Honor thy father and thy mother" had not been removed from the halls and walls of our schools, we would not be attempting to grapple with our moral dilemma by use of the hooks of "situational ethics".

In the context of "Protector," 21st Century Government can be streamlined by its dedication to the simple role of fostering an environment for personal and religious freedom and responsibility.

In conclusion, we offer what we believe to be the ultimate considerations for good governing and for legislating good public policy:

1) What does God's Word say?
2) What does the Constitution say?
3) Do we need it?
4) Can we afford it?

Let us look to a time when we may proclaim, "VINI, VIDI, VICI"

Mr. SCHIFF. Thank you for being here. We have time for about one more. Sir, you are most welcome. I would be grateful if you would be kind enough to state your name for the record and if you have any affiliation you want to identify with, if you would do that too.

STATEMENT OF FRANK CLINARD, LIBERTARIAN PARTY OF NEW MEXICO

Mr. CLINARD. Yes, I do. My name is Frank Clinard, I am with the Libertarian Party of New Mexico.

We have a brief statement, I will give you copies of this, that we would like to present to the committee, and our topic is on reducing——

Mr. SCHIFF. And without objection, your statement will be made part of the record.

Mr. CLINARD. Very good, thank you.

We are suggesting two ways to reduce prison costs. One, establish a policy of victim restitution and the second, stop jailing people for victimless crimes.

So I will leave the document to speak for itself at that point. Thank you.

[The prepared statement of Mr. Clinard follows:]

A presentation at the hearing of the
House Committee on Government Reform and Oversight
on
"DOWNSIZING OF GOVERNMENT"

by Frank Clinard
Libertarian Party of New Mexico

Albuquerque, NM
October 9, 1995

Ladies and Gentlemen:

I am pleased to be able to speak to you today on this important matter. As you probably know, the Libertarian Party stands solidly behind all efforts to downsize government, both to save taxpayers' money and to preserve and expand our personal freedoms. In fact, we could talk for hours on this subject! However, today I will focus on just one topic:

REDUCING PRISON COSTS

Today our country leads the world in percentage of its population that is in prison at any one time. Because of this large prison population and the constitutional requirement that prisoners be housed under humane conditions, costs are very high and climbing. We urge that the following two changes be adopted to greatly reduce these expenses:

(1) Establish a Policy of Victim Restitution

Prisoners should be required to work at steady jobs while in prison, to repay the victims of their crimes and reduce the cost of their incarceration. Prisoners could retain a small "salary" for their personal use, but most of the money earned should go to those they have harmed. Work activities can include making products for sale within or outside the prison, raising food for the prison population, and building new facilities as needed. Such a policy will not only save money, but will instill good work habits that will be of great help once a prisoner is released.

(2) Stop Jailing People for Victimless Crimes

Today half of all prisoners in the United States are in jail for committing victimless crimes, mostly related to drugs. And yet drug trafficking and its associated violence continue to worsen. In order to turn this around, we must legalize and regulate what are presently illegal drugs. The consequences will on balance be beneficial, for the following reasons:

- Crime associated with the drug trade will be virtually eliminated, as was the case with alcohol when we repealed Prohibition;

- over -

- Drug-related illnesses and deaths will be reduced, as contaminated drugs and needles disappear;
- The number of addicts will decrease as, for the first time, victims can openly seek help;
- The street trade and its associated violence will die out as legitimate stores drive the pushers out of business;
- Children will be protected by laws banning under-age sales, as is the case today with alcohol;
- The alarming trend to stronger drugs will be reversed, as has happened with legal products such as beer, wine, and liquor (lower alcohol content) and cigarettes (reduced nicotine and tar).

If these policies are adopted, major downsizing of government will result: costs of building, maintaining, and staffing new prisons will plunge; the ever-increasing demand for more police, coast guard, and other paramilitary forces to fight the drug trade will be reversed; and obtrusive agencies such as the DEA and BATF can be scaled back or eliminated. And just as important, we will have brought about a more humane and crime-free nation.

Frank Clinard is a former Chair of the Libertarian Party of New Mexico, and is currently Public Relations Director for the State Party. He can be reached at:

2940 Arizona Ave.
Los Alamos, NM 87544
(505) 662-4951

Mr. SCHIFF. I just want to say that we had impressive testimony from beginning to end, all the way through, I am very pleased with it.

Ladies and gentlemen, once again, any hurrying up of any witness I want to state was not intended as any discourtesy, but I have to catch a plane to Washington right behind my colleagues because we have votes tomorrow on the House floor, and that is the reason. I hope you understand that.

Again a reminder that for anyone who spoke to us or for any of the 28 organizations, including the Sierra Club, which accidentally was left off the list that we distributed, that wishes to submit written testimony, it can be submitted to my office, with the chairman's permission, through this coming Friday. We will send it on for the record. So if you spoke to us or if you were invited to give written testimony on behalf of your groups and did not get a chance to get the written testimony complete, you do have several more days.

With that, I want to join the chairman in thanking the staff who helped put this hearing together, both the committee staff and staff of my office. I want to thank once again TVI President Sanchez and the board, for allowing us to use this facility. I want to thank all of you—many of you were here from beginning to end—for being here, being part of the audience and for contributing.

And with that, the hearing is adjourned.

[Whereupon, at 2:15 p.m., the committee was adjourned.]

[Additional information submitted for the hearing record follows:]

NARFE NEW MEXICO FEDERATION OF CHAPTERS
National Association of Retired Federal Employees
Federation President Russell Boor (505) 382-7478
5843 Agave Lane, Las Cruces, NM 88012

October 20, 1995

Chairman Clinger, New Mexico Congressman Steven Schiff and other members of the House Government Reform and Oversight Committee, I want to thank you for this opportunity to share my views on the Federal government of the 21st century.

My name is Russell Boor. I am President of the New Mexico Federation of Chapters of the National Association of Retired Federal Employees (NARFE). As many of you know, NARFE is the only organization dedicated solely to protecting the earned retirement benefits of federal workers, retirees and their survivors. Moreover, NARFE members number some 500,000, with more than 1,740 local chapters and 53 federations, across the nation and overseas. At the invitation of Congressman Schiff, I have been asked to share my views and thoughts on how government should be streamlined to function as we enter the 21st century. While I am no expert on the issues of the organization and structure of government programs and functions, I do know that no matter the shape or size of the Federal government, come the year 2000 and beyond, there will still be a need for qualified professional and skilled workers to provide public services and operate essential government functions. Therefore, it is imperative that this committee include the important issue of recruiting and retaining federal workers as part of the larger debate over the size, shape and function of the Federal government in the 21st century. Without career employees, the Federal government will have little hope of becoming and remain streamlined.

When I worked for the Federal government, public service was a good thing. It was a career. It was honest work. And upon my retirement in 1990 as a Division Chief with the Department of Army's weapons system testing operation at White Sands Missile

Range, I now look back on a career that was rewarding and challenging, and provided me an opportunity to serve the nation and the American people. I am thankful for the opportunities provided me, but I am concerned that my generation may be the last to view government service as a good thing, as a career, as an opportunity to serve the nation and the American people.

All of us know that Federal government service has seen better days. The 1994 General Accounting Office (GAO) report "How Government Jobs Are Viewed On Some College Campuses" revealed that graduates had little interest in working for the federal government. The reasons given for not considering federal service included low non-competitive starting salaries and the poor image of government work and employees.

In 1990, the General Accounting Office (GAO) warned that "recruitment and retention problems pose a major risk of reducing the quality of government services and programs." In its report to Congress, GAO noted that "limitations on federal pay adjustments since the late 1970s have created a federal/private pay gap where average private sector salaries exceed average federal salaries by about 25 percent." Last year, the U.S. Department of Labor reported an average pay gap of 28 percent, despite the Federal Employees Pay Comparability Act of 1990, which outlined a mix of local and national raises to bring federal pay into line with the private sector early in the 21st century. However, proposed raises well below the targets established by Congress and the Bush Administration in the 1990 law will not close the gap, and, in fact, Maryland Senator Paul Sarbanes estimates that the "diluted raises" will cost federal workers $85 billion in lost wages. This loss will also be reflected in retirement income, since the amount of an employee's earned annuity is based on earnings.

As a retired federal worker and past recruiter of scientific and engineering personnel for the Department of the Army, I can tell you that retirement benefits are an essential part of the overall compensation package for recruiting and retaining both professional and skilled workers. As the U.S. Supreme Court noted in Davis v. Michigan, "Since the amount of civil service retirement benefits is based and computed upon an individual's salary and years of service, it represents deferred compensation for service to the Government." NARFE is concerned that there are those who want to redefine the earned retirement benefits of federal workers, to change the compensation package not only for current and future federal workers, but for those who have already given the better part of their lives in public service with the expectation that work-related promises would be kept.

Clearly, the compensation package -- wages and benefits -- is important if the government, as an employer, wants to recruit and retain skilled and professional workers in the coming century. The findings of studies on this issue highlight the obstacles to attracting necessary workers. Moreover, there is a genuine concern that the breaking of promises made to former federal workers -- federal retirees -- will only serve to make recruitment and retention even more difficult in the years to come.

As President of the New Mexico Federation of Chapters I travel throughout the state, visiting NARFE's 24 chapters. During those visits I had the opportunity to ask many Federal retirees if they would recommend the Federal government as a career. I was astonished at their answers. Almost to the person, the response was "If they need a job, I would recommend the Federal government, but if they are interested in a career, look elsewhere since the Federal government cannot be trusted to keep their word concerning retirement pay and benefits."

So, therefore, as Congress debates the size, shape and function of the Federal government for the 21st century, there are two fundamental questions that should not be overlooked. First, what compensation package, including retirement benefits, will the Federal government provide to recruit and retain the skilled workers needed to operate government programs and functions in the 21st century? And, will the Federal government, as an employer, keep the promises made to former, current and future employees? I am hopeful that members of this committee will address these questions. I am hopeful that you will provide for a compensation package that promotes recruitment and retention of qualified and skilled workers. And, I am hopeful that you will keep the promises made my generation of federal workers, so that future generations will know that promises made them will be kept.

I thank the members of the committee for this opportunity to speak on behalf of members of the National Association of Retired Federal Employees (NARFE).

Russell A. Boor
President, New Mexico Federation of Chapters
5843 Agave Lane
Las Cruces, NM 88012
(505) 382-7478

STATE OF NEW MEXICO
Office of Cultural Affairs

Gary E. Johnson
Governor

Gary Morton
Cultural Affairs Officer

October 8, 1995

Congressman Steven Schiff
625 Silver Ave., SW
Suite 140
Albuquerque, NM 87102

Dear Congressman Schiff:

As per your request, The Office of Cultural Affairs submits the following written testimony on Government Reform and Oversight.

I would like to begin my testimony with some personal background that I believe will be helpful in understanding my point of view. For the past eighteen years, I have been a self-employed artist. I am primarily a painter depicting the contemporary cowboy in a realistic manner. In 1987, Governor Garrey Carruthers appointed me to the New Mexico Arts Commission and in 1988 he appointed me Chairman of the Commission. I served as Chairman through March, 1995 at which time I was appointed by Governor Gary Johnson as Director for the Office of Cultural Affairs. I consider myself a conservative with a common sense approach to the realities facing government. Additionally, I have never applied or received any funding from the National Endowment for the Arts.

The future of cultural funding can not be addressed until some fundamental questions are answered. Please allow me to pose the questions which I feel should be considered in depth before decisions are made.

First of all, should art and culture be supported by taxpayer dollars and if so to what extent? If it is not supported, will the private sector fill the void that will be created? Will our cultural assets be sold to the highest bidder? Will future generations forgive us for abandoning their heritage? Is the preservation of our art and culture as important as protecting our environment or landscape? How many jobs are created by our cultural resources? What value is culture to the economy, especially in rural areas? How many lives are positively affected by an experience with art and culture? Finally, culture and life are inseparable, can we ignore our history, heritage, or the need for beauty, even in the simplest existence? These difficult questions and others should be addressed before the future of government's participation is determined.

I can only answer a few of these concerns with the information that currently exists about New Mexico. A recent study of art and cultural related activities found that the economic benefits to New Mexico are significant. For example, approximately 56,000 jobs are created--directly and indirectly--by art and culture. This compares to state government which employs 24,073 and University of New Mexico which employees 15,090. Also, the industry generates 1.6 billion dollars for the state's economy including 109 million dollars in local, state, and federal taxes. Some of this activity is generated by tourism. Of nine reasons why tourists come to the state, five of those are art and cultural experiences. New

Mexicans visit cultural activities and institutions at a much higher rate (70%) than the national average (41%). Approximately 19 million individual visits are recorded annually by the art and culture industry.

This study is conservative owing to the fact that it does not include individual artist's income. The business of art and culture has an undeniable impact in New Mexico. Certainly many segments of the cultural economy are commercially supported; however, other aspects, don't and never will make business sense. Museums are very costly to operate and can not pass those costs on to visitors. Also, many museums already receive private donations through non-profit foundations. Therefore, favorable tax laws are essential for the continuation of this private participation. Should these institutions disappear because they can't be self-supporting or profitable? These institutions should exist and for good reasons. A museum's primary mission is to preserve and protect our cultural inheritance, other responsibilities include exhibition and education. I also believe museums lend credibility to the private sector engaged in the sale of arts, crafts, historic objects, and cultural tourism.

Federal funding for the arts serves as seed money for thousands of events presented by non-profit groups annually. The federal money creates matching money from the state, local, and private sector. These events benefit individual artists, performers, the local economy, and quality of life for residents. The effects of this "seed" money is felt in the most remote regions of this country. Indian artisans, Hispanic woodcarvers, weavers, saddlemakers, basket makers, painters, dancers, potters, musicians, and countless others all benefit directly by this investment. In fact, economic development for rural New Mexico

may hinge on arts and culture.

Other services such as libraries and historic preservation are important to the cultural well being of our state. Both functions receive federal funding that would not be replaced by the private sector. The preservation of historic buildings can be an economic benefit to a community. Historic and archeological sites would be destroyed without public protection. Library services include books on tape for the visually handicapped, bookmobiles which serve rural areas, and electronic information exchange systems. Once again, if the state does not pick up these costs, it would be very costly to the public.

If we can attribute the negative behavior of our society with the effects of moral decay and violence in the commercial environment, we must also consider the positive results of good experiences with art and culture. In New Mexico the cultural institutions educate thousands of children through visits and outreach programs. Preserving and presenting this country's cultural traditions and artistic wealth is a responsibility that should be considered essential.

We are all aware that cultural funding is a small percentage of the budget. This is evident when compared to the funding used to support a military band, the cost of a high-tech bomber, or more recently, the hidden billion dollars or the seven billion dollars given to the military, which it didn't want. The fundamental question is one of priority and where does cultural funding fit in the overall budget.

In conclusion, if the country agrees that culture is important and should receive funding, then some restructuring is appropriate. My primary concern is that this process include representation from cultural presenters from throughout the country. Development

from within the industry will be essential to the efficiency and effectiveness of restructuring that occurs. I ask the committee to consider the long reaching impact of art and culture in our society and thank you for this opportunity to express my thoughts.

Respectfully,

Gary Morton, Director
Office of Cultural Affairs

Patricia Johnson
New Mexico AARP State Director

AARP is a nonprofit membership organization that seeks through advocacy, education, and service to enhance the quality of life for all by promoting independence, dignity and purpose. The volunteers bring their lifetimes of experience and leadership to serve all generations.

Developing legislative recommendations to serve the interests of a group as diverse as older Americans thus constitutes a formidable task. Similarly, AARP joins all concerned Americans in seeking optimal efficiency of the process. And has numerous suggestions on how both the governmental structure and the service delivery system can be streamlined for an improved "product" at a lower cost to all consumers-we taxpayers.

The scope of the recommendations summarized below extends well beyond the "traditional" legislative issues of Social Security and Medicare that reach almost all Americans aged 65 and over; increasingly, we recognize that banking, insurance, work place, transportation, consumer protection, and personal rights issues often post concerns that are of particular interest to older Americans:

Health Care

AARP recognizes the significant advances states can and have made to date toward important health care reforms. Therefore, the Association believes that waivers from certain aspects of these statutes are appropriate and even desirable under specific circumstances. However, so as not to undermine current coverage or protections, certain criteria should be observed.

Low-Income Assistance Programs

The Social Security Administration, the U.S. Department of Agriculture, the U.S. Department of Veterans Affairs, and the Health Care Financing Administration should establish and maintain effective programs of outreach, including public-private partnerships, to improve participation in low-income assistance programs. All agencies that administer public benefit programs should train their staff to be courteous to clients and provide prompt help with problems. Prompt, complete enforcement and implementation of federal laws are also necessary.

Application forms and program notices should be simplified to make them non-threatening and easier to understand. Federal agencies should provide guidance to states in making their forms easier to use. Materials should be available in large type, in both English and appropriate foreign languages

Food Stamps

Congress should increase basic food stamp benefit levels and provide full funding for outreach provisions of the Food Stamp Act.

The USDA must monitor and enforce provisions of the Food Stamp Act that require streamlined food stamp application through Social Security Administration offices.

The USDA must issue regulations to implement Food Stamp Act amendments that require states to provide a method of elderly and disabled applicants to estimate their monthly medical expense deduction for calculating food stamp benefits.

Public Benefits

The Association supports legislation and regulatory action to streamline and coordinate application procedures among different assistance programs and to inform potential beneficiaries

of the range of benefits for which they may be eligible. Where such coordination reduces administrative costs such savings should be used to provide benefits to those not eligible but unserved.

Congress should make eligibility criteria for public benefit programs more uniform.

Regulations regarding definitions of economic units, boarders, and cost-sharing under Supplemental Security Income (SSI) and the Food Stamp Program should be changed so as not to discriminate against those participating in home-sharing arrangements.

A training program should be developed and implemented to give all government employees who work on low-income assistance programs basic knowledge about the availability of other programs and resources for low-income persons. A coordinated effort among agencies to develop a single application form and access point for applicants should be a high priority. Clear and concise public information materials should be developed to describe all federal programs for which low-income applicants may be eligible. These materials, which should be printed in English and appropriate foreign languages and in large print, could be incorporated into expanded outreach programs, and should be routinely given to individuals applying for any type of federal low-income assistance. Forms should be designed so that they are understandable to persons with low literacy skills. All languages should be written so that persons with only a fourth-grade literacy level can understand them. Legal language, such as the Privacy Act requirements or definitions of fraud, should be written in plain English style.

Funding for the Social Services Block Grant (SSBG) should be increased. Administrative linkages between SSBG state plans and state plans under the Older Americans Act should be strengthened through interagency agreements.

The federal government should require state SSBG officials to provide a yearly report to the Department of Health and Human Services and to consult with state units on aging, area agencies on aging, and older persons to assure the commitment of block grant funds to implement the goals of state and area agency plans.

Congress should require states to prepare yearly expenditure reports providing age-specific and uniform data on program activities related to assessed social service needs of the population.

Transportation

The Federal Transit Administration (FTA) and Administration on Aging (AoA) should improve the planning and coordination of federal transportation services as provided under the 1991 Intermodal Surface Transportation Efficiency Act (ISTEA) and 1992 Older Americans Act. Enforce federal regulations that call for coordination between federally supported programs such as the state Department of Transportation (DOT), state unit on aging, and area agencies on aging in planning transportation services. As part of this effort, these programs should develop a system to collect uniform data on transportation services for older persons.

Housing

In a recent congressionally mandated study, the National Academy of Public Administration (NAPA) recommends that the number of programs administered by the Department be reduced from 200 to no more than 10 and that the Federal Housing Administration (FHA) be reestablished as a separate corporation under the Secretary's policy direction.

Congress should work closely with the Secretary of Housing and Urban Development (HUD), and all affected parties, to develop a long-term agenda to make HUD more efficient and effective. This agenda should include a rationalization of HUD programs; management reforms to enable the Department to improve service delivery, safeguard assets, and control program costs; and the development of policies, procedures, and staff resources that will enable HUD to become a full partner with the nation's communities in fostering innovative solutions to housing and community development problems. Any reorganization of HUD and its programs must include an adequate transition period and sufficient funding and staff resources.

Existing programs with a proven track record of good performance, such as Section 202 supportive Housing for the Elderly, should not be folded into a formula-driven block grant. Rather, HUD should work with states and localities to develop greater capacity to serve frail older persons and persons with disabilities using FHA credit enhancement, existing block grants, and enhanced consolidated planning requirements.

In summary, AARP is anxious to work with all concerned parties for effective reforms to the system; specific recommendations listed above are a selected few items gleaned from our Public Policy Agenda, and on behalf of the 175,000 New Mexico AARP members, I extend our willingness to assist on achieving these aims.

NMPIRG Fund
New Mexico Public Interest Research Group

State Office:
115-D Harvard Drive SE
Albuquerque, NM 87106
505 / 254-1244

Mailing Address:
Post Office Box 40173
Albuquerque, NM 87196

I am Jeanne Bassett the Executive Director for the New Mexico Public Interest Research Group (NMPIRG). Thank you for the opportunity to submit testimony today for the hearing on October 9, 1995, by the U.S. House of Representatives Committee on Government Reform and Oversight on "21st Century Government".

NMPIRG is a non-profit, non-partisan organization which works on environmental, consumer and good government issues. We have nearly 5,000 members in the state.

As an environmental and consumer protection group we have been working for a more **streamlined efficient government which will protect consumers and the environment.** In order to accomplish this goal we must: implement comprehensive campaign finance reform to get special interest money out of politics; cut polluter pork programs -- federal spending or subsidies which destroy the environment at the taxpayer expense; and to improve environmental and consumer protections through strengthening our existing laws with innovative policies such as toxics use reduction which prevents pollution from occurring in the first place.

A: Campaign Finance Reform: The cost of running for public office has soared to a point where ordinary people can barely dream of holding congressional office. In 1992, the average seat in the House of Representatives cost about $543,000 to win. The average seat in the United States Senate cost $3.9 million to win. Real or perceived the influence of money in politics is broadly recognized by the general public. Comprehensive campaign finance reform would include limits on PACs, individual contribution limits, overall spending limits, closing the soft money loophole, public financing and lobby reform.

B. Cut Polluter Pork Programs - Save Tax Dollars and the Environment: Earlier this year, PIRGs around the country joined taxpayer, free-market and other environmental groups in releasing the

Green Scissors Report which recommends cutting 34 wasteful, environmentally-damaging programs to save taxpayers $33 billion. Many more billions could be saved by eliminating tax loopholes which encourage polluting activities. A few of these programs are outlined below.

Plundering our Public Lands:

The mining, ranching and timber industries have been reaping free or below-cost handouts from American taxpayers for too long. The mining industry extracts an estimated $3.6 billion worth of gold, silver and other minerals from our public lands without paying a dime to the federal treasury. The industry also reaps over $4 billion per year in generous tax breaks. We still participate in the outrageous practice of selling public lands to the mining industry for $5.00 or less per acre.

Since this Congress seems serious about reforming welfare, it should start with corporate welfare practices such as the Forest Service timber programs. The Chief Executive Officer of Louisiana Pacific, a major beneficiary of public lands logging, took home over $15 million from 1991 to 1993 -- why should tax dollars of hard working New Mexicans go to him?

We are dismayed to learn the House approved the so-called "salvage" timber provision inserted into the FY95 rescissions bill (HR 1158). Rep. Yates estimated this provision would cost taxpayers $375 million per year. The amendment specifies that this 'salvage' logging program be carried out without regard to fiscal impacts. More troubling is the exemption from "all applicable Federal Laws", which would jeopardize the health and safety of people living downstream from the logged areas. We oppose this blatant giveaway which will destroy public resources.

Energy Subsidies:

The $28 billion-a-year coal industry should also be cut off from the public dole. Coal-burning power plants are a major source of carbon dioxide, greenhouse gases, and are the leading

cause of acid rain. Coal-burning power plants have a Clean Air Act incentive to clean up their act. Taxpayers should not be funding a $2.7 billion Clean Coal program or additional coal research and development programs.

In addition, taxpayers should not be subsidizing the nuclear industry which generates lethal radioactive waste and has failed the marketplace test. We were successful in terminating the GT-MHR (Gas Turbine Modular Helium) nuclear reactor program, a prime piece of corporate welfare which primarily benefits one company, General Atomics of San Diego. The gas-cooled reactor that General Atomics wants to build would cost taxpayers at least $2.6 billion and is designed without key safety features to prevent the release of radioactivity. We appreciate Representative Schiff's wise vote to kill this boondoggle.

Congress is currently deciding long-term spending and tax issues. We urge members of Congress who truly want a more efficient streamlined government to slash polluter pork programs.

C. Innovative policies: According to major industries in this country currently 200 million pounds of toxic waste are dumped annually into our environment. Another important component of an efficient government is through strengthening existing laws with innovative polices such as toxics use reduction which prevents pollution from occurring in the first place. Comprehensive toxics use reduction includes developing programs to "sunset" or phase-out the production of the most hazardous chemicals, and requiring facilities discharging toxics into our air, land and water to publicly report their toxic chemical use and develop pollution prevention plans and goals.

Thank you for the opportunity to submit testimony on the importance of a more streamlined and efficient government which will protect consumers and the environment. NMPIRG looks forward to working with Congressman Schiff in developing these policies.

City of Albuquerque
P.O. BOX 1293 ALBUQUERQUE, NEW MEXICO 87103

REMARKS BY MAYOR MARTIN J. CHAVEZ, CITY OF ALBUQUERQUE
TO THE HOUSE COMMITTEE ON GOVERNMENT REFORM AND OVERSIGHT
OCTOBER 10, 1995

Mr. Chairman and members of the House Committee on Government Reform and Oversight, I'd like to welcome you to the City of Albuquerque. I am delighted to be able to present to you today some of the lessons we've learned and the strategies we've developed as we've tackled the crucial issues of government downsizing and reorganization. While my administration is committed to transforming government, we must ensure that "downsizing and reorganization" alone are not the goal, but that our actions will provide excellent, more efficient public service, and a safe quality of life for our citizens.

To achieve this, I have directed my staff to reexamine the "way we do our daily business", to ensure that all city employees are customer-service oriented. I've also had them look around the country and examine other community programs, both successful and not-so-successful, so that we neither ignore the successes of others, or make avoidable mistakes, and, most importantly, we've developed new ways to involve our citizens in government decision making, to make sure we are meeting the needs of the public in the most efficient way possible.

To date, our biggest successes have been in the development of - - public-private partnerships with our business community, providing a dynamic blueprint for economic development - a "one-stop-shop" for planning, permitting, and zoning requests, to speed up development requests - "community-based policing" to ensure responsive police services and thus safer neighborhoods,- a Council on Gangs to provide a proactive anti-gang program, - and a pilot Middle School Initiative to return sports back to our vulnerable mid-school-aged students. We also have a unique program within City Hall to develop ways to make government more entrepreneurial and profit-generating. Since I know you want to hear from others this morning, we've provided you with a detailed description of each of these programs.

We all are finding that true change is neither simple nor easy - but the challenge to be creative and find better, more responsible and responsive ways to meet the public interest, while often difficult, is also exciting, and must be faced if we are to solve our problems both at the local, and the national levels. I appreciate the opportunity to address you.

THE CITY OF ALBUQUERQUE IS AN EQUAL OPPORTUNITY/REASONABLE ACCOMMODATION EMPLOYER

Greater Albuquerque
Habitat for Humanity

Habitat For Humanity Of New Mexico

GOVERNMENT IN THE TWENTY-FIRST CENTURY

TO: The Government Oversight Committee

STATEMENT OF HOUSING NEEDS IN NEW MEXICO

The American dream of home ownership is more and more elusive to the average family in New Mexico. As land costs soar, building materials costs climb, stricter and more expensive regulations are placed on builders while household incomes remain static, the prospect of home ownership dims. Employees in Albuquerque have seen their average earnings, as a percent of the national average, slip from 92% in 1972 to 86% in 1993. (1) Although new manufacturing jobs have grabbed the headlines in recent years, it is the service sector which has experienced the largest growth. Those employed in this sector are low income families who face a heavy cost burden when seeking home ownership. The median priced existing home in Albuquerque is now $110,000, a figure which excludes ownership by 44% of families. New construction is considerably higher. (2)

Furthermore, it is estimated that statewide by the year 2000, there will be 81,900 households at 30% or below the median income. This segment of the population cannot hope to own a home and will require some from of subsidized housing. Over 73,000 persons in the 30-50% of median income bracket will need housing

3501 Campus Blvd. NE, Albuquerque, NM 87106 Phone: 505-265-0057 Fax: 505-265-0077

assistance by the year 2000. (3)

New Mexico's demographics are changing with a rapid population growth in two distinct segments: the very poor, mostly immigrants, and the very affluent. Communities such as Taos, Santa Fe and Las Cruces have experienced this boom, while Albuquerque holds the distinction of being the 14th least affordable community in the nation for housing. (4) Impact fees are now under consideration statewide. These fees include already codified UEC charges and park fees and if increased by the proposed 200% would move Albuquerque into the 6th least affordable community. (5) The New Mexico CHAS report for 1994 described the immediate need as 60,000 housing units although rapid growth has outstripped this estimate.

HABITAT FOR HUMANITY OF NEW MEXICO

Habitat for Humanity International will be the largest builder of homes worldwide by the year 2000. It succeeds because of its grass roots nature of neighbor helping neighbor. Habitat for Humanity began in NM in 1987 in response to the acute need for affordable housing. Habitat of NM is committed to serve those families below the 50% of median income as defined by HUD, which for a family of 4 ranges from $9,000 to $19,500 per annum. Applicant families must have sufficient income to repay a 20 year 0% interest mortgage, must provide 500 hours of "sweat Equity" and must be presently residing in very inadequate or unsafe housing. The last criterium, in most cases, excludes those in

government subsidized rentals. As a 501(c)3 charitable organization, we receive tax-deductible donations from individuals, churches and business organizations concerned about inadequate shelter in our affluent society.

HABITAT AND GOVERNMENT AGENCIES

In 1994 Habitat's International Board of Directors established a strict policy for the use of government funds by its affiliates nationwide. In summary, it states that Habitat welcomes partnership with government to purchase land or homes for rehabilitation, street and utility infrastructure and administrative expenses including salaries for employees. Habitat as an international organization of 20 years has established a good reputation as a builder of safe, decent homes with strict stewardship of assets. Some participants fear government involvement would "taint" Habitat's reputation because of the "waste and fraud" exposed in the past by government entities. Others are concerned that Habitat may become dependent on government money or that the organization would lose its character as a volunteer, community-based organization. However, Habitat's second mission is to raise the awareness of affordable housing needs, recognizing that the problem requires a multifaceted response from the government, the private and nonprofit sectors. (See attachment)

Partnership with government by the ten Habitat affiliates in New Mexico has been limited to the use of community block grants

for land purchase and infrastructure such as the purchase of water meters. Staffed mainly by volunteers, the affiliates do not have the time or expertise to deal with the complicated paperwork that is required for government grant Programs such as HOME and Hope III.

In NM there are over 250 city, county, private and non-profit groups concerned solely with housing, including 114 non-profits who strive to help the poor, the elderly, the mentally and physically handicapped, etc. The existence of so many housing advocate groups speaks to the extreme need for adequate housing for the less affluent in our state.

RECOMMENDATIONS

1. Increase federal block grant monies sharply to individual states for housing needs. Simplify the paper work for making the funds available to housing advocates who have a proven track record.

2. Continue and expand federal programs which reward personal involvement similar to Habitat's "sweat equity".

3. Reduce government regulations which affect affordable housing and which are really regressive taxes on the poor and disadvantaged. A special advisory committee to President Bush found that unnecessary regulations can add 20-35% to the cost of building a new home. (6)

4. Integrate low, moderate and high cost homes as new

neighborhoods are developed. We need to shorten the gap between the "haves and the have nots."

5. Encourage in-fill housing to help prevent urban sprawl.

6. Provide tax incentives to home buyers who would restore or rehabilitate existing homes in decaying neighborhoods.

7. Save our forests by giving tax incentives for using alternative building materials such as straw bale and recycled steel.

8. Restore tax incentives on energy saving construction methods, e.g. solar energy, rammed earth, etc.

Footnotes

(1) University of NM's Bureau of Business and Economic Research.

(2) Affordable Housing Committee, City of Albuquerque, July 7, 1995.

(3) N.M. Department of Housing

(4) Albuquerque Journal, Aug. 21, 1995.

(5) Home Builder's Association of Central New Mexico

(6) Jim Irvine, President, National Association of Home Builders.

WRITTEN TESTIMONY OF THE AMERICAN LEGION OF NEW MEXICO
L.A. "TONY" SANTILLANES DEPARTMENT ADJUTANT

TO U.S. HOUSE OF REPRESENTATIVES
COMMITTEE ON GOVERNMENT REFORM
OCTOBER 9, 1995, ALBUQ. NM.

MR CHAIRMAN AND MEMBERS OF THE COMMITTEE;

I AM LOUIS A. SANTILLANES THE DEPARTMENT ADJUTANT FOR THE AMERICAN LEGION DEPARTMENT OF NEW MEXICO AND AS DEPARTMENT ADJUTANT I AM THE ADMINISTRATIVE OFFICER OF THE AMERICAN LEGION WITH THE RESPONSIBILITY OF INSURING THAT ALL OUR MANDATES ARE CARRIED OUT. THE AMERICAN LEGION IS THE WORLDS LARGEST WAR TIME VETERANS ORGANIZATION IN THE WORLD COMPRISED OF OVER 3 MILLION MEMBERS. THE MAIN OBJECTIVE OF OUR ORGANIZATION IS THE REHABILITATION OF THE VETERANS AND THE CARE OF VETERANS AND THEIR DEPENDENTS IN NEED.

OUR HEADQUARTERS OFFICE IS LOCATED AT 1215 MOUNTAIN ROAD NE. IN ALBUQUERQUE.

I REPRESENT 16,000 MEMBERS OF THE AMERICAN LEGION IN THE STATE OF NEW MEXICO AND 5000 WOMEN OF THE AMERICAN LEGION AUXILIARY PLUS THE 170,000 VETERANS WHO LIVE IN THE STATE OF NEW MEXICO AND I KEEP TRACK OF ALL LEGISLATION THAT AFFECTS ALL VETERANS PLUS HAVE AN OFFICE FOR A SERVICE OFFICER WHO IS THE ADVOCATE THAT SUBMITS ALL CLAIMS FOR VETERANS THAT GIVE HIM THE POWER OF ATTORNEY TO ACT ON THEIR BEHALF TO INSURE THAT THEY RECEIVE ANY AND ALL BENEFITS DUE THEM OR THEIR DEPENDENTS.

AS MORE THINGS CHANGE MORE THINGS REMAIN THE SAME AND THE NEED FOR OUR GOVERNMENT TO TAKE CARE OF VETERANS AND THEIR

WRITTEN TESTIMONY OF THE AMERICAN LEGION OF NEW MEXICO
L.A. "TONY" SANTILLANES DEPARTMENT ADJUTANT

DEPENDENTS WILL NOT DIMINISH AS THE YEARS GO BY RATHER AS ALL THESE VETERANS GET ON IN AGE SOME OF THEIR WAR INJURIES AND ILLNESSES WILL START BECOMING MORE OF A PROBLEM THAN WHEN THEY WERE YOUNGER AND ABLE TO FEND FOR THEMSELVES.

THEREFORE IN THE TWENTY-FIRST CENTURY THE COUNTRY STILL WILL HAVE THE RESPONSIBILITY OF THE DEFENSE OF OUR COUNTRY .

IN THIS RESPECT THE COUNTRY HAS TO MAKE SURE THAT IT DOES NOT BECOME COMPLACENT AND THAT ENOUGH FUNDS ARE ALLOCATED TO KEEP THE COUNTRY DEFENSIVELY STRONG.

ALSO IN THIS SAME VEIN WE HAVE TO MAKE SURE THAT OUR GOVERNMENT TAKES CARE OF THEIR DEFENDERS THAT ARE IN THE SERVICE OF THEIR COUNTRY. THEY HAVE TO INSURE THAT NO MEMBER OF OUR ARMED FORCES IS SURVIVING ON A POVERTY LINE SUBSISTENCE, BUT INSTEAD BEING COMPENSATED AS A PROFESSIONAL WITH A SPECIFIC JOB TO DO. I AM NOT JUST TALKING ABOUT THE OFFICERS BUT MAINLY THE NON-COMMISSIONED OFFICERS AND THE REGULAR ENLISTED MAN.

THE GOVERNMENT WILL ALSO HAVE IN THE TWENTY-FIRST CENTURY THE SAME RESPONSIBILITY OF TAKING CARE OF THE SERVICE CONNECTED DISABLED VETERANS AND THEIR DEPENDENTS.

THE GOVERNMENT HAS GOT TO RETHINK AND REDEDICATE ITSELF TO THE WELFARE OF THE VETERANS WHO HAVE ALREADY SERVED THEIR COUNTRY AND BECAUSE OF THAT SERVICE ARE NOW IN NEED OF MEDICAL ASSISTANCE OR IN NEED OF FINANCIAL ASSISTANCE.

WE HAVE AS WE GO INTO THE TWENTY-FIRST CENTURY REMEMBER THE PROMISES THAT WERE MADE TO THESE MEN WHO SERVED THEIR COUNTRY

WRITTEN TESTIMONY OF THE AMERICAN LEGION OF NEW MEXICO
L.A. "TONY" SANTILLANES DEPARTMENT ADJUTANT

THAT THEIR WOUNDS AND ILLNESSES WOULD BE TAKEN CARE OF AND THAT IF BECAUSE OF THESE WOUNDS OR ILLNESSES THEY COULD NOT EARN A LIVING THAT THEY WOULD GET DISABILITY COMPENSATION. THE GOVERNMENT NEEDS TO LOOK AT THE VETERANS HOSPITAL SYSTEM AND COMMENCE TREATING ALL VETERANS AND THEIR DEPENDENTS UNDER A PROGRAM THAT WOULD ALLOW THE VETERANS HOSPITAL SYSTEM TO GENERATE FUNDS FROM 3RD PARTY ENTITIES SUCH AS INSURANCE AND MEDICARE AND MEDICAID FOR THE VETERANS AND THEIR DEPENDENTS THAT ARE NOT UNDER A SERVICE CONNECTED DISABILITY AND THAT WOULD CHOOSE TO BE TAKEN CARE OF BY THE VETERANS HOSPITAL SYSTEM.

IF THE VETERANS ADMINISTRATION HOSPITALS WERE ALLOWED TO BECOME QUASI H.M.O.S. AND WERE ALLOWED TO RETAIN ALL THE MONEY GENERATED FROM THIRD PARTY REIMBURSEMENT TO USE TO FINANCE THEIR PARTICULAR OPERATION THE DRAIN ON THE FEDERAL BUDGET WOULD BE ONLY FOR THE PURPOSE OF GIVING MEDICAL ATTENTION TO THOSE VETERANS THAT UNDER THE LAW ARE NOW BOTH LEGALLY AND MORALLY ENTITLED TO SUCH CARE.

THE FUNDS GENERATED FROM THE OTHER VETERANS AND THEIR DEPENDENTS WOULD GO A LONG WAYS IN FINANCING THE OPERATIONS OF THE HOSPITALS AND KEEPING THEM WORKING IN CO-OPERATION WITH THE MEDICAL SCHOOLS AROUND THE COUNTRY IN THE TRAINING OF FUTURE PHYSICIANS AND AT THE SAME TIME KEEPING FAITH WITH THEIR OTHER MISSION AND THAT IS TO BE AT ALL TIMES READY TO CARE FOR CASUALTIES OF WAR OR NATIONAL DISASTERS.

WRITTEN TESTIMONY OF THE AMERICAN LEGION OF NEW MEXICO
L.A. "TONY" SANTILLANES DEPARTMENT ADJUTANT

IF THE GOVERNMENT IN THE TWENTY-FIRST CENTURY FAILS TO KEEP TRUE TO ITS COMMITMENTS TO THE VETERANS OF THIS COUNTRY THEY MAY FIND THAT THE YOUNG MEN AND WOMEN OF THE FUTURE WILL NOT BE AS WILLING TO COMMIT TO DEFEND THEIR COUNTRY AS THESE VETERANS OF THE TWENTIETH CENTURY WERE.

WE AS VETERANS DO REALIZE THAT THIS COMMITMENTS MEANS MONEY THAT IS GETTING HARDER AND HARDER TO GET. BUT WE ALSO REALIZE MOST OF THE COUNTRIES, THAT WE AS VETERANS WERE ON THEIR SOILS FIGHTING FOR OUR LIVES AND FOR FREEDOM, NOT ONLY FOR OUR FREEDOM BUT FOR THEIRS, HAVE RECEIVED MONEYS TO REBUILD THEIR ECONOMIES AND TO REBUILD THEIR CITIES AND WE REALLY HAD NO OBLIGATION THERE, BUT WHERE THE OBLIGATION OF TAKING CARE OF OUR DISABLED VETERANS AND THEIR FAMILIES COMES INTO THE PICTURE THE LEGISLATORS START HAVING SECOND THOUGHTS.

WE FEEL THAT THE TAXATION SYSTEM HAS TO BE REVAMPED, WITH ALL THE SPECIAL LAWS AND REGULATIONS AND SPECIAL DEDUCTIONS AND THE THOUSANDS OF FEDERAL EMPLOYEES REQUIRED TO KEEP TRACK OF THE LAWS AND REGULATIONS, MAYBE A SALES TAX OR A FLAT TAX IS AN IDEA THAT NEEDS TO BE LOOKED AT NOW.

THE ONE THING THAT I WANT TO EMPHASIZE IS THAT WE AS VETERANS DO NOT WANT OUR COUNTRY BANKRUPT OR CONSISTENTLY IN A DEFICIT SPENDING MODE. BUT WE DO FEEL THAT THE GOVERNMENT HAS TO LIVE UP TO THE COMMITMENTS MADE TO THE VETERANS AND WE HAVE TO ADJUST OUR SPENDING AND OUR TAXATION TO FULFILL ALL OUR OBLIGATIONS.

WE NEED TO AS A NATION QUIT TRYING TO BE ALL THINGS FOR ALL

WRITTEN TESTIMONY OF THE AMERICAN LEGION OF NEW MEXICO
L.A. "TONY" SANTILLANES DEPARTMENT ADJUTANT

PEOPLE AND MAKING MORE AND MORE REGULATIONS THAT HINDER OR CURTAIL THEIR ABILITY TO MANAGE THEIR OWN LIVES AND BE ABLE TO RUN BUSINESS AND THEIR LIVES WITH LESS INTERFERENCE FROM THE GOVERNMENT.

FOR EXAMPLE THERE ARE LAWS AND REGULATIONS ON THE CLEAN AIR ACT AND ENVIRONMENT THAT ARE ALMOST ADMINISTERED THE SAME FOR A ONE MAN OPERATION AS FOR A MANUFACTURING CONGLOMERATE.

THE MONEY IT TAKES TO COMPLY HAS MANY SMALL BUSINESSES CLOSING OR LETTING EMPLOYEE'S GO BECAUSE THEY DON'T HAVE THE MONEY TO COMPLY AND IF THEY DON'T COMPLY THE EXCESSIVE FINES WILL BANKRUPT THEM.

LAWS AND REGULATIONS HAVE GOT TO BE TEMPERED WITH COMMON SENSE AND WITH A LOOK AT THE RAMIFICATIONS A SIMPLE REGULATION CAN CREATE FOR A SMALL OPERATION.

DON'T GET US WRONG THE UNITED STATES IS STILL THE BEST COUNTRY IN THE WORLD TO LIVE IN AND MANY OF THE VETERANS HAVE SEEN FIRST HAND HOW OTHER COUNTRIES OPERATE. BUT TO REMAIN STRONG WE HAVE TO AGAIN GENERATE PRIDE IN OUR COUNTRY AND REMAIN AS THE COUNTRY THAT ALWAYS FULFILLS IT COMMITMENTS BOTH TO ITS CITIZENS AND ALSO TO THE REST OF THE WORLD.

MR CHAIRMAN AND MEMBERS OF THE COMMITTEE I WANT TO THANK YOU FOR THE OPPORTUNITY THAT YOU HAVE EXTENDED TO THE AMERICAN LEGION AND ME PERSONALLY AND ALLOWING ME TO GIVE THIS TESTIMONY

L.A. "TONY" SANTILLANES

United We Stand America
New Mexico Office
6821 Montgomery Blvd. NE, Suite H
Albuquerque, NM 87109
PH (505) 837-2737/2738 FAX (505) 837-1033

U. S. House of Representatives
Committee On Government Reform and Oversight
"21st Century Government"
Vice Chairman: Representative Steven Schiff
Albuquerque, New Mexico, October 9, 1995

OPENING REMARKS:

ON BEHALF OF UNITED WE STAND AMERICA (UWSA), I WANT TO THANK YOU CONGRESSMEN FOR HOLDING THESE IMPORTANT HEARINGS IN ALBUQUERQUE. IN ADDITION, I WISH TO TAKE THIS OPPORTUNITY TO THANK YOU FOR YOUR COURAGEOUS LEADERSHIP IN THE CONGRESS. YOUR VOTING RECORD IN BEHALF OF ALL AMERICANS HAS BEEN EXEMPLARY. I SPEAK, PRIMARILY, OF THE CONTROVERSIAL TERM-LIMITS BILL SUBMITTED BY REPRESENTATIVE VAN HILLEARY.

WE ARE ESPECIALLY PLEASED TO HAVE BEEN ASKED TO PROVIDE THIS TESTIMONY, NOT ONLY FOR UWSA MEMBERS, BUT ALSO FOR MANY OTHER CITIZENS AND COALITIONS ACROSS OUR STATE THAT ARE VITALLY INTERESTED IN GOVERNMENT REFORM.

IT IS OUR SINCERE HOPE THAT YOU WILL TAKE TO HEART THE INPUT YOU RECEIVE HERE. WE TRUST THAT YOU WILL RETURN TO WASHINGTON MORE DETERMINED THAN EVER TO MAKE THE TOUGH DECISIONS NECESSARY TO REFORM OUR GOVERNMENT AND REGAIN THE CONFIDENCE AND TRUST OF THE AMERICAN PEOPLE.

CURRENT PROPOSALS:

UWSA HAS CAREFULLY STUDIED THE ISSUES AND HAS CONCLUDED THAT THE FOLLOWING SALIENT POINTS, IF ADDRESSED AS PROPOSED HEREWITH, WOULD EFFECT THE MOST EXTENSIVE AMELIORATION IN OUR GOVERNMENT:

- ***BALANCE THE BUDGET***: MANY OF OUR CITIZENS ACROSS THE NATION BELIEVE THAT AMERICA IS FACING THE GREATEST PERIL SINCE ITS FOUNDING 220 YEARS AGO. THE THREAT TO OUR SURVIVAL IS THE ECONOMIC CANCER OF A ***$5 TRILLION-DOLLAR DEBT*** THAT GROWS BY ONE BILLION DOLLARS A DAY. THE ***INTEREST*** ALONE NOW EXCEEDS ***$250 BILLION PER YEAR***. DESPITE THE PROMISES MADE TO THE AMERICAN PEOPLE, A ***BALANCED BUDGET*** IS STILL NOT A REALITY, AND, INDEED, IT HAS FAILED IN THE SENATE. THIS FAILURE HAS FURTHER ERODED THE CONFIDENCE OF THE AMERICAN PEOPLE IN THEIR GOVERNMENT. THE CURRENT SPIRAL OF THE DOLLAR IS TIED DIRECTLY TO THE FAILURE OF CONGRESS TO DEAL WITH THIS PROBLEM IN A MEANINGFUL WAY. TODAY, THE AMERICAN DOLLAR IS AT AN ALL-TIME LOW AGAINST THE JAPANESE YEN AND THE GERMAN MARK, AND SOON, EVEN THE CHINESE YUAN COULD POSE A THREAT TO THE DOLLAR AS THE PREEMINENT TRADING CURRENCY OF THE WORLD. FINALLY, THIS ***LEGACY*** WE ARE LEAVING OUR CHILDREN AND GRANDCHILDREN IS TOTALLY ***UNACCEPTABLE*** TO THE AMERICAN PEOPLE.

- ***CAMPAIGN FINANCE AND ELECTION REFORM***: WE MUST SET THE HIGHEST ETHICAL STANDARDS FOR THOSE WHO ASPIRE TO LEAD US FROM THE ***WHITE HOUSE*** AND THE ***CONGRESS***, AND, YES, FROM THOSE WHOM THEY APPOINT TO ASSIST. CAMPAIGN FINANCE REFORM CAN SOLVE MANY PROBLEMS AND LEVEL THE PLAYING FIELD SO THAT ***ALL*** CITIZENS WILL HAVE THE OPPORTUNITY TO ***PARTICIPATE*** AS A CANDIDATE FOR OFFICE IF THEY SO DESIRE. TODAY, ONLY THOSE WITH ***MONEY***, OR THAT ARE SUPPORTED BY ***SPECIAL INTEREST GROUPS***, ARE ABLE TO PARTICIPATE. THERE SHOULD BE ***LAWS*** IN PLACE THAT WOULD ***PRECLUDE*** ELECTED OFFICIALS FROM ACCEPTING CAMPAIGN FUNDING, OR GIFTS, MEALS, TRIPS OR JUNKETS, ***FROM LOBBYISTS, FOREIGN OR DOMESTIC***. NOT TO SAY THAT GOOD IDEAS CANNOT BE PASSED ALONG, ONLY THAT PERKS CANNOT ACCOMPANY THE IDEAS. WE PROPOSE THAT THOSE INTERESTED IN SERVING

THEIR COUNTRY SHOULD RAISE THEIR CAMPAIGN ***MONEY*** IN ***THEIR DISTRICT***, FROM THE PEOPLE THEY ARE GOING TO REPRESENT, AND THE SENATORS SHOULD GET THEIRS FROM WITHIN THEIR ***OWN STATE***. THE AMOUNT MUST BE ***CAPPED*** SO THAT NO ONE PERSON OR PERSONS, OR CORPORATIONS, WILL HAVE UNDUE INFLUENCE BECAUSE OF LARGE CONTRIBUTIONS. WE RECOGNIZE THAT MOST ELECTED OFFICIALS, OR ASPIRANTS, ARE PEOPLE OF GOOD CHARACTER AND MORAL STRENGTH, HOWEVER, THEY ARE THRUST INTO A SYSTEM THAT ALMOST FORCES THEM TO "GO ALONG," IN ORDER TO BE EFFECTIVE AND TO GET RE-ELECTED. THE ***CLEAN CONGRESS ACT OF 1995, H.R.2072***, SPONSORED BY REPRESENTATIVE LINDA SMITH (R-WASH) AND OTHER REPRESENTATIVES, IS AN EXCELLENT START IN THIS REGARD, AND WE ***STRONGLY*** URGE YOUR SUPPORT FOR THIS RESOLUTION. OTHER REFORMS THAT MERIT CONSIDERATION ARE: REDUCE THE COST OF CAMPAIGNS BY ***SHORTENING THE ELECTION CYCLE***; REPLACE THE ELECTORAL COLLEGE PROCESS FOR ELECTING THE PRESIDENT WITH ***A DIRECT VOTE*** FROM THE CITIZENS; AND ***PROHIBIT ANNOUNCEMENTS*** OF EXIT POLLS UNTIL ALL VOTING HAS BEEN COMPLETED IN HAWAII.

- ***TERM LIMITS:*** THIS ISSUE WILL NOT GO AWAY BECAUSE SO MANY PEOPLE ARE IN FAVOR OF IT. WE FAVOR NO MORE THAN ***TWO TERMS FOR SENATORS*** AND ***THREE TERMS FOR CONGRESSMEN***. IT WILL REQUIRE A CONSTITUTIONAL AMENDMENT THAT SHOULD BE PASSED BEFORE THE CHRISTMAS RECESS.

- ***CREATE A NEW NATIONAL TAX SYSTEM:*** THE CURRENT SYSTEM IS ANTIQUATED; FULL OF LOOPHOLES THAT APPEAR TO FAVOR LARGE MULTI-NATIONAL CORPORATIONS AND THE MORE AFFLUENT CITIZENS. A NEW TAX SYSTEM MUST BE FAIR; IT MUST BE PAPERLESS OR NEAR PAPERLESS; IT SHOULD RAISE ONLY THAT MONEY NEEDED TO PAY THE BILLS, AND THERE MUST BE A ***PROVISO*** THAT WOULD REQUIRE THAT ANY FUTURE ***TAX INCREASES*** UNDER THIS SYSTEM WOULD BE ***APPROVED BY THE PEOPLE*** IN THE NEXT FEDERAL ELECTION. THIS WOULD IMPOSE DISCIPLINE ON SPENDING.

- ***MEDICARE, MEDICAID, SOCIAL SECURITY:*** NO GOVERNMENT REFORM PROGRAM WOULD BE COMPLETE WITHOUT ADDRESSING THESE BIG SPENDERS. THERE MUST BE SUBSTANTIVE CHANGES IN THESE AREAS. THEY MUST ALL BE RIGOROUSLY REVIEWED, REASSESSED, AND REVISED. THEY MUST BE BASED UPON ***JUSTIFIABLE NEED, AFFORDABILITY, FAIRNESS, PERFORMANCE,*** AND ***MEASURABLE RESULTS.*** THESE AREAS CAN BE PRESERVED, IN A STREAMLINED FASHION, IF WE ALSO SERIOUSLY ADDRESS THE NEXT ITEM.

- ***CORPORATE WELFARE:*** WE MUST CHANGE THE FOREIGN TAX CREDIT FOR MULTI-NATIONAL CORPORATIONS TO A ***DEDUCTION.*** THAT SIMPLE STEP CAN SAVE BILLIONS OF DOLLARS. WE MUST ELIMINATE SOCIAL INTEREST DEDUCTIONS THAT HAVE NO SOCIAL BENEFITS AND FAVORABLE TAX TREATMENT OF CAPITAL GAINS. CLOSE ALL EXISTING LOOP-HOLES, AND FINALLY, ELIMINATE THAT DESPISED TAX DEDUCTION FOR TOBACCO ADVERTISEMENT – CURRENTLY AT 11.4 BILLION DOLLARS. THIS WILL NOT BE A FORMIDABLE TASK IF ELECTED OFFICIALS ARE PRECLUDED FROM RAISING CAMPAIGN FUNDS FROM SPECIAL INTEREST GROUPS AND/OR LOBBYISTS.

CONCLUSION:

MR. CHAIRMAN AND MEMBERS OF THIS COMMITTEE. PLEASE PERMIT A FEW CLOSING COMMENTS IN AN ATTEMPT TO PUT THE SUBJECT IN PROPER PERSPECTIVE.

IN NOVEMBER, 1994, THE AMERICAN PEOPLE SENT A ***RESOUNDING WAKE-UP CALL*** TO THE PRESIDENT AND MEMBERS OF CONGRESS. TODAY, IT APPEARS THAT TOO MANY OF THESE ELECTED OFFICIALS DID NOT HEED THE CALL. THE ***FAILURE*** OF THE ***BALANCED BUDGET AMENDMENT; REJECTION OF TERM LIMITS; THE PASSAGE OF NAFTA AND GATT/WTO BY A LAME DUCK CONGRESS***; AND THE ***PRESIDENT'S BAILOUT OF THE MEXICAN PESO***, ARE BUT FOUR EXAMPLES THAT LEAD US TO BELIEVE THAT THE MESSAGE WAS NOT RECEIVED.

WE MUST MAKE SURE, TODAY, THAT EVERYONE WHO SERVES IN THE EXECUTIVE, LEGISLATIVE AND JUDICIAL BRANCHES OF GOVERNMENT UNDERSTANDS THAT THEY ALL HAVE ***"A CONTRACT WITH AMERICA."*** ALL ***SWORE*** TO UPHOLD THE ***CONSTITUTION*** AND ***SERVE THE PEOPLE***. WE MUST, THEREFORE, HOLD THESE ***ELECTED*** AND APPOINTED ***SERVANTS ACCOUNTABLE*** FOR THEIR ACTIONS.

ALL OF US HAVE INVESTED TOO MUCH OF OUR LIVES AND FAR TOO MUCH BLOOD, SWEAT AND TEARS TO FAIL NOW. OUR CHILDREN, GRANDCHILDREN, AND FUTURE GENERATIONS ARE DEPENDING ON US.

THANK YOU FOR THIS OPPORTUNITY TO ADDRESS THESE CRUCIAL CONCERNS FOR AMERICA.

CRES C BACA
STATE DIRECTOR

CREATING A 21ST CENTURY GOVERNMENT

FRIDAY, OCTOBER 20, 1995

HOUSE OF REPRESENTATIVES,
COMMITTEE ON GOVERNMENT REFORM AND OVERSIGHT,
Charlotte, NC.

The committee met, pursuant to notice, at 10 a.m., in the Charlotte Mecklenburg Government Center, Meeting Chamber, 600 East 4th Street, Charlotte, NC, Hon. William F. Clinger (chairman of the committee) presiding.

Present: Representatives Bass, Davis, Fox, Gutknecht, Mica, Myrick, and Spratt.

Staff present: Diann Howland and Kimberly Cummings, professional staff members; Jonathan Yates, associate general counsel; Judith McCoy, chief clerk; and Denise Wilson, minority professional staff.

Mr. CLINGER. Good morning. This is the Committee on Government Reform and Oversight. This is our sixth hearing on what we call "Creating a 21st Century Government." Before I go further, I would like to thank a distinguished Member of Congress and this area's Representative, Sue Myrick, for hosting us today and for the work she and her staff have devoted to the hearing's success.

This morning the committee will hear from a number of distinguished witnesses who will share ideas on creating a leaner, more responsive Federal Government. Our main goal is to learn from their success stories and apply these lessons to our Federal Government priorities.

Our focus on Federal Government restructuring goes beyond just streamlining. It encompasses every function within our agencies, deciphering which functions are essential and which are no longer necessary. And we must step back from bureaucratic and inefficient Federal institutions and ask the questions that the private sector has been asking itself for years: What are the main functions of this organization, and can we effectively and efficiently meet the service delivery needs of our citizens well into the 21st century?

It is essential that we involve government in only the functions that it can perform well, and keep it out of functions that can be successfully delivered through private sector or State and local means. Today, there are 1,390 Federal domestic programs administered by 53 departments and establishments of the Federal Government. Ten years ago 52 Federal departments and agencies administered 1,013 Federal programs. The reality is that the Federal Government is too big and involved in too many functions to do them all well.

The problem, in my view, with government today is that it has become too large and inefficient, causing it to become less responsive to the service delivery needs of our citizens. The time is now for a complete top to bottom renovation and review of our Federal departments and agencies.

Our task as lawmakers is to create legislation that will innovate and transform the Federal Government hopefully into an efficient and responsive organization that will meet taxpayers' needs in the coming years. And the only way to reach this goal is with the support and input of the American people. With this partnership between lawmakers and citizens we can create a government that is responsive to the needs of the American people; efficient and effective, not wasteful; and able to use technology to enhance and augment its service to the people.

The witnesses appearing before us today all offer a unique perspective on the role they have played in restructuring their organizations. They have met the needs of an ever-changing environment and have innovative and thoughtful ideas to offer in our quest to downsize and reform our Federal institutions. Our hope is that the ideas we hear today can be effectively implemented in our Federal restructuring efforts.

It is our intention, through these field hearings, to take a step back from "politics as usual" in Washington and get in touch with the heart of our Nation, which is why we are here and why we have been, over the preceding months, in Cleveland and in New Jersey and Seattle, WA; Long Beach, CA; Albuquerque, NM; and now here in Charlotte. So we encourage your participation to assure that the approach we take on downsizing has your support and represents your ideas. I think particularly important is our open mic session which we will have today and which is intended to allow you to address us and tell us your views, and we very much look forward to hearing from those of you who would like to contribute to our deliberations.

With that, I want to thank the witnesses in advance for coming to testify today, I want to thank the audience who is here, and all my colleagues for taking time out from their very busy schedules to listen to what the people of North Carolina have to say.

Before I recognize the ranking member here today, I want to defer to our host, Congresswoman Myrick, who we want to thank again for providing such a lovely venue for us.

Sue, thank you.

[The prepared statements of Hon. Jon D. Fox and Hon. William J. Martini follow:]

OPENING STATEMENT
CONGRESSMAN JON D. FOX

COMMITTEE ON GOVERNMENT REFORM AND OVERSIGHT
OCTOBER 20, 1995

Mr. Chairman, I first want to thank my colleague, Congresswoman Sue Myrick, for hosting today's hearing. As fellow freshman, we are part of the revolution to make government smaller, more responsive, and less intrusive in our everyday lives. Congresswoman Myrick's leadership in this area, among others, is to be commended; the people of Charlotte are fortunate to have such an active representative in Washington.

Mr. Chairman, the United States is on a path of seeking better methods in meeting the needs of the American people so that both public and private institutions can deservedly receive people's confidence.

The American people have often complained of the intrusiveness of federal government, of inadequate performance, and of excessive expenditures. In light of these public concerns, the government has begun to turn to the creative talents and ingenuity of organizations, both public and private, to provide proposals to better address present and future challenges.

This hearing is imperative so that we may explore alternative approaches for administering many government programs and services to determine how they can be better managed in a more efficient and productive manner.

I look forward to hearing from the today's witnesses who will offer their suggestions and proposals of how the federal government can change the way it does business. We need a government that is smaller, less intrusive, and more responsive to the people it represents.

Opening Remarks for
Congressman Bill Martini
United States House of Representatives
Government Reform and Oversight Committee
Charlotte, North Carolina Field Hearing
"Creating a 21st Century Government"
October 21, 1995

Thank you Mr. Chairman.

Mr. Chairman, today the Federal Government stands at a crossroads.

For the first time in over two decades, we are on the brink of achieving a balanced federal budget.

The 104th Congress has clearly demonstrated a commitment to fiscal responsibility. This is evidenced by the historic reconciliation bill that will help us put a down-payment on America's future.

I believe that we have a moral obligation to balance the federal budget.

This is the right thing to do for our future, our children's future, and the future of generations to come.

Our message is simple: government must learn to exercise the same fiscal restraint that our households and our businesses operate under each and every day.

The problem is that there are many people in Washington that just don't get it. The naysayers are still afraid to make the tough choices today that will help us create a better tomorrow.

I come from a state where for the past two years the "chicken littles" have claimed that the sky is going to fall.

We have had a rare occurrence in New Jersey. We have a Governor who has eliminated two state departments, privatized several others, and reduced state spending.

Mr. Chairman, I can proudly tell you that the sky didn't fall in the Garden State, in fact the future of the Garden State has never looked better.

Six weeks ago this panel had the benefit of hearing from Governor Christine Todd Whitman and several other outstanding witnesses on how we in Washington can create a better Federal Government for the 21st century.

The purpose of these hearings is to begin a dialogue with the American people on how we can do things better.

The Committee has come here to Charlotte, North Carolina, because the ability to see beyond the beltway has been lost in Washington.

Mr. Chairman, while I am on the subject of the Tarheel State, I would like to take a moment to recognize my distinguished freshman colleague from North Carolina and praise her along with the Chairman for putting together this important event.

Sue Myrick has been a leader in the freshman class and voice of sensibility in the Congress. Congresswoman Myrick has led the freshman charge in the fight to balance the federal budget and to stem the tide of burdensome federal regulations.

I guess this should come as no surprise to the residents of the 9th District who had the benefit of seeing My colleague in action as the Mayor of Charlotte.

Mr. Chairman, for the last forty years, we have failed to question the effectiveness and the necessity of numerous federal programs. No one stops and asks which programs work, which don't, and which should be eliminated.

Instead, all to often when a program does not work we create a new one without eliminating the first, thereby creating another level in a limitless federal bureaucracy.

Speaker Gingrich has tasked this Committee with the awesome responsibility of changing this mindset in Government.

We must learn to look at things differently. We certainly need to respect the traditions of the past, but we must not be afraid to look at the possibilities of the future.

In an era of faxes, office automation, and the information superhighway, we must learn to adapt the technologies of tomorrow in the Federal Government of today.

If we are to remain a world leader we must set that standard for innovation and excellence. This is the essence of the "American spirit" that has enabled us to maintain the longest standing democracy this planet has ever known.

In every age, Americans have risen up to meet the challenges of the day.

Today the Federal Government faces a challenge. We no longer have the luxury of running up massive debts that will be paid by future generations.

The Federal Government must learn to do more with less. Technology will certainly provide some of the tools necessary to accomplish this.

Our goal must be to build on the principles of how we can most effectively provide Federal Government services that American people can count on.

In order to do this, we must listen carefully to the success stories of the individuals who will testify before this committee today.

I am confident that we now have the collective will in Congress to meet the challenge before this Committee.

Before I yield my time, I want to thank all the individuals who have taken time out of their busy schedules to be here with us today and I am eagerly awaiting your testimony.

I also want to thank the people of Charlotte and my colleague Congresswomen Myrick for their warm hospitality.

Mr. Chairman, I yield the balance of my time!

Mrs. MYRICK. Well, you are welcome. I am just delighted that the committee chose to come to Charlotte because I keep bragging on you all the time and letting you know how differently we do things here and the fact that for years we have been doing public/private ventures, and government has been innovative in the way that we have downsized and still maintained the necessary services with fewer people, and really doing things in a concise way. And years ago when we did an efficiency study of government, that was really a beginning of this whole process of the downsizing and the privatization. And I know some of you who are here today and are going to talk with us have been a part of that effort for a long time.

But we have really done housing differently, we have done a lot of things that other cities have not really attempted yet and the Federal Government has done none of. So I am very encouraged that you were willing to take your time and share with us and be a part of sharing these good ideas. Because I am of the thought that, you know, if we can do it here in Charlotte it can be done anywhere in the country, and it can certainly be done in Washington, DC. And so I am glad that everybody did take their time to come and be a part of this, and I welcome everybody.

I said I just hate the fact that they are going to have to turn around and go home as soon as they are finished and we are not going to be able to show them anything in the city, because we do have a lot to share with them. But maybe sometime.

You have an open invitation, all of you, to come back. Of course John here is very familiar because he is right down the road. John Spratt is our neighbor in South Carolina. I think most of you probably know that. And we are glad that John is here today as a part of the committee.

So with that I will turn it back to Chairman Clinger, and I just say thanks to all of you and please feel free to share with us anything that you would like.

Mr. CLINGER. Thank you very much, Sue. And now I would like to recognize the gentleman from South Carolina, a member of the committee, Mr. Spratt.

Mr. SPRATT. Thank you very much, Mr. Chairman. I did not realize I was going to be the ranking member. I appreciate the opportunity just to say a word, and along with Sue Myrick, to extend you a welcome because I feel as if I am home, too. I was born here in Charlotte, I went to Davidson College in Mecklenburg County, and I grew up reading "The Charlotte Observer" and watching Charlotte television, and am very much a part of the Charlotte metropolitan statistical area, which is more than just a statistical area. It is growing in a purposeful way to become a region where we all recognize our common interest and concerns.

I am very glad the committee has come here because this is a place where government works, and works well, and it works well because it works hand-in-glove with the private sector and with the people and their concerns. And this is the place where the Federal Government can come and learn how we can do a better job of running the country and to what extent we devolve responsibilities upon the local government.

I think this is and ought to be a bipartisan concern. This ought to be a subject to which both of us are committed and concerned,

and for that reason I am very pleased to take part in these hearings today.

Mr. CLINGER. Thank you very much, John. Does any other member have an opening statement? If not, I think we will move to our panel. Let me announce at the outset a couple of things. First of all, we will have an open mic session. And in order to be fair about it, because I am sure you who are voluntarily here would like to say something, we do have limited time so we are going to do a little lottery. And if you have not gotten a ticket, please do so because we will draw those at random when we get to the open mic session.

And the second thing I would note is that you will see members coming and going during the hearing. And that is not out of any sense of rudeness or disrespect, but many of them will have phone calls to take or whatever they will be doing during the course of the hearing. The most important person who is really here is sitting over here to the far right who is taking a transcript of this, and this will all become a part of our total hearing record and be available to all members of the committee when we get back to Washington.

And I have been reminded that I should introduce the other members of the panel who are with us today. Congressman Mica from the State of Florida, he is the chairman of the committee's Subcommittee on Civil Service. And next to him is Congressman Davis from the State of Virginia, who is the chairman of the Subcommittee on the District of Columbia. And to my right we have Congressman Bass from the great State of New Hampshire, a freshman member of the committee and a very valuable member of the committee. And last, but certainly not least, Congressman Gutknecht from the State of Minnesota, who is also a freshman member of the committee. So we have a very outstanding turnout. And here comes my fellow colleague from the great Commonwealth of Pennsylvania, Jon Fox, who is another freshman member of our committee. So we are delighted that he is joining us.

Actually you will be pleased to hear that I think of all the hearings we have had all across the country, this is the best attendance. So I think it speaks well of Charlotte that so many of my colleagues have chosen to come and participate in this hearing today.

It is now my pleasure to introduce our first panel of distinguished witnesses. And as I introduce them I would ask them to come forward to the witness table. First of all is Richard Vinroot, who is the mayor of the city of Charlotte, and who has held very distinguished positions in public sector careers, including service as a member of the Charlotte City Council from 1983 to 1991. Currently the mayor is a candidate for the Governor of the State of North Carolina. And we are very delighted, Mayor, that you could be with us this morning.

Our second member of this panel is Wendell White, the Charlotte city manager, who has held several distinguished public positions, including his tenure as commissioner of Virginia State Council on Criminal Justice, and as the vice chairman of the Virginia City—city/county manager, professional development committee. Under his leadership the city of Charlotte was recognized by "Business Month Magazine" as one of the 10 best managed cities in the United States in 1989.

Gentlemen, we welcome you both. It is a custom of this committee, as an oversight committee, to swear all witnesses, so as not to prejudice the rights of any witness. And if you have no objection, I would ask you if you would rise and we will ask you——

[Witnesses sworn.]

Mr. CLINGER. Thank you. Let the record indicate that the witnesses both indicated in the affirmative. And with that, Mayor, again welcome. We look forward to your testimony.

STATEMENTS OF RICHARD VINROOT, MAYOR, CHARLOTTE, NC; AND WENDELL WHITE, CITY MANAGER, CHARLOTTE, NC

Mr. VINROOT. Thank you, Mr. Chairman. And thank all of you for coming to Charlotte, and particularly Congresswoman Myrick and Congressman Spratt for being the welcoming Members of Congress here. We welcome you back to our region. We are all part of the 1,400,000 populated regions in which both of these fine Congressmen are Representatives.

Let me speak quickly and I hope to the point because I know you do have time limits. I want to talk in really four or five brief components. One, I want to talk about my biases as I came into the office of mayor of Charlotte. Second, I want to talk about some questions I asked as mayor that I think you should be asking as leaders of our Federal Government. Third, I want to tell you briefly about several task forces that we put together—that I put together as mayor of Charlotte. And then I want to tell you about the policies and the results of those task forces. And finally I want to brag just a little bit about some honors and awards that have come our city's way. I hope I can do that in the 5 minutes that is provided. The first thing——

Mr. CLINGER. We will not hold you to that strictly, Mayor, so——

Mr. VINROOT. Well, I will do my best, nonetheless, because I like to adhere to time limits. As I sit in your chair, for the most part, I am very tough on people on timing. Like to do as I say, not simply do the other way.

I came as mayor of Charlotte, a good city which had been well managed for many years, with these biases: One, that government is a service provider, not a job provider. Two, that jobs, not programs, are the best social service providers of solutions that we have. And third, that we in government—and I believe Abe Lincoln, if I may say so as a Republican mayor, said this many years ago—ought to do for our citizens what they cannot do for themselves, not those other things that we can provide for ourselves.

Fourth, I came with an idea—and this is a Presbyterian idea, and I think it is a Baptist idea and an idea of church people everywhere—of stewardship. That is, that we have limited resources and we have a responsibility to use them, and use them responsibly.

And finally, I happen to believe in something that I think is as American as apple pie, and that is competition. We go about our business talking about what is America. I am a lawyer and I say to people all over this State it would be nice to be the only lawyer in Charlotte. It would not be good for our citizens, it would not be good for the customers of law services. But it would be, I think, a way of lawyers simply doing whatever they want and charging whatever they wish. Competition is the reverse of that. It is the

reason we have good services and good products in this country. And I think competition as an idea is not simply for the business sector, but for the government sector to adhere to.

The questions I asked as mayor of Charlotte were these, essentially in broad terms: Why do we do this? Why are we providing these services? And why do we do this this way? Is there a better way to do what we are doing? And must we be doing the things that are simply on our books and part of our list of services that we have provided for many, many, many years? Do the citizens really want these things done for them now, even if they did at one time ask of their leaders that we do them?

I asked this question: What are our highest priorities and what are our least priorities? And how can we, as good stewards, do those things best and well that are our highest priorities and find ways to stop doing those things that no longer are a priority to the citizens that pay the taxes for those services? And finally and ultimately: How can we provide the best service at the least cost for our citizens?

When I was mayor and elected mayor 4 years ago I followed into the footsteps of Sue Myrick, who was an excellent mayor of this community. I appointed four different task forces to look at our government with a view toward dealing with my biases and my questions. The first group that we appointed was an organizational task force headed by a man who is president of Nucor Steel Co. I do not know what you know about steel, but the steel business has not been very successful over the last 25 years with one exception. The steel company has never ceased to make a profit in every year of its operation, and one of the best steel companies, one of the best corporations in America is Nucor Steel.

They have an office—their home office here in Charlotte. If you walk in they have three people there: the chairman of the board, the president, and a receptionist. That is their office. They are the flattest organization I think in the world, or at least one of those. And one of the reasons they are so successful is the fact that they are in fact concerned about the structure in which they do business. And I asked that committee to look at the structure of government: How flat are we? How wide are we? Are we set up to be a competitive business in a new era of politics?

The second committee I appointed was a compensation and benefits committee to look at the way we pay our labor force to do what they do. I do not believe that tenure and paying people for how long they have been part of an organization is a very businesslike way of asking people to do what they do for our citizens. I believe that performance pays, and rewarding people who perform best is a better system. And we brought in a compensation and benefits task force to look at how we paid and how we compensated our people.

Third, we brought in a group of people to look at and evaluate the 41 or 42 services rendered by this city, and evaluate them and actually ask our citizens and our leaders which ones are important, which ones are not, and begin to make an effort to stop doing the things on the low end, and use those resources to do better the things on the top end.

And finally, and maybe the one that was given the most publicity, is a privatization task force to look at how we could bring competition into city hall.

And we have had these results. We have in fact gone to a performance pay system in our city. It has not been popular with everyone but it—and it is not yet perfected, but it is a performance pay system. And I had the pleasure about 3 weeks ago of handing out bonuses to those best performers in our city government. In many cases the best people are the ones who are happiest with the new system.

We also have reduced our structure from some 26 departments of city hall to 13, 9 of which perform key services, the most important services we provide, and 4 of which are the support services. We have, I might add, reduced our workforce by some 700 people in the last 4 years, and at the same time increased our police force by some 261 people in the last 2 years. We have put $10 million more into public safety the last year without raising taxes for the 8th or 9th straight year. We, I think, are the only city in this State, maybe the only city in America of any size that has not raised property taxes in about 8 years, and has committed to not do so for a full decade.

And we have I think what might be called rampant competition, or at least a feeling that this is a wave that has reached our city and ought to reach this country. And I noticed this morning one of the local newspapers had a full column on "Privatization Is A Holy Grail and Sometimes It Even Works," talking about the things that we are doing in this city to bring privatization to every element of city government. It is the watchword of our current campaign for mayor and city council as I go out of office and watch, and it is something that we really do believe in in this community.

I think we are regarded by the Reason Foundation as one of the three most privatized or at least the most committed to privatization cities in America, the other two being Phoenix and Indianapolis. And it is working here and it will work even better in the future, I am confident.

Let me brag for a minute as I conclude my remarks. We believe in cooperation. We are pushing hard to relate to our surrounding regional cities and counties to cooperate in figuring out how we can best deal with waste treatment. John, I was in York County just about 8 months ago talking to 300 people about us trying to create a waste treatment plant in York County to serve three or four counties who are depending on the same systems of water to treat their waste, and why it would not be better to put that facility, that serves these three or four counties, in York County because God actually sent the rivers that way, instead of putting it at the top of the river in Mecklenburg or Cabarrus or Gaston Counties.

Mr. SPRATT. Everybody upstream is in favor of it; everybody downstream—[laughter.]

Mr. VINROOT. Yes, sir. They did not want it to come that way, and I said I think God will—decided to send it that way; we must figure out a way to deal with it.

Mrs. MYRICK. That has been going on forever. [Laughter.]

Mr. VINROOT. We also believe in consolidation, and we are working closely with our county organization to consolidate approxi-

mately—virtually everything we do so that we do not have two governments providing the same services in the same building on the same day at the same time. And we are even talking about and I hope we will seriously consider and in fact consolidate city and county governments, themselves, in a referendum scheduled for November of next year. And we believe in partnerships with our private sector, about which you will hear more about in a minute.

Let me brag just for a minute, as I stop. This city last year had 14,000 new jobs in the city limits of Charlotte, more than any city of America. We were called by the U.S. Conference of Mayors in June of this year America's Most Livable City—Most Livable Large City. And we were called by "Fortune Magazine" last year as the most pro-business city in America. And we were called by a man named David Rusk, who is writing about the health of cities, by a series of analyses, America's Healthiest City.

I believe that those—if they are true or not I cannot tell you. Other people say that about us. But I will tell you this: There are things going on here that are right. There are things going on here that are right for America and right for our Federal Government. And they have to do with the same basic values that I alluded to earlier.

Competition. We want our workforces to compete for the right to pick up our garbage. We want our workforces to compete for the right to pave our streets, build our sewer systems, and provide services. Why? Because we are providing a service for our customers who really do not care who does it for them, they want to be sure it gets done and gets done well. And they want to be sure it gets done at the most efficient price possible. You cannot do that if you do not ask the questions of yourself: Are we competitive? Are we providing the best service at the most competitive price? And you will never know that unless you put it up for bid.

Wendell I think will talk more about this, but I believe he has estimated that now something like 46 percent of what we do in the city, outside of law enforcement which is almost exclusively a public service, is done through private competition—competition with the private sector. I think that you can learn a lot from cities like Charlotte. I do not suggest that everybody has the same mix. I know that there are cities that have serious problems that my solutions may not apply to, but I think we are on the right track and I hope that you learn a lot from the good folks you will hear from in just a few minutes.

Wendell White is our city manager. He has done an excellent job. Bill James, who you will hear from, is the man that I appointed to head our Privatization Oversight Committee, and both of them know a great deal about the details of some of the broader concepts I discussed. Thank you very much for listening to me. Thank you for coming to Charlotte.

Mr. CLINGER. Thank you very much, Mayor. And as you said, you are clearly doing something very right in the city of Charlotte and it is a remarkable record. I think we will defer questions until we have heard from City Manager White.

Mr. White.

Mr. WHITE. Mr. Chairman, I am very pleased to visit with you this morning. In thinking about coming into this meeting—basi-

cally we have been working about 5 years trying to do what the mayor has summarized for you and it seemed an impossible task to talk about 5 years of my life and that of this organization and do it in 5 minutes. So first of all, let me agree with everything the mayor said. [Laughter.]

Mr. VINROOT. I will be leaving office in about 3 weeks. You can stop agreeing with me. [Laughter.]

Mr. WHITE. And second, in terms of the advice, I want to say that first—you suggested it—I think what the mayor said is appropriate, and that is that the Federal Government should take a very serious look at the activities you are involved in, keep in mind the top priorities, and then get out of a number of activities and turn a lot of that loose so that people in the States and the communities can deal with them and prioritize based upon the local needs. And then you get real differences across the country. If you want it all homogenized you should not do what I am saying. But if you want to see innovation, give us in the communities a shot at it. And that would be the one point.

The other point is—and I do not know how in the world you do this in such a system like the Federal Government is—but it takes persistence and determination every day to change. And I do not know how you do that. It is difficult enough from where I sit. But that would be my recommendation.

I will just say a few words and hopefully we can have a few questions we can answer. Charlotte is a success story. And I am serving at the pleasure of the mayor and the council, and observed by the community almost on a constant basis. We could not do anything that we do in Charlotte, if we did not work in harmony with the mayor and council and understand their priorities and move solidly in the direction in which they suggest. Nor could we in Charlotte make an impression on the problems without the help and cooperation of neighborhood groups, and particularly our business community. And we do have a partnership there. And each time the mayor asks for help from any business person, we get it.

So all of our success really is tied to that; a willingness for the bureaucracy, headed by a professional manager, to pay attention to the political and elected leadership of the community. That is a key. And then also to work in harmony in the community and to translate in an effective way the problems that we are working on, and seek the solutions then from the entire community.

One of the most interesting things I have had happen, happened a few days ago when one of our police units, in cooperation with the Federal Government as well, conducted a raid in a neighborhood that is not a bad neighborhood but a fragile neighborhood right now. And in that morning when they went in to pull the drug dealers out of that community, also accompanying our police officers were people from our neighborhood services and people from the county, Social Services Department, and Recreation and Parks Department, and indeed our sanitation workers going in and cleaning up the neighborhood physically.

And I believe, sir, and ladies and gentlemen, that our future will be more secure if we work from a neighborhood up, rather from the top down, just like it is being done in business all across the coun-

try and indeed the world. And so that is our bias, and I believe in it.

We have had 9 consecutive years without a property tax increase, and that is our primary source of revenue. That is difficult when you have a growing city, but we have done that. We have added approximately 260 police officers in the past 2 or 3 years because that is the top priority in this city, of public safety. And at the same time we have reduced some 600 plus positions in the rest of the organization to accommodate that change. That is what right-sizing is all about; moving toward the primary areas. And as the mayor said, we are doing it through a combination of ways. And part of that is getting the workforce involved completely in finding ways to make these changes, and we have done that.

We have a tradition of long-range planning, financial planning, including 2-year budgets, a 5-year capital plan, and it is all based on a 10-year needs assessment. We have focused the role of government and invited partnerships where possible. In 1992, we asked the question: If we were to design the city government anew, what would it look like? And that is what the mayor is referring to. When we moved from 26 departments, independent, doing it on their own, to 9 key businesses with an integrated approach and a small enough group that the manager can coordinate that and make sure that we were working together.

The focus of customer relations is extremely important. If we are going to make it we have to convince the community, its citizens, and those inside the organization that we are going to be customer friendly, and we are putting a lot of effort there.

We know that the workforce has to train and has to continue to learn and grow or it will not do a good job. And so we use a lot of training these days, and we are moving toward technical advantages, computers and good equipment to do our job. Those are good investments.

Finally, I will touch on what the mayor said. I like the idea of checking out how the private sector is doing things. I do not have a hesitancy at all at thinking that we can learn from them and do it as well as they can.

One final illustration and I will close. It is a small matter. We benchmarked on the way we trim trees. We looked to see how the private sector was doing it based on the way we were doing it. Our crews went up in the trees, you know, and the private sector group goes up in the trees, right? Well, we thought we can beat them. So we quietly put our little bid on the table but we did not say anything about it. We did not win, and so we wanted to find out why.

What we found out was—and it is very understandable—when our crews go up in the trees they are not coming out of that tree till they get every piece of dead wood out of it. So the standard was perfection. Why would that be? Because the lady who is near that tree is going to call the mayor and say send them back out here. They have not done the job. So our standard was very, very high, but not necessarily good for the whole community. So that is the way you learn. I thought I would end on that kind of funny note, and be happy to try to answer your questions if I could.

[The prepared statement of Mr. White follows:]

U. S. House of Representatives
Committee on Government Reform and Oversight

O. Wendell White, City Manager
City of Charlotte, North Carolina

October 20, 1995

I. CHARLOTTE SUCCESS STORY

A. Nine consecutive years without an increase in the City's property tax rate (the City's primary revenue source for general operations).

B. Addition of approximately 260 police officers in the past three years to implement our Community Safety Plan (a comprehensive plan to address one of our community's priority area).

C. Reduction of approximately 680 positions in the same time period in non-public safety service areas.

D. Continuation of successful public-private partnerships including the new Carolinas Stadium (for the NFL Carolina Panthers), a transit center built and financed by NationsBank, a community center by First Union, and so on.

E. Continuation of City-County consolidations and regional partnerships to provide services efficiently and address community-wide service issues. In the past three years we have consolidated Parks and Recreation services with Mecklenburg County government and Police services under Charlotte City government.

F. Efforts to focus on solving problems at the neighborhood level including our community policing efforts and reorganizing our services around the needs of neighborhoods. Our "City-within-a-City" efforts are an example of this focus.

II. HOW HAVE WE DONE IT?

A. We Have a Long-term Approach to Planning and Change

1. We have a tradition of long-range financial planning, including:
   * a two-year operating budget plan
   * a five-year capital improvement plan (for infrastructure)
   * a ten-year capital needs assessment

2. We recognize that there are no quick fixes or instant solutions.

3. We began our process to change our organization over four years ago.

4. We recognize that to change organizations and to sustain change requires changing the systems within the organization. For example, we have changed our human resource systems (classification, compensation and benefits), and some of our procurement and financial systems. We are in the process of implementing activity-based-costing and management.

B. We Have Focused on the Role of Government and Invite Partnerships Whenever Possible

1. In 1992, we asked ourselves the question: "If we were to design City Government anew today, what would it look like?"

2. In 1993, we reorganized Charlotte City government around nine key businesses.

3. We continue to look to others (our partnerships) to help us address community needs. It's an acknowledgement that improving our community and solving public problems is not a job which government can and should do alone. Partnerships come in all shapes and sizes:

* It's partnering with the private sector
* It's joint purchasing agreements with other jurisdictions
* It's consolidating services with other jurisdictions
* It's working with churches, neighborhood associations, and not for profit agencies

C. We Focus on the Citizen/Customer and the Results We are Expected to Deliver

1. Our measurement systems focus on outcomes or the results we are striving to achieve.

2. Serving the customer is recognized as a key to our success.

D. We Acknowledge and Understand that to be Successful Requires the Involvement and Commitment of Our Workforce

E. We Pursue a Variety of Strategies to Ensure "Best Service at Lowest Possible Cost"

1. Privatization (or outsourcing) is used when it is recognized that the private sector can deliver the service at a lower cost, or when the service is not a core function of the City.

2. Competition (between the private sector and City employees) is used to determine the service provider when the service is available in the marketplace.

3. Technology is readily used and deployed to improve operations and customer service and to reduce the need for on-going labor costs.

4. Incentives are used to promote annual cost savings.

Mr. CLINGER. Thank you very much, Mr. White and both of you gentlemen. We appreciate your testimony. I ask Mrs. Myrick if she——

Mrs. MYRICK. I think that one of the key points you made was the city departments bidding on the services. And that was really crucial in how you went about this whole thing. I would like you to elaborate on two things. One, how you worked with the employees to get them to accept this change and be a very aggressive part of the change, because that is really important with what we are doing in the Federal Government. How internally do you make this happen with the people who are there?

And then the second thing I would like you to elaborate on is the total concept of community in cleaning up the neighborhoods, how we bring everybody together to bring up a neighborhood. It is not just the police going in and—if you would not mind doing that.

Mr. WHITE. OK. The—first of all, when I said that it is important that whoever is in charge—and in this case you have political leadership from the mayor and council, and then you have the city manager. And it is extremely important that the workforce understand that this is what we are going to do. That we are going to change the way we do things. And so we have tried to be very consistent in that message.

The second thing I would say is as you start, Mrs. Myrick, to ask employees, "How would you do it if you were in charge?" you get some pretty good answers. And they want to feel that they can do it as well as the next guy. We are also getting very comfortable with simply outsourcing. When we discover that there is a better way—for example, today we are getting our fuel out in the commercial community. Think about it. In a city with all the traffic that we have and very large in boundaries, why should we send our police and our garbage trucks to three or four different locations to get fuel when I can get it out there, get the pricing system and the records done to perfection, why should we do that. And so now we have mini-stations that we can go to, so we are outsourcing. That is the way I would answer it.

Mr. VINROOT. Let me add a point or two. I have had people come to me and say, "Gosh, you are going to take my job and you are going to contract it out."

And I said, "Oh, no, we are going to put you in competition with somebody outside the city, and why should you lose? You have been doing it 10, 15, 20 years. You know how to do it. Two, we do not pay taxes. You are a non-taxable entity. Your competition does. We do not have to pay dividends to shareholders to make a profit. You have that advantage. If you lose, you are losing because you are not doing it as well as somebody else who has got some disadvantages you do not have. Why do you not go beat them, and if you cannot, then you deserve to lose." Well, having had—people are much more common-sensical I think than we give them credit for being. That is the way in which we are doing it.

The second thing, as Wendell alluded to, is we do ask them; you would be surprised how many city employees do know the better way to do things but are being hamstrung by some superiors who want to do it the way they want to do it. An awful lot of people that I have talked to in the city hall post-competition, even after

losing the bids and even as they find ways to—and we have moved a lot of folks. We have essentially banked all of our terminated or people who leave employment as they reach certain retirement levels, we have banked all those positions. We have also given opportunities to retrain a lot of people who have been displaced through competition, to move into our higher priority areas. That makes it a lot less painful. But we have not—I want to say this, and Bill will say it earlier—later. We have not required our competitors either to hire our workforce, nor have we required our competitors on the outside to have the same benefit levels that we have and things that one might do. That does not work in my law firm. I do not have to—I am not able to tell my competition how many paralegals to hire and what rates to charge, and we are not going to do that to the private sector that we compete with, either.

The second question was: How do we get the community involved in things like cleanup. We have developed something that we call our City Within a City concept. Truth is if you look at Charlotte statistically it is a glowing success story. Very low unemployment on almost every—I will not go into my chamber of commerce speech, but take my word for it, it is in fact a very healthy city. But if you isolate what we call our City Within a City it has the same statistical problems of Philadelphia, Baltimore, Detroit, Cleveland, you name the city; in terms of unemployment, crime, kids dropping out of school and the like.

We have made a conscious effort to try to find ways to bring the private sector, the city, every element of our community that is successful into those communities to find ways to give them job opportunities. We have tried to find ways to take our police forces and all of our other forces that serve in those communities and make them holistic—I think is the—is the word now—community people and to have community concerns.

So I get calls from police officers about streets that are not clean. That never happened before. Police officers would call about crimes and things we were not doing to deal with crimes. We now have our city and county social services working closely with police officers, working closely with public housing officials. We have put all the folks together who deal with that City Within a City and made them cooperate and begin to think about each other's responsibilities and not simply their own specific responsibility, and it is working.

I took a Federal judge who was visiting here a couple of months ago from eastern North Carolina, he wanted—he called me 1 day, he said, "I want to see the worst part of your community." And I took him, in terms of its social problems, "because I am down here holding court and I am seeing a lot of the folks that come into this courthouse from that part of the community as well as others because I want to see how bad it is." I took him into what one might have called the most low income and the most difficult part of our community. And his reaction was, "My gosh, what a nice, clean inner city. This is redeemable. This is a place where there can be hope for solutions." I must say I have been to some other cities in this country where I really would not have that kind of confidence. But we have worked hard to try to clean up the environment,

knowing that is the first step in giving the people who live there a chance to succeed.

Mr. CLINGER. Thank you. The gentleman from South Carolina, Mr. Spratt.

Mr. SPRATT. Thank you very much for the excellent testimony. I think in your self-effacing way, both of you, you failed to acknowledge one thing that accounts for much of your success here, and that is that Charlotte-Mecklenburg have a longstanding tradition of attracting extremely able people to local government, and those leaders, in turn, have a longstanding tradition of hiring extremely capable people for administrative management of local government. That is part of the solution.

In addition, I think you have had a very healthy tradition of leading members of your private sector taking part in public affairs in this county, regarding it as their duty, as part of their responsibility. And yet you have not become elitists. This is very much still a participatory governmental situation and that is something that you can be proud of. And I think it is probably the crowning reason that all this works so well and that you keep on trying to perfect what you are doing. And I accept everything you have said about your city because I am pleased to live in this metropolitan area.

But we do have a problem here. A lot of people say to me, "I would like to come to Washington, but there is so much crime up there." And I tell them you should look at the statistics. Charlotte and Atlanta are not far behind Washington, DC, when it comes to violent crimes per capita.

We enacted a program a couple of years ago called the Community Policing Program in which we took the gains from downsizing the Federal Government by 272,900 Civil Service billets, put those gains, as they accrued, in a trust account, and we made them available through this community servicing police program, Cops on the Beat, to local communities. I am curious as to whether or not Charlotte-Mecklenburg has participated in that program; and if so, if you have seen worthwhile results from it.

Mr. VINROOT. Yes.

Mr. WHITE. Yes, we have. And it was a welcome shot in the arm considering the resources that we had and how much more we needed. And of course it fit exactly where the mayor and council's priorities were. And in terms of community-based policing, I would like you to know, sir, that I think the way we are doing it is being recognized around the country as the way to do it. We have, in support of our program, a thorough 5-year community safety plan that again is integrated and well thought out and not just a police officer's plan, to give us a way of first having our specific objectives known, and then we will be evaluating and seeing how we are doing on that. We took that plan to the city manager's conference last year, about 200 copies, and they were snatched up rather quickly because people have not taken the time to do that. But yes, indeed, what you have done there has been very helpful to us.

Mr. VINROOT. I agree with that. I would add one, at least, qualification. I do not think that the idea on Congress' part of essentially divvying out pro rata cops to cities based on population or crime or whatever is the way to do it, finally, however. There are—

we had already committed in this city to hire, as we have already talked about, I think 261 more police over the last 2 years because of our commitment to that. And I think we got 28 cops out of the program that you referred to. Truth is, we would have enjoyed I think even more total flexibility to have taken whatever resources you wish to make available to us; buy computers, buy this, buy that. And that freedom I think would have been—although I am not complaining, I simply want to tell you that from my perspective we, having already committed to hire a large number of police officers, adding 28 more was probably not the best use on our part of those resources. We probably could have found a better long-term use for those resources. That is not in the way of a—I am not complaining or I am not telling you we are not thankful.

Mr. SPRATT. I understand what you are saying.

Mr. VINROOT. I am simply saying if you want to do even better, next time give us total flexibility, you know.

Mr. SPRATT. Thank you very much.

Mr. CLINGER. I am prepared to recognize any other members who have questions. Mister——

Mr. MICA. Thank you, Mr. Chairman. Overseeing the Federal workforce from the House side is quite a challenge. I have only had that responsibility for the past, say, 10 months. And one of the things that amazes me is nobody in the Federal Government workforce ever gets fired. And you said you managed to do away with 200 positions. Were they RIFs, were they layoffs, were—how did you handle that? And how do you deal with core performers, and do you have any model that we can use or adopt? We have a serious problem we are looking at in trying to find some way to deal with poor performance. I heard your reward system, but I need to know the other——

Mr. VINROOT. Well, let me—I am going to let Wendell answer that question. First of all, the number is more like 700. I think 680, 681 over the last 3½ years. And I want to tell you, it does not come easy. I got reelected 2 years ago and I can tell you there were little things in the elevator, little signs up saying, "Do not reelect this guy. Through his competition zeal and other things he is trying to get your job." So it was not a popular idea with everyone.

Mr. MICA. Mr. Davis, you might want to listen to this.

Mr. VINROOT. It was not a popular idea with everyone, but I want to tell you that I was reelected by about 70 percent of the vote and I am satisfied an awful lot of those people who supported me work for this city, who are mighty good performers, and who recognize that the ideas that I was bringing to the table were not alien to their own way of thinking at all. Now I am going to let Wendell tell you how he had to deal with the tougher job of being the manager of the workforce, working for this mayor who had these crazy ideas.

Mr. WHITE. Thank you, Mayor.

The first thing we did, we asked the mayor and council for 18—we asked for 2 years. They gave us 18 months to get our act together. And during that period of time we froze all hirings and we set about trying to anticipate where our governing board would want to be and how we would assign personnel. That is the right-sizing aspect to cover that.

Well, you cannot transfer folks from my office into the police service so you still have a problem. But over a period of time we were able to match vacancies with those folks who were interested in continuing to work. And so the first couple of years we got over 200—I think it was something like 260. But now, over a longer period of time, as the mayor said, we are over 600. And we have done just about all of that without a layoff.

Now, what I have said to our managers is be very honest when you evaluate employees, because if you continue to move folks around and are not real careful with your evaluations and honest, then your workforce will deteriorate in terms of ability to perform the task.

And you heard me talk about training and all that. And we are doing all right. In other words, I think the employees that I have to worry about are the ones that just cannot get along with the idea of change. If they are willing to think in terms of "I can do—I can learn something new, I can—I can change," I believe we can succeed with them.

And in this room I would meet once a month with our key managers and I would have an open question time in which employees—we had about maybe 200 in here—could give me questions without signing their name on it. Some of it, as you might imagine, were just about as rough as the mayor saw in the elevator, you know. But over a period of time, in sharing with them what we were trying to do and communicating as well as we possibly could, I think we have a stronger organization today than we did before. I am not going to sit here and tell you that this is fun. It is really, really painful. But it can be done and it just has to be done.

Mr. VINROOT. Let me give you a——

Mr. MICA. I still want to know more of how you deal with the poor performers, the ones that should be fired, and how you get rid of them. And one of the problems we have in the Federal Government is an endless appeal process. It goes on and on so no one even attempts it anymore.

Mr. WHITE. Well, we have not adopted everything that you have from Washington, but it is painful for our managers, as well. But you—if you have a situation like that you have to sit down, and in our case we tell the employee how they are doing. And we say if it continues this way it is not going to work out.

I find also that employees, just by natural selection, will say, "I am out of here." We also did some early retirements. We have done every—and by the way, the mayor and council have been very supportive in allowing us to use our imaginations and to follow good private sector approaches to those questions. I know I can only imagine what it is like for what you are dealing with.

Mr. VINROOT. Let me add a context, though. Duke Power Co. is I think one of the one or two most efficient power companies in America. I know that. A cab driver out in Oregon told me that when I got out of the cab. [Laughter.]

And he said you are from—I said, "I am from Charlotte."

He said, "Oh, that is where Duke Power Co. provides the most efficient power in the country." Duke Power Co. last week laid off 2,000 people as I recall, and it was a very difficult decision, I know, for Bill Grigg and others there. But that is——

Mrs. MYRICK. That is not the first time, either.

Mr. VINROOT. That is a very good power company in a community that has a lot of other job options for people who work for the power company. We are a city providing a service to our taxpayers in a very good community with a lot of other options. I have already said that I came in with a bias that we are a service provider, not a job provider. With all due respect, that is why we formed our government, not to create the last resort job opportunity in this community.

And I would say the same thing is true for the Federal Government. We as taxpayers asked you to perform certain services; we did not ask you to remain moribund and continue to employ anybody who has ever worked for the Federal Government.

I do not think Bill Grigg has any easier answer to that question than do I. He is simply in business to provide a power service as efficiently as possible, and that often means making some very tough decisions.

Mr. CLINGER. The gentleman's time has——

Mr. WHITE. May I have just one more moment on that, sir. You either have a negative philosophy or a positive philosophy toward people. My philosophy is and has to be, when working with a force of 5,000, you have to develop trust and you have to believe that people, if given the opportunity, want to do well, especially after getting past 20 or 25 years old. So if you indeed instill in the organization, "Here is what we are trying to do, here are our priorities as set by the council," and then our work plans from the key business leaders of our nine key businesses down through the organization, everybody has to identify with the mission of the organization as set, in final analysis, by the council. And if you do that, you can turn it around. But yours is so massive I would not know how to tell you to do that. But—so I—I suppose the key is to—again, what is our mission, what are we going to do, and what areas are we going to get out of, rather than the other way around.

Mr. CLINGER. The gentleman's time has expired.

Mr. Bass.

Mr. BASS. Thank you very much, Mr. Chairman.

Mayor Vinroot, it seems that the mayor's seat is a springboard for higher office. And I heard in your introduction that you were potentially or a declared candidate for Governor of North Carolina. And perhaps the model of State government is a little closer to that of the Federal Government, with the legislature and its committees and a civil service system, I assume. I would not be surprised if there were budget problems on a Statewide basis.

My question to you, Mr. Mayor, is what models can you bring from Charlotte, from your experience as mayor of Charlotte, to the State of North Carolina that would be applicable to us as Federal policymakers in dealing with the issues that we face in the Federal Government, which I suspect parallel somewhat those issues that are being faced by North Carolina?

Mr. VINROOT. Well, first of all, I reject the idea that somehow what we are doing here is just an exceptional situation that cannot be translated into Statewide and Federal action. I just reject that. I do not think that we ought to look at what is going on here as some aberration. This ought to be the norm. And I fully intend,

when I am successful, to ask the same questions of our State government: Why do we do this? Is it really a priority? And why do we do it this way? And I fully intend to turn our State government upside down in asking those questions, and I fully expect to get the same kind of reaction from people there that I got from some of the folks here who perhaps will be glad I am gone from this position.

But I think that is what our citizens and our taxpayers expect. And I do not think we are—I am a Republican. I want to apologize to you who are not. But I do not think we are in some sort of partisan trend. I think this is a bipartisan trend in which we expect more of the IBMs of the world. That is why it has such great competitors now and is no longer the dominant force in its industry. And we expect more of the cities of Charlotte and the States of North and South Carolina and others.

And we are not going to sit back as taxpayers and tolerate simply grow it and let it do whatever it wants to do. And I think if I am not there to do it, somebody else will be there to do it and ask the same question. That is my sort of general answer to your rather pointed question. I think this is going to happen and it is going to keep happening, no matter who the majority is in Congress, really.

Mr. BASS. Thank you, Mr. Chairman.

Mr. CLINGER. Thank you very much. Before I call on Mr. Davis, I would remind you again that he is the chairman of the DC Subcommittee, and Congress has a unique relationship with the District of Columbia, the city of Washington, which has been both an exciting challenge and a frustrating challenge.

They tell the story, and we are talking about downsizing here and so forth, but Mayor Barry was out surveying the situation and came across a work crew. And one fellow was digging a hole in the ground, piling up the dirt, and then as soon as he got done with that the other fellow would put the dirt back into the hole. And the mayor inquired as to why they were doing this. And the fellow explained, he said, "Well, you know, Mayor, we have downsized and the fellow that used to plant the trees was RIF'd." [Laughter.]

So we can relate to some of the problems.

Mr. Davis.

Mr. DAVIS. Mr. Clinger, I make no comment on that as I have to maintain good relations on all sides. And before I was elected to Congress, I was the chairman of the county board—similar to the mayor's role in Charlotte—in Fairfax County, which is right across the river.

I had a couple of questions. First of all, I think that both your presentations were excellent in terms of innovation and partnerships and being decisive and setting priorities. That is what local government and the Federal Government ought to be all about. We try to set priorities for everybody and be all things, and you cannot do that given limited resources. And I think you have really set a standard here in Charlotte over the years and maintained that, and I congratulate you on that.

On the employment issues, is there collective bargaining for public employees in North Carolina?

Mr. VINROOT. Public employees cannot be members of a union.

Mr. DAVIS. OK.

Mr. VINROOT. We have had to deal with that——

Mr. DAVIS. Well, they can join but they are not—they can join a union, but the union is not given the——

Mr. VINROOT. I beg your pardon. We cannot negotiate with them as a——

Mr. DAVIS. Right.

Mr. VINROOT. And there in fact are equivalent to public employee unions in this city. And when we have had to deal with them, for example, in our public transportation system, we simply—in years before I got here—what is the right word? We have sold the public transportation system and now it is operated privately.

Mr. DAVIS. Well, we had the—we are a right-to-work State and also have no collective—that makes a huge difference when I talk to some of my colleagues from other areas of the country that end up being strapped in their ability to downsize, to make the kind of innovations that Mr. Mica talked about. But I think they are good laws and I congratulate you on maintaining those.

I was interested in your—in the public-private partnerships which I think are so successful to making any community run. And the partnership that Charlotte has built with its business community, I think that is—that has really been a role model for the rest of the country. I am particularly intrigued by your ability to attract professional sports teams, get the franchises here, and build the stadiums. Could you amplify on some of that that went through? And I will tell you I have a hidden agenda. We are trying to get a major league baseball team in northern Virginia at this point, and are struggling over how to best build a stadium. And in Washington, DC, they have just formed a public-private partnership with the owner of the Bullets and Caps and they are building a new center down there, privately constructed.

Mr. VINROOT. Let me do this two ways. I want to pick up on the first thing you said. And I want to, particularly with John sitting here, say this. We have an unbelievable culture here in our private sector. I had a conversation with his brother-in-law, who is the chairman of the board of one of the largest banks in America, back before the first of the year. We talked about the needs of public transit here and how we needed a public transit facility to give people who had choices not to ride a bus an incentive to ride a bus and to get on our transit system, and to give better service to those who were dependent on public transit. And he said, "Why do we not have a public transit center?"

I said, "Because we have not got the budget to do it. It is probably a $5 to $10 million expense." Do you know we are building up here, two blocks from where you sit, a public transit facility on private—on public land worth about $8 million, a public transit facility that is costing about $10 million being paid for by NationsBank because of their commitment to helping us improve public transportation. I doubt there is a mayor in the country with a corporation who has stepped up and said, "We will build your public transit facility."

Second story: We defeated a bond issue about a year ago to improve and expand our public recreation facilities. I called Ed Crutchfield, the chairman of the board of First Union Bank, and said, "We badly need a public recreation facility in one of our poor

communities in the inner city and we do not have the money to do it. Would you do it?" They are building it, a private expended public recreation facility.

We have drug houses in this city. I called on the bar association of our city to ask the private bar to help us bring private nuisance lawsuits to shut down drug houses. Do you know that 22 law firms in our city have volunteered to take on, pro bono, one drug house per year at their expense. I think that is about a $2 million commitment to our city by the private bar of this community. That is to sort of expand on the partnership.

Mr. DAVIS. That is in addition to providing the jobs in the——

Mr. VINROOT. Yes.

Mr. DAVIS [continuing]. In the tax base.

Mr. VINROOT. Yes. Same NationsBank is committed to take 100 jobs to our largest public housing community this year and make them available, first crack, to people from that community, if we, the city, will train them for those job opportunities.

Let me get back to sports.

Mr. DAVIS. Well, no, I think that is very good for the members to hear.

Mr. VINROOT. But you have got to ask. The mayor has got to ask, the President has got to ask, the Governor has got to ask.

Mr. DAVIS. Well, if you did not have——

Mr. VINROOT. And you have got to have a people who will respond.

Mr. DAVIS. If you did not have a good business climate and a partnership mentality you could not do those things, either.

Mr. VINROOT. But let me go back to your sports question. We are building a—we are very proud of the new Panther stadium here, but we are not paying for it. It is being paid for by the people who buy tickets to those games. I am one of them.

We provided—Governor Martin—then Governor Martin and I and others, as well as Mayor Sue Myrick, conceived a plan in which the State and the county and the city would put the land together in the inner city as an invitation to the sports franchisor or franchisee, whichever it is, who was looking for cheap land in the suburbs, to bring their stadium to the inner city, and they did. And we told them right up front we will not pay for your stadium but we will provide the land, and they are paying through their ticket holders for that stadium.

We do not have the fear that most cities have that they are going to run off and leave their $170 million stadium as a result. And it is, I think, enough of our commitment toward what is going to be good for our economic development that we have put the infrastructure in. And we will get our return, incidentally; we will get paid back I think we estimate in about 7 years through the tax returns for our public investment, and after that it will be a wonderful stimulus to our economy in many other ways.

But I think that is the level at which public and community ought to stop in their commitment toward pro sports. I mean, that is a luxury, it is a frill, it is frivolous. We have more important things to do in our city than build pro sports stadiums.

Mr. DAVIS. Thank you.

Mr. CLINGER. The gentleman's time has expired.

Mr. Gutknecht.

Mr. GUTKNECHT. Yes, just briefly, I want to follow up on the—because I was in the State legislature and we had some big fights over sports stadiums in the State of Minnesota. And the theory that we operated on was, "If we build it, they will come." And you sort of took the attitude, "If they build it, they will stay." And I think that is an interesting difference.

I really am glad I have come here today because what I have heard is that the spirit De Tocqueville wrote about when he talked about democracy in America, it is still alive and well in some parts of the country and I think that we—and particularly—I am the vice chairman of the Washington, DC oversight policy committee. And we have so many problems to deal with.

One of the most important comments I just want—I really do not have any serious questions, I just wanted to comment. Something else that struck me, you said this has to almost become an ethic and you have to do it every day. And I think that is critically important. We have got a huge task in front of us in terms of downsizing, restructuring the Federal Government. And we have got to stay after it every day. And I might just say we are making serious progress. We will have eliminated something like 300 different departments and agencies before this appropriation process is through.

But one of the comments I did want to make, and unfortunately I would love to hear from the people from Nucor Steel because I think that is an interesting example. Do you—can you tell me approximately how many levels—from the lowest city employee to the mayor's office, how many layers are there?

Mr. WHITE. Yes. May I share an experience with you? I was searching the TV once about 2 years ago. And on CSPAN heard Mike Walsh, who was the CEO of Union Pacific, advising the committee of Congress about how to do it. And he started talking about when he took over the position with that railroad it was every bit as bureaucratic as any governmental unit that you and I would know about. And he said that—at least I gathered from his comments that he arbitrarily decided there should be no more than five layers.

And of course at that particular moment I was going through this exercise. And I felt pretty lonely, as a matter of fact. I knew what the mayor wanted and I knew that he had support for that, but inside our organization I was feeling kind of lonely. So one of the reasons I said "persistence" is because of what I learned from listening to him.

I said the same thing, now. I said: Well, if he can do it I can do it. And so I said we will have no more than five layers. And we were able to get even the police department to do that. And that was in our larger departments. In our smaller departments there is one or two, in our smaller units. And we just arbitrarily said that is what we are going to do. And we gave each one the opportunity to work out their own problems as to how they were going to make that happen. I had to do it in my office; otherwise no one was going to pay attention to me.

So the assistant managers in my office—and there were three and a deputy—they had a cluster of departments that they worked with before. And we eliminated that.

This Community Safety Plan, though, was led by my office so that it was an integrated thing. So they had a different function. They are now looking at the long-term implications of what we are doing and leading the organization in that conversation. But your chief of police is running your police department and it is fully delegated. Everything almost that the mayor and council has given me as authorities I have passed on to those key businesses, and we are pushing it down.

Now, that was not easy to do because people did not—you know, it was just a shocking change. But we did it, and we are not finished with it. Then you have to go back and say, well, why do you have five? That was—you know, there was not anything great about that number, really. So we—you know, you just have to keep working at it. I hope I answered your question.

Mr. GUTKNECHT. No, I think you did. And I think this is a critical point, Mr. Chairman. As we go forward and talk about restructuring the Federal Government as much as we possibly can I think this is a critical point. Because I am told there are some departments—USDA comes to mind—where by some estimates there are as many as 100 layers to the USDA. And I think that is throughout the Federal Government. And I think we have to set as goals to narrowing the difference between the people who actually do the work.

And the other important point that Mr. White just made here is you gave the departments both the responsibility and the authority, both. I mean, you pushed it back to them and said, "Here is your budget, here is your responsibility, here is our expectations, and this is what we want you to do. Now, you figure out how to do it the best." Right? I do not want to put words in your mouth, but——

Mr. WHITE. No, no, you are exactly right. I run high risk, as you can imagine. I am not sure the mayor even knows all this stuff we are talking about. I run high risk that one of them will take off in the wrong direction, right? Well, I have been doing it now for 2 or 3 years and they have not taken off in the wrong direction.

Also, all of us went back to school. We spend 2 days a month, one half day, 1 full day with that group—about 15 of us together. And so what we talk about at those meetings are not where the police chief puts the cruiser, but the big issues facing our organization. It works.

Mr. VINROOT. I do not want to—this goes off in an off-tangent. You are through with us and you want to go to the next people. But let me just take this to its logical conclusion. He is right; we really ought to be pushing down to the picking up the garbage level, delivering the service level as much as we can, and eliminating as much as possible between the mayor and the manager and those people, and we are getting away with it and I think we are going to succeed.

But the logical conclusion is that—and I know we are opening a whole new ballgame. We have a 14,000 person HUD agency, and I know a lot of them work in Washington and a lot of them work

all over the country. I have been to Washington to say: Why do you not consider doing away with that? Why do you not consider block granting and taking some risks that the Charlottes and the Atlantas and the Washingtons and the Detroits can figure out themselves. And they may figure out different solutions to how they use less money for that purpose. And we may find that one city can do it really well one way and one another; but we will have, even among ourselves, competition to provide these services. Why continue to feel like you must control, supervise, design the solutions in Washington?

I feel the same way about Raleigh. We have a public education system. We have a huge bureaucracy in Raleigh. There are 100 counties that love their children even more than folks in Washington, even more than folks in Raleigh, and we have different ideas about how to educate our kids. Why not let them run the risk, with less money, with more flexibility, maybe even doing it better, maybe failing. We are at the 48th point in the Nation right now. We cannot go much further below where we are. If you gave us total flexibility we could probably do as well as we are doing now. But I know I am opening a new ball of wax for you. Do not mean to.

Mr. GUTKNECHT. Thank you very much.

Mr. CLINGER. And time has expired. I cannot resist. The gentleman mentioned the Department of Agriculture as being one of the most enormously bloated bureaucracies. And the chairman of our Agriculture Committee, Mr. Roberts, tells of an agriculture bureaucrat who was found on the steps of the Department of Agriculture sobbing uncontrollably and just horribly grief stricken. And somebody asked him, "What is the problem? Did somebody in your family die?"

"Oh, no. My farmer died."

Mr. VINROOT. My farmer died.

Mr. CLINGER. Gentleman from Pennsylvania.

Mr. FOX. I like that, Mr. Chairman. I will have to come to Charlotte more often. I have not heard all your stories. It is one of Davis' constituents. [Laughter.]

I did want to say, Mr. Chairman, I appreciate so much that former mayor and Congresswoman Sue Myrick was astute enough to invite us here to follow her lead in trying to make government smaller, more responsive, and less intrusive. And so we are hearing about the Charlotte model today, and we are thankful of her calling this hearing and trying to follow her lead with some of the innovations in Washington.

I wanted to ask a couple of questions, if I could, to follow up on what my colleagues have already started, and that is: You say you had 14,000 new jobs that have come—been created by the private sector. Was government a part in bringing them here, and if so——

Mr. VINROOT. No. No. No. And a great story about that. I was asked by the most—one of the most prominent new additions to our community what we would do to make their—help them make their final decision to pick Charlotte over Atlanta. And I said we are going to provide good schools, a safer environment, very low taxes, and systems that work. And that is the—those are the incentives for you to come to Charlotte. But nothing else. And I frankly

think a lot of the reasons they came are the reasons they did come here; we gave them nothing. A lot of the reasons they came are the reasons that I described.

Mr. FOX. The basics.

Mr. VINROOT. Yes.

Mr. FOX. How were you able to get NationsBank to build the transportation center? Any tax incentives, any tax credits?

Mr. VINROOT. No, not that I am aware of. I do not know enough about that to answer that intelligently, but we did not do anything for them. Other than ask them.

Mr. FOX. OK, let me ask you this. It is important, obviously, to engage citizens in a debate over the size and scope of functions covered. How have you been able to get the citizen involvement in your restructuring initiative? How were you able to get the citizens involved in that?

Mr. VINROOT. Well, you heard me talk about four different task forces.

Mr. FOX. Right.

Mr. VINROOT. Who were made up of about 15 people each.

Mr. FOX. What was the first one? But I—trying to take notes and I——

Mr. VINROOT. Well, there was an organizational task force that looked—headed by John Correnti, the president of Nucor, to look at the size and shape of the structure. My goal was to go from 9 or 10 levels down to 2 or 3. And I think that is pretty consistent with what Nucor does. And the second——

Mr. FOX. Now, you still continued working with those folks beyond their initial input?

Mr. VINROOT. They worked for about a year and gave us a very good report on what we ought to be doing and the manager took it from there and—not really.

Mr. WHITE. Yes, we—if they gave us a good idea then we continued to pursue it.

Mr. FOX. Right.

Mr. WHITE. And so we have a continuing relationship. By the way, when you get citizens involved like that then they are going to watch you.

Mr. FOX. Good.

Mr. WHITE. I mean, they are interested then. For the first time they may be interested in what is going on in city hall. So they stay interested. And so that is the way that works.

Mr. FOX. And what kind—for the last question I would ask: What types of advanced technology have you used to better serve your customers and employees? Or your constituents and your employees?

Mr. WHITE. I do not know whether it is too different from what other cities are doing. But simple things, like giving people that are in the field a phone. They do not have to come back to this building to do a lot of things. They can communicate much better, rather than having to come back. So just a phone.

Any mechanism that reduces the work, whether it is a mechanical or a communications device, we have done that. Just things that you can buy off the shelf, quite frankly.

Mr. FOX. OK. Thank you very much, Mr. Chairman.

Mr. DAVIS. Would the gentleman yield for just a second?

Mr. FOX. Certainly.

Mr. DAVIS. I would just add, Mr. Chairman, if I could, that since Mr. Gutknecht had quoted Alexis De Tocqueville, that one of my favorite quotes from De Tocqueville comes from his "Democracy in America" where he said that too much centralization on the body politic leads to a paralysis of the extremities. What we have seen here, that is exactly what happens, is Washington takes over this, we lose the kind of innovation that you all are doing here in Charlotte and we want to try to restore this. If we could do this in communities around the country, just think of the efficiencies and the people that are being served that are not now. So you have been a great testament. Thank you.

Mr. CLINGER. This is a very erudite panel, quoting De Tocqueville. I usually—Pogo or somebody that I quote. But—[laughter.]

Mr. MICA. Mr. Chairman, before we conclude this panel I would really appreciate your follow-up, and you do not have to do it now. We have 358,000 Federal employees just within the viewable distance of the Capitol building, and we have 20,000—I am sorry, 36,000 in the Department of Commerce, 20,000 in Washington, DC; EPA 18,000 totals; 7,000 in Washington. I would love to hear your perspective. You talked about giving more flexibility. But your perspective of how we could do a better job with fewer people in the Washington level, and maybe point out, if you would give us a letter, of some of the problems with HUD, EPA, some of these other agencies where you think we could do better with fewer at the Federal level and sending, again, the bucks back and the responsibility to the local level. I would really like that for the record.

Mr. CLINGER. I think I will ask you if you would not mind responding, and that is—that might be a hearing in and of itself.

Just to follow up on one thing that Mr. Fox mentioned. One of the things that we are having great difficulty with at the Federal level is this ability to really bring ourselves into the modern age in terms of technology. We have such arcane, convoluted, unbelievable restrictions on the ability to buy things, to really find out what is current. We just went through this great, wrenching Medicare debate, and a major part of that was waste, fraud, and abuse in the Medicare system. Well, the fact is that one of the reasons we are unable to get a handle on that is because our technology, our computer capacity with regard to following on people who are ripping off the system just does not exist very much.

And so we are having great difficulty dealing with a whole range of things because we are way behind, I suspect, States and local governments in bringing technology, particularly computer technology, to play in terms of downsizing and making government more efficient. So I really appreciate your participation.

Gentlemen, thank you very, very much. It has been very fascinating. A very excellent contribution.

I would call upon Mrs. Myrick to introduce—I understand we have——

Mrs. MYRICK. Yes. I just wanted to recognize Ann Schroder. Ann, stand up so they can see who you are. Ann is the chairman of the County Commission, the other half of government here, and they

have also been involved in a lot of this. And I just wanted you all to meet her and know who she was. And Ann, if there is anything you would like to add during the public part of this, please feel free to. Thanks for being here.

Mr. CLINGER. Thank you very much for attending.

I am now pleased to introduce our next panel of witnesses, and they may come forward while I introduce them.

Mr. Bill James was appointed in 1991, by Mayor Vinroot to serve as chairman of the Charlotte Privatization/Competition Advisory Committee. And in his distinguished private sector career I understand Mr. James has 17 years of experience in banking, auditing, and general accounting, and has worked for one of the major accounting firms of this country, Price Waterhouse, since 1987.

Ms. Pat Garrett is president of the Charlotte-Mecklenburg Housing Partnership, and she has had a distinguished career as chair of the North Carolina Housing Partnership, and is a founding member of the North Carolina Low Income Housing Coalition.

We welcome you both to the hearing. And as you may have heard me state for the first panel, it is our custom in this committee, as an oversight committee, to swear all of our witnesses so as not to prejudice the rights of any witness. And if you have no objection, I would ask you to rise and raise your right hand.

[Witnesses sworn]

Mr. CLINGER. Let the record indicate that the witnesses answered in the affirmative.

Mr. SPRATT. Mr. Chairman, for the record I would note that their nameplates are switched.

Mr. CLINGER. We have a bit of a problem with the nameplates, yes.

Mr. BASS. Mr. Chairman, so I do not get diverted wondering, I was just wondering what office you are running for. I cannot see your—I just do not want to be thinking about it the whole——

Mr. JAMES. City council at large.

Mr. CLINGER. OK.

Mr. JAMES. I am running to try to sit where Mrs. Myrick is right now.

Mr. CLINGER. OK. We will have the clock on, but you are not enslaved by that. But we would try to keep the testimony as succinct as possible. And I guess, Mr. James, we will ask you to lead off.

STATEMENTS OF BILL JAMES, CHAIRMAN, CHARLOTTE PRIVATIZATION/COMPETITION ADVISORY COMMITTEE; AND PAT GARRETT, PRESIDENT, CHARLOTTE-MECKLENBURG HOUSING PARTNERSHIP

Mr. JAMES. Thank you very much, and I appreciate you inviting me, Chairman Clinger. Also it is good to see Mrs. Myrick and Mr. Spratt. I am actually, I think, closer to Mr. Spratt's district, even though I live in Mrs. Myrick's. I live right across the border in Charlotte, but right next to South Carolina.

I serve as chairman of the city of Charlotte's privatization committee. I was appointed by Mayor Vinroot in March 1994. One of the things that is different about what I do and what our committee does is, we were not formed to be a debating society or to de-

bate the merits of privatization or competition or efficiency. That debate came and it went several years ago. It came and it went with the committees that you heard Richard Vinroot mention on competition and government efficiency. The community had its debate, we had our elections, that decision was set. My committee is a committee to get things done. I am just going to rattle off a couple of the things that we have done that are unique to Charlotte, and I think also unique to the Nation.

One is, we have written and implemented guidelines or procedures actually, on paper that define how it is that we want to accomplish privatization and government efficiency. Privatization, from our perspective, when you get to the nuts and bolts of it, is made up of asset management. What are you going to do with all the excess assets, buildings, land, and equipment that you have?

The other piece of it, of course, is services contracting, which is: What do you do with your employees and are they the most efficient at what they are doing? Do we need to be in this business, or should we get out of it?

Another point is, with regard to assets, we have put about $30 million worth of assets on the market. Or else it is either on the market or in the process of being on the market, and that includes our old convention center which is probably the largest piece of vacant excess real estate we have.

We have privatized 25 percent of our residential garbage pickup at substantial savings, and we have put up for competition millions of dollars in services that were previously maintained in-house. The residential garbage is, I think, a good textbook example of some of the issues that I heard being bandied about. This was the first major service that we looked at. In doing that we—there were things like: Should we have a "no layoff" policy? Should we mandate employee benefits? Should we require certain things of private industry that we do not normally—in other words, to help government get on a level playing field? In the end, we ended up rejecting most of those.

With all of this, we have really just scratched the surface. Over the next year or so we are going to bring up some other issues. The Charlotte Coliseum is one that is going to be on the table. Right now it is being deferred until we finish the lease negotiations, but I anticipate that it will come up eventually.

Another issue is Charlotte Transit. I heard you all mention that one, too. The interesting thing about Charlotte Transit is that the only reason it is privatized now is because of the government subsidy that you all provide. If you did not require things like Davis-Bacon and some other rules, we would not have been forced to have shunted it across because of—it required unionization and it required certain other rules that, in order to comply with those rules, if we would have complied with them with city workers we would have violated North Carolina law. So we had to make a decision: How do we accept the Federal money? If we accept the Federal money we have to set up these artificial environments.

Second, another excess, the excess land at our airport. We have about 1,100 acres. I heard your comment, Mr. Bass, I think it was, about we will build it—if we build it, they will come. In Charlotte we had these same type of debates that go on. We have a large

number of land out there, we have land in other parts of the city. The question is always with a city and economic development: Should we build it first and then hope that they come, or should we let the private sector work on it? That is a debate that we are going to have in the next few years.

We have also begun privatizing certain water and sewer functions. And the reason I think the privatization has been so successful is a commitment by our elected leaders to find better ways to perform government services. Mrs. Myrick started that off a number of years ago. Second is a commitment on the part of the city management to see to it that privatization and government services is a priority.

And third—and this is the thing that I want to address—is a strong oversight process which is my committee that asks the tough questions and tries to insure that the public and elected officials are well informed. It is this oversight process that I guess I would like to kind of chat with you all a little bit about because it is the thing that I think will help you all the most.

When you get to setting up a Federal oversight commission for privatization or however it is you are going to structure it, I cannot stress enough the need and the absolute essentialness of having an oversight committee or an oversight commission at the Federal level that are not made up of bureaucrats. You all are politicians; you do not have time to do it. That somebody who can oversee this and process this information, write written rules in plain English. Our rule in Charlotte is providing the best service at the lowest cost to the taxpayer.

Second, avoid mixing social goals. There are a lot of rules in government that are layered on year after year after year. We want to help this group, we want to help that group; and we have avoided that in a way because we have said—and I will give you an example. When we were discussing the garbage issue the subject of minority quotas and benchmarks came up. Should we break this large contract for 25 percent of the garbage into a bunch of smaller sections so that small businesses, including some minority businesses, could have access to them. In the end, the decision was made: No, because what our goal was, to provide the best service at the lowest cost, and efficiency comes from quantities or economies of scale. So what we tried to do was to think of what would be in the best interest of the taxpayer. If we need some other programs to help various interest groups then we will, of course, do that. So mixing two goals results in excessive regulations and stifles competition, I think, in a nutshell.

I mentioned that if you all at the Federal Government are going to get involved in the privatization and government efficiency business I do think you are going to have to have some kind of oversight committee. How you set that up I guess is up to you. Franklin Roosevelt, when he was involved in government efficiency, appointed a czar to coordinate production of war materials. I think if you are going to dismantle 40 years worth of excessive government regulations and are trying to promote efficiency, I think you are going to have to have someone that sits there and can work on this stuff; somebody from the business world that can be involved in this.

I guess in the end I hope that you will consider what you can do for us, which is allow our municipality and municipalities like Charlotte and airports, to sell our—we cannot sell land, we could not sell our airport, we cannot sell our water treatment plants, we cannot sell a lot of the assets we have in Charlotte because even though you gave us the money with grants, those grants come with strings. And those strings are hindrances to us. We cannot fully privatize and fully consider some of the options we have got. We considered privatizing water treatment plans. And the report came back is it will not be efficient. We cannot do it because there is rules at the Federal level that say if we do this you—we have got to give you the money back. My own personal opinion is that I hope that you will let us keep that money and proceed. And I will be available to answer any questions you might have. Thank you.

[The prepared statement of Mr. James follows:]

U.S. House Committee on Government Reform and Oversight
Testimony by Bill James (Chairman of Charlotte, NC's Privitization Committee)
October 20, 1995
Page 1

Good Morning. I wanted to thank Chairman Clinger for inviting us here to discuss how to make government work better.

My name is Bill James. Currently I serve as Chairman of the City of Charlotte's Privatization/Competition Advisory Committee.

Our Committee was formed in March of 1994 to get things done. We were not formed to be a debating society.

Over the last year or so some of our accomplishments are:

- we have written and implemented guidelines (procedures) for determining how privatization and competition should occur. A first in the Nation, I believe.

- we have selected about $30 million in excess real estate and placed it on the market including our old convention center.

- we have privatized 25% of our residential garbage pickup at substantial savings and have put up for competition millions of dollars in services over the last year that were previously maintained in-house.

With all of this, we have just begun scratching the surface.

Over the next year or so we anticipate discussions will be held on the Charlotte Coliseum, Charlotte Transit and excess land at our airport; to name a few. In addition, we have begun privatizing certain water and sewer functions.

The reason that privatization has been so successful in Charlotte is a combination of several things:

- First - A commitment on the part of our elected leaders to try to find a better (more efficient) way to perform government services.

- Second - A commitment on the part of City Management to see to it that privatization and competition of government services is a priority, and

- Third - A strong oversight process (my Committee) that asks the tough questions and tries to insure that the public and elected officials are well informed in a fair and impartial manner.

As you on the House Oversight Committee work to make the Federal Government more efficient and save the taxpayers money; I would like to offer some suggestions on how the Federal government could both help itself and municipalities (like Charlotte).

Regarding the US House's efforts to downsize the federal bureaucracy and make our Nation government more responsible I have the some thoughts:

- First - Write written rules in plain English that define the ultimate goal of privatization. For Charlotte, the rule has been :

  "providing the best service for the lowest cost to the taxpayer"

- Second - Avoid mixing social goals (such as minority quota's or benchmark's) with rule number 1. Governments can rarely do two things at once well. Mixing two goals results in excessive regulations and pages of rules that stifle competition.

- Third - Establish a Federal Oversight Committee with one person responsible to look into all areas of the Federal government. During World War II , President Franklin Roosevelt appointed an individual to coordinate the production and use of war materials. Today we need a "Czar" that will coordinate the dismantling of 40 years of burdensome federal regulations.

- Fourth - Give this Federal Oversight Committee and its "Czar" authority to bring back legislation to a House Committee and a budget and staff to get the job done.

- Fifth - Require that all areas of the Federal Government (except sensitive defense or medical facilities) be subject to this oversight committee.

and

- Sixth - Inventory all government assets and allow this oversight committee to bring back to you plans for disposing of those deemed "excess"

Finally - Help municipalities such as Charlotte by removing impediments to privatization. Examples of some of these would be:

- Allow municipalities with utilities and airports that were built with Federal grants to sell these facilities and retain the money in the local community.

  Federal money used to build these facilities were taken from the taxpayers of Charlotte, for example, and I believe, we at the local level should be allowed to retain these funds and use them here.

  Keeping "repayment rules" slows privatization of major facilities and provides a shield for those that don't want change.

- Remove excessive regulations on municipalities that raise the cost to the taxpayers. Rules such as these increase costs to cities like Charlotte by increasing not only the prevailing wage rates but the paperwork associated with monitoring these statistics.

In closing - I appreciate Chairman Clinger's invitation. After 40 years of ever increasing government regulations, tax burdens, and inefficient management of our Federal tax dollars; I am glad to see members of Congress take downsizing government so seriously. I sincerely hope that while this process is being set up that you all can also solve some of the "red-tape" we in Charlotte get from the Federal government.

Thank you.

Mr. CLINGER. Thank you very much, Mr. James.

Ms. Garrett.

Ms. GARRETT. Thank you very much, Mr. Chairman, and members of the committee. Thank you for letting me come to talk with you. When I was talking with Sue earlier she says, "I am always bragging about you," and I told her that always scared me to death because I was—you know, I always go around most of the time thinking, gosh, I cannot ever do this right.

But I would like to have the opportunity to talk to you a little bit about the Charlotte-Mecklenburg Housing Partnership. And I think we are one of the first steps the city took when they started to talk about how can we be innovative and how can we talk about getting the private sector involved in some of the things. And we did not replace the Committee Development Department or many of the things—the services that the city is still doing.

However, we were organized with the city, county, and private business input. That is how we got here. And if I could be so brave as to say that the biggest—our biggest organizers were the—actually the private businesses, themselves. Especially banks. There are a lot of banks here in Charlotte. This was before a lot of the acquisitions and mergers happened. So we—they looked at us as an opportunity.

So I want to tell you just a little bit about how we have involved private investors, how we have gotten the private dollar involved in affordable housing, and then just give you a couple of—we are proud of all the projects that we do, all the different things we do. But I want to give you a couple of examples that I think you can use in a very small way to—as you talk about how to best change your housing programs or make them more efficient in your communities.

First of all, we began by organizing a loan pool that we could use for mortgages. Instead of paying the full cost of a mortgage for a low income family, we are at—we had a private loan pool from the banks that would provide at least 80 percent of the mortgage for someone. So that meant that the private investor was already there. You only had—and in this case, as we started out, we had a 20 percent investment from the local government. And that was very helpful as we moved into talking about recycling money, keeping money flowing. And at the time the city of Charlotte had an innovative housing fund that was not—did not have any Federal strings. It had—our basic rule were—was: Here is some money. We want you to leverage at least two to one, serve people at this income level, and tell us about it as you go along. Which is a very innovative way of saying to a very serious business group, "You figure it out. You be accountable." So I think that is a different way of looking at things.

And we have had quite a bit of success with our single-family home ownership program. We have 150 people who have bought houses through us. And that is a very small amount, but in a—we are also a very young organization. We did our first mortgage in 1990. So it is—has been a learning process.

But I want to talk to you about a couple of just special projects. One of them is the acquisition of some apartments that are owned—that were owned by the city of Charlotte and the housing

authority. These apartments were built during the time when HUD went out of the business of building any more projects, no more project money for new construction. And they were built by—using city of Charlotte funds. These complexes were—had some various problems all through the years. They had—we were having a lot—there were a lot of maintenance problems, there was no way to do any renovation and those kinds of things. And so we were asked to take a look at this ourselves.

It was a long process, as you can imagine when you get a lot of people in talking about this, you can spend a lot of time in meetings. But in the end what we were able to do is, four of the complexes—and these are small, this only amounts to 171 units—were given for $1, however you do those legal things, to the housing partnership with us—our charge was: We are going to give you some money. It was HOME money which is—comes from the Federal Government. The rest of the money you have to figure out how to get a loan, you have to figure out how to service a loan.

Now, there is a lot of non-profits who would run like crazy when they say, "Oh, you mean I have got to pay a loan back?" But we have turned this into I think a positive step. We are now in the process of the renovations. Two of the complexes are almost finished. They are being rented by a private management company that we employ. We have a loan of almost $2 million for those units. And we are going to have really good places for people to live. And I think that is an example of how you can turn things around and look at it with a different approach. We are still having income limits. These are limited to people at 60 percent of median income. So we are not turning these into yuppie villages, but into still places that are in the income guidelines and need to have a place to live.

The other program I would like to talk to you about fits right into some of the comments from the mayor and the city manager. It is called Genesis Park. And that is the one—I guess it is the first community policing community. It is—I do not think that anybody would question the fact that it was the most troubled community and most—it was eight square blocks of drug dealing, murders, heroine, crack, you name it. And we can give you all the great stories about Genesis Park.

It was then called Kenney, Gibbs, Wayt Street. And those are just the three street names, but everybody just referred to it as Kenney, Gibbs, Wayt Street. You could not go there. If you went there you took the possibility of getting killed. There was something like 11 murders in 1 year. So being sort of, I guess, gluttons for punishment, we started into Genesis Park. We were persuaded by some community leaders that this would be a good place to go. But what we were really persuaded by was the police who said, "If you—we are already in there and we need you to go with us." And so we went to Genesis Park.

Basically what we are doing is, we bought up the units. We used our innovative housing money. We bought a number of the units. Our original plan was only to buy 40; we ended up having to buy another 60 or so because we found out you could not be just a little bit pregnant, you had to get the whole thing. And if we did not deal with the worst drug places we were not going to—it was not going

to make it because, as you say, if you fix up a nice house and if you build it they will come. They will not come if they are afraid for their lives. They will not come unless it is a nice place to live.

So in—we worked with a lot of city departments. And that is the key, I think. And you have seen—you hear a lot about partnerships. But, I mean, we did not—we had to work with the garbage people and we had to work with code enforcement people and we worked with the police and many, many other departments to make this happen. We are still in the middle of this program, but we have finished our first street. We have worked a lot with Habitat. They are also involved in there. We have 28 homeowners, through our program; Habitat has 8. We are continuing to do renovations, we are continuing to sell properties. And we had last year, in a 2-year period, we had a 74 percent decrease in crime.

Now, that is—if you want to talk about fighting crime, we also know these people go somewhere else. However, they do not have 20 years to get established and to get their systems established in that other neighborhood if we are really doing a good job of letting each other know what we do.

Those are just a few ideas that we have had and things we have worked on. I think that I would—I need to emphasize at the very last that the real key to this has been cooperation from a lot of city departments and county departments. But the other thing has been you now have a lot of private businesses and private business brains. I mean the folks who can figure out how to do mergers, who can figure out how to do some of the many things that businesses do and stay very profitable, to use their brains and get them involved in the process I think has been such a great asset for the community, and I hope that we will continue to do that.

[The prepared statement of Ms. Garrett follows:]

Charlotte·Mecklenburg
Housing Partnership

Testimony to the House Committee on Government Reform and Oversight

October 20, 1995
Presented by
Patricia G. Garrett
President
Charlotte-Mecklenburg Housing Partnership

Charlotte-Mecklenburg Housing Partnership, Inc. (CMHP) is a broad-based, private, nonprofit housing development and finance corporation organized to expand affordable and well-maintained housing for low- and moderate-income families in the City of Charlotte and Mecklenburg County with a continuing interest in the ability of occupants to more fully enter the economic mainstream. CMHP was incorporated in July 1988. The organization was formed to get private investors more involved in developing and sustaining affordable housing. In this area, the organization has been particularly successful. Not only has private investment been made, but some of the best business leadership in Charlotte has become very involved in affordable housing.

In 1989, CMHP was successful in securing a $17.5 million loan pool from six local banks. Several were actively involved in the establishment of CMHP. The loan pool is used for first mortgages for single family detached homes. These mortgages (80% loan to value) are at a lower than conventional interest rate and have relaxed credit guidelines and debt ratios. The loan pool has recently funded a delinquency prevention program. Critical to the success of CMHP programs, is providing second mortgages (mostly 20%) from funds made available by the City of Charlotte. The investment of public funds is lower because of the availability of the first mortgages from the private sector. There are currently 152 mortgages from the loan pool.

CMHP has helped produce multi-family units (Summerfield, Seneca Woods, Community Housing Development Corporation, and Accessible Apartments) through small loans. CMHP developed the forty-seven unit Seversville Apartments, its first multi-family project in which it is developer/general partner. Funding came from low-income housing tax credit sales; long term loan from a member bank; NC Housing Trust Funds; a church based nonprofit organization involved in the community; City of Charlotte; and CMHP equity. There is a commitment to the Seversville neighborhood to provide a long-term comprehensive development plan that involves scattered site new construction, the rehabilitation of existing units, and the development of homeownership opportunities. More than twenty single family homes have been purchased and rehabilitation of thirteen single family homes had been completed by July 1995. Once again, a key to the success of these projects, both multi- and single family, is the involvement of many partners such as: schools, city departments, churches, and the neighborhood organization, and of course private investors and lenders. Management is provided by a private firm.

Charlotte-Mecklenburg Housing Partnership, Inc.
1201 Greenwood Cliff, Suite 300 • Charlotte North Carolina 28204
(704) 342-0933 • Fax (704) 342-2745
Equal Employment Opportunity And Affirmative Action Agency.

The second multi-family project is a fifty-five unit complex, the Cheshire Chase Townhouses. The two and three bedroom townhouse units will be located on 7.61 acres of land at Sugar Creek Road West and David Cox Road (1/4 mile north of W.T. Harris Blvd.). There will be fifteen buildings, plus a building containing a meeting room, PATHWAYS office, rental office, and laundry facility. The project should be completed in 1996. Private investment is through the sale of tax credits.

Perhaps the best example of innovative thinking and working together - City, CMHP, and private sector - is the acquisition by CMHP of four apartment complexes from the Charlotte Housing Authority in March 1993.

During the 1980s, when the federal government got out of the construction of public housing units, the City of Charlotte built seven apartment complexes to provide an addition to the Charlotte Housing Authority's federally subsidized public housing. By 1993, it was evident that the 309 apartments weren't generating enough income to cover maintenance costs. Over the course of a few years, the apartment sites had suffered a variety of maintenance-related problems: erosion, poorly kept landscaping, on-site trash, falling gutters and trim, and poorly installed window unit air conditioners. There were also broken windows and smashed doors, and substantial interior and exterior renovations were needed. The troubled units were not serving the needs of their intended market. It was a time for a recommitment or a change in the way things were done.

The Charlotte-Mecklenburg Housing Partnership, Charlotte Housing Authority, and the City's Community Development Department agreed that the Housing Authority would provide rental units for families earning below 40% of area median income and the Housing Partnership would serve families earning up to 60% median income. The families living in the Housing Partnership's City-Financed Units would work toward a transition from subsidized housing to homeownership or market rental within five years. In the Spring of 1994, all parties agreed to divide the units and serve different groups. CMHP received 171 units in four apartment communities. The parties worked together to assess all families who were then residing in the CFUs for potential relocation. Families who qualified to stay remained and began participation in the CMHP program. Relocation assistance was provided by the City and the Charlotte Housing Authority.

CMHP's Construction Department began the physical renovation of the units, which included plumbing, installing new electrical appliances, repairing driveways and parking lots, drywall repairs, etc. Many new features were added such as wall-to-wall carpeting, washer/dryer hookups, air conditioning, laundry facilities, playgrounds, and community rooms. Several multi-family private developers provided assistance with obtaining good cost information and getting the project off to a good start.

With partial funding from Mecklenburg County, CMHP's PATHWAYS I Program is being implemented at these sites to link apartment residents to community services in order to support their goals for self-sufficiency. Since homeownership is one of the goals of the families, a strong component of the program is "pre-homeownership readiness," which includes budgeting and money management. In addition to focusing on individual families, PATHWAYS I also works to build a sense of community within each complex and the surrounding neighborhood.

Funding for the rehabilitation is $1.3 million federal money from the City, $100,000 from miscellaneous private sources and a loan of $1.7 million from NationsBank to CMHP. Once again public funds are being leveraged by private funds.

One of CMHP's most successful neighborhood development projects involved the "taking back" of Genesis Park. Known throughout the Carolinas as an open drug market, Genesis Park was ranked in 1992 as having Charlotte's highest violent crime rate because streets were ruled by drug dealers and gangs. Police efforts had little effect and the few homeowners that lived there were afraid to go outside of their homes. Gun fire was often heard and houses were marked with graffiti. It was common for drug activity to be so thick that a police car had difficulty driving through the streets.

The Community Outreach Missionary Church formed Charlotte Genesis Inc. and convinced Charlotte-Mecklenburg Housing Partnership and the City of Charlotte that a serious effort must be made before the community was forgotten and ruled solely by the drug dealers. The Charlotte-Mecklenburg Police Department set up a command post on Wayt Street in 1992 and officers observed 66 different taxi cabs ride in and out in just four hours. Drug activity was evident and rampant before street barricades, made possible by CMHP becoming a principal land owner, were raised to eliminate the drive-through traffic. CMHP began to work on solving the housing problems in Genesis Park. Mostly brick duplexes were being rented by drug dealers and users. Housing was on a serious decline. CMHP began purchasing houses and renovating these duplexes into single family homes in 1991 The first four homeowners moved in their two-story homes in the summer of 1992. CMHP's commitment to Genesis Park is more than providing housing - it's neighborhood empowerment, cleaning up the community, and getting other landlords and organizations actively involved.

Over the past three years many changes have taken place. Violent crime has decreased so much that in 1994 Genesis Park ranked as number forty-one (74% decrease from 1992) among Charlotte's neighborhoods. This drop in crime can be attributed to the effectiveness of Charlotte's Community Policing Program and to CMHP purchasing seventy-nine houses and ridding Genesis Park of its criminal element. Street names were changed to shift the focus from the once notorious streets (Kenney, Wayt, and Gibbs streets). An active neighborhood organization has been started by CMHP's first homeowners. With assistance from CMHP's PATHWAYS Program the neighborhood organization was awarded a Neighborhood Matching Grant to build a community entranceway sign to proudly mark their neighborhood. Children now ride their bikes without fear of gunfire and neighbors plant flowers in their yards which used to be littered with dirty syringes and broken glass. Even the existing homeowners that lived on Double Oaks Road and Wayt Street now feel safe enough to walk to the monthly neighborhood meetings.

In Genesis Park, CMHP currently has twenty-eight homeowners and Habitat for Humanity has eight. CMHP currently owns another sixty properties to be rehabilitated for homeownership. Once again, many organizations worked together to make this community development program work.

Charlotte-Mecklenburg Housing Partnership is proving that involving private businesses, along with public organizations, in the provision of affordable housing can provide benefits. The leveraging of funds is the most obvious benefit and we must become even better at that as resources are less available.

The other benefit that may not be quite as obvious, is the involvement of business leaders in decisions about projects to undertake. Getting good representation from a number of different sectors such as developers, lenders, planners and trainers has enabled us to take on difficult neighborhoods and difficult projects and made them succeed.

Public and private can take on neighborhood challenges, as well as large rental rehabilitation projects. Private investment is possible and available, but it must have some flexible subsidy money so that the maximum leverage is possible. Public organizations often need the business approach to problems. Together we can make good things happen and funds go further.

Mr. CLINGER. Thank you very much, Ms. Garrett, for a very inspiring story, really. We are very grateful for having your participation.

Mrs. Myrick.

Mrs. MYRICK. Well, I really do not have any questions. I just want to thank you for being here and tell you to keep up the good work.

Ms. GARRETT. Thank you.

Mrs. MYRICK. And I appreciate the fact that you have been willing to share some of this with the HUD task force, and hope that you will be equally as willing to continue to do that as Chairman Clinger starts dealing with that, as well.

Ms. GARRETT. OK.

Mr. CLINGER. Mr. Spratt.

Mr. SPRATT. Ms. Garrett, I was with John Crossman recently. And for years, as you know, he was the largest builder of single-family housing and also a developer of low-income housing utilizing the provisions of the tax code and 221[d][3] and Section 8 of the various housing laws of this country. And he was telling me that he had testified, I believe, in Congress. But in any event, he was deeply concerned about provisions that are included in the HUD appropriations bill which he says will have a devastating effect on the stock of low-income housing nationwide, including Charlotte, causing conversions and divestitures and a significant loss of low-income housing. Are you familiar with those changes in the law?

Ms. GARRETT. There are a couple of things that I am familiar with that I have been concerned about myself. One is the—and I do not think this is in the HUD bill, but there is a—we are going to have a serious problem if we lose the tax credit, the housing—the low-income housing tax credits. And I have talked with Representative Myrick about this. The tax credits are a way of getting private investment. For example, we have done some of that, and of course the Crossin Group has done some, and we have worked together with them doing some things. If we lose that we are going to lose a substantial amount of money, private investment money that is available.

And I think that we need to try to hang on to some of that—those ideas. I do understand that in some States, and I do not think it is here, that there have been some abuses and some problems, but we should take their money away and give it to us because we know how to do it.

The other thing is there is a lot of concern among non-profits in particular. A lot of these—a lot of housing units that were built with—say for 15 or 20 year investors and that are now going to be up for sale. As you know, the preservation piece that are going to be up for sale, many of them in the areas that they are going to bring a high price, I think that is a concern. I am not exactly sure how to handle that because working for a lot of people who are on—who are businesses and investors, I am a little concerned that we change the rules. I mean, the rules are—20 years, it served its purpose as low-income housing.

So we are going to have to try to figure out how to not make the mistake in the future. And of course I believe that the ownership by a non-profit who is committed to long-term maintenance of those

kinds of properties is a very important way to do that. I am not really very up on other things, other things that are going to happen.

Mr. SPRATT. Thank you.

Mr. James, when you let out business to competition that had previously been public sector business—let us say, garbage pickup—is that now private sector?

Mr. JAMES. Twenty-five percent is, yes.

Mr. SPRATT. Did it concern you that one of the key differences in cost might have been the fact that the private sector pickup firm did not provide comprehensive health insurance to their employees, whereas the city does; and did you do anything to equalize that in the competition?

Mr. JAMES. No. And the reason is, is because—and I guess this comes down to a philosophy of government that was discussed with city council. This issue was brought before city council, the question of: Do we, as a governmental entity, municipal entity, want to mandate what employee benefits should be? The answer came back that in a free market society with competition, we should not be mandating what benefits there should be. There are a number of large players, BFI, Waste Management, Chambers, Carolina Container Corp., and those companies employ thousands upon thousands of people across the country and even in this area. If someone who is involved in the pickup of garbage does not feel like their wages and benefits are adequate, they can go across the street and go to work for a different company. I do not think that any more than you would mandate the employee wages and benefits of NationsBank, you should be mandating the employee benefits of the city and the people that compete with the city.

Mr. SPRATT. I was not suggesting mandating, I was suggesting sort of a social accounting where you look at their bid, and if the primary difference between their bid and your cost is the cost of health insurance, and you ask yourself if Carolina Memorial is going to be picking it up at the other end—what I used to call Memorial; that is how long I have lived in this area—but Carolina's medical.

Mr. JAMES. Well, I do not think that. The answer to your question is no. The answer to your question is, is that there is an accounting mechanism to equalize the different bids. We do know, for example, that if a bidder will come in and will agree to take our employees so that we do not have to pay relocation costs and we do not have to be involved in retraining them and putting them in another department, if they will acquire those individuals, we will in essence account for that. It may very well be that that bidder may have the second lowest bid, but after you account for the fact they are willing to take all the employees, they could very well have the lowest bid.

So there is an accounting mechanism within the RFP process, if you will, in terms of selecting the company to pick it up. But there is no requirement like what you are talking about which says we going to give you credit if you have higher benefits or take away something if you have lower benefits or some way to equalize it. No, there is nothing like that.

Mr. SPRATT. All right, thank you.

Mr. CLINGER. Thank you. Now I am prepared to recognize any other members who might have questions. Gentleman from Virginia?

Mr. DAVIS. Mr. Chairman, I have got a couple of questions. I was really intrigued by the testimony. I think I would want to start, first of all, Mr. James, with you, just going back to local government, which is still my passion.

The—we found in Fairfax that having the public sector and the private sector kind of competing against each other, having both available made each one better. It was a check. The private sector could not cut their own cartels and everything because you had the government doing some, and citizens could then opt in or out for whichever they wanted and it has worked very well. And I take it you have had the same kind of successful experience here in Charlotte.

Mr. JAMES. We have. In the solid waste garbage collection, example, the city competed—well, they did not actually compete; it is kind of a technical point. But they submitted a benchmark estimate as to how much they thought they could do it for. Theirs was roughly about $80,000 a year more expensive than the low bidder, in this particular case BFI. That is a success story in many ways. It is a success story that BFI won the bid and the private sector I guess was awarded it. But it is a success story and a compliment to the city that they managed to get their costs down. The only way they were able to get them down was because they could see this sort of train wreck coming from the——

Mr. DAVIS. Their jobs are on the line.

Mr. JAMES. Right. Several years before that they made a commitment that they were going to be more efficient. And so over that 2-year period, over the last 2-year period before we got to the point of them submitting their benchmark estimate they closed down an operational facility, they transferred some employees, they downsized, right-sized, whatever the politically correct term is. And it was that effort that resulted in their bid only being $80,000 different.

Mr. DAVIS. It is competition; that is what the mayor talked about.

Mr. JAMES. Correct. Absolutely.

Mr. DAVIS. Ms. Garrett, I was intrigued by some of your housing innovations. We put an ordinance in our county that mandated when new development took place of over 100 units, that a bonus was added, in terms of the densities, but a percentage of that bonus would have to be for moderate-income housing, therefore incentivizing the private sector to produce modern income housing. And it was controlled. The appreciation was controlled through covenants on the property so that it would be sold to—for a 50-year period. Montgomery County, MD, had a somewhat similar ordinance with only a 10-year. Have you looked at anything like that here?

Ms. GARRETT. We have talked a lot about it in-house. We have not proposed it at any point yet. I think that one of the things we are going to—you are going to see from our organization—I guess I probably should not—I have not warned everybody yet, but we are—as we start to deal with City Within a City areas which are

the hardest place to do housing, you have to not only do a lot of renovations, you have to do some demolition. You also have to persuade people they really do want to live there. Then that is where we are going to be looking and hoping that the amount of money we have to invest in a house can somehow be lessened; how much money we have to have, subsidy money, can be lessened by some of the—those differences.

Mr. DAVIS. What we did, we felt—I mean, the cost of land is a critical factor in this. Where you pitch your tent on some land and it is a $100,000 house, just because the land is so expensive. But by adding density you basically bring the cost of land down and that was the idea.

On the other hand, and this scattered—the idea here, that this would scatter the housing. Large-scale, low-income housing projects—I have really changed my views on this over the last 15 years. They have been a disaster in terms of their upkeep. And in the city of Washington, 80 percent of the major crimes are within two blocks of public housing projects. In the suburbs, we were fortunate enough to have the resources where we could do community policing and do kind of a holistic approach and attack those areas separately. But it created more problems than it solved over the long term. We did not recognize it at the time it started. I wonder if you have had similar experiences here?

Ms. GARRETT. Well, the city of Charlotte—I mean, I hate to brag, but I mean before I was here—I did not have anything to do with it, but the city of Charlotte already had that kind of a plan before I came here. They had what they call the Housing Assistance Plan which basically, as far as multi-family was concerned, when you were—it was subsidized apartments, it was not just housing authority, it was—applied the tax credits. You could not build any more than 55 units closer than—well, it used to be a half mile and it was changed to a quarter mile to any other. You also had to build in some self-sufficiency programs and those kinds of things. So there was already an effort when I came here. And in fact, the ones that we acquired recently were the—were scattered site units. Now, it is harder to manage.

Mr. DAVIS. Sure.

Ms. GARRETT. Property-wise. But it is a more——

Mr. DAVIS. OK, one other question. There is one thing we could do at the Federal level, because some of our laws—it is no longer really—we do not make it attractive for private capital to go into this kind of housing. And we used to have an accelerated depreciation and a number of other items and tax incentives that would allow people to go in and make a profit. Because if you rely on government to do this it will never get built. We do not have the resources. You have got to incentivize the private—is there any laws you think you could suggest at the Federal level we could make, would make your job at the local level easier?

Ms. GARRETT. Well, I think that when I talked just a little bit about the low-income housing tax credits, that is something that somebody—the people have finally figured out how to work. Really they are a passive investor so they are not actively involved in the management of it.

Mr. DAVIS. Right.

Ms. GARRETT. But it is looked at from—it is a private investment, the—as a general partner in one, we know our obligation is to the investor. And to a certain return. They have bought this tax credit from us. If we do not do—if we do not manage it right we will lose the IRS—the credit and therefore the investor will not be kind.

Mr. DAVIS. I think Mr. Spratt picked up on that in his question when you answered it. Anything else you can think of?

Ms. GARRETT. I do not know. I think I really believe that we do not give private business enough credit. I think that when—that they can see a good deal and that they actually care about where people live. I think that even just some of the stuff we have to—one of the things I have to do with my board is to make sure that they do not get discouraged by: Oh, no, HUD says you cannot do that. Oh, no, somebody else says you have—I mean, the—for example, the contracting for some of the work we needed done or Davis-Bacon which is a—we pay prevailing wages here. It was designed for union—for a union community. We are not a union community.

So, I mean those kinds of things just make—first of all, increases the cost of the non-profit because we have to do that. And second of all, I think business people are just turned off when they say, "What?" And I think they need to have a better feel about what does make sense and more insight into—more opportunity.

Mr. DAVIS. Great. Thank you.

Mr. CLINGER. Gentleman from Florida?

Mr. MICA. Mr. Chairman, I have just a quick question. This committee has just finished a rather hefty task of dismantling the first department of the Federal Government, the Department of Commerce. And we probably will have some responsibility and oversight of some other reform measures. One will probably be HUD, which a lot of folks are looking at. As we dismantle HUD, do you think we could do away with HUD, send the funds back to block grants to the State, and then through policies and—tax policies and other Federal guidelines, operate without that department?

Ms. GARRETT. The only—and this is a—the only reason that I think we need a HUD—and I am probably going to get killed by some of my colleagues—is that we need the visibility of the problems of housing. We have got to keep—I mean, low-income housing or housing problems will affect everything that happens in our communities. I mean, people do not come with new businesses if you have a lot of bad housing, if you have a lot—places are not available for people to live, if you have crime-ridden neighborhoods. I think it is all connected.

So I think we have somehow got to keep housing as a visible something that we should be worried about. What I want to do is to see more of the responsibility and it to be more of a guidance, you know, big guidance, large philosophy kinds of things from the government down to the States for the local to—we want to serve these kinds of people and those kind of things, and then let us try to figure out how to make it work in a smart way.

I do not know whether that answered your question. We are not getting—we do not need the Federal bureaucracy here. We do not even deal that much with the Feds; the city does that for us. We have to do it as a part of our contract thing that is passed on to

us. But I would much rather have some flexible—give me a little bit of flexible money and I can go a long way a lot longer than I can with money that says it has to be spent this way and it can only—it cannot be spent for this—for a second mortgage, but it can be spent for rehab, and all those different things that are causing so many problems here.

Mr. MICA. But your folks that are moving in, businesses are not asking you about the availability of public housing; are they?

Ms. GARRETT. No. But on the other hand, they are going to be very concerned about if there is a lot of problem housing.

Mr. CLINGER. One of the—you know, I guess the overriding objective of what we are about in this committee is to try to determine what level of government should be performing which or providing which services. And that really involves sort of a redefinition of Federal/State/local relationships. And how we go about restructuring that is really our ultimate objective and what can be done better at the private sector.

One of the major issues in this kind of an exercise is those who say you cannot really devolve things back to the State or local level because there is a need for a national standard, whether it is water quality or air quality or housing quality, which gets us into the categorical, regulatory overkill which we are constantly being criticized for at the Federal level. How would you respond to that? I mean, do you think—can you be trusted, really, to do some of these things, either at the private level or at the State or local level?

Ms. GARRETT. Well, I think we can be trusted. I think that as far as a housing quality standard, you have got a more restrictive housing quality standard in this city and county than you do—than you are requiring. Those basic things are not even an issue here.

I think we can be trusted. I do think, and one thing that worries me is when you talk about sending all the money to the States, one of the things that has helped Charlotte a lot is the fact that it is an entitlement city, so that whatever regulations are put on it, we only have—well, we only have to deal with the Federal regulations and not—if you are a small city you have to deal with not only the Federal regulations but the State regulations, and then you have the local regulations. So I think that that, in itself, creates a lot of problems.

And I would be very concerned in North Carolina about losing that—the money just coming directly to the city, because I think the city does know how it needs to be doing its policy. It has proven that it has a good history; it has already done innovative things; there are—people are getting decent housing and those kinds of things. So I do not think that there is anything wrong with that system, as far as sending some money directly to the cities. Because I think cities can figure out how to do it.

Mr. MICA. Mr. James, do you have any comment?

Mr. JAMES. Well, I mean, I—personally, I am in favor of downsizing government at the Federal level, State level, local level, every level, and that includes HUD. In terms of asking my personal opinion, I am involved a little bit in affordable housing, working with Pat here on some things over the years. I am in favor of dismantling it.

The thing that I notice about HUD, to be honest with you, is that Pat here operates a very efficient and a lean and mean entity. But it is a private/public partnership that is mostly emphasis on the private. Whereas the other areas of public housing we have in Charlotte, the eyesores, the problems we are having are the ones that are public, the ones that she ends up taking over after they have been messed up, if you will. So that is a pretty good reason right there to show that public support like this in terms of HUD probably does not work all that well.

In terms of returning the money to Charlotte, I think that is a good point. Because it is a problem we have in Charlotte, NC, which Mrs. Myrick can give you all the information on in the world, that we in Charlotte are sometimes viewed as the great State of Mecklenburg because we do not always get proportional allocations from the State in Raleigh because of a—I guess just the way things seem to work. So if you can manage to return the money to us without the strings, but give it directly to us, I think that would be of much greater benefit than if you send it to Raleigh, and then they will add the strings unless Richard Vinroot gets elected and then maybe that will improve.

Mr. CLINGER. OK. If there are no further questions of this panel, we would thank you both very much for your participation——

Mr. JAMES. Thank you very much.

Mr. CLINGER [continuing]. For your very helpful testimony and your—both statements are going to be made part of our record, so we appreciate your being——

Ms. GARRETT. Which gentleman is from Florida?

Mr. CLINGER. From Florida is Mr. Mica.

Mrs. MYRICK. Mr. Mica.

Mr. MICA. I am from Florida.

Ms. GARRETT. I would be remiss if I did not show you the article in the Jacksonville, FL, paper about "Charlotte Shares Housing Tips." We were invited to come down and talk about our housing programs, so——

Mr. MICA. Good.

Ms. GARRETT [continuing]. We are spreading the word.

Mr. MICA. Mr. James has a Florida education, so great panel.

Mr. CLINGER. We thank you both again.

We now come to the open mic segment of our program. And we have a lottery system, but I believe that Congresswoman Myrick has two people who would—who should be given a little precedence here to speak.

Mrs. MYRICK. I am not sure if Ann had to leave. Did Ann have to leave? Jerry Fox, our county commission—county manager—I will get it straight, Jerry—please come down—is here, and we would like him to say a few words and share with us, please.

Mr. CLINGER. Jerry, could you speak from that podium up there, if you would, please.

Mrs. MYRICK. Jerry, I appreciate you taking the time to come, and I am sorry that you were not notified about this ahead of time. I really do not know how that happened and I apologize to you for that, because it certainly was not intentional.

STATEMENT OF GERALD FOX, MECKLENBURG COUNTY MANAGER

Mr. GERALD FOX. Well, you have—I am sure you heard this morning from the mayor and city manager. Of course, I am with the other entity of government here, the county. I am also certain you heard about the cooperation and—on various activities in this community and that is one of—I think one of the hallmarks of Charlotte-Mecklenburg. But I do appreciate the opportunity of spending a couple of minutes with you to tell you about some of our particular initiatives.

One initiative—and I have got a handout here that I would like to give you—is a recent initiative, and we are calling it the Charlotte-Mecklenburg Resolves II. And it deals with putting together six agencies—six levels of government or agencies in this community to try to deal with issues facing children, adults, families, and neighborhoods in this community. Those six entities are Mecklenburg County and the city of Charlotte, Charlotte-Mecklenburg School System, the Carolinas Medical Center, the Charlotte Housing Authority, and Central Piedmont Community College.

We call it Resolves II because Resolves I occurred on May 31, 1775, when Mecklenburg colonists used a provisional arrangement of rules to govern themselves due to the ineffective laws of the King of England. And we are trying to do the same thing with Resolves II, and that is to put together a better way to address the issues of children, families in our community.

How are we doing this? We are doing it both through an organization which pulls together the CEOs—excuse me, the chief executive officers of each of these organizations on a quarterly basis and—with staff people working on various projects during the interim time between the time when the chief executive officers meet. We are dealing with such issues as transportation: How do we better coordinate our transportation efforts so that persons who lack the means of their own transportation can get to the areas where they need help and so on. Also, on data sharing, we find that each one of our entities has its own information system and there is very little sharing of that information. One example, our Department of Social Services was able to provide detailed information to our school system on children who might be eligible for food programs in the school that the school system had never taken advantage of previously, and had this opportunity to do that.

We have a lot of hope for Resolves II in bringing together the various entities that have functional responsibilities in dealing with children and adults and families. I will pass out some information on that particular initiative.

Let me speak about one or two other areas. Beginning on October 1st Mecklenburg County has contracted out its public health service to the Charlotte-Mecklenburg Hospital Authority. We believe it is one of the first in the country where a hospital authority is operating now the public health system, the prevention, the education system for a county government or for a city government. We have had to go through a lot of hoops with our State government in order to bring this coordination about, but we believe it is the right thing to do and it will prove to be cost effective as well as service effective in the future.

We have had the opportunity of receiving, through your Department of Commerce, two grants of about a half a million dollars each to develop a local Internet system called Charweb here in Mecklenburg County. This—the grants from the Department of Commerce allowed our public library to develop this Charweb system, which is now part of the Internet system. We have computers located at most of the community centers throughout the community so that people now can access information directly by computer about the goings on and the functional responsibilities of their city and county governments. By the way, I just received notice today that this Charweb system has received the Public Technology Institute Computer Technology Award for 1995–1996. We are very proud of that.

Finally, in our privatization efforts, that is a good buzz word these days and everybody is doing it, I guess; we also are. We have recently created a Privatization Study Committee. That committee, made up of I believe seven or eight citizens, has prepared for us a suggested privatization plan. Staff took that plan and developed an implementation plan, and that implementation plan is now in the process of being carried out.

In the meantime we are proceeding with some other privatization initiatives, and one example is in our fleet management operation where we have contracted out our parts inventory and parts room operation to a private firm who not only supply the persons to operate that parts facility, but also the parts themselves, at a substantially discounted rate.

So I think, if I can leave one thought with you, it is that local government works in this part of the country, I think primarily because of the cooperative ventures between the various levels of local government, especially the city and the county. We intend to continue and expand upon that effort in the future. In fact, I do not know if the mayor and the city manager mentioned it, but we are now on a road toward possible political consolidation of the city and county governments. A charter commission has been appointed. And if it comes up with a charter that is acceptable to the city council and the county commission, it will be on a ballot in November 1996.

Mr. MICA. We appreciate your testimony, Mr. Fox, and we will see if we have some questions. I think Mrs. Myrick had some first.

Mrs. MYRICK. Jerry, have you not been a pilot program for the State relative to the delivery of the welfare services and a lot of what has happened within that area? Are you not doing something special there?

Mr. GERALD FOX. It is primarily in developing information systems, computer based information systems to tie—to allow us to better carry out the services, as well as to directly tie into the State system for recordkeeping and information and things like that.

Mrs. MYRICK. But how is it working? I mean, are you satisfied with what is happening with it, or is it boggled down in bureaucracy?

Mr. GERALD FOX. It is—we have had problems with it because, again as Mr. James indicated, we are looked at as a kind of the State of Mecklenburg, and the systems that might be needed here are—might not be needed in 90 of the other 100 counties because

of their size and complexity. So the State has a difficult time in accepting a system from Mecklenburg County when it does not really——

Mrs. MYRICK. Apply?

Mr. GERALD FOX [continuing]. Fit the other—the counties' needs.

Mrs. MYRICK. Would you be willing to share—and I know you do not have time today to do it—but to share something with the committee in writing, if the chairman is in agreement, on your view of, you know, what we are getting ready to do relative to Medicaid and the welfare programs that are coming back to the States, from your viewpoint, on the local level, of things that you believe would be helpful from us as this is happening?

Mr. GERALD FOX. Yes. In fact, this past Tuesday at a regular meeting of the board of county commissioners our director of social services presented an overall view of the Governor's or the State's work program, as well as the welfare—proposed welfare reform proposals, and we are making comments to both the State and to appropriate Federal committees, and we would be happy to provide that information to this committee, also.

Mr. MICA. We would appreciate that, and if you would do so it will be made part of the record.

Were there additional questions, Mr. Spratt? Mr. Fox? Fox and Fox.

Mr. FOX. Mr. Fox for Mr. Fox. It is kind of a family thing. [Laughter.]

I would ask you, Jerry, whether the Federal Government should be establishing additional incentives to expand privatization? Do you—is there any way we can be assisting you in that effort or is there—existing laws are sufficient?

Mr. GERALD FOX. I think our existing laws are more than sufficient to be able to do this. You know, privatization is not an easy process, and I think you heard some of that this morning. You have got employees and benefit programs and quality assurance issues that need to be addressed. But I think we have got enough statutory authority to do this if we have the will to do it.

Mr. FOX. Thank you.

Mr. MICA. Any additional questions?

Well, we thank you for your contribution, for your comments on some innovative programs, and look forward to your additional written testimony. Thank you, sir.

Mr. GERALD FOX. By the way, I—we just had our seventh grandchild last night, Sue, at 11:04.

Mrs. MYRICK. Wonderful.

Mr. GERALD FOX. So,——

Mrs. MYRICK. A boy or a girl?

Mr. MICA. Congratulations.

Mr. GERALD FOX. It is a girl, Gabrielle LaRatta.

Mrs. MYRICK. Congratulations.

Mr. GERALD FOX. Tampa, FL.

Mr. MICA. Increasing the voter registration in my State.

Mr. GERALD FOX. It is not a Mr. Fox—not another Fox, Mr. Fox, so——

Mr. FOX. Well, I am sorry to hear that.

Mr. MICA. Thank you so much.

Mr. FOX. Long as the baby is healthy, that is all that counts.

Mr. MICA. I think the way they are doing this, they have given me this little packet here and I am going to call the next number here, 9516553. 6553, whoever has that, are they still here?

[No response.]

Mr. MICA. OK. Well, let us try another one. We have 9516557. Yes, sir. And if you would come over to the mic. And if you could identify yourself and if you are with any organization—representing any organization we would like to know that for the record.

Welcome. And you have about—we try to limit the presentations to 5 minutes, if you could. Thank you.

STATEMENT OF CONRAD POGORZELSKI, GASTONIA, NC

Mr. POGORZELSKI. Well, Mr. Acting Chairman, I have a handicap; I am a slow talker. So take this into consideration.

Mr. MICA. I am, too, but we will deal with that. And if you could identify yourself, again, and——

Mr. POGORZELSKI. My name is Conrad Pogorzelski. I am from Gastonia, NC.

Mr. MICA. Thank you.

Mr. POGORZELSKI. And your chairman opened up the opening saying that he would like to learn or your group would like to learn from success stories. I hope this group is keeping an open mind because there are not success stories that need to be addressed, such as the savings and loan government bailout.

That—my expertise is in transportation. I have been a transportation consultant, arbiter, started with various trucking companies back in 1969. Anyway, I will go back to 1980. 1980 there was a motor act. Before 1980 transportation was such—surface transportation, motor—to where carriers had exclusive rights to areas. The 1980 Motor Act changed that to where there was a zone of freedom opening up the motor industries to private enterprise. Truckload carriers, gypsy carriers; this made a carrier easy to go in business and start in the industry.

Since 1980, 60-something percent of motor carriers have gone bankrupt. When this law was passed, 1980 Motor Act, the administration that was going in was hostile to regulation. They wanted a deregulation atmosphere. So the administration appointed ICC commissioners that were for deregulation, even though there was a zone of freedom in the industry.

These commissioners were appointed by the executive department with the sole purpose of eventually deregulating transportation. They—the commission got the majority somewhere about 1984 or 1985, and then started to add their agenda into the administration part of the Interstate Commerce Commission that was hostile to what the Federal Code was of regulation. They had their own agenda. The executive part of the department and the judicial were not in agreement. Are you that way today? Interesting question. In other words, to make things work you have to be in agreement with the three parts of government.

Getting back to the 1980 Motor Act that opened up a zone of freedom, we have Interstate Commerce commissioners being appointed that is hostile to what is written in the books as the laws. They passed a few regulations opening up discriminating agree-

ments. These things that were passed by that commissioner—those commissioners started to create problems with the industry. With the lack of responsible jurisdiction of the Interstate Commerce Commission, all of a sudden carriers freely started to negotiate above and beyond the statute—the legal laws. And this created a problem to where the bankrupt carriers went bankrupt.

The courts that took over the bankruptcy, the trustees determined that these carriers were not filing their tariffs properly with the Interstate Commerce Commission, and therefore the courts, through the final rate doctrine, came back and balance dues shippers bunches of money, to where it began to create several hundred billion dollars in balance due shipments, freight rates. Correction, almost three-quarters of a billion dollars.

Congress was addressed to solve this problem. And it took 3 to 5 to 6 years before they figured out that we will pass a 1993 Rate Negotiated Act. What this will do is any small shipper that has a balance due against a bankruptcy court, that if they are a small business under several million dollars, that they will not have to pay any of this money back to the trustees of the company, of the bankrupt carriers. Companies larger than several million dollars in assets would have to pay a pro rated portion of it, 17 percent of their balance due bills.

This was the remedy from the Interstate Commerce Commission not paying attention and having sincere people abiding by the Federal Code of Regulations. The administration was hostile to the laws and had their own agenda.

Anyway, the 1993 Motor Act supposedly corrected the problems of the balance due. But it started to create another problem. The 1993 Motor Act—well, the solvent carriers that are still in business, the motor carrier says, well, if we let you put in this legislation what you going to do for us? Well, we have a statute of limitation of filing overcharges, of freight overcharges. And, you know, if you can reduce that statute of limitation from 3 years to 18 months we will not say anything against you. Fine, that was agreed upon. The 1993 Rate Negotiated Act was passed, and therefore there was a remedy; small businesses did not have to pay the balance dues.

Now comes 1994, Tiara. This motor act addressed the 1993 Rate Negotiated Act to where if carriers now go bankrupt and they do not have a—if they do not have a filed rate somewhere but it was an agreed rate, that if the shipper or the carrier would get a bill and this was a disputed bill, that the Interstate Commerce Commission would have a statue of 6 months that if you had a complaint, a contested rate, you can file with the Interstate Commerce Commissioner and therefore you have—had a valid remedy on a bankrupt carrier or a solvent carrier. And it worked both ways.

Mr. MICA. If you could begin to summarize we would appreciate it. And we also will give you the opportunity to submit some written suggestions or comments on this matter.

Mr. POGORZELSKI. Well, all in all, the Interstate Commerce Commission is trying to be dissolved by this Congress this year. There are things that need to be resolved right now in that Interstate Commerce Commission department that are not being resolved; and until they are resolved, the portion of the responsibility of the ICC is going to go to the Department of Transportation and bring

those problems there. And it needs to be resolved before, or for that ship to be put in order.

Mr. MICA. Well, we appreciate your comments and they are very timely. And ICC is scheduled for possibly a phaseout, and it is important that some of the laws be brought into synch. You have given us a good history of some of the problems. Quite seriously, I would appreciate your providing us with your written recommendations. And I think we can share them also with—I serve on the Transportation Committee. We would be glad to look at those. But we appreciate your comments. There have been some problems in the past, and maybe your suggestions can help us correct them.

Did any of the members have any questions of the witness?

[No response.]

Mr. MICA. We thank you.

Mr. POGORZELSKI. Thank you.

Mr. MICA. And let me see, I am doing our next little pick here. 9516560. 6560. All right. We thank you. If you could please identify yourself, you are welcome.

Mr. SEILER. Thank you.

Mr. MICA. And try to summarize, if you can, in—within 5 minutes.

Mr. SEILER. Yes.

Mr. MICA. And we will be glad to take written comments.

Mr. SEILER. I will be as succinct as possible.

Mr. MICA. Thank you, sir.

STATEMENT OF MARK SEILER, GASTON COUNTY, NC

Mr. SEILER. My name is Mark Seiler. I am a resident of Gaston County and serve on the Gaston County Planning and Serving Board, and I am also a member of the Libertarian Party. I come here as an individual and my views do not necessarily reflect those of the party as a whole. I will take either credit or blame for the ideas.

Mr. MICA. I am a Republican and my views always do not represent the Republican Party. But you are welcome. Thank you.

Mr. SEILER. OK. I certainly hope in the not-too-distant future that we can add to what Mr. Spratt opened with this morning and have tripartisan coalitions on working toward downsizing government.

First of all I would like to make a comment on the public/private partnership, very briefly. I see there is a lot of encouragement for this. I certainly hope this does not become a government spoils system for those private entities that wish to go along with government to benefit themselves. Just a caveat there.

I guess I would like to start by saying government is like kudzu. You bring it in trying to solve a problem; and before you know it, it has completely taken over and it is nearly impossible to get rid of.

A recent survey that I saw stated that approximately 50 percent of citizens are getting their primary source of income from a government check. And this is very frightening in my mind because Gaston County recently did a survey of county employees during the budget period when the county commissioners were trying to

reduce the size of government by 5 percent. One of the comments that came back was that the government employees need to band together to elect the right kind of people so that government will not be downsized. This to me is very frightening, not only at a local level, but at a State and a Federal level.

Every year 7 to 10 percent of government employees either quit, retire, or die. I think what needs to be done, first of all, is to initiate a hiring freeze of Federal employees. This would give us a 7 to 10 percent reduction in government employees each year as an ongoing basis.

But what I would like to propose is even more radical than that. Ten years ago the idea of abolishing the IRS was considered unthinkable. Thanks to people like Senator Lugar and Bill Archer of Texas, this idea is no longer so crazy. It is becoming mainstream. I hope the idea that I am going to present to you, though it may seem extremely radical today, in another 10 years may seem very do-able.

There is a lot of effort going toward term limits for elected officials. I would like to see this concept extended to government employees. That is, limit government employees to 10 years in government at the Federal level, or perhaps encompass this at both the State and local levels, as well. And at the end of that 10 years they would receive as their retirement and severance package 1 year's pay equal to their highest year's earnings. That is it. No medical care when they reach 65, none of the retirement benefits that they are currently getting. I think this can be phased in with a series of measures for people who have already been in government 25 years or more not to subject them necessarily to the entire brunt of this particular idea.

But over the long term I think it is important that we give back to the individuals, and not unelected bureaucrats, the power to run one's life. And I see if we get a term limits situation for the elected representatives, that career bureaucrats are going to be calling the shots and they cannot be gotten rid of, as has been pointed out previously. And I think this is something, again, I think it is—you may consider it a very radical idea now, but give it some thought and perhaps in a few years it will not be so radical.

Because the Constitution, as you are aware, is a "middle of the road" document, it is not a radical piece of work. This is a compromise between the Federalists and the Anti-Federalists. We need to get back to this document. And I will answer any questions about the proposal for down—or limiting terms for government employees if you have any questions.

Mr. MICA. Well, we appreciate your comments and your testimony. And I will yield to Mr. Davis for a question.

Mr. DAVIS. Mr. Mica of course is the chairman of the Civil Service Subcommittee, so he might—I hope this does not come before us in his package this term, but——

Mr. SEILER. I did not say it was going to be easy.

Mr. DAVIS [continuing]. They would work—they would work for the—and I have got 54,000 Federal employees in my district and I will sample that and see if there is any support. I think they will like the 1 year severance, but if you threw the health care in on top of that they would like it real well.

Are you saying they would work 10 years and then they are out?

Mr. SEILER. Yes. Now, there would be three—excuse me—four exceptions to this.

Mr. DAVIS. OK.

Mr. SEILER. The military; the judiciary; and Federal law enforcement, which should be rolled back, as well; as well as foreign service.

Mr. DAVIS. How about cancer researchers and people like that?

Mr. SEILER. I do not think it is the legitimate function of government to be in medical research.

Mr. DAVIS. The NIH? Well, I do not, either, most times. But there will be some of the areas you will never get into if you—because there are so few cases in certain areas that you will never get into if the Federal Government does not at least fund some research grants. But I appreciate the innovation there. I do not think that I am ready to embrace it yet, but—[laughter.]

Mr. SEILER. Well, like I say, 10, 15 years ago no one was willing to embrace the idea of abolishing the IRS, and now it seems to be a very popular idea. I hope this one receives the same consideration over the years to come.

Mr. DAVIS. Thank you.

Mr. MICA. Well, I welcome your testimony. It is certainly refreshing and interesting. He only represents 54,000 Federal employees. My ranking member on my subcommittee has 116,000 Federal employees and retirees.

Mr. SPRATT. Not me.

Mr. MICA. Not Mr. Spratt, Mr. Moran from Virginia.

Anyone else have any questions?

Mr. SPRATT. I have two questions.

Mr. MICA. Go ahead.

Mr. SPRATT. The first is: I commend you for your logical consistency because I think there is some truth—you believe in term limits for elected officials, you better believe in them for non-elected officials because they will take a greater role in running the government, especially in the administration of the Congress if you have term limits. I do not agree with you, but I think you are logically consistent.

Second, I would just be curious to know how a Libertarian gets along on a planning and zoning commission? [Laughter.]

Mr. SEILER. Better than you might expect on a commission. However, it is a goal of mine to see if we cannot improve the concept of property rights as it relates to planning and zoning, and return that to the property owners as opposed to the—again, the unelected bureaucrats.

Mr. SPRATT. You believe in the process?

Mr. SEILER. I have seen a lot of problems with the process.

Mr. SPRATT. I agree with you about that.

Mr. SEILER. Zoning—what is called, as you—I believe it is euclidian zoning is what we have in Gaston County, and I see it as a very divisive tool in—among the residents of the county, pitting neighbor against neighbor.

And when in reality it is set up to protect, allegedly, an individual's property; but it is pretty much an "anything goes" process. If you know the right people, if you say the right things you can get

your—get whatever you want. So it is somewhat pointless. I would rather see a zoning ordinance based on the concept of trespass as opposed to preemptive restrictions on an individual's ability to use their property as they see fit.

Mr. SPRATT. Well, thank you for coming with your provocative ideas. I appreciate it.

Mr. SEILER. Thank you for your time.

Mr. MICA. Well, we thank you and appreciate your comments, and would welcome any additional written comments if you would like to submit them.

Let us see, our next pick here is 9516554. Come right up, and if you could also, as I said, identify yourself. Welcome.

STATEMENT OF TOM ROGERS, CONCORD COALITION CITIZENS COUNCIL OF NORTH CAROLINA

Mr. ROGERS. This may be the closest I will ever get to, "Come on down." [Laughter.]

Thank you.

My name is Tom Rogers. I am here representing the Concord Coalition Citizens Council of North Carolina. I hope most of you realize—I think most of you do—that the Concord Coalition is a nonpartisan grassroots organization dedicated solely to eliminating the Federal deficit. I did not come here with a success story, quite honestly. I am here rather to commend you, to encourage you, to hope that you become a success story, because to the extent that you downsize there is a greater than even chance that we will get toward eliminating the deficit. And so that is something that we are very interested in.

We believe that the deficit must be eliminated if lifestyles are to stop eroding, if our children and grandchildren are to face some prospect of enjoying—of working for themselves in the future instead of spending so much of their time paying for past consumption.

You may not realize that this is the second event in Charlotte this week dealing with Federal spending, at least the second. Two days ago the Concord Coalition's Debt Clock, this 24-foot mammoth counter, spent a day at the University of North Carolina in Charlotte. And during the course of that day several hundred students stopped to talk with volunteers of the coalition at the clock, and perhaps for the very first time in their lives began to realize just what this debt is going to mean to them. It is kind of discouraging for a young person to realize that an awful lot of the money they send to the government will be required just to pay for the debt, just to service the debt. And the sooner we stop adding to that, the better chances they are going to have of enjoying life.

I talked to my son the other day who is a 30-year-old computer expert, and he told me about going out beyond his regular job to find extra work. And then we talked a little bit about this. And his—his comment was, "I am not working hard for that." And that is right; he should not be working hard to pay for today's consumption.

So I commend you. I encourage you to go on. The Concord Coalition has its own suggested Zero Deficit Plan which you may have seen. We think it is a fair plan, it is a thorough plan. I would be

happy to leave it with the committee if you have not seen it. Some of the things you are suggesting with the Department of Commerce are in there. We agree with them, and we go a little farther.

But let me just issue a couple of concerns. The savings that you identify really should be real, not illusionary, not illusory. Jobs should disappear, offices should close, buildings should be sold. The savings should not be temporary. You know, this is a long problem and—and we should not make it possible for someone—or too easy for someone to come back next year and undo all the pain that you are going to go through.

And third, the savings really should be dedicated to eliminating the deficit. Do not let them slip off into some new use. It would really be a shame if all of your efforts and all of the pain that will result does not solve one of our major problems. So thank you very much.

Mr. MICA. Well, thank you. And let us see first if any of the panel—[applause.]

Mr. SPRATT. Could I say something?

Mr. MICA. Getting some applause there.

Mr. SPRATT. Could I say something?

Mr. MICA. Mr. Spratt.

Mr. SPRATT. Let me just take you down to where we are right now.

Mr. ROGERS. Yes.

Mr. SPRATT. Because I think it is too little noted.

When President Bush left office, the week before he left office, January 13, 1993, as required by law he submitted "The Economic Report of the President." If you will turn to page 69 of that report, you will see the projection of the Bush administration's Office of Management and Budget for the deficit for fiscal 1993. The intermediate projection was $332 billion, fiscal 1993. We passed the Clinton budget and it was extremely unpopular. You know the margins were as narrow as they can get. And when fiscal 1993 was closed the deficit was not $332 billion, it was $255 billion.

When fiscal 1994 was closed, September 30, 1994, the deficit was $203 billion. This year, fiscal 1995 was closed, the official number is not exactly settled yet, but it is supposed to be around $160, $161 billion. That means from the projection that George Bush made on January 13, 1993, to September 30, 1995, we have cut the deficit in half.

Now, Phase 2 is a dead necessity. It is absolutely required. And I urged the President last January to make that the theme of his State of the Union Message. I give the Republicans credit for moving that initiative, and I think we will move to closure before this session is out on something that will take us into the second phase.

But one reason I think we can go on to closure on the problem is that we did do something about the problem for which too little credit has been given in 1993. It has brought us from a projection of 332 to 161. That is half the way.

Mr. ROGERS. I agree. The Concord Coalition commends the President's leadership for doing that.

Mr. MICA. We commend the President, too; also his recent statement where he said he raised taxes too much and did not cut spending, so we—I am right with him. [Laughter.]

Did anyone have another——

Mr. SPRATT. Could I add just one more comment on that?

Mr. MICA. No, Mr. Spratt, you had your chance. [Laughter.]

Did you have a question, Mrs. Myrick? Mr. Bass.

All right, now it is your turn, Mr. Spratt.

Mr. SPRATT. I wrote the President a letter, for the record, since he blamed that on the congressional Democrats, saying we would like your budget a lot better and we would come closer to voting for it if you would cut more spending and raise fewer taxes. So——

Mr. ROGERS. And the Concord Coalition does not care who does it but just that it gets done.

Mr. SPRATT. I agree. I agree.

Mr. MICA. Well, we thank you for your testimony. You have livened things up a bit, and we will go to our next witness here.

Mr. BASS. Mr. Chairman, can the record show that the former senior Senator from New Hampshire, Warren Rudman, and former senior Senator from Massachusetts, Paul Tsongas, are the founders of the Concord Coalition, not the Concord Coalition. Concord Coalition. That is the Concord equivalent of calling Charlotte, Charlotte.

Mrs. MYRICK. I—may I explain that, because we have a Concord, NC, compared—you know, Concord, NC, compared to Concord, NH. That is the problem around here.

Mr. ROGERS. There are two ways to spell Concord.

Mr. MICA. Yes. [Laughter.]

Well, again, we appreciate your testimony. And we will call next 9516556. 556? If you will come right up and identify yourself, and again we would appreciate your trying to condense your remarks into 5 minutes. Thank you.

STATEMENT OF LEROY PITTMAN, SMALL BUSINESS OWNER, UNION COUNTY, NC

Mr. PITTMAN. Thank you, Mr. Chairman. My name is Leroy Pittman. I am a small business owner in Union County. I am also a county commissioner in Union County, have been for 5 years.

What I want to address you about today, I am a 10th amendment——

Mr. MICA. Would you give us your name?

Mr. PITTMAN. Leroy Pittman.

Mr. MICA. Leroy Pittman. Thank you.

Mr. PITTMAN. Yes. P-i-t-t-m-a-n.

I am a 10th amendment fundamentalist, and I think many of you folks are. Having served in local government, Representative Myrick and Mr. Davis, who is out of the room, can appreciate I think what I am getting ready to say in terms of unfunded mandates. We at the local level certainly feel the pressure of the existing unfunded mandates. I congratulate you for having taken the initiative to pass legislation in the 104th to prohibit future unfunded mandates. But we are still very, very concerned with the existing mandates that are on the books that put pressure on us at the local level.

I for one feel that we are the closest to the people in local government, obviously. We see our constituents every day in the restaurants and in the malls and in the supermarkets, and they get to ask us questions every day and hold us accountable every day.

So my philosophy is if you indeed—and the chairman, Chairman Clinger asked, before he left, "Can we trust you?" of one of the other panelists. My reply would be, "Can you afford not to trust us?" People, as it says in the 10th amendment, are the final authority in terms of what powers they delegate to the government. So that is not to be argumentative, that is just to be positional.

As you look at doing the other good things that you have done, you continue the progress, I would like to encourage you to look at some of the smaller programs, mandates, and waste—areas of waste in the Federal Government. And I know that you are focusing on the big picture, the billions and billions of dollars. But I think there is an awful lot of millions and millions of dollars programs that are wasteful or burdensome to the taxpayers that need to be identified and pursued aggressively in terms of their elimination or the passing back to us at the local level. So I would encourage you to do that.

I congratulate you for what you have done so far. We are standing shoulder to shoulder in our belief that the least government is the best government, and the closer to the people the better. And I thank you for having the opportunity to speak to you today.

Mr. MICA. Well, we thank you, and thank you for being on the front line. Did anyone have any questions?

[No response.]

Mr. MICA. All right, well, we will let you go. But we do appreciate your comments. And we will call another witness here. We have got 9516546. 546. OK. Well, is he coming down? Speak now or forever hold your peace. [Laughter.]

STATEMENT OF CHRIS SPRUYT, WAKE COUNTY, NC

Mr. SPRUYT. Hi. My name is Chris Spruyt and I came to speak just as a private citizen. I worked on a group called the Wake County Citizens Task Force in Wake County, which is where Raleigh, our State capitol, is.

Mr. MICA. Could you give us your name one more time so we have it for the record?

Mr. SPRUYT. Yeah. It is Chris Spruyt.

Mr. MICA. Thank you.

Mr. SPRUYT. It is S-p-r-u-y-t.

Mr. MICA. Thank you.

Mr. SPRUYT. This task force was involved in finding ways to downsize our county government. And it was a tripartisan group of people. And we succeeded in helping the county to lower our county taxes 2 years in a row. And we now have I think the lowest taxes in the triangle area.

But the main things we were looking at is, you know, what services that are currently provided by government can be provided by private means, whether it is businesses or charities or other voluntary associations. And the thing I do not hear mentioned by people in the government—usually not at all, and if ever it is very rare—is that the main difference between the way government does things, the way private organizations do things is private organizations rely on voluntary interactions.

If you do not like a service or a good that a business is providing, you do not have to buy it. No—they are not taking your money by

force and you are not—you can go to one of your competitors or you can choose not to buy the service at all. And anybody in any kind of organization tends to be responsible to the person or people that they get their money from. So in the case of private interaction, if it is a business they are responsible to their customers because they know that the customer has a choice whether they give them the money or not in exchange for the good or the service. If it is a charity they are responsible to their donors, because they know if they do not do a job that their donors thinks is good enough, the donors do not have to give them their money.

Now, government is the exception. Well, government and criminals are the exception, in that the people paying for the goods and the services do not have a choice of whether their money is taken for that good or service. And for that—that is the key reason why governments tend not to be effective at providing the things people want and private organizations are effective.

And I just—I am very bothered by the fact that I do not hear people in the government saying that, so what that tells me is they either do not realize that that is the case, or they think that they have a right to take our money and they know what is best for us. And I guess what I would like to see happen is as much of government as possible be—the things they are doing be taken out of the government, and if people still want those things let them pay for them themselves. In the meantime, do not take as much of their money and they will be able to afford to pay for these things themselves.

So just to give you one small example, if—this is probably not a good example. But let us—seat belt laws. I always wear seat belts, not because it is a law but because I believe I am safer wearing them. But if the government did not have jurisdiction over this, whether or not somebody wore a seat belt, how many people do you think would be willing to pay their own money to have somebody else be forced to wear a seat belt.

I mean, that is just one small example, but pretty much you can ask the same question about any service the government provides. And if it is something people are willing to pay for, like having mail delivered there is no reason why the government has to have that service. If it is something people are not willing to pay for, then the question is why should anybody do it. And I guess that is all I have to say.

Mr. DAVIS. Well, I appreciate your comments. In fact, Mr. McHugh, who chairs the Postal Service Subcommittee, is going to be doing some hearings on the question you raised. Do any of the members have any questions?

[No response.]

Mr. DAVIS. We thank you again for your comments and your testimony, and I am going to excuse you and call the next witness. Let us see, we have got 9516549. 549. Yes, you can use this one.

Welcome. And if you could identify yourself for the record we would appreciate it. Thank you.

STATEMENT OF FRANK GILREATH, CHARLOTTE, NC

Mr. GILREATH. Thank you. My name is Frank Gilreath. I live here in Charlotte. I am a volunteer for the International Executive

Service Corps, IESC, headquartered in Stamford, CT. And in that connection, I have been on six projects, three of which have been to Poland working with the Polish government in privatizing State-owned industries which has been focused primarily in marketing, shifting from a central planning to a free market system.

I would like to share with you my own personal experience with USAID. This is an excellent opportunity for aid, foreign aid to be examined.

Personally, I am very much a global person and I feel that foreign aid is a very necessary part of the United States integrating its total effort in the world economy, particularly in the 21st century. Having said that, however, USAID needs close examination. Whether Senator McConnell and Senator Helms are right in dissolving the agency and moving all this to the State Department is questionable and debatable. There are other agencies, as you know, that are on the table to be dissolved.

Let me share specifically with an experience in USAID. Zim Man I stands for Zimbabwe Manpower Number One. I spent the first quarter of this year on a project in Zimbabwe, recruited by IESC at the behest of USAID. Zim Man I was a complete failure, by their own admission, by surveying some 1,100 people or companies; and the preponderance of votes were that it was a failure. It was a top-down, Washington based USAID designed program which was a failure.

So what did they do? They came with Zim Man II. I was one of the four recruited by IESC to go to Zimbabwe and assist in Zim Man II. Let me describe briefly for you, very briefly, what we were charged to do. We were asked to develop a competency based training program in Zimbabwe. Here is a clue of how far off base they were. There was not an entity in the country of Zimbabwe skilled enough to develop this kind of a program. And a team of people were invited from South Africa to come in and develop this program. It was targeted specifically to indigenous small farmers. "Indigenous" in Zimbabwe is a code word for "black." And/or indigenous small manufacturers.

To show you how far off base it is, Zimbabwe has a tremendous climactic problem. It does not have water. We are fortunate to have some 48 inches of rain in our area, some 4 inches a month. They have 2 or 3 inches a month, 1 month or 2 months a year. Water is a problem. You cannot train and teach, in CPT environment, farmers how to farm if they do not have water. We have completely wasted our effort in Zim Man II, in my opinion. It is a very involved program.

But let me encourage you to look not only at USAID, look at the U.S. Information Agency and other agencies that McConnell and Helms are saying to disband or to shift—downsize and to shift their responsibility to—in the case of foreign aid, to the State Department.

My time is up. I congratulate you on disbanding the commerce—ICC, the Commerce Department. Let us look at HUD, let us look at Energy, let us look at Education, let us look at a whole variety of—not completely cut these programs out, but downsize the Federal Government, send these back to the States and local governments to where we can really do something with it.

On foreign aid, let me encourage you to vote for and support aid that goes through volunteer organizations. You will get at least a 50 percent leverage because these people will volunteer their services. Thank you.

Mr. DAVIS. Thank you very much. Any questions from the members?

Mr. SPRATT. I think the gentleman expressed a sentiment that a lot of us share, and yet you sort of leave us waiting for the second shoe to drop wondering what sort of organizational structure is the right structure to accomplish the goals we seek. I think we have a responsibility, I think there are benefits that flow back to our country from the right kind of AID program. And I do not think belongs in the State Department. I am not sure merging the State Department with AID—that they have different functions and missions.

So would you take just a second, tell us where you think—what can we do to the structure of the organization of AID to accomplish the goals? Should it be an intermediary to ferret out these PVO's, these private voluntary organizations and simply be a conduit to get the money to the right PVO's for the delivery of foreign aid services?

Mr. GILREATH. It would be studied and examined. I am not sure it should go back to State, either. I think the jury is out. But it should be studied because this is a bureaucracy that has been allowed to grow for some 30 or 40 years without this examination. And it is layered. There is no way you can say that they have five layers in USAID. It is just a bloated bureaucracy that ought to be studied and evaluated and restructured. Maybe go to State, maybe not. State itself has a problem. So I am not sure that we want to exacerbate State's problem by dumping USAID type problems on top of State. But certainly AID needs to look at.

And I am not a supporter of eliminating aid. To the contrary, I am very much a support of foreign aid.

Mr. SPRATT. Thank you, sir.

Mr. GILREATH. Thank you very much.

Mr. DAVIS. Mr. Bass.

Mr. BASS. Mr. Chairman, I just want to commend the gentleman for his testimony and his interest and concern about this issue that brought him down to this hearing to bring it to our attention. And I am hopeful that your testimony will be made available to the committees of jurisdiction that are dealing with this issue because it is through example and through input that we get from individuals, concerned individuals like you that we are able to make substantive and productive changes in the system. And I just want you to know I am very interested and appreciative of your testimony.

Mr. DAVIS. Without objection, that testimony will be shared with the appropriate committees on the House and Senate side. Thank you very much.

We now move to the panel 3 and we have two very distinguished witnesses. First we have Mr. Barney Lawson, who is the founder and owner of Modern Management Inc. He has had a very distinguished career in providing management consulting advice to local, State, and Federal entities both in the public and private sectors.

And Mr. Chris Rolfe, who is the vice president of organization effectiveness at Duke Power Co. and has worked in various engineering capacities since joining the company in 1972. He is also a director of the North Carolina Quality Leadership Foundation.

Mrs. Myrick.

Mrs. MYRICK. Barney, I wanted to say something to you before you start. Because, you know, you have been doing this for so long and you have seen so many groups and organizations that you have given expertise to, who have ignored it and put it on a shelf. And I want you to know that this panel, who is—that is here today, is dead serious about doing something, and will seriously take your remarks to heart. Because we are digging in our heels and we want to make changes. And so I wanted you to know that ahead of time so you did not think that you were wasting your time one more time by taking time out of your day to come and share with us.

Mr. LAWSON. Well, thank you, Sue.

Mr. DAVIS. Mr. Lawson, I do not know how I would take your remarks. I have not heard them yet. But assuming they are of the substance and quality that——

Mr. LAWSON. Sue says that it is right.

Mr. DAVIS. Assuming they are of that substance and quality——

Mr. LAWSON. And I want to thank you for asking me to come here. I did not know why I was asked because I did not know whether I could contribute anything.

Mr. DAVIS. Well, thank you. I——

Mr. LAWSON. Do you want to swear us?

Mr. DAVIS. Mr. Lawson, you were—yes, we have got to swear you in. Thank you. I do not have the script in front of me. Just raise your right hand.

[Witnesses sworn]

Mr. DAVIS. Who wants to go first? OK, Mr. Lawson.

Mr. LAWSON. Pardon me?

Mr. DAVIS. We will let you go first.

Mr. LAWSON. Me?

Mr. DAVIS. Have you first in the interest.

STATEMENTS OF BARNEY LAWSON, FORMER OWNER, MODERN MANAGEMENT, INC.; AND CHRISTOPHER ROLFE VICE PRESIDENT OF ORGANIZATION EFFECTIVENESS, DUKE POWER CO.

Mr. LAWSON. Well, I do appreciate very much having the opportunity to come here. And as Sue knows, I usually do not take just 5 minutes, but I will.

I have been in the consulting business and I would like to speak to you not as somebody who is involved in government or who has any vested interest in seeing government go one way or the other. Over the years in the management consulting business—incidently, I was in that business before unemployed executives were called consultants. [Laughter.]

I have worked in—throughout the world in——

Mr. DAVIS. It was a much smaller field then, was it not? [Laughter.]

Mr. LAWSON. I worked throughout the world, and a lot of our client—most of our clients are private business clients, utility compa-

nies, industrial plants, and other business organizations. Also we have had a tremendous amount of experience in Federal, State, and local government activities.

I am sort of a shop floor guy, sort of from the bottom up. And our main expertise in our firm is in helping clients to develop and implement programs to control work, work management. And we have had a great deal of experience.

I have a little story to tell about some experiences we had with one government agency which I think will bring home where we come from in terms of what you can do in order to make government work better. About 4 or 5 years ago we acquired a couple of large contracts with the U.S. Postal Service. They were multi-million dollar contracts, and they were important ones. We were asked to work with the Postal Service people to develop and implement in some pilot post offices improved work management programs for their maintenance and custodial activities. I believe the Postal Service has somewhere in the neighborhood of 75 to 100,000 people working in these activities throughout the country.

We did successfully develop these programs and train the person—the Postal Service personnel to implement them in areas other than the pilots where we had worked with them. Nothing happened.

Meanwhile, by coincidence, we got another contract during this same period with the United Parcel Service which, as you know, is in a way a direct competitor of the U.S. Postal Service. And we did the same thing; we helped them to develop work management programs for the maintenance of their equipment and facilities throughout the country. And we piloted one area with them, and within 6 months they had carried it around the country to all their other facilities. And they saved a lot of money. If the Postal Service had carried it through they would have been able to reduce their force by some 2 to 3,000 people, and the savings would be between $75 and $100 million a year.

OK, why did one work and not the other? The one did not work, the Postal Service did not work, I believe, because of the fact that the unions were very militant and were right on top of this thing from the word "go". We met with the union leadership, national union leadership throughout the program trying to convince them what would happen.

Mr. SPRATT. Could I interrupt you? I just——

Mr. LAWSON. Yeah, sure.

Mr. SPRATT. The striking thing about that is UPS is organized also by the Teamsters, who are not known for being——

Mr. LAWSON. This is the story that I want to tell.

Mr. SPRATT. OK.

Mr. LAWSON. I mean, I think this is a good point, Mr. Spratt, that they were able to convince their unions this is a good program for all of us. But the Postal Service unions insisted and won the day by convincing the management of the Postal Service that they would go along with the program as long as the attrition rate was used to reduce force. And the attrition rate in the Postal Service is pretty low because of the high benefits and the salaries that are there. As a result, they could not have reduced it by 2 to 3,000 people for a long period of time.

Now, you are exactly right. I have worked with numerous organizations. We work with some utility companies like Consolidated Edison of New York and Commonwealth Edison in Chicago and Cleveland Electric Illuminating. They are all highly unionized. And the managers there have been able to work with the unions and convince them that we have got to work together to do this thing. And I think this is the difference between government and private business. I mean, they do work.

Through the years I have seen a lot of things go bad because of bad union. And there are bad managements in private business. Not bad managements, but managements that knuckle under and they are afraid to step out and do what is right. And a lot of those businesses go belly up. And I can point one to you that has a good local affiliation, and that is Eastern Airlines. The union killed that company.

So I want to encourage you to continue. I do not think that our approach of coming from the bottom up with work management programs is going to get you where you want to go in the foreseeable future—in the future. You have got to start from the top down and you have got to be strong. You have got to look at the government as a big elephant. And if you eat an elephant you do not take it one bite at a time, but you have got to take some pretty big bites if you are going to get anything accomplished.

And so I encourage this committee to follow through and to do everything they can to do this. There are a lot of community—or local governments around this country, and State governments that have done fantastic things in the last 4 to 5 years. And they are not all Republican-led people. But those that are successful are those that have strong leadership and a commitment by that leader.

And I cite for Indianapolis; Chicago, with Mayor Daley going in there and doing some real cutting and privatizing; Philadelphia, with a Democratic mayor who has done a good job on that; the State of—the State of Massachusetts and Governor Weld in his downsizing approach; and the State of Michigan has also been very——

So there are a lot of places around the country that have done this thing. But as I look at them, every single one of them has been led by a strong elected official to make things happen. It will not happen with the bureaucrats. They do not want it to happen. I thank you. I am over my time.

Mr. DAVIS. And is that idea still floating around, by the way, that you shared that the postal office would not implement?

Mr. LAWSON. Pardon me?

Mr. DAVIS. Is the idea that you gave the postal office still floating around or is that now buried and gone and no longer useful?

Mr. LAWSON. I do not know. I could—I doubt it because people come and go. And the people who were interested in this—if I can take another couple of minutes I would like to tell you more about the Postal Service because it is related to Mr. Clinger's question about technology in the government.

Before we started to work with them they had undertaken to develop a software program to control these 75,000 people throughout the country. They worked 5 years and spent $16 million developing

the hardware. And then they—or the software, excuse me. And then they began to shop hardware for the thing. And they spent another couple years spec'ing the hardware and getting it all set to go, and they finally signed a contract with IBM for about another $15 million, and the software would not work in the hardware.

So technology does not work all the time. I mean, I think the phone that Wendell White referred to is probably the place to start and then worry about these big things. I will stop and——

[The prepared statement of Mr. Lawson follows:]

Barney Lawson
Modern Management, Inc.
Charlotte, North Carolina

Thank you Mr. Chairman for asking me to testify today.

It was enlightening to hear other speakers talk about successes in reorganizing government units. I would like to give you some thoughts about controlling government costs from the eyes of a management consultant.

I have been in the management consulting profession for 43 years. For the past 23 years I have owned my own firm which serves clients throughout the world. These clients include numerous local, state, and federal agencies. Our work is in the area of assisting clients implement work management programs for the purpose of increasing productivity and reducing costs.

Personnel salaries and benefits are major cost elements in almost all government activities. If they are controlled, costs for total activities are under control. Our clients in government have had both successes and failures in implementing and using work management programs. Most failures to achieve results in government work management programs are caused by inaction either from fear of union pressures or loss of bureaucratic power. Our private business clients are motivated to follow-through to capture benefits.

Let me tell you about a specific experience with cost improvements in government.

About five or six years ago Modern Management was awarded multi-million dollar contracts with the U. S. Postal Service. The objective was to develop and guide USPS personnel in implementing improved management programs for maintenance and custodial operations in all post offices. These programs were developed, documented, and implemented in five pilot sites. They successfully demonstrated that current work levels could be maintained with 2000 to 3000 less workers when

the programs were installed in all post offices. USPS did not expand the program and savings were almost non-existent.

Coincidentally, we also assisted United Parcel Service with maintenance management programs for all their sites by implementing in a pilot site. UPS rapidly expanded the program throughout the country and captured significant cost savings.

Why wasn't USPS successful? The unions fought tooth and nail to limit results. Management agreed that no layoffs would occur and force reductions would be limited to attrition rates. Attrition rates in the postal service are minimal and would not permit any significant savings. On the other hand, at UPS, management and labor were motivated to utilize the program to strengthen the financial health of the company.

The purpose of this example is not to criticize the unions but rather managements' unwillingness to sell them on the desirability of compromising. Many local governments with militant unions representing employees, have worked successfully with them to realize benefits.

Your desire to reorganize, or downsize, the Federal Government is a noble and highly desirable goal. Reducing the size of the Federal Government can be related to eating an elephant. You can't eat it all in one bite. It must be eaten a bite at a time. Work management programs are necessary to provide acceptable service levels at reasonable costs but we favor a top-down, rather than a bottom-up approach to reorganizing government.

It requires leadership and strong actions to revolutionize government activities. Most bureaucrats say that the only way to reduce budgets is to eliminate or reduce services. This is true to an extent and in the Federal Government there are numerous activities which serve limited special interests, or imbedded bureaucrats, which can and should be eliminated.

There are many more activities which should be radically changed. Bureaucrats and politicians serving special interests protect these by accepting the present methods of delivering services.

Chipping away at minutia is a forever exercise and will not result in any meaningful benefits. Strong actions are needed. They will not be initiated by internal managements. Elected officials exhibiting powerful leadership are necessary to both initiate and assure success for government reorganization.

Look at the local and state governments that have successfully captured major benefits for their citizens by reorganizing, privatizing, and controlling activities. You will find that, without exception, effective leadership by a chief executive has motivated bureaucrats, unions, and citizens to join together for the common good. Indianapolis, Chicago, Philadelphia, Massachusetts, Michigan, and others are prime examples of how business as usual is no longer acceptable in government.

I hope the Committee on Government Reform and Oversight is successful in overcoming political, labor, and bureaucratic protectionism and will initiate and follow through with meaningful changes in operation of the Federal Government.

Charlotte, North Carolina
October 20, 1995

Mr. DAVIS. Thank you. We will have some questions for you, I am sure. Mr. Rolfe.

Mr. LAWSON. Sure. Sure, let Chris go.

Mr. ROLFE. Again, my name is Chris Rolfe. I am with Duke Power Co. and I am the vice president of——

Mr. DAVIS. You were already ranked, what, the best, most efficient power—one of the two most efficient power companies in the country by one of your predecessors testifying.

Mr. FOX. According to the taxicab driver.

Mr. DAVIS. Yes. And the taxicab driver in—where was it?

Mrs. MYRICK. In Oregon.

Mr. DAVIS. In Oregon said that. [Laughter.]

Mr. ROLFE. Ex-employee. [Laughter.]

Let me—what I am not going to do is read my statement. I would like to hit a few high points that I think may be germane to the committee. First is that we are not a government agency, and yet because of monopolistic situations we tend to act and feel and taste a lot like one. And if you slice us, in many ways we exhibit many of the same characteristics. So my comments I think are germane both ways.

Second, the reason I am here is when Bill Lee called me and talked about this hearing, his point was how important it was to Duke, the citizenry, the people that we get government right. And Bill is passionate about that, and we share his passion.

First, let me tell you what I am not going to talk about or not even my competency, and that has to do with privatization. By the way, in private industry we call that outsourcing. And what that really does is, that allows an organization to do one of two things: It allows you to focus on your core competencies, things you are good at and things that you are not good at. And every industry in America is wrestling with that right now. And at Duke we are getting out of businesses we do not need to be in. And, for example, tree trimming, that is just not what we do well. We run plants well, we serve customers well. And as you get out of those and you focus on what you do well and you bring other people in to support you.

The second thing is that when you outsource or privatize you bring the discipline of the marketplace to bear, which of course drives cost out and service up. My only point is we encourage that. That is a rigorous, disciplined process where the government has to decide what businesses it needs to be in and which ones not.

What Bill wanted me to speak about was our approach to total quality management. And I understand that a lexicon and jargon are job security; I like to use the quote of Jim Baucon at Ford in 1981 when Ford turned themselves around, and his comment to me was, "Chris, Ford has had 57 quality programs in the last 14 years. What we had to figure out was how to do our jobs right." So when I use the term "total quality management," I am talking about doing things right. Of course, as Jim went on to point out, "What works in Tokyo will not work in Dearborn; what works in Detroit in the car industry will not work in Charlotte in the utility industry. That is your job; you go home and figure that out."

In the late 1970's Duke Power's costs were rising, our technology was mature, our customer satisfaction was eroding, prices were

going up, and it was not the best of times in the utility industry. Needless to say at Duke, we also had something that we called "we ran out of cash." And if you have lived around the power company you never want to do that twice. It is carved in stone in the executive offices.

In 1988, we had our first corporate-wide layoff. Now, to some extent—and you have heard this from other folks here today—is that utilities, like the government, feels a lot like lifetime employment. And to our teammates at Duke that was a draconian event and great pain and great questioning the mission of the institution.

That led us in 1990 to pursue a path of continuous improvement. But I will tell you that we approached it holistically, not program of the month. You must fundamentally change the culture and nature of the enterprise because all of the good ideas that can be implemented, the system, the bureaucracy just eats up like Pac Man if you do not fundamentally change things.

So at Duke we went in and we changed everything, from how we planned, to how we reward, to how we promote. You must take a holistic approach. Today we use the Malcolm Baldrige National Quality Award criteria to measure the competency, the effectiveness, and how well the organization is doing. My first recommendation is that every government agency assess themselves against those criteria. They are the best we have found for how well your organization functions, and I think they apply from the Charlotte Hornets to the executive branch of the government.

The bottom line in industry is always results and not the program of the month. But at Duke productivity increases, our organization is flatter, our customer satisfaction is up, and our prices are down. With all of that said, the most difficult part of all of this is the elimination of jobs. As you drive efficiency into the organization, you get clear about what business is, you eliminate jobs. To not recognize that and understand that and deal with that up front is inappropriate. Thank you very much.

[The prepared statement of Mr. Rolfe follows:]

Duke Power Company
422 South Church Street (PB04J)
Charlotte, NC 28242-0001

Christopher C. Rolfe
Vice President
Organization
Effectiveness

DUKE POWER

October 20, 1995

Good morning. My name is Chris Rolfe, Vice-President of Organization Effectiveness with Duke Power Company. Duke Power is the sixth-largest investor-owned electric utility in the United States, serving 1.7 million customers across a 20,000 square mile service area in North and South Carolina. I'm pleased to be here today before the Committee on Government Reform and Oversight on behalf of Duke Power to share some of our experiences in integrating total quality into our business. We believe that good, efficient government is in the best interests of both Duke Power and our customers. We all have a stake in the long-term growth of not only our region but of the nation as a whole. And, although Duke Power is not a governmental agency, we believe that the principles we have applied to improve our business can be applied to government as well.

When we think of reorganizing or re-engineering our government we think of privatization. Privatization is similar to outsourcing at our company, and it does two things for us. First, outsourcing gets an enterprise, or the government, out of businesses that are not its core competencies and allows us to focus on what we do best. At Duke Power we outsource things like security and tree trimming because they are not our core competencies. Second, outsourcing brings the discipline of the marketplace to previously monopolistic entities. But, I'm not here today to talk about the merits of privatization. Privatization can be a good option to pursue, but we think there are other ways to improve efficiencies in business through the application of cutting edge management practices, just as we have done at Duke.

The wake-up call came for us in the form of competition, beginning in the late 70's. The environment began to change with declining sales and rising costs. We canceled power plants, were starved for cash, had construction layoffs and massive rate increases. And, in 1988 when we had the first-ever non-construction layoff, we shattered forever our contract with employees. It was painful, but we knew the environment was changing faster than we were, and if we didn't take an active role in managing our destiny then we just might not be around to have one.

We introduced total quality management at Duke in 1990. We took a "holistic" approach--we organized around quality, implemented a strategic planning process and created an awareness around quality through intensive communications and training for all employees. We then aligned our systems around quality, established measures of our progress and deployed the tools necessary to integrate quality into the business, such as business process improvement. And, we celebrated our successes along the way.

We found that aligning our systems around quality was critical and we linked rewards to company performance. We revamped the human systems including compensation and leadership development...and also aligned other systems including budget, planning and communications.

Today we are doing more and better planning. We use the Malcolm Baldrige National Quality Award criteria as a framework and a measure of where we stand relative to world-class companies. We are driving toward operational excellence, customer focus and more cost reduction, with a major concentration on improving our processes. We are giving heavy emphasis to growth and increasing sales and market opportunities through our non-regulated businesses.

Is that improving our business results? Most definitely. Just look at what we have been able to accomplish:

- Productivity, defined at Duke as Kwh delivered per employee, has increased 8.2% per year since 1990.

- Our management span of control has increased 6.2% per year since 1990.

- The number of customers served per employee has increased 6.4% per year since 1990.

- Our employee injuries have decreased 50% since 1992...and we have an aggressive goal of being accident-free by 1998.

- The five year cumulative total return for Duke is significantly higher than other S&P Electrics and the S&P 500. Using 1989 as a baseline year with a $100 investment, Duke value has increased 76%, while the S&P Electrics were up only 38% and the S&P 500 was up only 52%.

- Our Baldrige Assessment score is on the rise, with a 125 point increase over the past three years.

- Our nuclear capacity factor is up about 3% per year since 1990. Our INPO and SALP scores are constantly improving and we have completed outages at our nuclear plants in record time.

- Our total cost per Kwh we deliver is dropping.

- Our bond rating is among the top in the industry among all four rating agencies. Duke is consistently a "top five pick" by all agencies for investment of choice.

We have reduced the number of employees over the past five years from more than 20,000 to a little over 16,000. We recently announced that we would be eliminating approximately 900 jobs by the first quarter of 1996, which will put our workforce very close to 15,000. And while any workforce reduction is painful we know that quality improvement doesn't cause jobs to go away...competition and a changing marketplace do.

What we're doing must be working. We haven't had a price increase in many years. But we're not finished and we realize that there is much work left to be done. Implementing a quality process for us is not a "nice to have" but has become a condition for doing business. Total quality is just common sense and it's good business. And we know at Duke Power that it works.

We encourage the United States government to pursue any and all avenues to improve its efficiency and operation. On behalf of Duke Power, I thank you for the opportunity to make this statement today.

Mr. DAVIS. Thank you both very much. Let me start the questions here with Mrs. Myrick.

Mrs. MYRICK. Well, I wanted to say, Chris, we appreciate all that you and Duke have done over the years, to be a part of creating some of the solutions that government has put together, very much. When you talk about eliminating jobs and, you know, what you have done, as you said, starting in 1981, how have you been able—I know the job is sacred in the fact the person does not want to lose it. But, you know, internally, can you just kind of briefly tell us some of the things that you might do to—for the employees to accept this change and be a part of it? I mean, are they actually helping to make those decisions? It is not top-down but——

Mr. ROLFE. I will answer that with a little bit of a tale. I was recently talking with a consultant who said, "Chris, tell me about Duke Power's programs to drive efficiency in." And talking in a very top-down way.

And I said, "Well, I cannot do that because now we have 15,000 people driving efficiency, coming up with ideas, changing the way they do business, some of them even eliminating their own jobs."

And they said, "How did you ever create that?"

And I said, "Well, you have got to do that by design. There must be rewards and opportunities and recognition. If someone eliminates their job you do not lay them off, you promote them. It is a fundamentally different way of thinking."

With that said and done, you must align your fundamental human resource systems. You will hear that from me over and over. If people are rewarded for longevity and non-risk taking and bureaucracy, you will produce that. If they are rewarded for serving customers, driving efficiency into operations, costs out, then you will get that.

But to achieve that what you must do is give people information. If you look at a company like a UPS which has people serving customers on the front line making very important decisions, not going back up for approval, these people have information about the customers in the truck. And it takes fundamental information to make decisions. Communications, information, and redesign of H.R. systems. Those are the way you start to do it. And if you ignore those things it will just be management fad of the month. If that answers your question.

Mr. DAVIS. Thank you very much. The gentleman from South Carolina.

Mr. SPRATT. Thank you both for excellent testimony. I was reminded when Wendell White was here earlier talking about—he mentioned Mike Walsh, and Mike Walsh is an old friend and a law school classmate and he—I think I heard the speech he heard him make on CSPAN. The word he used was not "persistence" but "relentless."

Mr. ROLFE. Exactly.

Mr. SPRATT. And he also liked to use the word "holistic," which brought him back to mind that it had to be absolutely total change top to bottom. And I think the sleeper issue—it seldom comes to the surface in the Federal Government—is how do we attract better people to work for the government? We have just gotten through rewriting the procurement code for the fifth time since I

have been in Congress, try to improve the efficiency of the manner in which government procures goods and services. And I added a modest amendment that would allow the Defense Department some more latitude—somewhat more latitude in getting people outside the Civil Service or in at least promoting and rewarding and penalizing those who worked well within the procurement service, not being bound by the rigid rules of the Civil Service, particularly on big weapon system procurement. I think it is a fundamentally critical problem and one that is not being addressed at all at the Federal level.

And it—unfortunately, as we trash government, particularly the Federal Government, as we parade these anecdotes about how inefficient and horrible it is, we are only—only serve to discourage anybody from wanting to work with the organization who has very high aspirations. And so we work against the—what I think is the ultimate goal.

Let me ask you just a couple of particular questions, Mr. Lawson. When a report like yours gets submitted to the Postal Service usually some disgruntled ratepayer—and Duke Power Co. has had this experience certainly in the 1970's—will bring it to the rate commission and say, "This means—this is tangible evidence they can do cost—they can do business for $75 to $100 million less." Is that process not working in the ratemaking procedures of the Postal Service?

Mr. LAWSON. I do not know whether it is or not, Mr. Spratt. But—because I think you have to look at consultant reports through multiple eyes. Being—having been in the business as long as I have I am going to be real candid. Even ourselves, who are the best consultants in the country, have jobs that fail. As a matter of fact——

Mr. SPRATT. Have jobs that are what?

Mr. LAWSON. Have jobs that fail. Once we put it in we walk out the door and a week later, a month later, or a year later it is in shambles and they do not use what they get.

In the government it is even worse because so many government agencies hire consultants to make studies. And the specifications of the studies are made up in such a way that they give them the answer they want. In addition to that, there have been a lot of studies over the years made by consultants who elected officials have engaged to come in to make what they call productivity studies for the purpose of determining where can we save money. And I remember there was one made right here in North Carolina several years ago. And they made the study and they said, "If you will do all these things you will save $60 million a year." And they did not do any of the things. But 2 years later when the Governor was up for reelection he bragged about saving $60 million. And that is the way the government works with consultants.

So, internally I think it is very difficult to get things up to the top level. We were hired by a group down in Oklahoma to do this thing. And I doubt if the people in Washington were really aware of everything that was going on.

Mr. SPRATT. Thank you both for excellent testimony.

Mr. DAVIS. Thank you very much.

Any questions over here? Mr. Fox.

Mr. FOX. Thank you, Mr. Chairman. I would ask a question to Mr. Rolfe. With regard to your success in total quality management at Duke how were you able to instill with the employees the—you know, what incentives were used to get them on board, other than the company winning an award or the company doing better? How did they tie it back to their own job to be preserved or their own situation to be improved so that they could buy into it?

Mr. ROLFE. Sure. At Duke, by the way, the acronym is WIIFM, "What is in it for me?" which is a——

Mr. FOX. Like most other places in the country, right?

Mr. ROLFE. Sure. Why would you not ask that question? That has to do with the communications that Mrs. Myrick asked about. People have to understand that the future of the enterprise and their futures are inextricably linked and it is not an "us versus them," it is truly us. And collectively we will succeed or fail. And I have got to tell you, that is not an easy message to get through the organization.

With that said, we measure that understanding. That is one of the key indicators; that I understand that my job depends on the success of the enterprise and serving the customer in the marketplace. We measure that through the employee opinion survey. And that is one of the key questions that we watch. And the growth in understanding of that question is probably the second most positive trend on the employee opinion survey.

So, you are exactly right, it is a communication, it is an understanding, it is both intellectual and emotional. But you must do that. And you must—and it must be true. It cannot be fictitious. People must see how their——

Mr. FOX. How do we get the leap of faith from the private sector to the public sector? Because in the public sector it has always been, well, if you have been here a few years you are not going to lose your job ever so—but in the private sector if you do not do a good job you may be out of a job. So how do get that leap of faith in the public sector that maybe their job might be—might not be there, or your chances for advancement within the organization, be it public or private sector, are contingent on to what degree of enthusiasm and increased experience level you are achieving in order to make your self-worth be increased?

Mr. ROLFE. So I am going to answer that——

Mr. FOX. So I am asking you how to take your private sector——

Mr. ROLFE. Model?

Mr. FOX [continuing]. Model and then put it on the public sector?

Mr. ROLFE. Let me preface that by saying that I spent 2 years of my life traveling America and Japan, understanding how these companies that have—that you read about do what they do; the Motorolas and the Toyotas. And I remember I came back to Duke Power and I would tell these stories. And they would say, "Well, Chris, that is very interesting. But, you see, we are a utility and none of that applies to us. Because they are in real business and we are in quasi-business."

So I have spoken to a number of government agencies over the last several years. And they say, "Well, Chris, that is a great story you tell about Duke Power successes. But, you see, none of that applies to us because we are government." So with that said and

done: One, it absolutely does apply, but you must think about it differently.

And I come right back down to it. If you do not fundamentally change the systems of promotion, success, benchmarking where Congress says, "Here is a standard that UPS can deliver mail for. Meet it or we will get out of the business." Which is what we have to do with our company. That is how you get there. But that is the value of benchmarking, competitive comparisons, and changing the way the company operates.

Mr. FOX. Mr. Lawson, did you want to comment on that at all or was it more—I did not know if you had a different——

Mr. LAWSON. Another thing I—there were some previous questions that Mr. Mica and Mr. Davis asked that I thought I might want to mention if I had a chance. And first of all, Mr. Davis asked about some relationship between the Federal Government and the local governments and how they are hindering or helping them to operate. And I believe right here in Charlotte we have a prime example where the Federal Government has messed up what a local government can do. And that is in our transit system.

We accept these Federal funds, and it is not very much any more. It is only about less than $1 million a year, I think, just to help on the operation and you buy a few buses. And that is it, man; you cannot move. Not only that, you have to do what people up in Detroit and Pittsburgh and New York and other people—you got to have a union to run it, you have to have a collective bargaining agreement in order to operate those buses which have been paid for by the Federal Government.

Mr. DAVIS. I think it is Section 13[c] makes a replacement——

Mr. LAWSON. Yes.

Mr. DAVIS. We came very close to getting rid of it this year in the House.

Mr. LAWSON. Did you?

Mr. DAVIS. We lost by just a handful of votes.

Mr. LAWSON. Well, the answer there I think is—what we had to do here in Charlotte was, the city owns the thing, pays for it, and we had to hire a front guy to run it. And we pay him an administrative fee to run the transit system. So the answer there is——

The other thing I would like to mention, just one thing here, and that is Bill James talked about an oversight committee for accountability on privatization. I believe it is mighty important that whatever you are able to accomplish in terms of forcing people to do things, somebody is watching what they do and there is some accountability and feedback on what in fact really happens. Because a lot of savings that are talked about, as Mr. Rogers from the Concord Coalition mentioned, there is a lot of funny savings that go on and there is a lot of temporary savings. These things should be permanent and measurable savings or else, you know, you are just blowing wind.

And finally, Bill James also mentioned the problem of selling airports and other assets. In April 1992, President Bush issued an Executive order which made it easy for local governments to divest themselves of assets that were initially funded by the Federal Government. And I believe that this Executive order ought to be pulled out from the cabinet by your committee and you ought to look at

that and see if you cannot push to have that implemented more. It would enable cities like Charlotte to translate that airport, which is a good economic development tool but which is bringing no revenue at all into the city coffers, into a situation where you could sell part of that thing or privatize it and get funds out shared with the Federal Government, so that we could reduce our debt and put more money into schools and into parks and the things that we—and the broken infrastructure that we have. So I just wanted to mention that.

Mr. CLINGER. Just on your last point there, that is a source of major debate right now going on in the other committee on which I serve, which is the Transportation and Infrastructure Committee. Right now, as you know, under existing law no money generated by an airport can be used off-airport. I mean, and that has been a major——

Mr. LAWSON. Exactly. Exactly.

Mr. CLINGER. Mayor Riordan in Los Angeles really brought this to the fore because he was talking about privatizing LAX and then using the funds for the city. And I think it makes some sense. The argument against it is that these are people who are transitting that airport, maybe you do not have any real relationship to the city. And, you know, that they are—there is some other—some of the traveling public resists that happening. I mean, they feel that it should be kept at the airport, so that——

Mr. LAWSON. Well, that is like there was some talk about selling our cemeteries here. See, Charlotte is in the cemetery business, as well as the entertainment business, the airport business, the utility business.

Mr. CLINGER. Right.

Mr. LAWSON. And they also govern.

Mr. DAVIS. Were there not some grave concerns about that or——

Mr. LAWSON. Oh, yeah. I mean, gee, you know—[laughter.]

You know, whatever you are going to sell there is somebody that hopes you do not do it for some reason.

Mr. BASS. You are going to dig your way out of that one.

Mrs. MYRICK. Yes. [Laughter.]

Mr. LAWSON. And, boy, they raised all kinds of heck. And even—I am a Catholic, and my bishop came down and he made an impassioned plea not to sell the cemeteries because the poor people cannot get buried. Well, they will get buried. But why does the city have to run it? Thank you.

Mr. CLINGER. Mr. Davis.

Mr. DAVIS. If I could just ask a couple of questions. This is great. I could stay here all day and talk about——

Mr. LAWSON. Well, so could I.

Mr. DAVIS. I can see that. But I have always felt that you—one of the reasons we are sending some of these issues back to the States, we are taking away so many—and not increasing unfunded mandates, that came out of this committee. It is so hard to get any change in Washington because you—as you talk with the Postal Service you have interest group blocking interest group, and it is difficult to get change there. But out here in real America you get more innovation and more changes.

And by and large, when you start sending programs down to the States you are going to get some States that frankly do not do as good a job as Washington, and you are going to get some who do a lot better job. And over time you are going to—the States that do not do as well should learn from the ones doing a better job.

But you still have the underlying problem in government, the fact that we are—what drives the bottom line? In business it is the dollar. You would not be laying off all those people if you did not have to worry about answering to shareholders and the bottom line. But in government measuring efficiency is much, much more difficult. Privatization I have found can be one tool sometimes to measure that because you can go out in the private sector and measure how well you are doing something versus how well somebody else can do the same thing.

But I just—kind of in an open-ended way: Government is not driven by the bottom line. Government has certain rules and regulations on procurement, on open meetings and so on that you do not have in the private sector, that inherently make the private sector more efficient. I am not sure where you find the balance, but I just throw that in as a general comment to both of you.

Mr. ROLFE. Yes.

Mr. DAVIS. How we can make government more——

Mr. ROLFE. And it is problematic, but we believe solvable. I mean, I really want to say that. Yes, but you can think your way through that.

Mr. LAWSON. If you are managing an activity, you know, just put it like an island all by itself, and if it is being managed it does not make any difference whether it is within the government or utility or private business or a non-profit organization. There are just good rules of management you have got to follow in utilizing your resources.

Mr. DAVIS. But the other problem for government is—and David Osborne makes this point in his book about reinventing government—that you have a lot of people in government that are doing good jobs, but in many cases they are performing tasks well, but their task is not worth performing, they are written under regulations that should not have been written and on forms that did not need to be printed. And how do you measure—and I guess that gets philosophical sometimes over what——

Mr. LAWSON. Well, I think there are two measures you want. One is what results you are getting, what service you are providing.

Mr. DAVIS. Exactly.

Mr. LAWSON. But I think the other side of the coin is what is it taking you to do it? And I told you our whole area of work is in the area of work management. And in any work management activity most of the government units I see do not have any work management. Things just happen. And if they reduce manpower they do not do some things they did before. And if you are in say street maintenance you do not know that for maybe 5 or 10 years down the road when the streets fall apart, because today it does not make any difference if you do not repave it. So you need to measure what they are doing. And it is possible to measure enterprises,

human enterprise. And I encourage that in any oversight committee.

Mr. ROLFE. Let me—sir, in the early 1980's when our prices were going up and we would get together in rooms much like this and fret over cost reduction and maybe have a program or something around that, the fundamental question was senior management had no idea which activities did not add value. We just were not close enough to the work. I mean, we could meet and we could talk, but we did not know. See, only a few people—but what they did not know was where this enterprise had to go and what the competition and the market and the customers were demanding. And, you see, we had not told them. I mean, because they did not need to know, or so we thought.

So at Duke—and I do not want to bog us down in our lexicon, but we call it planning, some people call it MBO. It is the clarity of the organization around what business we are in, what our customers demand, and what it takes to stay in business. And we found that as we pushed that down people would start saying, "Why do I fill out this form? It is a waste of my time and yours." And gradually the efficiencies start to come bottom-up. But it is premised on the fact that the senior management of the enterprise, the senior management of the department, if you will in government, knows what it is trying to accomplish and communicates that.

So yes, they are out there, but I do not think you are going to find inefficiencies like that top-down. I do not think you are smart enough.

Mr. DAVIS. I concur. I think you are probably right, too.

Mr. ROLFE. Yes. And it is a laborious cultural change process because we did not train workers to work that way. But where enterprises have, the results are staggering and irrefutable.

Mr. CLINGER. I think that is a lesson that we could very well take to heart.

Mr. ROLFE. May I make one other comment about selling of assets?

Mr. CLINGER. Sure.

Mr. ROLFE. And I have heard this. I am a simple guy and I am not an accountant, I am just an engineer. But I know at home we understand that if you sell your home, which is an asset, a capital asset, to cover living expenses, in the long run you will be bankrupt. You are just kidding yourself if you think you are liquidating assets to create short-term cash-flow. And if the purpose is to liquidate to create a paper boom and then not fundamentally fix the systemic problems, 18 years from now our children will be right back in this room.

Mr. DAVIS. If I could, I mean, it is reoccurring—you need reoccurring revenues for reoccurring expenditures. And when you take a one-time shot like that——

Mr. ROLFE. Exactly.

Mr. DAVIS [continuing]. If you do not invest it in capital——

Mr. LAWSON. Exactly.

Mr. DAVIS [continuing]. Call it, your base does not change. You are correct.

Mr. ROLFE. The Rolfes can sell their home and if we redeploy the capital——

Mr. DAVIS. That is a good—that is a good analogy.

Mr. ROLFE [continuing]. In a higher value use, that is smart.

Mr. DAVIS. And most local governments do what you are talking about. They—not all of them, but a lot—the good ones do. But the Federal Government does not do that at all. And that is a good point. We use the one-time revenue and it does not do anything to the base.

Mr. ROLFE. No.

Mr. SPRATT. Could I observe, Mr. Chairman, the witness for Duke Power Co. just made a good case for not selling the Power Market Administration.

Mr. ROLFE. We would like to speak about that. [Laughter.]

Mr. CLINGER. Gentleman—Mr. Rolfe and Mr. Lawson, thank you very, very much.

Mr. SPRATT. He gets an opportunity for a rejoinder on that. Do you want——

Mr. CLINGER. He says he wants to speak about that.

Mr. SPRATT. Oh, OK.

Mr. ROLFE. But there are efficiencies to be gained in the marketplace. [Laughter.]

Mr. CLINGER. Thank you both very, very much.

Before we go to our second open mic segment, Congresswoman Myrick informs me that Mr. Pat McCrory, Mayor Pro Tem of the city, is present. And Mayor, would you like to speak from that podium right up there for a moment.

STATEMENT OF PAT McCRORY, MAYOR PRO TEMPORE, CHARLOTTE, NC

Mr. MCCRORY. I just want to take a minute of your time first of all to thank you for coming to Charlotte, NC. And I especially am very pleased to see our former mayor, Sue Myrick. Sue, you are looking very comfortable in that chair. [Laughter.]

And I urge you not to get too comfortable again.

Mrs. MYRICK. Do not worry.

Mr. MCCRORY. We are very pleased that you are here today. As you see from the speakers that we have had this morning, from Mayor Vinroot to Wendell White to Barney Lawson to Chris Rolfe, we believe in innovation, we believe in solutions in Charlotte, NC. And I think the main message I want to give to you regarding the Federal Government is: Let us be innovative. Let us find solutions. Do not put road blocks in our way.

As Mr. Lawson stated, we have a major road block in the area of transportation, where we are looking in the area of mass transit with very limited dollars but very tough needs in this community regarding transit. We look for more innovative ways to operate our transit facilities, and yet we are constrained because we take less than $1 million from the Federal Government.

In fact, we are questioning now is it worth it to even take the money. Could we do better without taking the Federal dollars, and would we end up saving money in the long run because of the innovative ideas that many of you have heard today? That is a very, very difficult decision. But it is a decision that we are now con-

templating at the local level, on whether or not it is worth it to take the Federal dollars if you put so many strings behind those Federal dollars. So what I ask of you is first look at the strings that you are tying our hands with in not allowing us the flexibility, the adaptations to our specific local needs.

The second major point I want to give you is this, is that as you pass more things down to the State, which we are very pleased with because we—as a Republican and as a conservative, we believe the closer to the people you are the more you can be adaptable and flexible to the specific needs. As Chris Rolfe says, what works in Japan might not work in Detroit, but still some of the same concepts can apply and you can then make them adaptable to your own situations.

But what we ask of you is: Remember, as you hand it down to the States, we in the urban cities also must fight with the States. North Carolina is a State which is dominated by rural legislators which do not have the same urban needs and face the urban problems that we have here in Charlotte, Winston-Salem, Greensboro, and Durham. So also give us some flexibility, even in working with the State, to be able to obtain some of those fundings, and also force the States to untie our hands at the city level. I do not have the specific way on how to do that, but as Sue would tell you many stories here in North Carolina during her tenure as mayor, during her two terms as mayor, is that we not only have to fight with Washington, we also have to struggle with Raleigh to give us that local flexibility. That is a major challenge that we have in these—in our cities right now. So keep that in mind, also.

And again, welcome to Charlotte. We hope you will get lunch sooner or later today. We actually have very good food here in Charlotte and we hope you enjoy one of the fine restaurants in our city. Thank you very much. And Mr. Spratt, it is good to have you nearby, also.

Mr. SPRATT. Thank you very much. I wanted to take them to Spratt's today but unfortunately we have got lunch back here.

Mr. MCCRORY. Mrs. Myrick may try to take you to Green's Hot Dog down the—down—[laughter.]

Mr. CLINGER. Thank you very, very much. Just an anecdotal thing on your point about, you know, do not tie us down with too many regulations, too many restrictions. We did a study of when we used to be in the business for construction grants for wastewater treatment systems which we are no longer involved in, but a study was done as to how long it took if you went through the process, through the EPA funding process and all of that and all the requirements, it was about 11 to 12 years from start to finish, from the inception of the idea to the completion of the project. Whereas if you went into the bond market, basically ignored the Federal Government altogether, you could do it in about 3. So there is an incredible lag there.

Mr. MCCRORY. Well, in fact, that is a strong argument to allow us flexibility. Change is occurring so quickly in technology and competition and just determining what role government should be in. Chris Rolfe—I also work for Duke Power Co. In fact, Chris is my boss. The utility industry is changing so rapidly, as with—as is IBM, as is 3M, as is Motorola. Government is starting to change

and being forced to change at the same pace. Because we in Charlotte, NC, are competing with other States, with other cities, and now other nations in trying to keep this a city of opportunity. And so if we are going to be competitive at this city we need to be able to move much faster than we ever thought of in the past. And that is a selling point to Washington, and that is also a selling point that we have to make to our constituents and also to our city employees. That is a change. And that is our biggest challenge, is change right now.

Mr. CLINGER. Thank you again.

Mr. MCCRORY. Thank you again.

Mr. CLINGER. Now I have got to pull some tickets out of our grab bag here and see if any of our people would like to participate at this point. The number I have is 6548. There we are. And while this gentleman is coming down I will call the next number, which is 6551. And if you would, just state your name and your affiliation, if you have one, sir.

STATEMENT OF TOM BAILEY, GUILFORD COUNTY, NC

Mr. BAILEY. My name is Tom Bailey. I was contacted by my party, the Libertarian Party, about possibly testifying before your committee. I make the same caveat Mark Seiler made, which is that I am speaking unofficially. I have not submitted my remarks to the party and they are my own. The reason they contacted me was that I am a Libertarian who was holding public office. I have had a seat on the Guilford County Board of Adjustments. Sometimes I call myself a pari-judicial. The Board of Adjustments is a quasi-judicial body which makes rulings on the zoning ordinance. They have the power to grant special use permits and they can interpret that ordinance.

It is an interesting position for a Libertarian. As you may be aware, Libertarians are not keen on governmental interference with private citizens' use of their property. At the same time, they do believe—Libertarians do believe that a group of citizens has every right to enter into a contract between themselves agreeing to specific uses of their property, and they may then hire someone to administer that contract if they wish, which would be a governmental entity in this case.

However, I would like to testify concerning something that has nothing to do with my public office. If you are sincere about reforming government I would like to suggest that you start by giving us back our vote. The only power we as citizens have over our government, short of armed rebellion, is our power at the polling booth. Indeed, our founders instituted that power to substitute for armed rebellion. Unfortunately, our right to vote has been infringed to the point of meaninglessness. North Carolina has instituted certain ballot restrictions that are not founded on a constitution.

The State has passed ordinances forbidding the Board of Elections to count any vote for anyone who is not a qualified candidate by meeting these greater restrictions. The State instituted these laws in the name of protecting the voters from cluttered ballots and frivolous candidates. The result has been that in the 1994 elections there was only one qualified candidate in two out of three races on my ballot. By statute, votes for anyone else could not be counted,

even if the vote was for someone who met the constitutional requirements to hold the office.

Recently I have noticed the paper or the media has had a good time poking fun at Saddam Hussein because of his recent election where he received 99.96 percent of the vote. But apparently—that says to me that apparently 4 people in 1,000 were able to cast a vote against Saddam Hussein.

I am in the Sixth Congressional District here in North Carolina which is Howard Coble's district. I know Howard Coble; I have met him and spoken with him on several occasions. I like him. He is a fine man. But he was one of the candidates on my ballot who was running unopposed. Howard Coble did better than Saddam Hussein; he got 100 percent of the vote. Not only he got 100 percent of the vote, but two-thirds of the candidates on my ballot got 100 percent of the vote.

Mr. DAVIS. Can I ask you a question, Mr. Bailey? Not to interrupt, but that is because nobody ran against him; right?

Mr. BAILEY. Somebody should have run against him. However, it is——

Mr. DAVIS. Right. But, I mean, nobody filed. Anybody could have filed against him.

Mr. BAILEY. Only another Democrat could have filed to run against him because—or if you were going to be an independent you would have to petition. Now, our most famous example of an independent recently is Ross Perot. Ross Perot spent $2½ million to achieve ballot access in all 50 States. That was 250—or $2½ million that none of his opponents had to spend. I mean, you know, Mr. Clinton was not—so Mr. Clinton had a $2½ million jump on Ross Perot. The same applies for the Libertarian Party. It cost the Libertarian Party three-quarters of their treasury in 1992 to achieve ballot status. Now, that was in addition, before we spent the first dime on campaign.

But all that is beside the point as far as political parties is concerned. What I am really complaining about is the fact that I, as an individual citizen, was not allowed to cast my vote for anyone except Howard Coble. Effectively this disenfranchises me. I have lost my right to vote. I think that—I mean, it is—like I said, I liked Howard Coble. But he voted for GATT and he voted for NAFTA, both of which I oppose. Now, whether I am right or wrong in opposing GATT or NAFTA, I would like to send a message to Howard Coble. I—you know, my guy does not have to win, but you at least have to count my vote. And my vote could not be counted. You know, I could vote for Richard Petty. He is a famous Republican in my neck of the woods in the Sixth District. I believe there could be a write-in campaign generated for him. But, you know, we still might not be able to win, but at least we can send a message.

Mr. CLINGER. You are saying that under State law you could not mount a write-in campaign for another candidate?

Mr. BAILEY. Not unless the candidate who I wrote in would have to meet additional requirements——

Mr. CLINGER. I see what you are saying.

Mr. BAILEY [continuing]. Besides those in the constitution.

Mr. CLINGER. You are saying that the party—the two-party system basically is precluding you of——

Mr. DAVIS. No, I think he is saying an independent can file, you just have to go through some added——

Mr. BAILEY. An independent has to petition, though.

Mr. CLINGER. An extra step. Yes.

Mr. BAILEY. And what I am saying is it requires a great deal more effort. You spend a great deal more money which is not directed at campaigning which your opponent does not have to do.

Mr. DAVIS. But you spend a lot of money getting nominated through the party process that you would not have to if you filed as an independent.

Mr. BAILEY. That may be, except in the case of petitioning, the party prints up the petitions, circulates the petitions, possibly hires people to gather the signatures. Whereas in a primary election the State pays for renting a polling place, providing the ballots, collecting the—or the votes, counting the votes. All of that is paid for by the State. Whereas the petition is all paid for by the party. It is not a fair comparison.

Mr. CLINGER. Thank you, sir. I think we are going to have to move along and get some other comments here. Thank you very much for participating.

Mr. BAILEY. Thank you.

Mr. CLINGER. Do we have 6551? And following that would be 6547, if 6547 is in the audience.

Good afternoon.

STATEMENT OF CHERYL COTTINGHAM, GASTONIA, NC

Ms. COTTINGHAM. Hi. I am Cheryl Cottingham. I am from Gastonia. I am here as an individual. I am here as a family owned, small business person. And also I am here with Citizens Against Government Waste. Creating a 21st century government, yeah, we definitely do but we have got to get there, so we have got to reform and downsize government, as you all know that.

I am here on selfish motives, too. The Clean Air Act, the Clean Water Act, the EPA. Like I said, we have a small business. They regulate pollutants the wrong way. They go after the ones that are already permitted, already in compliance, not the ones that do not. And that would eliminate pollutions all over.

I am trying to keep our business alive. Right now they have started the one on the chromium regulations and it is a killer. It requires tremendous paperwork, it requires a lot of money, a lot of monitoring. We have 10 employees. You have to even get your paperwork certified by an engineer, which a lot of large companies have but not small businesses. So they forgot about common sense and the small business when this bill was wrote, when the law was passed. It became law January 1, 1995.

But I am—we all need to fight pollution, that is true. But in our case we emit less than 1 pound a year, but we are treated like we emit 70 tons, which is truly unfair. And I am hoping that maybe you all can do something to help us with EPA regulations and OSHA and everything. Small businesses do need help.

The Clean Water Act, there is just more regulations. Enforce what is in effect. Do not allow dumping, do not allow direct discharge to creeks and waters, and that would help eliminate tremendous amounts of pollution.

And the American Family Owned Business Act, I hope you can help us out there, too, to relieve some tax burdens and help businesses get passed on to the second generation.

I would like to see a bill passed on showing all hidden taxes so everybody can see what they are paying for. There is labeling laws, everything has to be put on a label, content, safety hazards, that. Why not go ahead and attach those hidden taxes right there on the label so everybody can see where their money is going. We work hard, we pay payroll taxes, then we get to go to the store and pay excise taxes which are hidden, hidden at the pump, hidden on your cigarettes, Kool-Aid, everything else. And then, on top of that, we get to pay sales tax. So help us stop some of those.

And then now we have got the fees. The fees come along, mandatory fees. OK, these are just another tax; but no, our politician did not raise our tax but he gave us more fees that you cannot even write off on your tax return.

And one of the things I would like to see stopped is Earned Income Credit. And I know you have all heard a lot about it. But why allow a person, not putting any money into the system, to get it back? I do not know of any bank that will let you take more money out than you put in. So we could help balance the budget there a lot.

And one big question I have: I would like to know the definition of "wealthy." Everything I read says, oh, the wealthy are getting all the benefits. They are helping the rich, helping the wealthy and just killing the poor, taking everything away. So that is mainly most of my story here. And I would just love to know the meaning of "wealthy" because I seem to be in that category of all the taxes but none of the wealth. [Laughter.]

Mr. CLINGER. I think "wealthy" is in the eye of the beholder, probably. One man's wealth is somebody else's poverty. But I thank you very much for your contribution. I would tell you that in our committee we do have jurisdiction over some of the elements that you mentioned in your comments. One is the Paperwork Reduction Act which is a product of our committee which has been on the books for some time. I think that it has not been exactly vigorously implemented in many areas, and we are trying to do a better job at reducing the amount of paperwork that is imposed upon not only State and local government, but also on private businesses. Because our sense is that a lot of the paperwork that you go through costs you a lot of money and nobody ever looks at it.

Ms. COTTINGHAM. Exactly. Yeah. Well, this is just our permit we have now for air. This is just one of them. Not the water one, this is just air. Well, now we go into Title 5, so that brings us to about this thick with paperwork.

Mr. CLINGER. Yes. There has to be some measure of reason involved here. We need to be on top of what is going on in terms of the pollution and in terms of the environment. But we also have made it almost so oppressive that we are literally putting people at risk. And I hear your comments. Thank you very much.

Ms. COTTINGHAM. Thank you.

Mr. CLINGER. 6547. And next would be—on deck would be 6550.

STATEMENT OF EARNEST JOHNSON, CARRBORO, NC

Mr. JOHNSON. Hi. My name is Earnest Johnson. I am a self-employed technical writer from Carrboro, NC, and currently acting chair of the Orange County Libertarian Party.

We have heard a lot today—excuse me—a lot today about examples of downsizing in the private sector and a discussion of how they can be transferred to the government. But I would like to remind the members, and to inform them if they do not know of one, of an actual event of downsizing government. And that has to do with the state of Czechoslovakia—the Nation of Czechoslovakia. With the breakup of the——

Mr. CLINGER. I am sorry, what—the Nation of what?

Mr. JOHNSON. Czechoslovakia.

Mr. CLINGER. Oh, Czechoslovakia.

Mr. JOHNSON. With the breakup of the Eastern Bloc and the Soviet Union, a lot of governments there had to face the decision to deal with the remnants of failed governments and failed economies. Many of the governments—Russia, Hungary, Poland—chose to take very timid ways of going about this. They looked at how to reinvent their governments to do what they wanted to do, rather than get rid of the government.

Czechoslovakia took the approach of simply getting rid of it. They privatized at a very rapid pace. They did not take a tentative approach once they decided that a government entity needed to be gotten rid of; they did it. They simply put it into the private sector. They did not try to contract out, they did not try to make it more competitive or to make it more efficient, they just transferred it.

And I think the message that I would like to bring to this meeting is that we should approach the problem with no preconceptions that these are things that the government should be doing or that, you know, if the government does not do them nobody else will. But to ask the question, you know, first of all does the government need to be doing this. And if you assume that the government does not need to be doing it, how are—are there ways that the private sector can do them, and to buildupon that and then base your plan on that type. Thank you.

Mr. CLINGER. Thank you very much. Any comment?

[No response.]

Mr. CLINGER. Thank you very much. 6550? And on deck is 6555.

STATEMENT OF ELIZABETH BOHL, YADKIN COUNTY, NC

Ms. BOHL. My name is Elizabeth Bohl. Thank you very much for allowing me to speak to you today. I support you and commend you for working on downsizing the Department of Energy, and HUD, and Education. I provided an editorial supporting the doing away with the Department of Education which I hope you can read.

HUD has not worked for more than 25 years. I grew up in Detroit. HUD does not work in Detroit. Today, we heard some testimony that it works real well here in North Carolina, so maybe you need to look at doing away with it where it does not work but keeping it where it does.

I have what I call a laundry list of ideas I would like to briefly present. I am a member of United We Stand, America; North Carolina Taxpayers United; League of Women Voters; and For The Peo-

ple. I am a licensed dietician nutritionist employed at the Yadkin County Health Department. I support all the positions of United We Stand, but wish to add some ideas of my own.

Downsize the DOT. North Carolina citizens pay more to the Federal Government in gas tax than we get back. Let New York and Illinois pay for their own roads and bridges by block granting or just letting the States collect the gas tax to maintain their own roads. All of the States should want good roads and bridges for tourism and to attract industry. If we had term limits we would not have to pave the other half of West Virginia. [Laughter.]

Charlotte roads improved markedly when Mrs. Myrick was the mayor over what they had been before, and I am sorry she is not here to hear me say that, but they did.

Eliminate the Office of the Surgeon General and its staff.

Members of Congress are entitled to a paycheck or a retirement check, but not both. No businesses I know of pays anyone both. Also eliminate your separate healthcare system. Why is not the system the rest of us have good enough for all of you.

Medicare, Medicaid, food stamps, welfare, and WIC—one of the programs I work in—should all be block granted to the States. But please leave WIC as a separate program. It has experimentally been combined with food stamps and it does not work. I am a licensed nutritionist, and the people in the food stamp program do not know enough about nutrition to administer the WIC Program. And it has been tried and it does not work so please do not do it that way. Leave us as—leave these things separate. Oh, I am not talking fast enough.

Also things like the school lunch program and the senior nutrition program should be separate and not combined.

The Federal Government seems to be unable to catch even Reader's Digest identified cheats. I gave a copy that I hope the chairman will share with you. I have discussed this with my State representative; she confirms the position the States could do a better job with many of these programs. It would be easier and people would care more about catching cheaters closer to home. The programs could not suit the needs of—the programs could better suit the needs of the population.

I also gave you my handout about counterfeit money which is a big concern to me.

Let the States work out reciprocal agreements. I am against regional anything; all it does is add a layer of government. That is basically why Bill Clinton's healthcare plan did not work.

Social Security should have no cap on contributions; currently about $63,000, I believe. I think that wealthy people are better able to contribute more to the system. Social Security should be separate from the Federal budget; no more borrowing.

The IRS. I support a flat tax, preferably that could be documented on a postcard. Hall and Rabushka, in their book—and I documented where you can get it from there—document the benefits of eliminating taxes on interest dividends, decreasing or eliminating the tax on capital gains, raising the standard deduction and personal exemptions, and the pros and cons of eliminating the mortgage interest deduction and charitable contributions.

Mr. CLINGER. Ms. Bohl, I am going to have to ask you to——

Ms. BOHL. All right. I will let you read that.

Mr. CLINGER. Thank you. And we will make this part of our record. We thank you very much for——

Ms. BOHL. I really would like to say a couple of things about some of the things other people talked about today.

Mr. CLINGER. I am afraid we really have to move on. Thank you anyway.

We have about—time for about one more. 6555? And, let us see, that is all we have got left. 645?

Mr. DAVIS. Let him get up here since he is——

Mr. CLINGER. You are on, sir.

STATEMENT OF JOE MILLER, CHARLOTTE, NC

Mr. MILLER. My name is Joe Miller. I live in Charlotte, NC. I am a retired executive of a listed stock exchange—American Stock Exchange company.

I have two parts to my thing. The first one I titled, "When are taxpayers and voters going to stop the Gravy Train?" Now, first of all, you would either agree with us—with me or not that some Senators, some congressional representatives and some bureaucrats are on a Gravy Train. We believe they are. Here is our evidence.

Gary L. Bower, president of the Family Research Council, put out a memo dated October the 10th of this year which said the following about retirement benefits of Senators, after discussing Senator Nunn's announcement that he will not run again. I quote him: "By the way, with all these Washington politicians walking away from the battle it is interesting to look at the retirement benefits they will receive courtesy of the taxpayer. For example, Senator Nunn will get estimated lifetime benefits of $2.8 million; Senator Bradley $2.6 million; Senator Hank Brown $2.6 million. And on and on the list goes. Look for Ross Perot to aggressively raise the issue of fat politician pensions at a time of belt tightening for the rest of the country as part of his populace theme." And that ends his quote.

But these fat retirement benefits are not only for Congress. Our own city manager who spoke to you here earlier today has an estimated pension, if he lives out or his wife live out their actuarial life, that pension is worth $2.5 million. These exorbitant retirement benefits are going to go on until either we voters make it absolutely clear to all of you elected officials that we want the practice to stop. That is that.

On the UMPTA program that governs our mass transit, Mr. Lawson spoke about that earlier today. Charlotte's budget for transportation is about $24 million a year. We get about $8 million from the fare box, say $8½ million, and $1.1 from the Federal Government. So let us say the sum of those two items are $10 million. That means the taxpayers are paying $14 million for our transportation in this city. That represents about 12½ percent of the total property tax that citizens of Charlotte pay. And yet we cannot run our own Transportation Department; you, the Federal Government, runs it. You tell us that we have to be—have to have a unionized transportation system, you tell us that if we privatize it we have to pay all the employees for 6 years after we privatize it. That is in the UMPTA Bill.

Mr. DAVIS. That is Section 13.

Mr. MILLER. I beg your pardon?

Mr. DAVIS. That is Section 13. So you did not quite say that, but that is what it could lead to. We just have a very close vote in the House floor on that. We almost——

Mr. MILLER. I did not—was not aware of that.

Mr. DAVIS. Yes.

Mr. MILLER. Beyond that here is a shocking fact. In this city bus drivers with 3 years experience, until just a short time ago, earned more than a police officer with 3 years experience. Now, I do not have anything against bus drivers. But it seems to me it is wrong to pay a bus driver more than you pay a police officer.

Also I would like to challenge Chairman Clinger for something he said. You were speaking with Ms. Garrett, and you were speaking about block-granting money back to her. And you said, "Well, how can we trust you?"

Mr. CLINGER. No, I said, "Can we trust you?"

Mr. MILLER. Oh, "Can we trust you?"

Mr. CLINGER. Yes.

Mr. MILLER. OK. Well, I will put it this way: Can we trust you, the Federal Government? You are building today—rebuilding Earl Village, not but a few blocks from here, which is a public housing development. Before you started rebuilding it had 420 units. It is on about 39 acres of land. The land is worth about $30 million, and you are spending $41 million to rebuild it. For that $41 million plus the $30 million in land you are going to go down from about 420 units down to 240 units. If you divide $71 million by 240 units, they cost $290,000 apiece. Now, can we trust you to spend $290,000 apiece? Thank you very much.

Mr. CLINGER. Yes, that is a very impressive point. [Applause]

Very effective point.

Yes, Mr. Bass.

Mr. BASS. Thank you very much, Mr. Chairman. I think for the record we should clarify the pension issue. The reason why those Senators are receiving large pensions is because they participated in a program that was eliminated in 1984. I do not think anybody is suggesting that any Federal employee or any employee, for that matter, who is already entitled to a benefit that was accrued 15 years earlier have that benefit removed arbitrarily. You just simply would not do that.

I would also point out to you that Members of Congress are now in the Federal Retirement System which is essentially identical, with one exception, to the retirement system that all the rest of the Federal employees have. Congress also pays Social Security, and they have an employee co-payment provision for their Federal health benefits, which by the way, in my situation, are not as good as those which were provided to me in my company which I worked in prior to being in Congress.

Furthermore, in the reconciliation package which is under consideration at the end of next week, the accrual rate difference in retirement which existed, which is the only difference between Members of Congress and the other Federal employees, is going to be set at the same standard as Federal employees' rates.

Mr. SPRATT. Or changed by this committee.

Mr. BASS. Yes, exactly, and it was this committee that made the change. So, I know that it is tempting sometimes to attack the big pensions that Members of Congress get, but sometimes there are justifications for these. And in fact this Congress—and I would point out in a bipartisan fashion the Congress that was controlled by the other party in the mid-1980's changed that system a long time ago, and it has really been much more equitable since then.

Mr. CLINGER. Yes. We are going to have to wrap it up.

Mr. GUTKNECHT. OK. Mr. Chairman, just briefly on the congressional pensions, this is—I have been doing some work on this and I have a bill, and Senator Hank Brown is going to introduce it in the Senate I think next week, which would limit congressional pension accrual to 12 years of service. Now, you do have to do that prospectively. There was a case, and I think it may have gone all the way to the Supreme Court, called the Christianson case, which says you cannot retroactively take away pension benefits of people that have accrued.

But just so everyone understands that if that bill were to pass at today's congressional salary levels, the maximum pension that a Member of Congress or Senator could receive would be about $27,000. Now, that is still a lot of money, I understand for people who are working very hard in Charlotte or in Minneapolis, MN, making $27,000 a year; but it is a long ways from the pensions you read about of $100, $120, $130,000 a year that many of those Members accrued under the old formula. So——

Mr. MILLER. Thank you.

Mr. CLINGER. Thank you very much. Obviously you hit a raw nerve with that. And we did, indeed.

Before we close I want to, on behalf of the full committee, thank a number of people: Roberta Avery, Melvin Caldwell, and Bill Gurrant of the Mecklenburg Government Center for providing such a marvelous facility in which to hold this hearing. And to J.T. Taylor and Stan Campbell of Representative Myrick's staff for their very hard work in preparing for our visit today.

I also want to express my appreciation to the witnesses who have appeared before us for the very constructive and helpful testimony that they gave. And to all of you who are here now and those who have left that participated in our open mic session. I think we feel that we have really accomplished a great deal in coming here to Charlotte today. We have enjoyed the visit very, very much, and I can assure you that the testimony we have received today will be taken into consideration as we move forward.

So with that, I again thank you all for coming. I thank my colleagues also for joining in this hearing. And with that the committee stands adjourned.

[Whereupon, at 2 p.m. the committee was adjourned.]

○